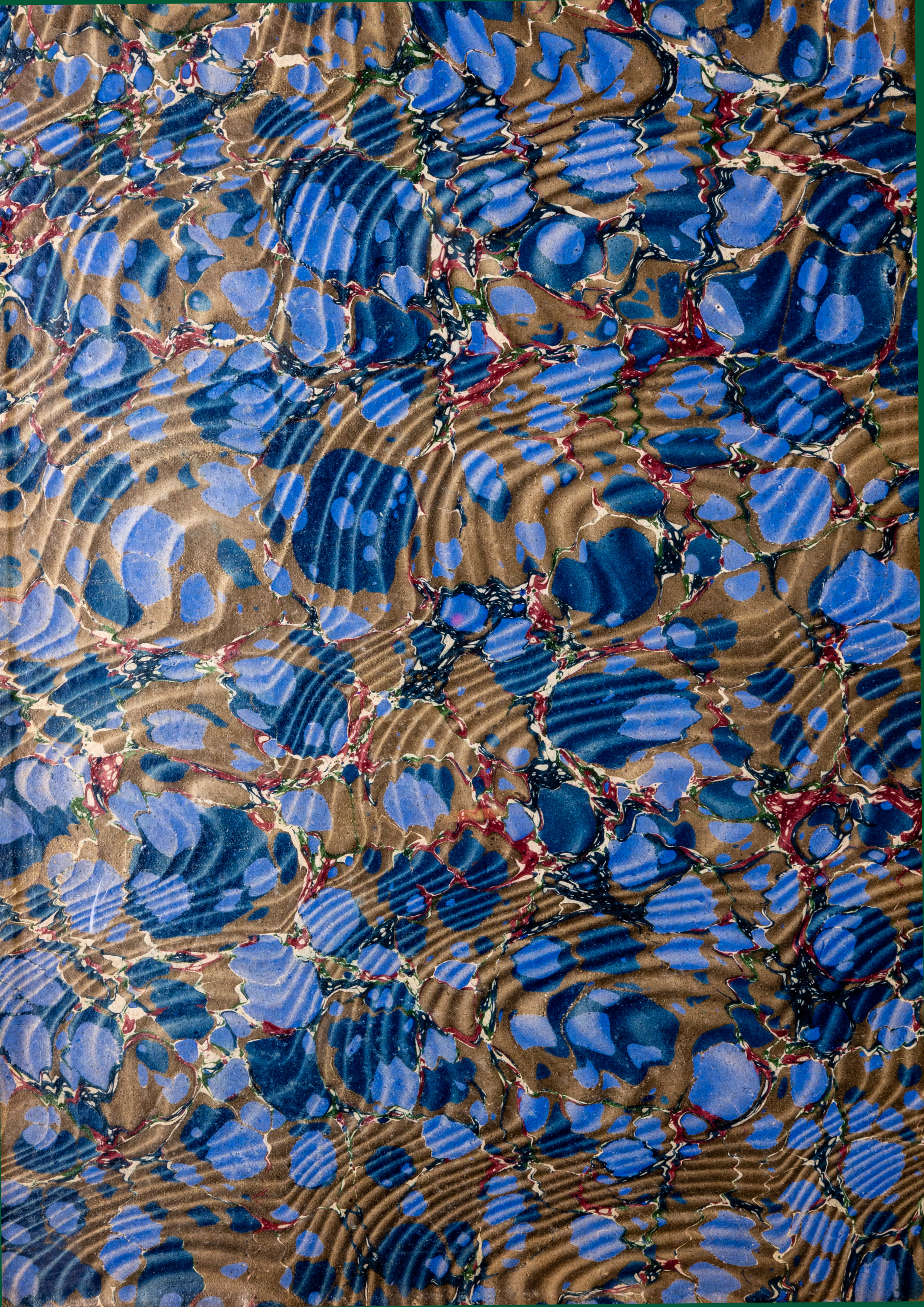

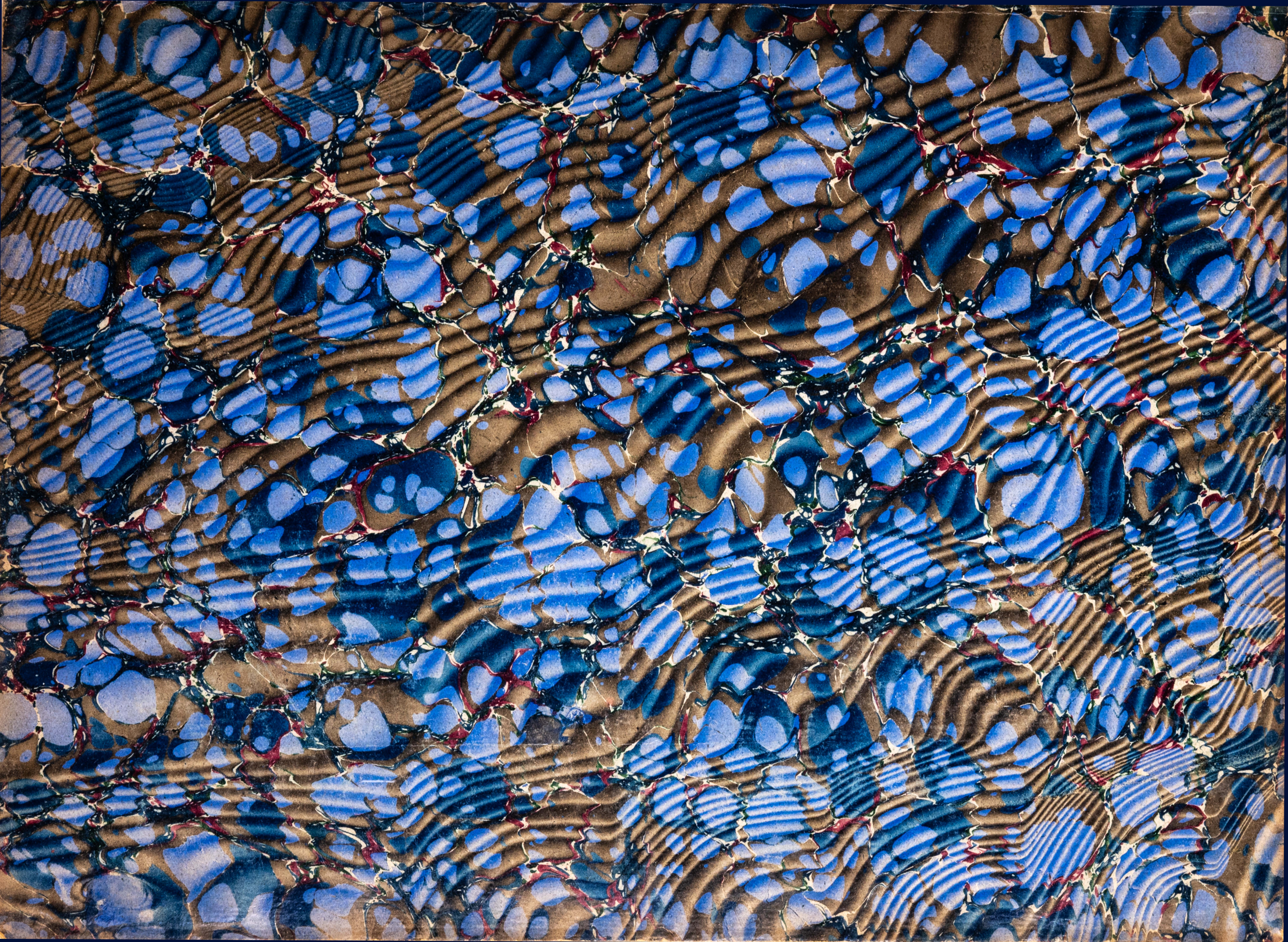

MODERN MACHINE-SHOP PRACTICE

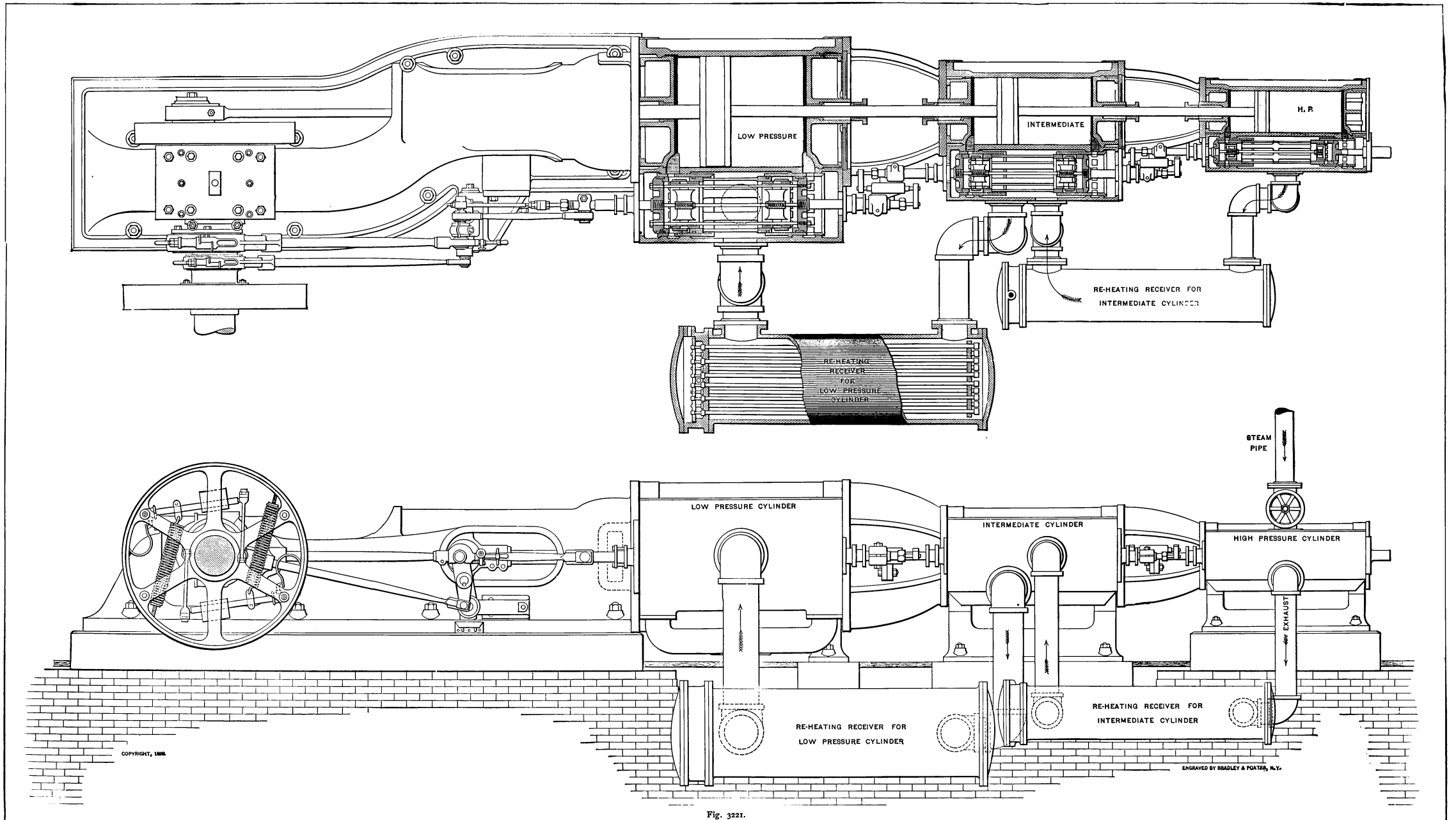

Fig. 3221.

BUCKEYE ENGINE.

MODERN

MACHINE-SHOP PRACTICE

BY

JOSHUA ROSE, M.E.

ILLUSTRATED WITH NEARLY 4000 ENGRAVINGS

THIRD EDITION

FULLY REVISED AND WITH IMPORTANT ADDITIONS

VOLUME II.

NEW YORK
CHARLES SCRIBNER'S SONS
1916

COPYRIGHT, 1887, 1888, 1891, 1899,
BY CHARLES SCRIBNER'S SONS

CONTENTS.

VOLUME II.

CHAPTER XXII.

MILLING MACHINERY AND MILLING TOOLS.

PAGE

The Milling Machine; Advantages possessed by 1
The hand milling machine 1
Power milling machine 2
Plain milling machine 2
Pratt & Whitney milling machine 2
Brown & Sharpe universal milling machine ..... 2 to 6
Attachments for milling machines 6, 7
Van Norman duplex milling machines 7
Vertical two-spindle open side milling machine 8
Vertical single-spindle open side milling machine 8
Duplex milling machine for heavy work 8
Hilles & Jones Co.'s vertical milling machine 8
Bement, Miles & Co.'s vertical milling machine 8
Kempsmith's milling machine 8
Side centre for foot stock 8
Pratt & Whitney Co.'s machines 9
Face plate for work 9
Beaman & Smith's duplex machine 9
Sweet's traversing milling machine 9
Strength of bed and resistance of strain 9
Driving disc 9
Adaptations of the machine 9
Open side milling machine 10
Milling machine with vertical spindle 10
The Brainard Milling Machine 10
The various attachments of 10
The rotary vise 10
Universal head for gear cutting 11
The head for cutting spirals 12
The cam cutting attachment 12
The Lipe Universal Milling Machine 12
The feed motions 13
The index head of the adjustable centre rest 14
The Universal Milling Machine for heavy work 15
Construction of the driving gear and feed motion 15
Pratt & Whitney's double spindle milling machine 16
Milling Cutters or Mills ..... 16 to 24
Cutters with spiral teeth 17
Table of sizes of Brown and Sharpe standard cutters 17
Table of standard sizes of Brainard cutters 17
Face cutters 17
Twin cutters and right and left hand cutters 18
Advantages and disadvantages of face cutters 18
Angular cutters 19
The Brown and Sharpe patent cutters 19
Shank cutters 19
The direction of the feed for shank cutters 20
Applications of sizes 21
Fly cutters 21
Different methods of making fly cutters 21
Circular cutters, and holders for fly cutters 22
Matched cutters; methods of matching cutters 23
Gang or composite cutters; cutters with inserted teeth 24
Cutter Arbors 25
Milling ..... 25 to 30
Comparison of the advantages of end milling, face milling, and twin milling 25
The length of feed in face milling 26
Cutting grooves in cylindrical work 27
The crowding of grooving cutters and how to avoid it 27
The direction of the feed in cutting spiral grooves 27
Setting angular grooving cutters 28
Cutting right and left hand grooves 29
Fluting twist drills 29
Finding the angle of the cutter in cutting spiral grooves 29
Producing different shaped grooves with the same cutter 29, 30
Holding work on the milling machine; milling taper work 30
Chucks for Milling Machines 31

PAGE

Vertical Milling Machine 31
Profiling Machine 31, 32
Grinding Machine, for milling cutters ..... 32 to 37
Fixture for grinding parallel cutters 32
Errors in grinding milling cutters 32
Grinding thin cutters 33
Grinding taper cutters 33
Fixture for grinding taper work 33
Fixture for taper cutters and for face cutters 34
The position of the emery wheel and clearance on the cutter 35
Grinding the teeth of spiral cutters 36
Positions of emery wheels in cutter grinding as affecting the strength of the cutting edges 36, 37

CHAPTER XXIII.

EMERY WHEELS AND GRINDING MACHINERY.

Grinding Operations; Classification of 38
The qualifications of emery wheels 38
Cements used in the manufacture of emery wheels 38
Grades of coarseness and fineness of emery wheels 38
Grades of wheels and the work they are suitable for 39
Speeds of emery wheels 39
Balancing emery wheels 39
Emery Grinding Machines 40
The Sellers drill grinding machine 41
The construction of the drill holding chuck 41
Varying the drill position to suit the diameter of the drill 41
Errors of construction in ordinary drill grinding machines 41
Maintaining equal clearance from end to end of the cutting edge upon all sizes of drills 41, 42, 43, 44
Attachment for thinning the points of large twist drills 44
The front rake of twist drills 44
Cutter Grinding machine 45
Method of using 46
Grade of emery wheel 47
Drawing temper of cutter teeth 47
Cautions against accidents 47
Cleaning emery wheel 47
Grinding formed cutter 47
Universal Cutter and Reamer grinder 48
Construction of 48
Method of using 48
Illustrations of work done on ..... 48 to 50
Compound Swivel Head 51
Adaptation to fine-toothed mills or cutters 51
Cautions about clearance 51
Formed Cutter grinding attachment 52

CHAPTER XXIV.

GEAR CUTTING MACHINES.

Gear Cutters—The Brainard Automatic 53
Plan view of the mechanism 53
Method of operating the cutter slide 53
The arrangement of the positive feed shipping motion 53
Arrangement and construction of the dividing mechanism 53
The Brainard half automatic gear cutting machine 54
Gear cutting engine with vertical cutter spindle 54
Gear planing machine 54
Piat's French gear cutting machine ..... 54 to 59
Gould & Eberhardt's rack cutting machines 59
Gould & Eberhardt's automatic gear cutter 59
Brown & Sharpe's spur-gear cutting machine 59
General construction 60
Importance of cleanliness and lubrication 60
Adjustments of cutter spindle, feed screw, index worm and indicator 60
Placing the work 60

PAGE

Use of indicator ... 60
Cutting several teeth at once ... 60
Brown & Sharpe's automatic gear cutter ... 61
Bevel Gears, Designing and cutting ... 61
Method of finding diameters of ... 61
Axles at right angles ... 61
Axles not at right angles ... 61
Forms and sizes of teeth ... 62
Cutting teeth ... 62
Choice of cutters ... 62
Rounding bevel gear teeth ... 62
Cutting twice around ... 62
Order for cutting bevel gears ... 63
Operation of cutting teeth ... 63
Cautions as to centring the cut ... 63
Cutting three times around ... 63
Variations in blanks ... 63
Approximate methods of cutting teeth ... 64
Gear Planers ... 64
Wearing of the tool ... 64
Worm Gears ... 64
Circular pitch ... 64
Hobs and hobbing ... 64
Rules for sizing worm wheel blanks ... 65
Spiral Gears ... 65
Calculations for pitch of spirals ... 66
Calculations for circumference of spirals ... 66
Use of cutters ... 66
Curious facts regarding spiral gears ... 67
Gould & Eberhardt's "Victoria" gear cutters ... 67
New type automatic gear cutter ... 67
Fellows' gear shaping machine ... 67
Principle of the machine ... 67
Its operation ... 67
Cutter motion ... 67
Feed motion ... 67
Method of freeing cutter from work ... 68
Method of holding work ... 68
Colburn Keyway-cutting Machine ... 68
Detailed description ... 69
Another form ... 70
Portable Key-seating Machine ... 70
Morton Keyway-cutting Machine ... 71
Patent key making attachment ... 71
Colter and Key-seat Drilling Machine ... 71

CHAPTER XXV.

VISE WORK.

Definition of Vise Work ... 72
Machinists' hand hammers ... 72
Shapes of hammer eyes ... 72
The proper method of putting handles in ... 72
Paning or pening hammers ... 72
Pening or paning ... 72
Applications of pening to straighten work or refit it ... 72
Riveting crank pins ... 73
Chisels ... 73
Forms of bar steel for chisels ... 73
The widths and thicknesses of the cutting ends of ... 74
Angles of the cutting edges of ... 74
Shapes of the cutting edges of ... 74
Chisel holders ... 74
Cape or cross-cut ... 74
Round nosed ... 75
The cow-mouthed ... 75
Curved or oil groove ... 76
The diamond point chisel ... 76
Applications of machinists' chisels ... 76
The carpenter's chisel ... 77
The angle of presentation of chisels ... 77
Plane Blades ... 77
The form of, necessary to produce a given shape of moulding ... 77
Finding the shape of knives, plane blades, or cutters necessary to produce given shapes upon the work ... 78 to 83
Scale for marking out the necessary shapes of moulding knives ... 83
Instruments for ... 84
Files ... 85
Shapes of file teeth ... 85
The cut of files ... 85
Sizes and kinds of flat files ... 86
Groubet files ... 87
Rasps, the kinds and cut of ... 88
The names of files ... 88, 89
Round, half-round, and three-square files ... 90
Knife files, cross files, reaper files, tumbler files ... 91
The selection of files ... 91
Putting handles on files ... 92
Instruction on holding files ... 92
Slim files ... 92

PAGE

The warping of files ... 93
Using bent files ... 93
Cross filing ... 93
Draw filing ... 94
Cleaning files ... 94
Filing out round corners ... 95
Using round files ... 95
Files for soft metals ... 95
Resharpening files ... 95
The Sand Blast process ... 96
Red Marking for vise work ... 96
Hack Saw ... 97
Screw Drivers and their proper shape ... 97
Scrapers for true surfaces ... 97
Angles for the facets of scrapers ... 97
Various forms of scrapers ... 97
Reamers ... 98
The spacing of reamer teeth ... 98
Odd and even numbers of reamer teeth ... 98
Adjustable reamers ... 98
Taper reamers ... 99
Reamers for framing ... 99
Half-round reamers ... 99
Square reamers ... 99

CHAPTER XXVI.

VISE WORK (Continued).

Examples in Vise Work ... 100 to 113
The use of chisels ... 100
File cutting ... 100
Cutting key seats ... 101
Sinking feathers in shafts ... 101
Methods of securing feathers ... 102
Filing up a double eye or knuckle joint ... 103
Filing pins ... 103
Blocks for filing pins ... 104
Hand vise ... 104
Filing bolt heads and nuts ... 104, 105
Making outside calipers ... 105, 106
Fitting keys ... 107
Cutting keyways by hand ... 108
Cutting out keyways by drifts ... 109
Forms of drifts ... 109
Methods of using drifts ... 109
Templates ... 110
Making male and female templates ... 110 to 112

CHAPTER XXVII.

VISE WORK (Continued).

Examples in Vise Work ... 113 to 127
The various form of connecting rods ... 113
Solid ended connecting rods ... 113
Clip ended connecting rod ... 114
Strap ended connecting rod ... 115
Double gibbed connecting rod ... 115
Locomotive connecting rod ... 115
Bolted connecting rod straps ... 115
Marine engine connecting rod ... 116
Tapered connecting rod ends and their advantages ... 117
Stepped connecting rod straps and their advantages ... 117
Fitting up connecting rods ... 117, 119
Welding up stub ends of connecting rods ... 118
Aligning welded connecting rods ... 118
Fitting on connecting rod straps ... 119
Filing out connecting rod keyways ... 119
Fitting the keys and gibs ... 119
Fitting connecting rod brasses to their straps ... 120, 122
The joint faces of connecting rod straps ... 121
Disadvantages of joints left open to take up the wear ... 121
Obviating this disadvantage ... 121
Marking the lengths of connecting rods ... 122
Fitting up a fork end connecting rod ... 122
Aligning fork end connecting rods ... 123
Repairing connecting rods ... 124
Setting connecting rod brasses together ... 125
Lining up connecting rod brasses ... 126
Adjusting the lengths of connecting rods ... 126
Setting up the keys of connecting rods ... 126
Shapes of the crowns of brasses ... 127
Fitting up a link motion ... 127
Templates for filing the link slot ... 127
Case-hardening ... 128 to 133
Sheehan's case-hardening process ... 128
Preparing work for ... 129
Setting work after ... 129
Fitting brasses to pillow blocks or axle boxes ... 130

PAGE

Bedding brasses ... 132
The proper shape for the patterns of brasses ... 132
Originating a True Plane ... 133
Finding which of three surfaces is the nearest to a true plane ... 133
Methods of testing the surfaces ... 134
A new process of originating surface plates ... 134
The deflection of surface plates ... 134
The Friction of Plane Surfaces ... 135
Oiling True Surfaces ... 135

CHAPTER XXVIII.

ERECTING.

Spirit-level ... 136
Plumb-level ... 136
Joints ... 136 to 141
Filing or making joints ... 137
Ground joints ... 137
Scraped joints ... 137
Cylinder covered joints ... 137
Making a scraped joint with the studs in their places ... 138
Joints for rough surfaces ... 138
Gauze wire joints ... 138
Water joints ... 138
Joints to withstand great heat ... 138
Rubber joints ... 139
Boiler fitting joints ... 139
Easily removable joints ... 140
Rust or caulked joints; caulking tools ... 141
Thimble joints ... 141
Expansion joint ... 141
Pipes, Cocks and Plugs ... 141 to 145
Pipe cutters ... 141
Pipe vises ... 141
Pipe tongs ... 143
Erecting pipe work ... 144
Refitting leaky cocks and plugs ... 144
Grinding cocks and plugs ... 145
Boxes and Brasses ... 145 to 149
Fitting brasses to their journals ... 145
Various forms of bearings and brasses or boxes ... 147
Locomotive axle boxes ... 148
Lead lined brasses ... 148
Open brasses ... 149
Lubrication ... 149 to 154
Examples of oil cavities and oil grooves for brasses ... 150
Qualities of lubricants ... 151
Testing lubricants ... 151
Best method of using thin oils ... 152
The influence of the atmosphere on oils ... 153
Longevity of lubricants ... 153
Testing oils for salts and acids ... 153
Swiss watchmakers' oil tests ... 153
The blotting paper oil test ... 154
Friction and Wear ... 154
Morin's experiments on ... 154
Order of the value of metals to resist wear ... 154
White metal or babbitt metal lined boxes ... 155
Methods of babbitting boxes ... 156
The pressure on journals ... 156
Cranks ... 156
Placing at right angles ... 156, 157
Engine Cylinders ... 158 to 161
Fitting ... 158
Setting ... 159
Reboring cylinders in their places ... 160
Scraping out cylinder ends ... 161

CHAPTER XXIX.

ERECTING ENGINES AND MACHINERY.

Engine Guide Bars ... 162
Setting ... 162
The spring of ... 162
Testing ... 163
Setting by stretched lines ... 163
Heating and Knocking of Engines ... 164
The ordinary causes of ... 164, 166
Aligning New Engines ... 166 to 171
Classification of the errors in engine alignment ... 166
Testing the alignment of the crank ... 167
Showing separately the causes of beating and pounding ... 168
Methods of discovery and determining the errors of alignment ... 169
Errors of alignment in crank pins ... 170
Methods of discovering errors of crank pin alignment ... 170
Remedying errors of crank pin alignment ... 171, 172
Slide Valves ... 173 to 175
Finding the dead centre of the crank ... 173
Taking up the lost motion when setting the valve ... 174
Measuring the valve lead ... 174
Finding the dead centre with a spirit level ... 174
Setting Eccentrics on crank shafts ... 175
Setting double eccentrics by lines ... 175
Erecting the Framework of machinery ... 176, 177
Repairing and Patching broken frames ... 178
Erecting an Iron Planer ... 179
Foundations for an iron planer ... 180
Fitting up and erecting a lathe ... 181
Testing Lathes ... 181
Instruments for testing lathes ... 182
Testing lathe carriages ... 183
Erecting Line Shafting ... 184 to 186

CHAPTER XXX.

LINE SHAFTING.

Line Shafting ... 187 to 190
Sizes of ... 187
Cold rolled shafting ... 187
Distance between bearings of line shafting ... 187
Tests of hot rolled and cold rolled shafting ... 188
Collars for shafting ... 189
Diameters of line shafting ... 189
The strength of line shafting ... 190
Speeds for shafting ... 190
Counter Shafts ... 191
Friction Clutches ... 192
Shafting Hangers ... 193
Various forms of ... 193
Open-sided ... 193
Wall hangers ... 194
Pillow Blocks for shafting ... 194
Couplings ... 194 to 199
For line shafts ... 194
With split sleeves ... 195
Errors in ... 196
Self-adjusting ... 196
Plate ... 196
Clamp ... 197, 198
For light shafting ... 199
Universal ... 199

CHAPTER XXXI.

PULLEYS.

Classification ... 200, 201
Wood pulleys ... 200
Solid and split pulleys ... 200
Expansion pulleys ... 200
Self-oiling pulleys ... 200
Crowned pulleys ... 201
Fastening pulleys to their shafts ... 201
Balancing pulleys ... 202
The Transmitting Power of pulleys ... 204
Size of pulleys for countershafts ... 205
Calculating the Speeds of pulleys ... 206

CHAPTER XXXII.

LEATHER BELTING.

Hides ... 207, 208
The parts of a hide used for belting ... 207
The thickness and stretch of the parts of a hide ... 207
Experiments on the strength of the parts of a hide ... 208
Single and double belts ... 208
Grain Side of Leather ... 208
Weakness of the ... 208
Why the grain side should go next to a pulley ... 208
Belts ... 209 to 217
The length of ... 209
Belt clamp ... 210
The sag of belts ... 210
Belt connection at an angle ... 211
Guide pulleys for belts ... 211
The tension and creep of belts ... 212
Methods of joining the ends of belts ... 213
Forms of belt lacings ... 214
Covers for belt lacings ... 215
Lap joints for belts ... 215
Joining thin belts ... 215
Bevelled joints for belts ... 215
Pegged belts ... 215
Belt hooks and belt screws ... 216
Angular or V-belts ... 217
The line of motion of belts ... 217

PAGE

Changing or shipping belts 217
Automatic belt replacer 218
Pull of a belt 218
The Sellers experiments on transmission of power ..... 218 to 225
Belt $5\frac{1}{2}''$ wide by $\frac{7}{32}''$ thick 219
Belt $2\frac{1}{4}''$ wide by $\frac{5}{16}''$ thick 219
Rawhide belt 4" by $\frac{9}{32}''$ 220
Double oak tanned belt 4" by $\frac{5}{16}$ 220, 221
Oak tanned belt 2" by $\frac{3}{16}$ 222
Coefficient of friction and velocity of slip 222
Torsional moment 223
Increase of tensions 224

CHAPTER XXXIII.

STEAM ENGINES.

Selection of Engines 226, 228
Relating to economy of steam 226
For variable duty 226
Reversing duty 226
Constant load 226
High speed 226
Safety 226
Relative to steam pressure 226
Relating to transmission of power 227
Relating to form 227
Vertical 227
Horizontal 227
Side crank or "side hitch" 227
Tandem 227
Coupled 227
Coupled compound tandem 227
Self-contained 228
Piston Speed 228
High speed 228
Moderate speed 228
Frictional loss 228
Automatic expansion 229
Throttle valve gears 229
Weight of fly-wheel 229
Cut-off gear 229
Determination of Power 229
N.H.P.—I.H.P.—B.H.P. 229
Throttling Engines 230
Construction of Piston 230
Slide Valves 230
D valve 230, 232
Valve action 233
Without lap 234
With lap 234, 235
Diagrams of valve motions 235, 238
Overtravel 237
Steam distribution 235, 244
Admission and cut-off 235, 244
Piston position when starting engine 238
Position of crank-pin at cut-off 239
Position of eccentrics at cut-off 240
Equalizing points of cut-off 240
Valve Lead 241
Double-ported valves 242
Allen 242
Marine engine 244
Armington Sims 244
Straight line 244
Weston 245
Balanced valves 246
Expansion valves 247
Meyers 248
Position of Cut-off Eccentric 249, 262
Engine running in one direction only 250
To equalize the points of cut-off 251, 254
Varying the points of cut-off 254, 262
At three-quarters stroke 254
At quarter stroke 256
Meyer double-ported cut-off valve 257
Multiported valve 257
Cut-off at half stroke 258
At other points 259
Expansion valve in a separate chamber 260
Wire drawing of steam 261
Limits of the range of cut-off 261
Preventing wire drawing of steam 262
Economical Compression 262, 267
Theoretical expansion curves 262
Cottrill's expression 263
Compression curve 263
Relation of expansion curve 263
Steam waste 264
Free expansion 264
Shifting the compression curve 265

PAGE

Cylinder condensation 265
In compound engine 266
Varying the exhaust closing 267
Dependence upon cut-off 267
Reduction of engine friction 267
Relation to cylinder condensation 267
Governors of Steam Engines 267, 277
Knowledge of the subject 267
Qualifications of a good governor 268
Watt's governor 268
Porter's governor 268
Richardson's governor 268
Proell's governor 269
Dash pot in governor 269
Piston throttle 269
Double-beat valve 269
Experiments with governors 270, 271
Shaft governors 271
Uniformity of speed 271
Moment of spring 272
Link expansion gear 272
Controlling slide valve 273
Electrical regulation 274
Solenoid regulation 275
Spring adjustment 276
Speeder and Sawyer valve 276
Safety stop 277
Automatic Cut-off Engines 277
Reynolds-Corliss 277, 283
Valve gear 279, 282
Controlling cut-off and exhaust 280
Admission of steam 281
Cut-off by dash pot 282
Governor connection 282
Construction of the valves 282
Varying speed 283
Shaft Governors 283, 294
Principles of construction 283
Increase of engine load 284
Lead variation 284
Cut-off 285
Shifting the eccentric 285
Piston position related to eccentric position 286
Earliest cut-off 286
Steam port opening 286
Point of admission 287
Unbalanced governor weight 287
Centrifugal moment of governor weight 288
Tension of spring 289
Approximate isochronisms 290
Influence of weight of spring 291
Influence of weight of link 291
Frictional effect of valve 291
Inertia 292
A use for inertia 293
New position of fly weight 294
Variable velocity of fly weight 294
Quick action of shaft governor 294
Governing by Throttling and Expansion 295, 300
Steam consumption 295
Condensing engine 297
Non-condensing engine 298
Close governing 299
Irregularities of speed 299
Change of load 299
Simple engine 299
Compound engine 299
Triple expansion 300
Crank-shaft and throttle-valve 300
Governing Electric-Light Engines 301
By throttling 302
By cut-off 302
Single condensing engine 302
Governing Dynamo Engines for transmitting power 302
Governing Electrical Engines 302
Throttle 303
Expansion 303
Expansion and throttle 303
Comparison of methods 304
Governing Mill Engines 304
Small change of load 304
Cut-off 304
Water consumption 304
Expansion 304
Sudden changes of load 304
Ames' Iron Works, single cylinder, high speed automatic engine 304
The valve 305
The governor 306
Valve motion 307
Connecting rod 307
Adjustment of crank end 307

PAGE

The piston ... 307
Double-disk crank ... 307
Oiling system ... 307
Stearn's Mfg. Co.'s Engine ... 308, 314
Valve relief plate ... 308
Adjustment of ... 308
Sticking of ... 310
Admission and distribution of steam in valve ... 310
Double exhaust of valve ... 311
Adjustable stuffing-box ... 312
Governor ... 312
Changing weights of ... 313
Counterweights of ... 313
Separable crosshead ... 314
Construction of ... 314
Advantages of ... 314
Setting Engine Valves ... 314
Putting crank-pin on dead centre ... 315
Lost motion of parts ... 315
Correcting length of eccentric rods ... 315
Squaring the valve ... 315
Valve lead ... 316
Measuring the lead ... 316
Marking guide notches ... 316
Slip of locomotive eccentrics ... 317
Forward and backward eccentrics ... 318
Saving work ... 318
Setting Corliss' Valves ... 318
Bell crank levers ... 318
Exhaust arms ... 318
Guide marks ... 318
Adjusting wrist plate ... 318
Adjusting exhaust valves ... 319
Rocker arm ... 319
Relating valves to cranks ... 319
Cam rods ... 319
Governor balls ... 319
Cut-off adjustment ... 319
Indicator cards ... 319
Examination of previous setting ... 319
Setting Locomotive Valves (recent practice) ... 320
Negative or blind port ... 320
Negative lead in full gear ... 320
Mr. C. H. Quereau's experiments ... 320
Endorsements of results of ... 320
Practice of named railroads ... 320
Link Motions ... 321, 325
In full gear ... 321
Open and closed rod motion ... 321
To run backward ... 321
Shifting the link ... 324
Full gear forward ... 324
Full gear backward ... 324
Spring counterbalance ... 324
Link motion with one eccentric ... 324
Steam Reversing Gears ... 325, 377
Steam to assist the hand ... 325
Steam to wholly move the link ... 325
Cataract modifier ... 326
Auxiliary valve ... 327
Arrested by quadrant latch ... 327
Compound Engines ... 327, 377
Example of tandem compound ... 327
Cylinder proportions as related to compression ... 328, 336
Scepticism ... 328
Object of compound engines ... 328
Cylinder condensation ... 328
Cylinder pressure ... 328
Point of cut-off ... 329
"Drop" in cylinders ... 329
Receiver pressure ... 329
One cylinder wasteful ... 330
Low-pressure cylinder ... 330
Cylinder condensation ... 331
Wastefulness of the expansion ... 332
Free expansion losses ... 333
Highest economy ... 334
Intermediate and high-pressure cylinders ... 335
Ratios of cylinders ... 336
Unjacketed cylinders ... 336
Mean effective pressures ... 336
General conclusions ... 336
One HP. from eleven lbs. of steam per hour ... 336
High Speed Raworth compound engine ... 336, 339
Absence of slide or piston valves ... 336
Steam action on one side of each piston only ... 337
Supplementary exhaust port ... 337
"Drop" exceedingly small ... 337
Novelty of mechanical details ... 337
Course of the steam ... 338
High-pressure valve, governed ... 338

PAGE

Altering dynamo speed during run ... 338
Drainage automatic ... 338
Willans Central Valve compound (and single) engine ... 339, 348
Piston speed 500 ft. per minute ... 339
Piston valves all within the hollow piston rod ... 339
Course of the steam ... 340
Run as single, double, or triple ... 340
Water swept down by exhaust steam ... 340
All moving parts in constant compression ... 340
Compensating air cushion ... 344
Internal relief valves ... 344
Relief cocks ... 344
Drain cocks ... 344
One "sight-feed" lubricator for whole engine ... 344
To take the engine to pieces ... 345
To examine the pistons ... 345
To examine the crank-shaft and bearings ... 345
The crank-pin brasses ... 345
Working at less than normal load ... 345
Centrifugal governor ... 345
A multiported throttle bush ... 346
Revolving parts accessible ... 346
Action of ... 346
Variable expansion gear ... 346
Oblique trunk ports ... 346
The cut-off sleeve ... 346
Action of ... 347
Instructions to the Engineer ... 347
Examination of governor ... 347
Trying cut-off sleeves and hand gear ... 347
Testing the relay cylinder ... 347
Examining the controlling valve ... 347
Adjusting the throttle valve ... 347
Racing and hunting ... 347
Testing the cut-off ... 347
Adjusting the controlling valve ... 347
Connecting auxiliary cylinder ... 348
Steam-pipe pressure ... 348
Governor adjustment ... 348
Springs ... 348
Ball loading ... 348
Gland packing ... 348
Improper speed ... 348
Balls too light ... 348
Steam pressure too high ... 348
Full speed too low ... 348
Uncertain speed ... 348
Speed too high ... 348
Throttle valve not to be screwed up ... 348
Straight Line engine (not compound) ... 348, 349
Triple-pointed support for stability ... 348
All strains go in straight lines ... 348
Single-ball governor, shot loaded ... 348
Great centrifugal force ... 348
Lubricating pin ... 349
Changing ball load ... 349
Valve motion ... 349
Position of eccentric plate ... 349
Long valve rod slides ... 349
Attachment of valve to slide rod ... 349
Faulty cut-off and compression neutralized ... 349
Thin plate valve ... 349
Relieved of pressure ... 349
Wear does not cause leak ... 349
Ample port openings ... 349
Pop piston for automatic water clearance ... 349
Limited expansion packing rings ... 349
Piston-rod packing ... 349
Cross-head guide adjustable for wear ... 349
Allis Engine, quadruple (Columbian Exposition, 1893) ... 351, 355
Arranged as a pair of compound engines ... 351
Course of the steam ... 351
Steam-pipe couplings ... 351
Valve motion ... 353
Addition to usual Corliss motion ... 353
Cut-off eccentric ... 353
Hood travel of knock-off cam ... 353
Course of steam beyond first cylinder ... 353
For triple expansion ... 355
For quadruple expansion ... 355
Receivers ... 355
Condensers ... 355
Steam jacketing ... 355
Valve gear ... 355
Pumping Engine, triple expansion (Washington, D. C.) ... 355, 366
Driving double-acting horizontal pumps ... 355
Steam-jacketed cylinders ... 355
Course of the steam ... 355
Feed pump, steam supply ... 355
Circulating pump, steam supply ... 355
Heating the receivers and cylinder jackets ... 355

PAGE

Condensation in heating circuits 357
Cylinder poppet valves 357
Receivers under cylinders 357
Shaft in two sections 358
Valve gear 358
All lay shafts on high-pressure side 358
High-pressure cut-off, special 358
High speed of 359
Connection of pump plungers 359
Circulating and jacket-pump supplies 359
By-pass water supply valve 359
Jacket action 360
Cylinder construction and support 360
Minor details of construction 360
Speed change from 10 to 45 per minute 360
Friction disks drive the regulator 360, 361
Pump chambers 363
Pump valves and their cages 363
Auxiliary pumping engine 363
Air pump 363
Circulating pump 363
Jacket draining pump 363
Feed water 363
Surface condenser 364
Air compressor 364
No condensation in receivers 364
Leading dimensions 364
Table of coal consumption 364
Trial test (16 hours' run) 365, 366
Buckeye Engine Valve Gear and regulator 366, 374
Cut-off eccentric moves around on shaft 366
The main valve 366
The cut-off valve 367
Course of the steam 367
Pressure of main valve on its seat 367, 369
Automatic water discharge from main chamber 369
Gravity seating of cut-off valve 369
Valve operating mechanism 369
Cut-off spindle inside main spindle 370
Actuating parts 371
Throw of eccentrics 371
Latest point of cut-off 371
Constant travel of main valve 372
Diagram of port openings at ⅝-stroke 372
Ditto at ¼-stroke 372
Speed regulator 372
Valve travel 373
Auxiliary regulator springs 373
Ratio of regulator forces 373
Centripetal action 374
Auxiliary spring action 374
Triple Expansion (Columbian Exposition) 376
Recent improvement (frontispiece) 376
Three sets of valves, by one pair of eccentrics 376
Piston valves, cut-off inside of main 376
Reheater 376
Ball Engine, centre crank, single and compound 376
Construction of slide valves 376
Access to glands 376
Proell Valve with Corliss cut-off 376
Peache's High-Speed compound engine 376
"Controlling cylinder" 376
Alternate compression and expansion 376
Heating effect 377
Distribution of steam 377
No eccentrics 377
Crank shaft not in line with cylinders 377
Other details 377
Six hours' test run 377
McIntosh Seymour tandem compound 377
Gridiron crosswise valves 377
Powerful shaft governor 377
Governor dash pots 377
Removable shell shaft bearings, hollow 377
Breakdowns of stationary steam engines 377
1,000 breakdowns classified 378
Valve and valve gear breaks 378
Best attachment for slide valve 378
Provision for examination of valves 378
Strips of brass on valve edges 379
Breaks in spur drivers 379
Bouncing of ropes or belts 379
Powerful flywheel 379
Vibration 379
Segmental gear 380
Spur rim on arms of flywheel 380
Contact of spur teeth 380
Proportions of spur teeth 380
Number of spur teeth 380
Massive pedestals 380
Chipping the teeth 380

PAGE

Air-pump motion breakages 380
Cross-heads too weak 380
Neglect in care 381
Cotters and cotter holes 381
Trunk motions 381
Attachment of buckets to rods 381

CHAPTER XXXIV.

STEAM BOILERS.

Strength of Boiler Shells 382
Strength of Boiler Plate 383
Explanation of pressure in steam boilers 383
Boiler Joints or Seams ..... 383 to 389
Forms of rivet joints 383
Single riveted lap joint 383
Double riveted lap joint 384
Single riveted butt joint with straps 384
Double riveted butt joint with straps zigzag riveted 384
Triple riveted lap joint zigzag riveted 384
Lap joint with covering plate 384
Double riveted lap joint chain riveted 385
Double riveted butt joints with double straps 385
Treble riveted butt joint with double straps 385, 386
Rules for spacing the rivets in boiler seams 385
Rule for finding diagonal pitch of riveted joints 385
High percentage joint 385
Rivets unevenly pitched 386
Rule for calculating the percentage strength of joint with unevenly pitched rivets 386
Strength of circumferential seams of stationary engine boilers 386, 387
Table of additions to be made to the factor of safety for various constructions of riveted joints 387
Table of diameter of rivets for single riveted lap joints 388
Rule for making rivet and plate area equal 388
Table of rivet diameter and pitch for single riveted lap joints 388
Rule for finding the pitch for double, diagonal riveted lap joints 388
Example in the use of rule for diagonal pitch of rivets 388
Rule for finding distance V where the diagonal pitch has been found 389
Comparing chain with zigzag riveted joints 389
Interior of Boilers ..... 390 to 396
The internally fired flue boiler 390, 391
Boiler with Field tubes 391
Vertical water tube boiler 392
Construction of field tubes 392
Arrangement of field tubes 392
Vertical boilers with external uptakes 393
Horizontal return tubular boiler 393, 394
Construction of horizontal return tubular boiler 394, 395
Various arrangements of tubes in boilers 396
Setting Boilers 396, 398
Ground plan of brickwork 397
Setting full arch front boilers 397
Table of measurements for setting tubular stationary boilers with full arch front 398
Table of measurements for setting stationary boilers with half arch front 398
The Evaporative Efficiencies of Boilers ..... 398 to 400
Table of the pressure, temperature, and volume of steam 399
Calculating the evaporation of a boiler 400
Care and Management of Boilers ..... 400 to 403
Examining safety valves 400
Water gauge glass 400
Gauge cocks 400
Lighting boiler fires 400
The thickness of the fire for boilers 400
Managing the fire 400
Shaking grate bars 401
The slice bar 401
The hoe 401
The poker 401
The clinker hook 401
The rake 401
The quantity of water in a boiler 401
Leaving the fire for the night 401
Leaving the safety valve for the night 401
Regulating the boiler feed 401
Dirty feed water 402
Defective feed pumps 402
Scale in boilers 402
Preventing the formation of scale 402
Feed water heaters 402
Low water in boilers 402
Priming or foaming 402
The known causes of priming 402
Wastefulness of priming 402
The detection of priming 402
To prevent or stop priming 402

PAGE
Surface blow off cock or mechanical boiler cleaner 402
Blowing off a boiler 402
Blowing down a boiler 402
Washing out a boiler 403
Cleaning a boiler 403
Scaling a boiler 403
Examining a boiler 403

CHAPTER XXXV.

STEAM ENGINES.

Engine Cylinders ..... 404 to 406
The bores of 404
Sizes of 404
Wear of 404
Counterbore of 404
Clearance in 404
Lubrication of 405
The cocks of 405
Relief valves of 405
The steam ports of 405
Lagging 406
Jacketed cylinders 406
Engine Pistons 406
The speeds of 406
With releasing gears 406
With positive valve gears 406
The rings of 406
The follower 406
Testing the rings of 406
Engine Piston Rods 407
Methods of securing 407
Packing 407
Glands for 407
Engine Cross Heads 407
Engine Guide Bars 407
Engine Connecting Rods 407
Connecting-rod keys 407
Angularity of 407
The lengths of 407
Valves ..... 408 to 410
The D-valve 408
The point of cut-off 408
Period of expansion of the steam 408
Point of release of the steam 408
Point of compression of the steam 408
Lead of 408
Point of admission of the steam 408
The lip 408
Exhaust lap 408
Steam lap 408
Tracing the action of 408
Double ported valves 409
The Allen valve 409
Webb's patent valve 409
Balanced valves 409
Circular valves 409
Piston valves 410
Separate cut-off valves 410
Meyer's cut-off valves 410
Gonzenback's cut-off valve 410
Eccentrics 410
Shifting eccentrics 410
The action of 410
The angular advance of 410
Designing Slide Valves 412
Valve Motions 413
Diagram for designing 413
Link Motion 415
In full gear forward 415
In full gear backward 415
The action of 415
Setting the valves 415
Governors 416
Fly ball or throttling 416
Isochronal 416
Dancing 416
Speed of 416
Spring adjustment of 416
Sawyer's valve for 416
Speeder for 416
Starting a Slide Valve Engine 416
Crank position in 416
Examination of an Engine 417, 419
Adjusting connecting rod brasses 417
Adjusting main bearing 418
Taking a lead 418
Squaring a valve 418
Heating, to avoid 418
PAGE
Setting a valve 418
Leaky throttle valves 418
Freezing an engine, prevention of 418, 419
Pumps 419, 420
Lift and force 419
Plunger 419
Rotary 419
Single-acting 419
Double-acting 419
Displacement of 419
Principles of action of 419, 420
Speed of 420
Capacity of 420
Air chamber of 420
Belt 420

CHAPTER XXXVI.

THE LOCOMOTIVE.

Modern Freight Locomotive 421, 422
General construction 421
Course of steam from boiler to smokestack 421
Boiler feed 421
Position of parts for starting 421
Steam supply to injectors 421
Oil supply to slide valve and cylinder 421
Control of safety valve 421
Pop valve 421
Automatic air brake 422
Draught of fire 422
Sand valves 422
American Passenger Locomotive ..... 422 to 425
General construction 422
Steam reversing gear 422, 423
Link motion in full gear forward 423
In mid gear 424
In full gear backward 424
Reversing gear 424
Changing gear of link motion 425
Running forward 425
Running backward 425
Special Operations 426
Setting the slide valves 426
Getting the length of eccentric rods 426
Setting the lead 426
Backward eccentric 426
Marking sector notches 426
Setting Allen valves 427
Special Parts ..... 427 to 432
The injector ..... 427 to 429
Westinghouse automatic air brake ..... 430 to 432
Locomotive Running ..... 432 to 436
General discussion 432
Getting the engine ready 432
Laying the fire 432
Banking the fire 433
Starting up a banked fire 433
Examining the engine 433
Oiling the engine 433
Starting the engine 433
Saving fuel 434
Methods of firing 434
Examples of trips 434
Accidents on the Road 434
Knocking out cylinder heads 434
Heating of piston rods 435
Throwing off a wheel tire 435
Throwing off a driving wheel 435
Breaking a spring 435
Bursted tubes 435
Slipping eccentrics 435
Hot axle boxes 435
Breaking a lifting link 435
Breaking the saddle pin 435
Adjusting the wedges of the axle boxes 436

CHAPTER XXXVII.

THE MECHANICAL POWERS.

Power 437
Lever 437
The principles of 437
Wheels and pulleys considered as levers 437, 438
Power transmitted by gear wheels and pulleys combined 439
Horse Power 439
Calculating the horse power of an engine 439
Testing the horse power of an engine 440

PAGE

Safety Valve Calculations ... 441
Heat ... 442
Latent heat ... 442
Water ... 442
Steam ... 442
Saturated ... 442
Superheated ... 442
Expansion of ... 443
Absolute pressure of ... 443
Weight of ... 443
Volume and pressure of ... 443
Heat ... 443
Conversion of heat into work ... 443
Joule's equivalent ... 443
Mechanical equivalent of heat ... 443
Mariotte's law ... 443
Radiation of heat ... 444
Conduction of heat ... 444
Convection of heat ... 444

CHAPTER XXXVIII.

THE INDICATOR.

Computations from Indicator Diagrams ... 445
Indicators ... 445
Description of ... 445
Thompson indicator ... 445
Tabor indicator ... 445
Diagrams ... 446
Admission of steam to indicator ... 446
Expansion line or curve ... 446
Exhaust line ... 446
Back pressure line ... 446
Atmospheric line ... 446
Theoretical diagram ... 446
Compression line or curve ... 447
Condensing engine diagram ... 447
Vacuum line of indicator diagram ... 447
(Barometer, construction of) ... 447
(Barometer, graduation of) ... 448
Indicator springs ... 448
Tables of springs for indicators ... 448
Attachment of indicators to an engine ... 448, 449
Pantagraph motions ... 449
Expansion curve, testing of ... 449, 450
Theoretical expansion curve ... 449, 450
Calculations from diagrams ... 450 to 453
Horse power ... 450, 451
Area ... 451
Rule for calculating horse power ... 451
Mean effective pressure ... 452
Steam used in engines ... 452
Water consumption ... 452, 453
Defective diagrams of engines ... 453
Excessive lead of engines ... 453
Theoretical compression curve of engines ... 454

CHAPTER XXXIX.

AUTOMATIC CUT-OFF ENGINES.

Definition ... 455
Corliss Automatic Cut-off Engine ... 455, 456
Valve gear of ... 456, 457
Governor of ... 457, 458
Admission of steam into ... 458
Lap of valve of ... 458, 459
High Speed Automatic Engines ... 459, 460
Speed of ... 459
Wheel governors for ... 459, 460
Straight Line Automatic Engine ... 460, 461
Important details of ... 461, 462
Steam Fire Engine ... 462, 463
Boilers of ... 462, 465
Pumps ... 463, 464
Heaters for ... 464, 465

CHAPTER XL.

MARINE ENGINES.

Various Kinds of Marine Engines ... 466 to 483
High pressure engines ... 466
Compound condensing engines ... 466, 477
Triple expansion engines ... 468
Donkey engines ... 474
Trunk engines ... 478

PAGE

Oscillating engines ... 478
Geared engine ... 478
Compound engine of the steamship *Poplar* ... 479, 482, 483
Arrangement of Marine Engine Pumps ... 468
Boilers of Marine Engines, Arrangement of ... 468, 469
Various Parts of Marine Engines, etc. ... 470 to 481
Valve for intermediate cylinder of triple expansion engines ... 470
Link motions for triple expansion engines ... 470
Auxiliary or by-pass valve ... 470, 471
Oiling apparatus ... 471, 472
Surface condensers ... 472
Circulating pumps ... 472
The snifting valve ... 472
The blow-through valve ... 472
Air pumps ... 473
The air chamber ... 473
Feed escape or feed relief valve ... 473
Bilge injections for marine engines ... 473, 474
Surface condensing, advantages of ... 474
Valves of the surface condensing engine ... 474
Case hardening ... 474
Link motion for marine engines ... 475
The separate expansion valve ... 475
Friction of slide valves ... 475
Double beat valves ... 475
The siphon ... 475
Steam lubricators ... 476
Marine engine valves that are worked by hand ... 476
Vacuum gauge ... 476
Condenser, to find the total pressure in the ... 476
Paddle wheels ... 476, 477
Screw propeller ... 477
The thrust bearing ... 477
Marine engine, the principal parts of ... 477
Lagging marine engines ... 478
Propeller cylinders ... 478
Fuel required ... 478
Freezing of pipes ... 478
Failure of engine to start, causes of ... 478, 479
Defective vacuum, causes of ... 479
Heating, causes of ... 479
Construction of a triple expansion engine ... 479 to 481

CHAPTER XLI.

MARINE BOILERS.

Plates for Marine Boilers ... 484
Iron ... 484
Steel ... 484
Strength of ... 474
Boiler Stays. ... 484
Methods of securing ... 484
Boiler Tubes ... 484
Methods of securing ... 484
Causes of leaks ... 484
Repairing leaks ... 484
The Up-take ... 485
The Receiver ... 485
The Fittings and Their Uses ... 485, 486
Valves ... 485, 486
Gauges ... 486, 386
Cocks ... 486
Important Features and Facts ... 486, 487
Boiler scale ... 486
The salinometer ... 486
Priming, the prevention of ... 486
Supplemental parts ... 486, 487
The super heater ... 486
The draught ... 487
Wasting of plates ... 487
Fuel, the quantity of ... 487
To Relieve the Boiler in Case of Accident ... 487
Steel Marine Boiler ... 488
The "Martin" Boiler ... 488
Testing and Examining Boilers ... 488 to 491
Hydraulic Tests ... 488
Related to stays ... 488, 489
On new and old boilers ... 488, 489
Internal examinations ... 490
Preparation for ... 490
Safety valves ... 490
Bottom of the boiler ... 490
Bottom and sides of the furnace ... 490
Boxes and stays ... 490
Use of chipping hammer ... 490
Pit holes in the bottom of a furnace ... 490
Drilling through the plates ... 490
Flanges of furnaces ... 490
Deposits on the necks of stays ... 490

PAGE
Man-hole door ... 490
Superheater ... 491
Proportions for grate surface ... 491
Outside examination ... 490
Cement beds for boilers ... 490
Proportions for circular tubular boilers ... 491

CHAPTER XLII.

HARDENING AND TEMPERING.

Purposes ... 492
To resist wear ... 492
To increase elasticity ... 492
To provide a cutting edge ... 492
Manufacturer's Temper ... 492
Blacksmith's Temper ... 492
Color Tempering ... 492
Practical Processes ... 493 to 496
The muffle ... 493
Warping ... 493
Rapidity of reduction of temper ... 493
Brown and Sharpe's practice ... 493
Waltham Watch Co.'s practice ... 493
Pratt and Whitney Co.'s practice ... 493
Morse Twist Drill Co.'s practice ... 493
Outside hardening ... 494
Heating in fluxes ... 494
Monitor Sewing Machine Co.'s practice ... 494
Hardening saws ... 494
Drawing the temper ... 494
1. Lying in an open furnace ... 494
2. Stretched in a frame ... 494
3. Between dies ... 494
Stiffening saws ... 495
Tomlinson Carriage Spring Co.'s practice ... 495
Special brands of steel ... 495
Drawing the temper ... 495
Columbia Car Spring Co.'s practice ... 495
Gregory's crucible steel ... 495
Hardening and tempering at one operation ... 495
Tables of hardening and tempering ... 495
New Haven Clock Co.'s practice ... 496

CHAPTER XLIII.

REFRIGERATION AND ICE MAKING.

An Ice Chest a refrigerating machine ... 497
Air cooled ... 497
Food cooled ... 497
Heat carried out with water ... 497
Circulating medium ... 497
Evaporation of water requires heat ... 497
Anhydrous Ammonia ... 497
How ammonia cools air ... 497
Temperatures for Cold Storage ... 497
Ammonia circulated in pipes ... 498
Pipes in cooling room ... 498
Ammonia forced into ... 498
Ammonia vapor pumped out ... 498
Compression of ammonia vapor ... 498
Ammonia vapor liquefied ... 498
Direct Expansion System ... 498
Expansion coil ... 498
The compressor ... 499
The oil cooler ... 499
The condenser ... 499
The expansion cock ... 499
Cooling disks ... 499
The chill room ... 499
Baudelot cooler ... 499
The liquid ammonia storage tank ... 500
The separating tank ... 500
Pressure indicators ... 500
Advantages of showering water on condenser ... 500
Of forcing vapor first into lowest coil ... 500
Brine System ... 500
More expensive ... 500
Pipes become clogged ... 500
Advantage ... 500
Refrigerator (220-Ton) ... 501
Ship Machine ... 501
Compressor, vertical, double-acting ... 501
Difficulties of making ... 501
Injecting oil ... 501
Admission valves ... 501
Discharge valves ... 501
Piston discharge valves ... 502
Distribution of oil ... 502
Valve seats covered with oil ... 502
Full work at every stroke ... 502
Horizontal, double-acting ... 502
The Ammonia Charge ... 502
The Absorption System ... 502
Affinity of water for ammonia ... 502
Ammonia "still" ... 502
The absorber ... 502
The analyzer ... 502
Pipe Line Service ... 502
Street pipes ... 503
Ammonia pipe, liquid ... 503
Ammonia pipe, vapor ... 503
By-pass pipe ... 503
Admitting a new customer ... 503
Either direct or brine system ... 503
Supplying ice water ... 503
Thermostat regulator ... 503
Cost of service ... 503
Ice Making ... 503
Proportion of refrigerators employed in ... 503
Brine tank ... 503
Standard ice-cans ... 503
Time of freezing ... 503
Tankroom ... 504
Emptying the ice-cans ... 504
Making clear ice ... 504
Slow freezing ... 504
Agitating the water ... 504
Distilled water ... 504
Using steam ... 504
Purifying steam ... 504
Snowy ice ... 504
Plate ice ... 504
On sides of brine cells ... 505
On sides of air cells ... 505
Insulation ... 505
Pitch to make brick walls air tight ... 505
Conductors of heat ... 505
Doors and windows ... 505
Odorless materials ... 505
Triple insulation ... 505
Double insulation ... 505
For walls ... 505
For floors and ceilings ... 505
South wall ... 506
South America or Africa ... 506
Heater in next room ... 506
Freezing room ... 506
Liquid Air ... 506
Intense cold ... 506
Experimental stage ... 506
Cost of production ... 506
Ammonia Table, Properties of ... 506

CHAPTER XLIV.

ELECTRICAL MACHINES AND MOTORS.

Electric Generator ... 507
Generators not now called dynamos ... 507
Transformer ... 507
Electrical energy obtained ... 507
Power absorbed in machine ... 507
Generators ... 507
Alternators ... 507
Constant current machines ... 507
Constant potential machines ... 507
Uses of generators and alternators ... 507
Commutator ... 507
One hundred years ago ... 507
Faraday, 1831 ... 507
Magnet and iron filings ... 507
Lines of Magnetic Force ... 508
The closed loop ... 508
Faraday's Experiments ... 508
Developing a current ... 508
Magnetism an accompaniment of electric currents ... 508
A solenoid ... 508
Electro-magnet ... 508
Field magnet ... 508
Concentrating lines of force ... 508
Direction of current ... 508
Conveying the current to external circuit ... 509
The Armature ... 509
Ring ... 509
Drum ... 509
Springs or brushes ... 509
Course of the current ... 509

PAGE
Construction of Commutator ... 509
Insulation ... 509
Segments ... 510
Increasing the number of segments ... 510
Ring Armature ... 510
Cores of armatures ... 510
Generating a current ... 510
Outside wires induce current ... 510
Diagram of winding ring armature ... 510
Study of current formation ... 511
Current reverses at every revolution of the armature ... 511
Armature coils attached to commutator ... 511
Several turns in each coil ... 511
Coils connect with segments and with each other ... 511
Drum Winding ... 511
A study in detail ... 511
Electromotive Force ... 512
Electric Current ... 512
Modified by resistance ... 512
Electric Units ... 512
Volts ... 512
Amperes ... 512
Ohms ... 512
Relation between electrical units ... 512
Constant voltage gives changeable current, unless electromotive force be varied ... 512
Constant Potential Generator ... 512
Constant Current Generator ... 512
Field Winding ... 512
Series ... 512
Shunt ... 512
Compound ... 512
Uniform Voltage at point of delivery ... 513
The line drop ... 513
Increase of current ... 513
Proportion of series coils ... 513
Automatic regulation ... 513
Constant potential machines, for all purposes except "arc lighting" ... 514
Constant current machines for "arc" lights ... 514
Bipolar Machines ... 514
Made in small sizes ... 514
Great variety of design ... 514
Multipolar Machines ... 514
Poles alternate in succession ... 514
Made in large sizes ... 514
Armature wires become bars ... 514
Formed coil winding ... 515
Ring winding connections ... 515
Analysis of polarity ... 515
"Series" connection ... 516
Voltages added ... 516
Adding voltages decreases current ... 516
Connections in parallel ... 516
"Wave winding" ... 516
Lap winding ... 516
Three stages of winding ... 516
Insulation of coils ... 516
Formed coils soldered into commutator ... 516
Railway motor armature ... 517
The core ... 517
Coils in place ... 517
Finished armature ... 517
Coils bend down toward shaft ... 517
Advantages ... 517
Internal Fields ... 518
Outside surface forms commutator ... 519
Wear of commutator ... 519
Insulating Armature Coils ... 519
Insulating materials ... 519
Mechanically weak ... 519
The best ... 519
Mica and cloth ... 519
Waterproofing ... 519
Holding Coils in place ... 519
The Commutator ... 519
Perfectly round and smooth ... 519
Sparking ... 519
Insulation ... 519
When the outside of armature is the commutator ... 520
Removable segments ... 521
Formation of ... 522
Armature Cores ... 522
Must not be of one solid mass ... 522
Insulated laminations ... 522
Direction of ... 522
Sheet iron and paper ... 522
Breaking joints ... 522
Supporting the laminations ... 522
Eddy Currents ... 523
Laminated poles in large machines ... 523
Direction of pole laminations ... 523
Dovetailing of pole laminations ... 523
Relation of pole pieces and armature ... 524
Clearance or air gap ... 524
Grooved cores in large machines ... 524
Operation of Generators ... 524
Siemens & Halske generators ... 524
Armature attached to the engine shaft ... 525
Outside of armature is the commutator ... 525
Brushes on insulated rods ... 525
Spring bearings ... 525
Alternate connections ... 525
Internal stationary field ... 525
Second design ... 525
Commutator at one side of armature ... 525
Brushes held in a movable spider ... 525
Setting the brushes ... 525
Walker Co. generators ... 526
Large number of poles ... 526
Brush holders carried by a ring-shaped frame ... 526
Adjustment of ... 526
Insulation of brushes ... 526
Second design for independent foundation ... 526
Third design, direct connected ... 526
Cable connection of brush holders ... 526
Increase of capacity reduces velocity ... 526
1,000 H. P. generator ... 527, 528, 529
Bullock Electric Co. generators ... 527
Commutator face wide ... 527
Great current capacity ... 527
Westinghouse generator ... 527
Strong current at low voltage ... 527
Two commutators ... 527
Advantage ... 527
Independent adjustment of each set of brushes ... 527
Fourteen-pole machine ... 527
Sturtevant generator, four-pole type ... 527
Crocker-Wheeler generator, six-pole type ... 527
Winding of armature ... 527
Wide commutator surface ... 534
Massive brush holder frame ... 534
General Electric Co. generator ... 530
Spider mounted brushes ... 530
Locking device for brushes ... 530
Double generator ... 534
Railway power generator ... 539
Small generator for light in private buildings ... 539
Large generators direct connected ... 530
Small generators connected to high-speed engines ... 532
Vertical machines generally used on ships ... 532
Connection between generator and engine ... 539
Motors ... 540
Generator becomes a motor ... 540
Constant speed motors ... 540
Variable speed motors ... 540
Self-regulating ... 540
Mechanical regulation ... 540
Winding of motors ... 540
Series motors ... 540
Shunt wound ... 540
Relation of generators to motors ... 540
Power delivered by a motor ... 541
Loss of power ... 541
Difference between generator and motor ... 541
General Electric Co. motors ... 541
Multipolar type ... 541
Iron-clad type ... 541
Crocker-Wheeler motor ... 541
Direct connected ... 541
Attached to end of a line of shafting ... 542
90 H. P. motor ... 542
Large power with low velocity ... 542
Bullock Company motor ... 542
Sturtevant motor ... 542
Mounting motors on ways ... 542
Principles of Operation of Motors ... 542
Pull between field and armature poles ... 542
Increase of current increases the pull ... 543
Resistance of the armature wire ... 543
Reaction between the two forces ... 543
Twisting of the field ... 543
Starting a constant potential motor ... 543
Adding resistance in armature circuit ... 543
Motor starter ... 544
Two wires from the line supply ... 544
Three wires from starter to motor ... 544
Contacts ... 544
Resistance ... 544
Cutting out resistance ... 544
Slow or quick ... 544
Prevention of injury by excessive current ... 545

PAGE
Plain, overload, underload ... 545
Increasing the load ... 545
Short circuiting by burning out insulation ... 545
Circuit breaker ... 545
Protection in case current dies out ... 545
Railway Motors ... 545
Series wound ... 545
Resistance in the motor circuit ... 546
Westinghouse railway motor ... 546
Complete covering ... 546
Provision for easy examination ... 547
Four-pole type ... 547
Series wound with formed coils ... 547
Two brushes only ... 547
Original Westinghouse railway motor ... 547
Two methods of suspending motors ... 547
Excluding grease and oil from armature ... 547
Walker Company railway motor ... 548
Gears usually one to four ... 548
From 25 to 200 horse-power ... 548
Suspension springs ... 548
Starting resistance ... 548
Usually two motors for each car ... 548
Controllers ... 549
Reversing handle ... 549
Controlling handle ... 549
Cutting out one motor ... 549
Elevator Motors ... 550
Shunt wound ... 550
Safety ... 550
Drum type with worm gearing ... 550
Otis Brothers & Co. elevator ... 550
Controlling the motion ... 550
Reversing switch ... 550
Brake ... 550
Sprague elevator ... 550
Screw and sheaves ... 550
Car switch ... 550
A. B. See elevator ... 550
Morse, Williams & Co. elevator ... 550
Graves elevator ... 550
Crocker-Wheeler hoisting machines ... 550
Series and shunt wound ... 550
Direct Connected Motors ... 550
Advantages ... 550
Wagner ventilating fan and motor ... 550
Sturtevant fan blower and motor ... 555
Thresher Electric Co. motor and paper cutter ... 555
Thresher Electric Co. motor and printing press ... 555
Bullock Co. motor and engine lathe ... 556
Bullock Co. motor and drill press ... 556
Bullock Co. motor and boiler maker's punch ... 556
Crocker-Wheeler motor and boring mill ... 556
Crocker-Wheeler motor and drill press ... 556
Not always advantageous ... 556
Alternating Current Machinery ... 556
Simplicity of ... 556
Currents react upon themselves ... 556
Diagrammatic explanation of action ... 557
Increase and decrease of electromotive force ... 557
Alternate positive and negative ... 557
One cycle of the current ... 557
Frequency of the electromotive force ... 557
Single phase generator ... 558
Two phaser ... 558
Three phaser ... 558
Frequency of alternating currents ... 558
Multipolar construction ... 558
Two-phase generator of the 8-pole type ... 559
Adjoining poles form a complete machine ... 559
Field coils require a continuous current ... 559
A field exciter ... 559
Self-exciter ... 560
Westinghouse alternator design ... 560
Without coils ... 560
Manner of mounting coils ... 560
Complete machine ... 560
Niagara Falls power plant (Westinghouse) ... 560
Horizontal, on upper end of turbine shaft ... 560
900 H. P., 2-phase Westinghouse generator ... 560
Induction Generators ... 560
Revolving the field instead of the armature ... 560
Westinghouse induction generator ... 560
Single-phase or multiphase ... 562
Exciting the field ... 562
Warren Electric Co. induction generator ... 562
For slow velocities ... 563
Advantage ... 563
Fort Wayne Co. induction generator ... 563
General Electric Co. induction generator ... 563
Insulating the armature core ... 563

PAGE
Eddy currents a disadvantage ... 564
Adaptability for high voltage ... 566
Stanley Co. induction generator ... 567
Two rotating parts ... 567
Direct connected to Willans engine ... 567
General Electric Co. induction generator ... 567
Direct connected to Corliss engines ... 567
Number of poles very great ... 567
Frequency of current ... 567
High voltage of alternating currents ... 567
Transmitting power of waterfalls ... 567
Increasing voltage by means of transformers ... 567
Alternating Current Motors ... 567
Alternating generators may be used as motors ... 567
Must be supplied with the proper phase current ... 567
Field magnetism must be the same ... 567
Velocity must conform to original design ... 568
"Synchronous motors" ... 568
Multiple velocities ... 568
Develop no power except at full velocity ... 568
Will not start themselves ... 568
Adapted to large capacity requirements ... 568
Act by induction ... 568
Horizontal and vertical poles ... 568
Current cycles ... 569
Rotating Field Motors ... 570
Three-phase current magnetizing a 6-pole field ... 570
Speed varies with increase of load ... 571
Solid iron rotary field motor ... 571
Eddy currents ... 572
Velocity of rotation ... 572
Westinghouse induction motor ... 572
Armature differs from that of induction generator ... 573
Variable speed type ... 573
Constant speed type ... 573
Squirrel cage winding ... 573
Armature resistance small ... 573
Reversal of currents ... 573
Crane operated by induction motor ... 573
Pump operated by induction motor ... 573
Line shafting induction motor ... 573
Four or six phase currents conveyed with three wires ... 574
Starting an induction motor ... 574
Resistance within the armature ... 574
Resistance in the field circuits ... 574
Alternating *versus* continuous current motors ... 574
Transformers ... 575
Primary current ... 575
Secondary current ... 575
Principle of action ... 575
Stationary transformers ... 575
Diagrammatic explanation ... 575
Movement of lines of force ... 575
Induce higher or lower voltage ... 575
Reduced for incandescent lights ... 576
Voltage too high ... 577
Use of transformers ... 577
Construction of commercial transformers ... 577
Step-down and step-up transformers ... 577
Difference in voltage ... 577
Rotary Converters ... 577
Transforming alternating to continuous current ... 577
Construction of ... 577
Continuous Current Boosters ... 578
Loss of voltage in long distances ... 578
Method of action ... 579
Voltage increased, but strength of current reduced ... 579
Motor dynamo ... 579
Dynamotor ... 579
Arc Light Dynamos ... 579
Early history ... 579
Constant current type ... 579
Regulation ... 579
Brushes automatically moved ... 579
Varying the field magnetism ... 579
Arc Lamps ... 580
Originally ... 580
At present ... 580
Regulation ... 580
Operated from regular arc dynamo ... 580
Connected in series ... 580
Operated by constant potential or alternating current ... 580
Connected in parallel ... 580
Burning in the open air ... 580
Single and double carbons ... 580
Jump of the current ... 580
Feeding the carbons ... 580
Gear feed ... 580
Clutch feed ... 582, 584
Differential magnets ... 583
Regular electro magnets ... 583

PAGE
Solenoid magnets ... 583
Inclosed arc lamps ... 583
Life of carbons ... 583
Length of arc ... 584
Dash pot for carbon ... 584
Danger of open-air arc lamps ... 584
Safety Fuses ... 584
Principle of operation ... 584
Material ... 585
Advantage of lead ... 585
Single and double pole ... 585
Switches ... 585
Made in many forms ... 585
Single-pole single-throw ... 585
Double-pole single-throw ... 585
Double-pole double-throw ... 585
Multi-throw ... 586
Movement rapid ... 586
Snap switch ... 586
Motor Starters and Field Regulators ... 586
Without protection to motor ... 586
Automatic underload starter ... 586
Automatic under and over load starter ... 587
Self-acting starter ... 587
Field regulators ... 587
Material ... 588
Also called rheostats ... 588
Circuit Breakers ... 588
Principle of operation ... 588
General construction ... 588
Double-pole breakers ... 588
An elaborate breaker ... 588
Double-pole double-coil breaker ... 589
Advantage over safety fuse ... 589
Lightning Arresters ... 589
For weak currents ... 589
For strong currents ... 589
Resistance in the new path ... 591
Solenoid ... 592
Pendulum ... 592
Blow-out ... 592
For alternating currents ... 592
Double-pole ... 592
Principle of action ... 593
Single-pole ... 593
Measuring Instruments ... 593
Varieties ... 593
Watt ... 593
Kilowatt ... 593
Volt meter ... 593
Two indicator arms ... 594
Principle of operation ... 594
Construction ... 594
Variation for ammeter ... 594
Course of the current ... 594
High resistance ... 595
Switchboard type ... 595
Illuminated dial ... 595
Potential indicator ... 596
Ground detectors ... 596
Size immaterial for accuracy ... 597
Power of a current ... 597
Watt meters ... 597
Watt hour meters ... 597
Ampere hour meters ... 597
Principle of operation ... 597
Kilowatt meter ... 598
Recording meters ... 598
Switchboards ... 598
General appearance ... 598
Connections ... 598
Description ... 601
Use of ... 601
Convenience of ... 601
Circuit breaker on back of board ... 602
Material and finish ... 602
An elaborate example ... 602
Dynamo bus ... 602
Street service bus ... 602
Three-wire system ... 603
Equalizing bus ... 605
Management and Care of electrical machinery ... 606
Location ... 606
Inspection ... 606
Foundations ... 607
Insulation ... 607
Sliding base ... 607
Rough handling ... 607
Cleanliness ... 607
Lifting the armature or magnet coils ... 607
Floor about the generator ... 607

PAGE
Railing about large machines ... 607
Starting generators without current ... 607
Testing insulation ... 607
Locating switchboard ... 607
Wire connections to switchboard ... 607
Starting up Generators ... 607
Single generator ... 607
Two or more generators ... 607
Daily Care of Generators and Motors ... 608
Cleanliness ... 608
Keeping tools away ... 608
Brass tools ... 608
Oiling ... 608
Heat of bearings ... 608
Setting brushes ... 608
Size of spark ... 608
Surface of commutator ... 608
Sparking point ... 608
Spacing of brushes ... 608
Angle of brushes ... 608
Causes of sparking ... 608
Commutator insulation ... 609
Dampness ... 609
Increase of current ... 609
Overload ... 609
Reversed polarity ... 609
Ring of fire ... 609
Failure of one generator ... 609
Cutting out a generator ... 609
Equalizing load ... 609
Breakdowns ... 609
Generator shaft central with forces of pole pieces ... 609
Full speed before connecting ... 609
Tension of belts ... 609
Connections firm and bright ... 609
Generator room clean and dry ... 609
Insulation clean and dry ... 609
Generator bearings fully oiled ... 609
Disturbing brushes ... 609
Testing insulation ... 609
Closing the main generator switch ... 609
Closing the bus wire switch ... 609
Special care of alternators ... 610
Starting the motor ... 610
Handle of starter never to be left partly turned on ... 610
Management of Arc Lamps ... 610
Weight of the carbon rod ... 610
Distance between carbons ... 610
Cleanliness of mechanism ... 610
Insulation ... 610
Inspection ... 610
Carbons in line ... 610
Arc Lamp Dynamos ... 610
Crocker-Wheeler dynamo ... 610
Compound-wound ... 610
Shunt-wound ... 610
Reversing compound-wound ... 611
Shunt-wound direct, with reversing field regulator ... 611
Compound-wound direct, with field regulator ... 611
Reversing compound-wound direct, with reversing field regulator ... 611
Shunt-wound direct, with field regulator ... 612
Reversing shunt-wound direct, with reversing field regulator 612
Two compound-wound direct, in multiple ... 612
Compound Dynamos in Multiple ... 612
Connecting in parallel ... 612
Running in parallel ... 613
Disconnecting in multiple ... 613
Different sizes run in parallel ... 613
Controllers ... 613
Backward and forward speeds equal ... 613
Regulation of speed ... 613
Cylinder reverser ... 614
"Commuter" ... 614
Reversing compound-wound direct motor with commuter ... 614
Reversing shunt-wound direct with cylinder reverser ... 614
Reversing series-wound direct with cylinder reverser ... 614
Reversing compound-wound direct with cylinder reverser ... 614
Shunt-wound direct with ordinary starter ... 614
Series-wound direct with ordinary starter ... 614
Compound-wound direct with ordinary starter ... 615
Shunt-wound direct with cut-off starter ... 615
Series-wound direct with cut-off starter ... 615
Compound wound direct with cut-off starter ... 615
Reversing compound-wound direct with commuter having electric brake connections ... 615
Commuters for six forward and two backward speeds ... 615
Circuits through commuters ... 615
Circuit never opened ... 615
Brake position ... 615
Wearing parts interchangeable ... 615

PAGE
Footbed wheel ... 615
Movable stop ... 615
Westinghouse Dynamo ... 616
Two-phase armature ... 616
Pulsating effect of the current ... 616
Armature protected ... 616
Removable armature coils ... 616
Removable commuter segments ... 616
Automatic current regulation ... 616
Independent field excitation ... 616
Circuit interrupting device ... 616
Setting up Electrical Machines ... 616
Provision against moisture ... 616
Protected from coal dust ... 616
Temperature and ventilation ... 616
Foundation ... 616
Insulation ... 616
Levelling and lining up ... 616
Erecting lower half ... 616
Bolting up ... 616
Handling the armature ... 617
Oiling the surface of commutator ... 617
Setting brushes ... 617
Length of spark ... 617
Causes of flashing ... 617
Care of belting ... 618
Causes of "hot box" ... 619
Drying out a new armature ... 619
Starting a new machine ... 619
Putting in the circuit breaker ... 620
Shutting down ... 620
Operating Generators in Multiple ... 620
Of the same size ... 620
Of differing designs or sizes ... 620
Dividing the load properly ... 620
Throwing in a second generator ... 620
Throwing in additional generators ... 620
Shutting down generators ... 620
Open or broken shunt circuit ... 621
Raising or lowering voltage of the line ... 621
Starting Shunt Motors ... 621
The oil gauges ... 621
Adjustment of brushes ... 621
Circuit breaker ... 621
Opening the field circuit ... 621
Temperature of bearings ... 621
Stopping Shunt Motors ... 621
Speed regulation of series and compound motors ... 621
Running Series and Compound Motors ... 621
Fitting the ends of carbons to the commutator ... 621
Edges of copper-plated brushes ... 622
Finding a ground ... 622
Causes of Sparking ... 622
Connection of brush-holder arms ... 622
Clockwise ... 622
Counter-clockwise ... 622
Finding polarity of brushes ... 622
Changing the direction of a four-pole generator ... 622
Of a six-pole generator ... 622
Failure of excitation of field magnets ... 622
Machine which has been in use ... 622
A new machine ... 623
The volt meter ... 624
Ammeter, or ampere meter ... 624
Switches ... 624

PAGE
Fuses ... 624
Automatic circuit breaker ... 624
Lightning arrester ... 624
Automatic ... 624
Hand regulator or field rheostat ... 624
Automatic starting and stopping rheostat ... 624
Multipolar Brush Arc Generator ... 624
Diagram of an 8-coil machine ... 624
Resistance of the coils ... 624
Double commutator ... 624
Large machines ... 625
Function of multicircuit device ... 625
Composition of the potential ... 625
Location of the load ... 625
Distribution of lamps ... 625
Provision of switches ... 625
Setting up and Running ... 625
Bed plate ... 625
Foundation ... 625
Insulation ... 626
Centre line ... 626
Securing the lower half of the machine ... 626
Suspending the armature ... 626
Handling the magnet yokes ... 626
Pressure brush ... 626
Distance of brush terminal from holder ... 626
Sparking ... 626
Bearing of brushes on commutator ... 626
Wiping the Commutator ... 626
Direction and course of the current ... 626
Changing the direction of rotation ... 626
Current automatically maintained constant ... 627
Regulator under commutator ... 627
Regulating current for magnetic clutches ... 628
Fastening the brush yoke ... 628
Adjusting the controller ... 628
Causing the current to increase ... 628
Shunt coils to reduce spark ... 629
Starting the machine ... 629
A longer spark on light loads and bad circuits ... 630
Connection for clockwise and counter-clockwise generators 630
Switches for clockwise and counter-clockwise generators ... 630
Operation of the oil pump ... 630
Limits of the regulator ... 631
Quick and slow operation of regulator ... 631
Running the oil pump ... 631
Changing the oil ... 632
Special observations on starting ... 632
Useful Tables ... 633
Current capacity of wire ... 633
Resistance of wire ... 633
Dimensions of motors ... 633
Requirements for operation of arc lights ... 633
Amperes of current for given number of lamps ... 633
Size of wire for given number of lamps ... 633
Voltage for arc lights ... 633

APPENDIX.

Part I.—Test Questions for Engineers ... 637
Test Questions for Operators of Electrical Machinery ... 643
Part II.—Dictionary of Workshop Terms ... 649

FULL-PAGE PLATES.

VOLUME II.

			Facing
Frontispiece		BUCKEYE ENGINE	TITLE PAGE
PLATE	I.	MILLING MACHINES	2
"	I.—A.	DETAILS OF MILLING MACHINES	3
"	I.—B.	EXAMPLES OF MILLING MACHINES	4
"	II.	DETAILS OF MILLING MACHINES	5
"	II.—A.	DETAILS OF MILLING MACHINES	4
"	II.—B.	EXAMPLES OF MILLING MACHINES	5
"	II.—C.	DETAILS OF MILLING MACHINES	6
"	II.—D.	ATTACHMENTS FOR MILLING MACHINES	7
"	II.—E.	ATTACHMENTS FOR MILLING MACHINES	6
"	II.—F.	MILLING MACHINES AT WORK	7
"	II.—G.	MILLING MACHINES AT WORK	6
"	II.—H.	MILLING MACHINES AT WORK	7
"	II.—I.	DUPLEX MILLING MACHINES	6
"	II.—J.	DUPLEX MILLING MACHINES	7
"	II.—K.	EXAMPLES OF MILLING MACHINES	8
"	II.—L.	VERTICAL MILLING MACHINE	9
"	II.—M.	VERTICAL MILLING MACHINE	8
"	III.	DETAILS OF MILLING MACHINE	9
"	IV.	DETAILS OF MILLING MACHINE	8
"	V.	MILLING MACHINES	9
"	VI.	DUPLEX MILLING MACHINE	8
"	VII.	TRANSVERSE MILLING MACHINE	9
"	VIII.	EXAMPLES OF MILLING MACHINES	10
"	IX.	EXAMPLE OF MILLING MACHINE	11
"	X.	EXAMPLES OF MILLING MACHINES	12

			Facing
PLATE	XI.	EXAMPLES OF MILLING MACHINES	16
"	XII.	EMERY WHEELS AND GRINDING MACHINERY	50
"	XIII.	EMERY WHEELS AND GRINDING MACHINERY	51
"	XIV.	FULL AUTOMATIC GEAR CUTTER	53
"	XIV.—A.	GEAR CUTTING MACHINES	54
"	XIV.—B.	GEAR CUTTING MACHINES	58
"	XV.	GEAR CUTTING MACHINES	59
"	XVI.	GEAR CUTTING MACHINES	60
"	XVII.	GEAR CUTTING MACHINES	61
"	XVIII.	GEAR CUTTING MACHINES	60
"	XIX.	GENERATING BEVEL GEARS	61
"	XX.	GENERATING BEVEL GEARS	62
"	XXI.	DETAILS OF GEAR CUTTING	63
"	XXI.—A.	GEAR CUTTING MACHINES	62
"	XXI.—B.	DETAILS OF GEAR CUTTING	63
"	XXI.—C.	CUTTING WORM GEARS	64
"	XXI.—D.	CUTTING WORM GEARS	65
"	XXI.—E.	GEAR CUTTING MACHINES	66
"	XXI.—F.	GEAR CUTTING MACHINE	67
"	XXI.—G.	DETAILS OF GEAR CUTTING MACHINE	66
"	XXI.—H.	DETAILS OF GEAR CUTTING MACHINE	67
"	XXI.—I.	DETAILS OF GEAR CUTTING MACHINE	66
"	XXI.—J.	DETAILS OF GEAR CUTTING MACHINE	67
"	XXI.—K.	DETAILS OF GEAR CUTTING MACHINE	66
"	XXI.—L.	DETAILS OF GEAR CUTTING MACHINE	67
"	XXI.—M.	KEYWAY CUTTING MACHINE	68
"	XXI.—N.	PARTS OF KEYWAY CUTTING MACHINE	69
"	XXI.—O.	KEYWAY CUTTING MACHINE	68
"	XXI.—P.	DETAILS OF KEYWAY CUTTING MACHINE	69
"	XXI.—Q.	DETAILS OF KEYWAY CUTTING MACHINE	68
"	XXI.—R.	KEYWAY CUTTING MACHINES	69
"	XXI.—S.	KEY-SEATING MACHINES	70
"	XXI.—T.	KEY-SEATING MACHINES	71

			Facing
PLATE	XXI.—U.	KEY-SEATING MACHINES	70
"	XXI.—V.	COTTER AND KEY-SEAT DRILLING MACHINE	71
"	XXII.	SCRAPERS AND SCRAPING	97
"	XXIII.	OIL TESTING MACHINE	153
"	XXIV.	TESTING PLANER BEDS AND TABLES	180
"	XXV.	EXAMPLES OF PULLEYS	200
"	XXVI.	STRAIGHT LINE ENGINE	348
"	XXVII.	STRAIGHT LINE ENGINE	349
"	XXVIII.	DETAILS OF STRAIGHT LINE ENGINE	348
"	XXIX.	DETAILS OF STRAIGHT LINE ENGINE	349
"	XXX.	EXAMPLES OF ENGINES	376
"	XXXI.	TANDEM COMPOUND ENGINES	377
"	XXXII.	DETAILS OF ENGINES	376
"	XXXIII.	PROELL CUT-OFF WITH CORLISS VALVE	377
"	XXXIV.	EXAMPLE OF HIGH-SPEED ENGINE	376
"	XXXV.	TANDEM COMPOUND ENGINE	377
"	XXXVI.	TANDEM COMPOUND ENGINE	377
"	XXXVII.	BOILER FOR STATIONARY ENGINES	392
"	XXXVIII.	AMERICAN FREIGHT LOCOMOTIVE	420–1
"	XXXIX.	AMERICAN PASSENGER LOCOMOTIVE	422–3
"	XL.	LOCOMOTIVE LINK MOTION	425
"	XLI.	INJECTOR, AS APPLIED TO A LOCOMOTIVE	427
"	XLII.	LOCOMOTIVE AIR BRAKES	430–1
"	XLIII.	THE CORLISS VALVE GEAR	457
"	XLIV.	STEAM FIRE ENGINES	462
"	XLV.	COMPOUND MARINE ENGINE	468
"	XLVI.	TRIPLE EXPANSION MARINE ENGINE	472
"		COLOR TEMPERING SCALE	496
"	XLVII.	COOLING ROOMS	498
"	XLVIII.	REFRIGERATING PLANT	499

MODERN
MACHINE SHOP PRACTICE.

CHAPTER XXII.—MILLING MACHINERY AND MILLING TOOLS.

THE MILLING MACHINE.—The advantages of the milllng machine lie first in its capacity to produce work as true and uniform as the wear of cutting edges will permit (which is of especial value in work having other than one continuous plane surface); second, in the number of cutting edges its tools will utilize in one tool or cutter; and third, in its adaptability to a very wide range of work, and in the fact that when the work and the cutters are once set the operator may turn out the best quality of work without requiring to be a skilled machinist.

The extended use of the milling machine, which is an especial feature of modern machine shop practice, is due, in a very large degree, to the solid emery wheel, which provides a simple method of sharpening the cutters without requiring them to be annealed and rehardened, it being found that annealing and rehardening reduces the cutting qualifications of the steel, and also impairs the truth of the cutting edges by reason of the warping or distortion that accompanies the hardening process. Rotary cutters are somewhat costly to make, but this is more than compensated for in the uniformity of their action, since in the case of the cutter the expense is merely that involved in forming the cutting edges with exactitude to shape; once shaped the cutter will produce a great quantity of work uniform in shape, whereas in the absence of such cutters each piece of work would require, to bring it to precise form, as much precision and skill as is required in shaping the cutter.

If a piece of work is shaped in a planing machine, the different steps, curves, or members must be cut or acted upon by the tool separately, and the dimensions must be measured individually, giving increased liability to error of measurement, and requirng a fine adjustment of the cutting tool for each step or member. Furthermore, neither a planing machine or any other machine tool can have in simultaneous cutting operation so great a length of cutting edge as is possible with a rotary cutter.

Again, in the planing machine each cut requires to be set individually, and cannot be so accurately gauged for its depth, whereas with a rotary cutter an error in this respect is impossible, because the diameters of the various steps on the cutter determine the depth of the respective cuts or steps in the work.

In a milling machine the cut is carried continuously from its commencement to its end, whereas in a shaping or planing machine the tool does not usually cut during the back or return stroke. In either of these machines, therefore, the operator's skill is required as much in measuring the work, setting the tools feeds, &c., as in shaping the tools, whereas in the milling machine all the skill required lies in the chucking and adjustment of the work to the cutter, rather than in operating the machine, which may therefore be operated by comparatively unskilled labor.

The multiplicity of cutting edges on a rotary cutter so increases its durability, and the intervals at which it must be sharpened are so prolonged, that, with the aid of the present improved cutter grinding machines, one tool maker can make and keep in order the cutters for many machines.

The speed at which milling cutters are run varies very widely in the practice in different workshops. Thus upon cast iron, cutting speeds of 15 circumferential feet per minute will be employed upon the same class of work that in another shop would be done at a cutting speed of as high as fifty feet per minute. With the quick speeds, however, lighter feeds are employed. As the teeth of milling cutters are in cutting action throughout but a small portion of a revolution, they have ample time to cool, and may be freely supplied with oil, which enables them to be used at a higher rate of cutting speed than would otherwise be the case. Yet another element of importance in this connection is that when the cut is once started on a plain cutter, the cutting edges do not meet the surface skin of the metal, this skin always being hard and destructive to the cutting edges.

The simplest form in which the milling machine appears is termed the hand milling machine, and an example of this is

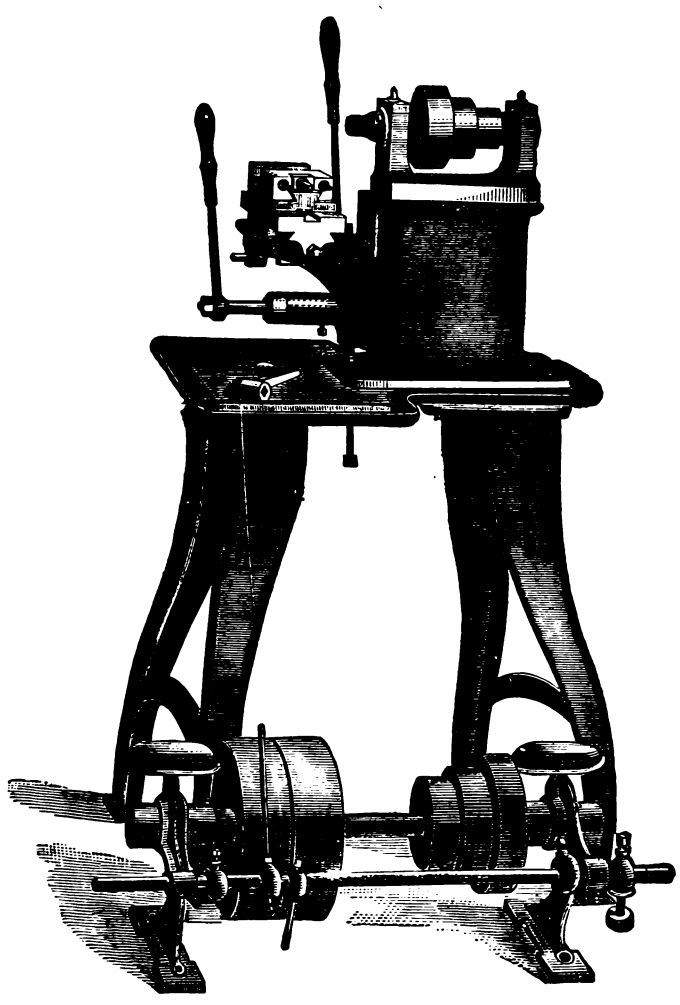

Fig. 1878.

shown in Fig. 1878. This machine consists of a head carrying a live spindle which drives the cutting tools, which latter are called cutters or mills. The front of the head is provided with a vertical slideway for the knee or bracket that carries an upper compound slide upon which the work-holding devices or chucks are held. The work is fed to the revolving cutter by the two levers shown, the end one of which is for the vertical and the other for the horizontal motion, which is in a direction at a right angle to the live spindle axis.

A No. 12 plain milling machine, 26 inches by $\frac{5}{8}$ inch by $7\frac{1}{2}$ inches, constructed by the Brown & Sharpe Mfg. Co., is shown in Fig. 1879.

This machine, by reason of its rigidity and the ease with which the table can be moved by hand, makes it well adapted for the rapid and economical production of many parts of machine tools, bicycles, electrical instruments, guns, etc.

The spindle runs in bronze boxes provided with means of compensation for wear. It is driven from cone by gear and pinion, and has a vertical adjustment by means of nuts placed on a vertical screw, and a transverse adjustment of $\frac{5}{8}$ inch. The front end has a No. 10 taper hole. The cone has three steps, the largest $12\frac{1}{8}$ inches in diameter, for $2\frac{1}{2}$-inch belt. The overhanging arm has an adjustable centre support and brace. Distance from centre of spindle to arm, $3\frac{3}{16}$ inches; greatest distance from end of spindle to centre in arm, with arm brace in position, $7\frac{3}{4}$ inches; without arm brace, $9\frac{3}{4}$ inches.

The table, including oil pans and channels, is 37 inches long and 10 inches wide; has a working surface 29 inches by 6 inches, and a T-slot $\frac{5}{8}$ inch wide. Greatest distance from centre of spindle to top of table, $7\frac{1}{2}$ inches; least, $2\frac{1}{2}$ inches.

The feed of table, of 26 inches, is automatic and can be automatically released at any point. There are three changes of feed, varying from .014 inch to .055 inch to one revolution of spindle.

In addition to the oil pans and channels surrounding the table, an oil tank is attached to each machine providing for the use of a pump.

Fig. 1880 represents Pratt & Whitney's *power* milling machine. The cone and live spindle are here carried in boxes carried in vertical slideways in the headstock, so as to be adjustable in height from the work table, and are provided with a footstock for supporting the outer end of the live spindle, which is necessary in all heavy milling. The carriage is adjustable along the bed, being operated by a screw whose operating hand wheel is shown at the left-hand end of the bed.

The automatic feed is obtained as follows: The large gear on the right of the main driving cone operates a pinion driving a small four-step cone connected by belt to the cone below, which, through the medium of a pair of spur gears, drives the feed rod, on which is seen a long worm engaging a worm-wheel which drives the feed screw. A suitable stop motion is provided.

What is termed a universal milling machine is one possessing the capacity to cut spiral grooves on either taper or parallel work, and is capable of cutting the teeth of spur and bevel gears or similar work other than that which can be held in an ordinary vise. These features may be given to a machine by devices forming virtually an integral part of the machine, or by providing the machine with separate devices which are attachable to the work table.

A No. 1 universal milling machine, 17 inches by 6 inches by 18 inches, designed and constructed by Brown & Sharpe, is illustrated in Figs. 1881 to 1887.

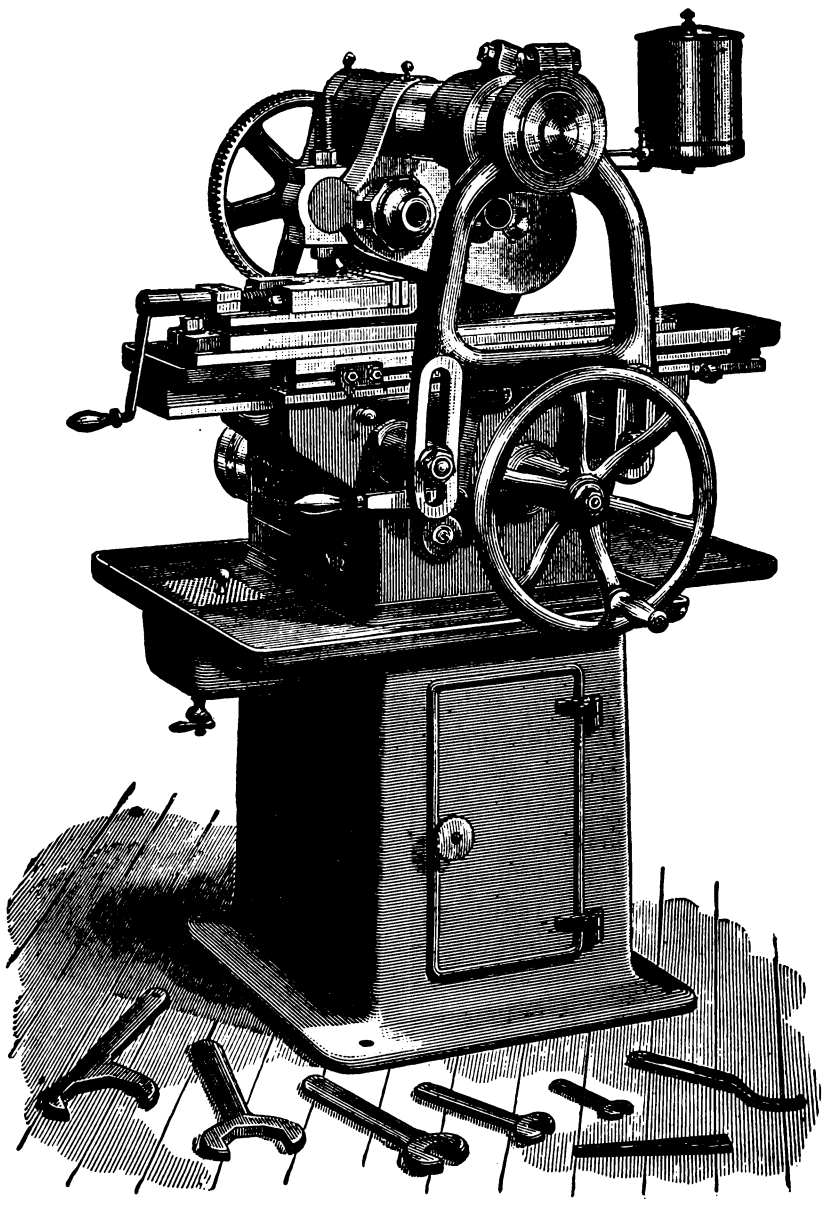

Fig. 1879.

The size and capacity of the No. 1 universal milling machine adapt it for use in the ordinary shop.

It is preëminently a tool-making machine, as is indicated by the fact that in the jig-making and fixture shop Messrs. Brown & Sharpe have nearly as many No. 1 universal milling machines as engine lathes, operating in all about forty of these machines.

The spindle has a hole $\frac{31}{32}$ inch in diameter its entire length, and at the front end a No. 10 taper hole. The spindle is ground and lapped and runs in bronze boxes that can be adjusted. The front box can be tightened by a nut, which brings the shoulder of the spindle against washers in front of the frame of the machine. The rear box is adjusted by tightening a nut; the front end of spindle is threaded, and is provided with a guard nut, which protects the thread when not in use.

The cone has four steps, the largest $10\frac{1}{4}$ inches in diameter, for 3-inch belt.

The overhanging arm has an adjustable centre, and can be easily reversed to receive an attachment, turned out of the way,

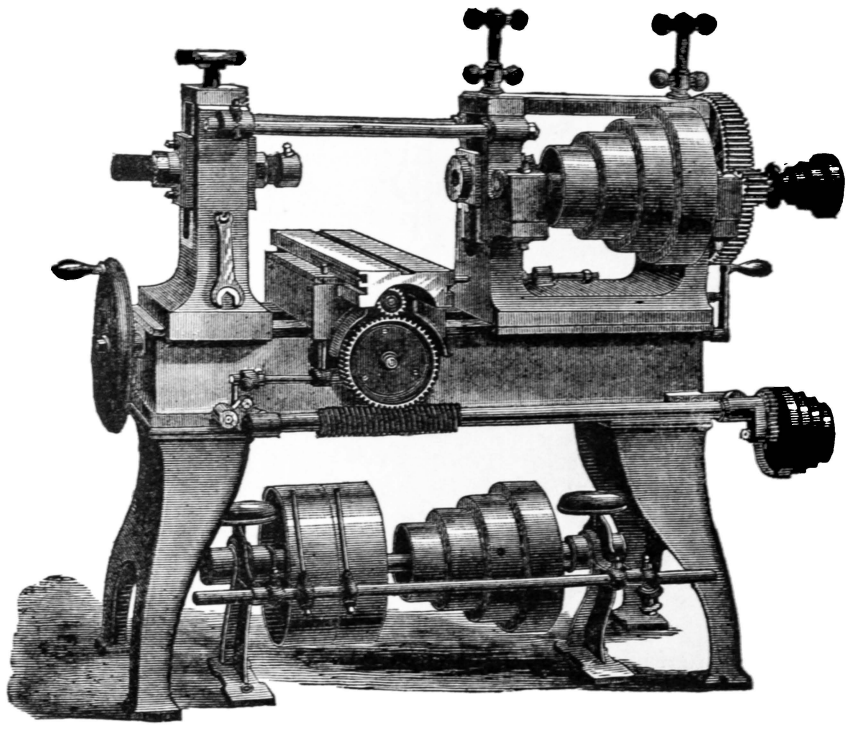

Fig. 1880.

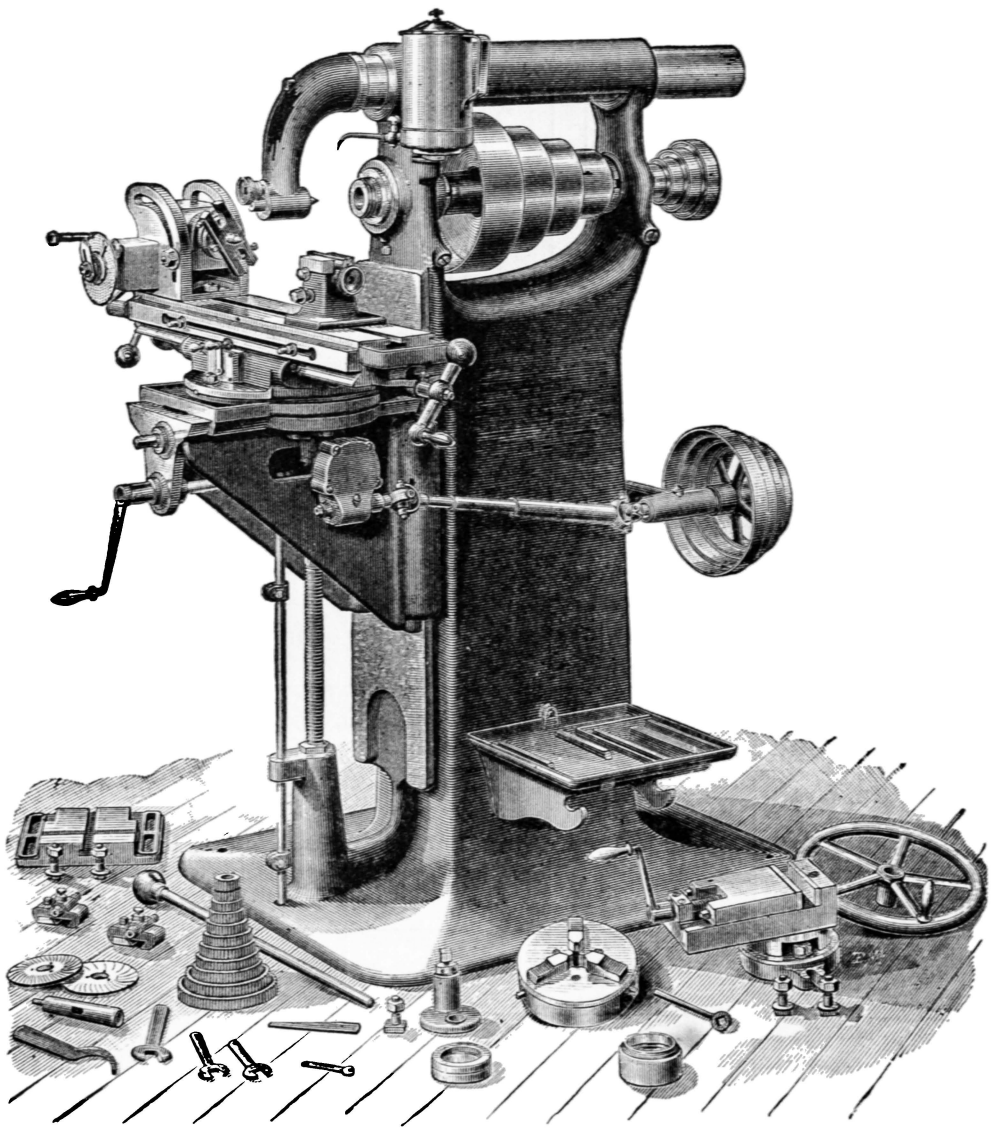

Fig. 1881.

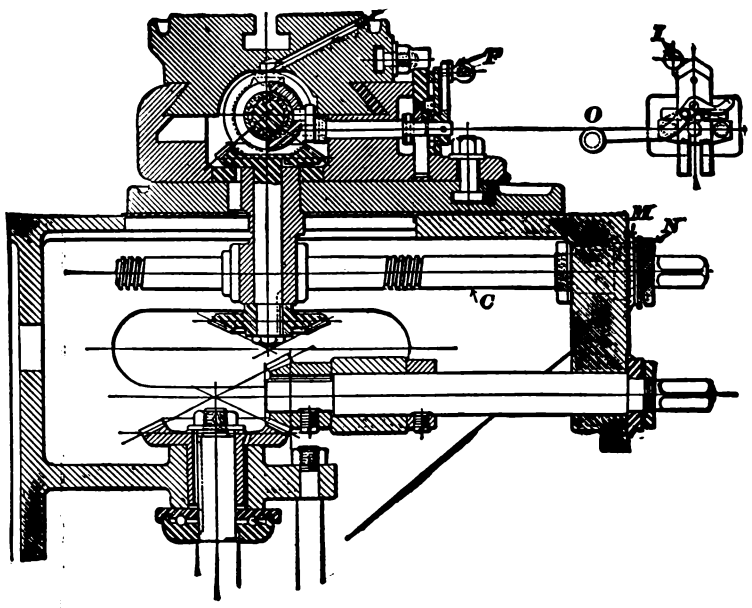

Fig. 1882.

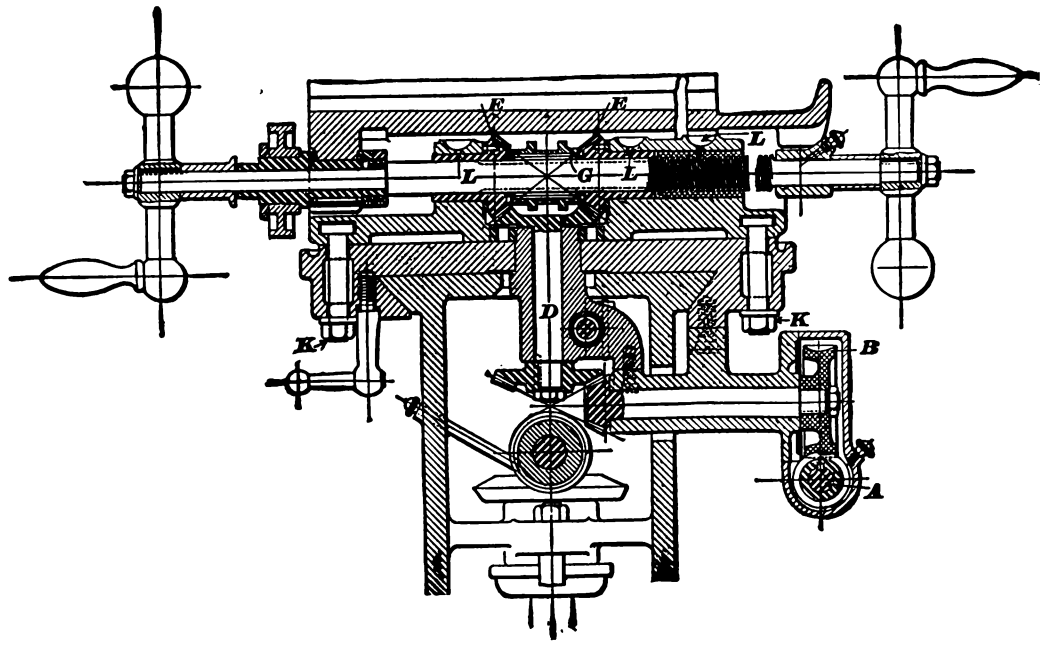

Fig. 1883.

FEED TABLE FOR No. I UNIVERSAL MILLING MACHINE.

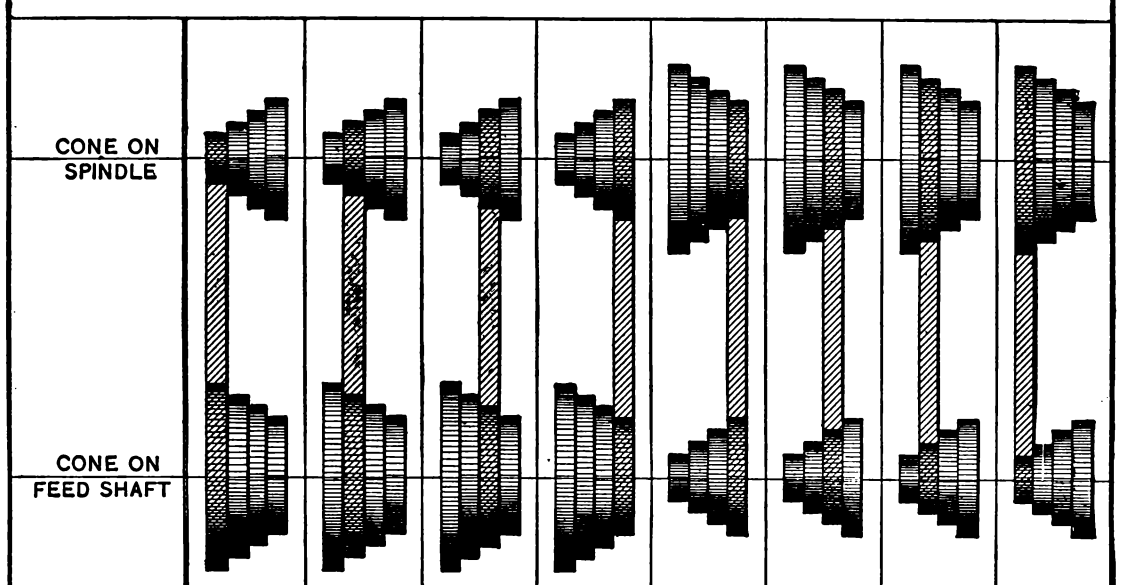

FEED PER REV. OF SPINDLE.	.004	.006	.010	.015	.021	.032	.048	.073
SPINDLE SPEEDS	TRAVEL OF TABLE IN INCHES PER MINUTE.							
68	$\frac{9}{32}$	$\frac{13}{32}$	$\frac{11}{16}$	1	$1\frac{7}{16}$	$2\frac{3}{16}$	$3\frac{1}{4}$	$4\frac{15}{16}$
110	$\frac{7}{16}$	$\frac{21}{32}$	$1\frac{1}{8}$	$1\frac{5}{8}$	$2\frac{5}{16}$	$3\frac{1}{2}$	$5\frac{1}{4}$	8
178	$\frac{23}{32}$	$1\frac{1}{16}$	$1\frac{3}{4}$	$2\frac{11}{16}$	$3\frac{3}{4}$	$5\frac{11}{16}$	$8\frac{1}{2}$	13
305	$1\frac{1}{4}$	$1\frac{13}{16}$	$3\frac{1}{16}$	$4\frac{9}{16}$	$6\frac{3}{8}$	$9\frac{3}{4}$	$14\frac{5}{8}$	$22\frac{1}{4}$

Fig. 1884.

or removed. The distance from the centre of the spindle to the arm is 5½ inches ; greatest distance from end of spindle to centre in arm, 10½ inches.

The table, including oil channels and pans, is 31 inches long and 6½ inches wide; has a working surface 28 inches by 5⅛ inches, and a T-slot ⅝ inch wide. By means of the shaft C, it can be moved transversely 6 inches. One revolution of the shaft moves the table .2 inch.

The saddle, which carries the table, pivots in the clamp bed, and is rigidly clamped to it by three bolts, which slide in circular slots and allow the table to be set at any angle to 45 degrees either way from zero. The saddle and knee are clamped by nuts with fixed handles, thus dispensing with wrenches.

The knee can be moved so that the top of the table at its lowest point will be 18 inches from the centre of the spindle. One revolution of crank moves the knee .1 inch.

The stop rod has sliding collars, J J, Fig. 1881, which can be set at any desired point when it is desired to limit the movement of the knee.

The feed of table, of 17 inches is automatic in either direction, and as it is central, can be changed by a simple movement of the lever on front of table. It can be used running in either direction, with the table at any angle to 45 degrees. The feed is driven from the feed cone through the universal joints and telescopic shafts on the side of the machine, the worm A, Fig. 1883, and worm wheel B, through the bevel gears and the shaft D, the bevel gear at the upper end of which shaft drives the loose bevel gears E E. Motion is imparted to the table by the lever F and the clutch G.

An automatic stop is provided to release the feed at any point when running in either direction. The auxiliary lever O, Fig. 1882, allows the feed to be released by hand.

A handle is provided at each end of the table for convenient operation by hand.

There are eight changes of feed obtained by transposing the feed cone pulleys, held in place by knurled nuts, giving a variation of feeds from .004 inch to .073 inch to one revolution of spindle. The lower cone pulleys are on an adjustable bracket, which allows the feed belt to be easily tightened.

Adjustable dials graduated to read to thousandths of an inch indicate the longitudinal, transverse, and vertical movements of table, and a series of graduations show in degrees the angle to the axis of the spindle at which the table is set. The dials may be adjusted without the aid of wrench or screw-driver.

The indexing headstock, or the spiral head, is to divide the periphery of a piece of work into a number of equal parts. Besides this, it is so made that while the table is being moved by the feed screw a positive rotary movement may be given to the work. The velocity ratios of these movements are regulated by change gears, and any spiral provided for may be cut without interfering with the divisions of the work obtainable from the index plate.

The spiral spindle, or spiral shell, is revolved by the index crank through a worm and worm wheel. The worm wheel has forty teeth, and, consequently, one turn of the index crank or worm shaft makes one-fortieth of a revolution of the spiral spindle, and by the use of an index plate, a turn of the worm shaft may be divided into various definite parts, and the fortieth of the revolution of the spiral spindle correspondingly subdivided.

In connection with the index plate, there is a sector which is used to obviate the necessity of counting the number of holes in the plate when dividing the work. The index crankpin in the crank may be used in any circle of holes in the index plate by adjusting the crank. The index plate can be kept from turning by the stop pin.

The steel bushings afford not only an extended bearing for the worm shaft, but also serve as a pivot for the spindle box. The front end of the spindle can thus be raised and the spindle set to any angle from five degrees below the horizontal to a perpendicular. The angle is shown by the graduations on one side of the spiral head. The spindle receives the same arbors as the main spindle, and is threaded for a chuck. When the chuck is not in use the thread is protected by a guard nut.

Tables are sent with each machine, giving the change gears for cutting sixty-eight spirals. The tables call for the "gear on worm," the "first gear on stud," which means the first gear placed on stud, the "second gear on stud," or second gear placed on stud, and the "gear on screw." The spiral head and footstock centres swing 8 inches in diameter and take 14 inches in length.

The chuck sent with the machine is provided with a plate which fits the spiral head spindle. A second chuck plate is also sent which fits the front of main spindle.

In oiling the machine it is important not to overlook the oil holes L L L, Fig. 1883. These holes are reached from the front of the table, when the table is placed in the three positions by matching lines on the table with a zero line on the front of the saddle.

Spirals not given in the table may be cut by using special gears or by determining by calculation many combinations of the regular gears not given in the table.

The three index plates sent with the machine have 15, 16, 17, 18, 19, 20 ; 21, 23, 27, 29, 31, 33, and 37, 39, 41, 42, 47, 49 holes, respectively.

By means of the raising block the spiral head may be set at any angle on the bed.

The vice swivels and has a graduated base, and may be set at

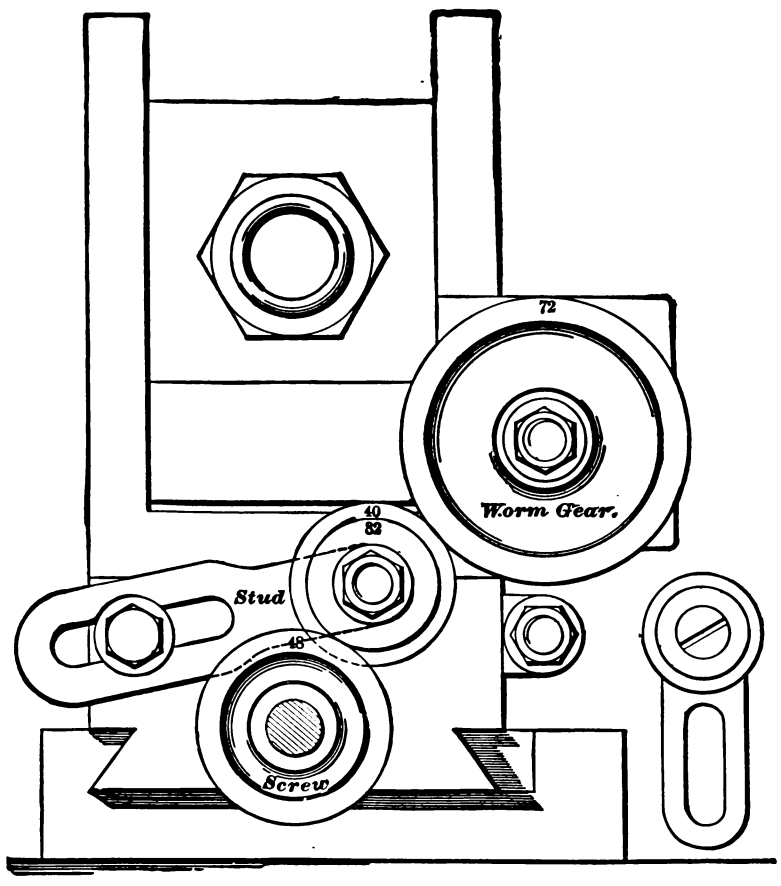

Fig. 1885.

any angle on the bed. The jaws are 5⅛ inches wide, 1⅛ inches deep, and will open 2¾ inches. The jaws are made of steel and left soft unless otherwise ordered. Being held by screws, they may be taken off and others designed for special work put in their places.

The overhead works, Figs. 1886 and 1887, include a shipper rod, stops and studs for attaching the lever, also hangers with adjustable self-oiling boxes.

The countershaft has two 14-inch friction pulleys for 3½-inch belts, and is usually run at about 110 revolutions a minute.

A No. 3 universal milling machine, 25 inches by 7½ inches by 18½ inches, designed and constructed by Brown & Sharpe, is illustrated in Figs. 1888 to 1890*a*.

The machine is similar in design to the No. 2 universal milling machines, and has the additional feature that it can be furnished, when desired, with power transverse and vertical feeds.

The spindle has a hole ¾ inch in diameter its entire length and runs in bronze boxes provided with means of compensation for wear. It is ground and lapped. The front end is threaded and has a No. 11 taper hole.

The cone has three steps, the largest 11 inches in diameter, for 3½-inch belt, and is back geared, giving six changes of speed. The gears are covered.

The overhanging arm has a bearing for outer end of arbor, etc., as well as an adjustable centre. It can be easily reversed to receive an attachment, turned out of the way, or removed. The distance from the centre of the spindle to the arm is 6⅜ inches; greatest distance from end of spindle to centre in arm, 18 inches.

The table, including oil pans and channels, is 44½ inches long, 9½ inches wide, has a working surface 40 inches by 8 inches, two T-slots ⅝ inch wide, a transverse movement of 7½ inches, and can be lowered 18½ inches from centre of spindle.

The details of the power transverse feed mechanism, furnished with this machine when desired, are shown in Figs. 1889 and 1890. The clutch gear A, Fig. 1889, revolves constantly and is driven by the gear G, Fig. 1890*a*. The transverse or cross feed is operated by turning knob B, Figs. 1889 and 1890; this operating the lever C throws the clutch D into mesh with the clutch gear A, Fig. 1889. The movable stop E can be set to release the feed automatically at any desired point.

The saddle which carries the table pivots in the clamp bed, and is rigidly clamped to it by three bolts which slide in circular slots and allow the table to be set at any angle to 45 degrees, each way from zero. The saddle and knee are clamped by fixed handles, thus dispensing with wrenches.

The knee can be lowered 18½ inches from centre of spindle, and has a stop rod with sliding collars, which may be quickly set at any desired point. The details of the power vertical feed, furnished on this machine when desired, are shown in Fig. 1890*a*. The vertical feed is driven from the feed cone pulleys through the shaft A, and bevel gears B B. The direction of the feed is determined by clutch C, which can be changed by loosening a knurled nut on the side of the box protecting the gears and clutch, and moving the clutch up or down and again tightening the nut. The driving shaft D transfers the power through the bevel gears E E to shaft F, carrying the spur gear G, meshing into the gear at the side of the clutch H; to throw the feed in the knob I is drawn out, which engages the clutch H with the continuously running spur gears, thus driving the bevel gears K K, which drive the screw L. The feed can be released instantly by the handle J, or the trip lever M, which is actuated by the dogs at the end of the sliding key N. The stops O O can be set at any desired point, relatively to the lug P, to determine the position at which it is desired to release this feed.

The feed of table, 25 inches, is automatic in either direction, and can be changed by a simple movement of a lever on the front of the saddle, and as it is driven from the centre it can be used with table clamped at any angle, to 45 degrees, to the axis of the spindle. There are sixteen changes of feed obtained by transposing the feed-cone pulleys, held in place by knurled nuts, varying from .003 inch to .302 inch to one revolution of the spindle. The table may be moved by hand from either end, as at each end a handle is provided for this purpose.

Adjustable dials, graduated to read to thousandths of an inch, indicate the longitudinal, transverse, and vertical movements of table, and a series of graduations show in degrees the angle to the axis of the spindle at which the table is set. The dials may be adjusted without the aid of wrench or screw-driver.

The spiral head has indexing mechanism, by which the periphery of a piece of work may be divided into equal parts, and the velocity of the rotary motion of its spindle, or of the work, relative to the speed of the feed screw, is regulated by change gears at the end of the table. Any spiral, of the sixty-eight provided for, may be cut without interfering with the divisions obtainable from the index plates sent with the machine. A plate for rapid indexing of work into twenty-four or less divisions is placed directly on the spindle, and the worm which turns the spindle may be thrown quickly out of gear by a knurled knob on the back of the spiral head to allow for this direct or plain indexing. The spindle of the spiral head may be moved continuously, or through any required portion of a revolution. The spiral head may be set at any angle on the table by use of the raising block. The front end of the spindle has a No. 11 taper hole and is threaded.

The head can be set and rigidly clamped, at any angle between 10 degrees below the horizontal and 10 degrees beyond the perpendicular. The side of the spiral head is graduated in degrees to show the angle of the elevation of the spindle. The spiral head and footstock centres swing 12 inches in diameter, and take 21 inches in length.

The footstock spindle may be raised vertically, and set at an angle in a vertical plane. By this arrangement the spiral head and footstock spindles may, in ordinary use, be kept in line when the front of the spiral head spindle has been elevated or depressed.

The frame is hollow, and fitted as a closet to hold the small parts that accompany the machine. On the left side of the frame there is a pan for holding small tools, etc., and on the front of this there is a rack for wrenches. On the other side of the frame is a shelf for holding the spiral head and vice when they are not in use. The vice swivels and has a graduated base. The jaws are 6⅛ inches wide, 1 7/16 inches deep, and will open 3⅝ inches.

The countershaft has friction pulleys 16 inches in diameter for 4-inch belts, and should run about 175 revolutions per minute.

A No. 2 universal milling machine, 20½ inches by 6½ inches by

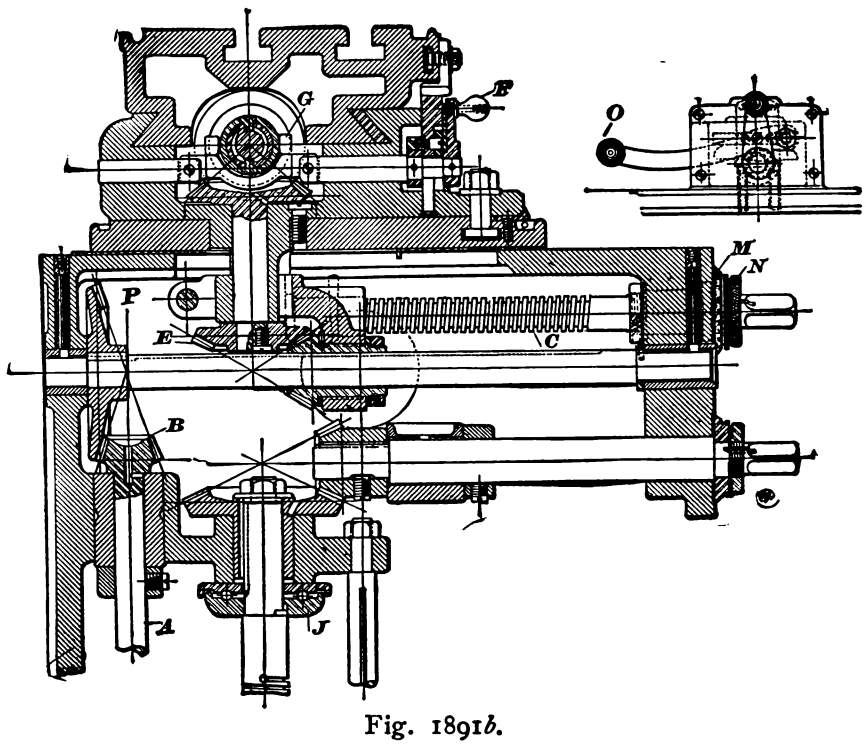

Fig. 1891*b*.

17½ inches, designed and constructed by Brown & Sharpe, is illustrated in Figs. 1891 to 1891*c*.

This machine is well adapted for tool-room and tool-making purposes, where a more rigid, but not necessarily larger, machine is required than the No. 1 universal milling machine, or when saws and cutters of a comparatively large diameter are to be used.

The machine is the smallest of the universal milling machines constructed with back gears, and in the main is similar to the No. 1. The principal differences, aside from the necessary changes in design by the application of back gears, are the details of the automatic feed, spiral head, and footstock. A perspective view of the machine is shown in Fig. 1891, and a cross section view in Fig. 1891*a*.

The spindle has a hole 3/32 inch in diameter its entire length, and at the front end a No. 10 taper hole. The spindle is ground and lapped and runs in bronze boxes that are adjustable. The front box can be tightened by the nut A, Fig. 1891*a*, which brings the shoulder of the collar against washers on front of the frame. The rear box is adjusted by the nut C; the front end of spindle is threaded, and is provided with a guard nut D, which protects the thread when not in use. The cone has three steps, the largest 10 inches in diameter, for 3-inch belt, and is back geared, giving six changes of speed. The gears are covered.

The overhanging arm has an adjustable centre, and can be easily reversed to receive an attachment, turned out of the way or removed. The distance from the centre of the spindle to the arm is 5½ inches; greatest distance from end of spindle to centre in arm, 14 inches.

The table, including oil pans and channels, is 35½ inches long, 8 inches wide, has a working surface 32 inches by 8 inches, and

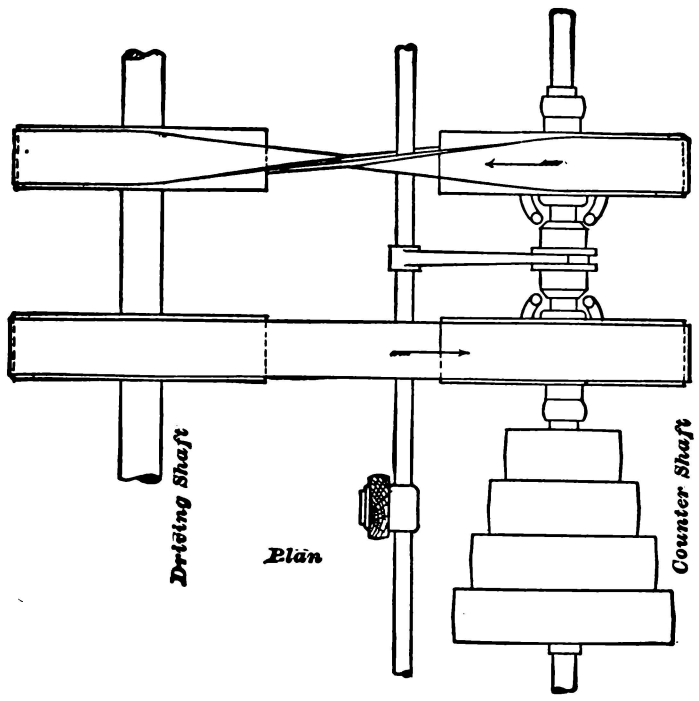

Fig. 1886.

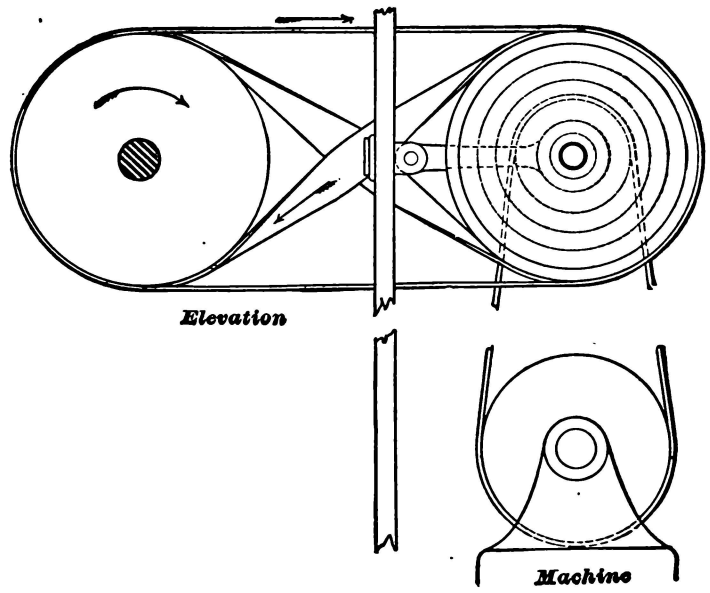

Fig. 1887.

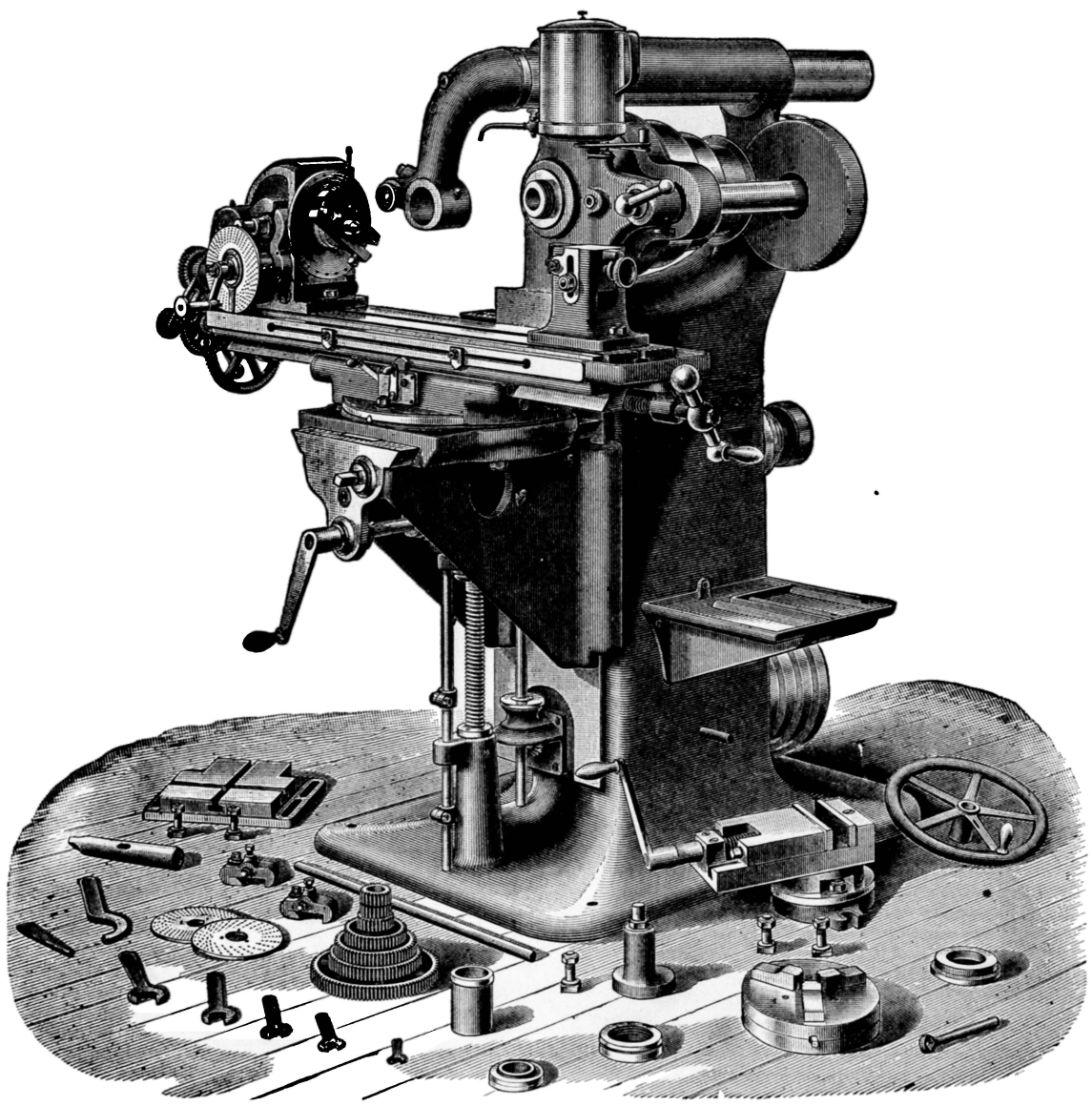

Fig. 1888.

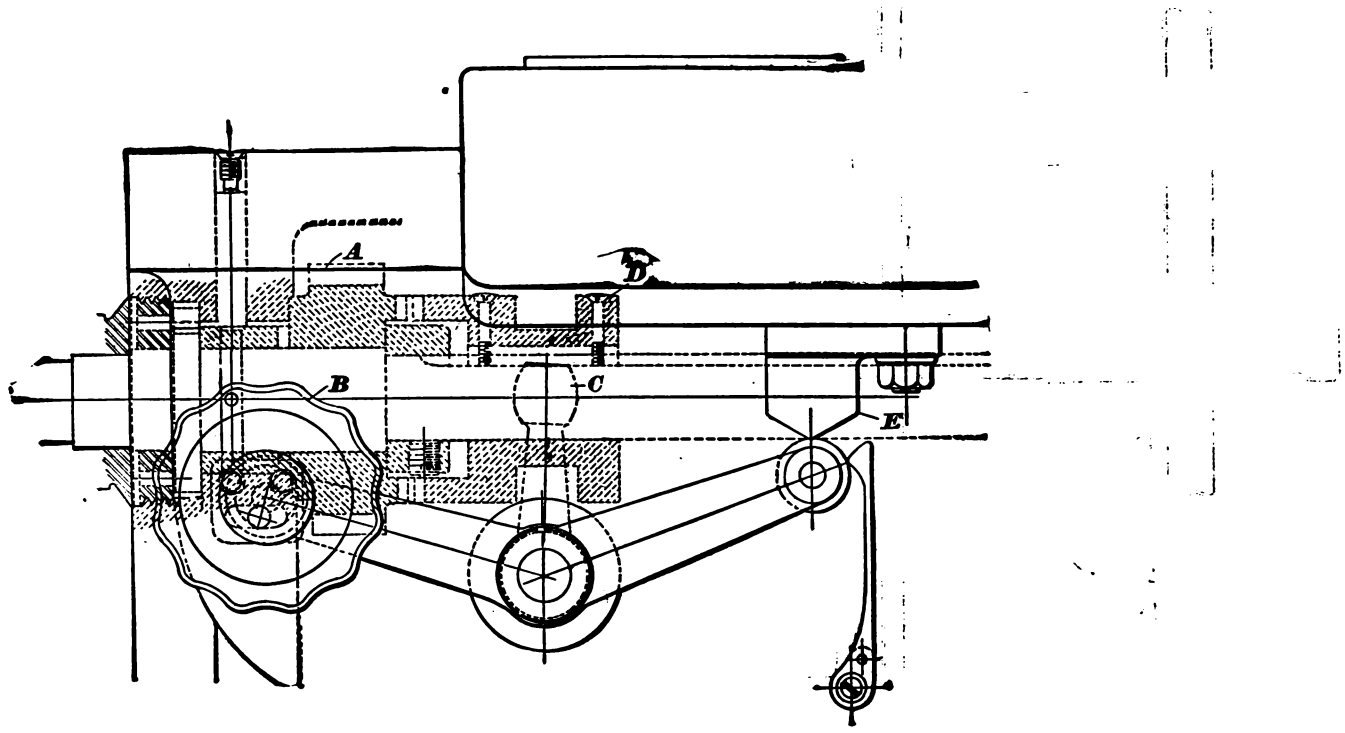

Fig. 1889.

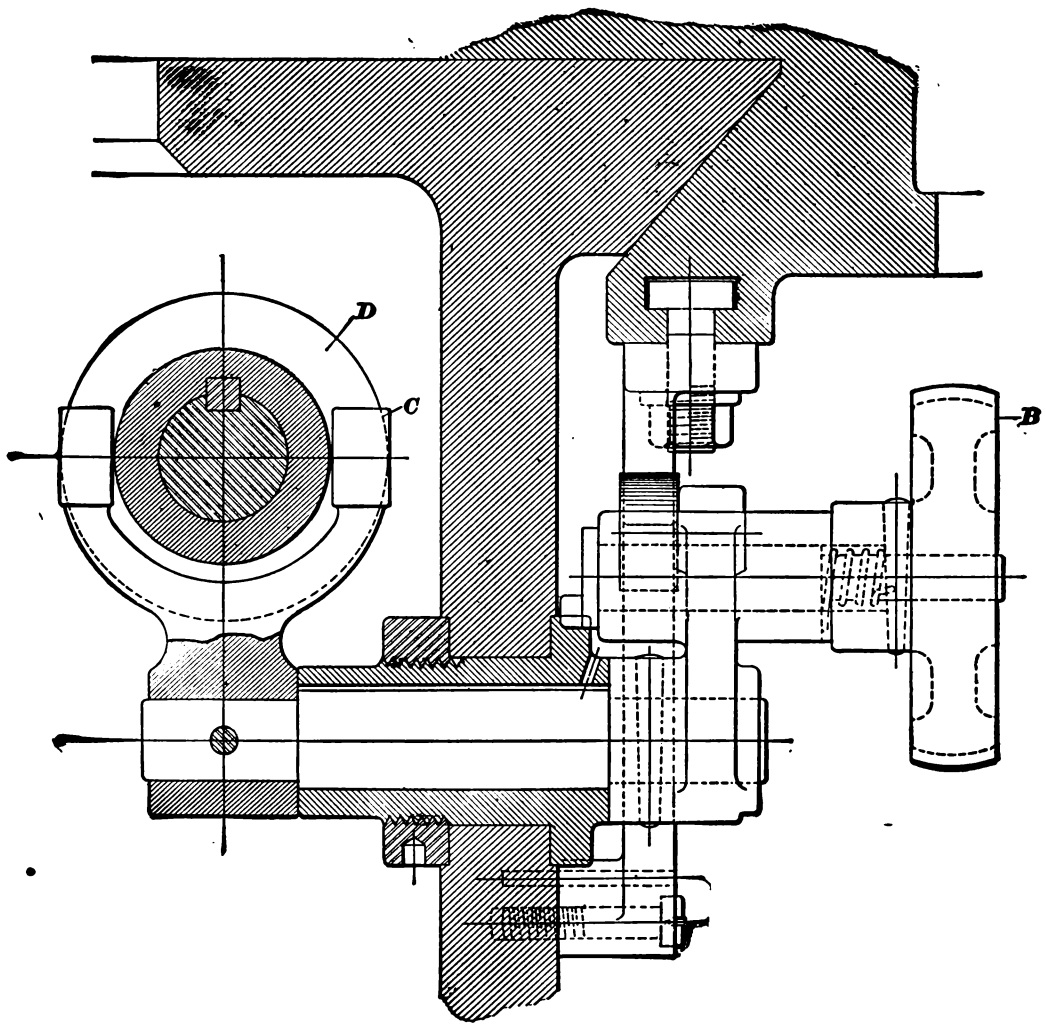

Fig. 1890.

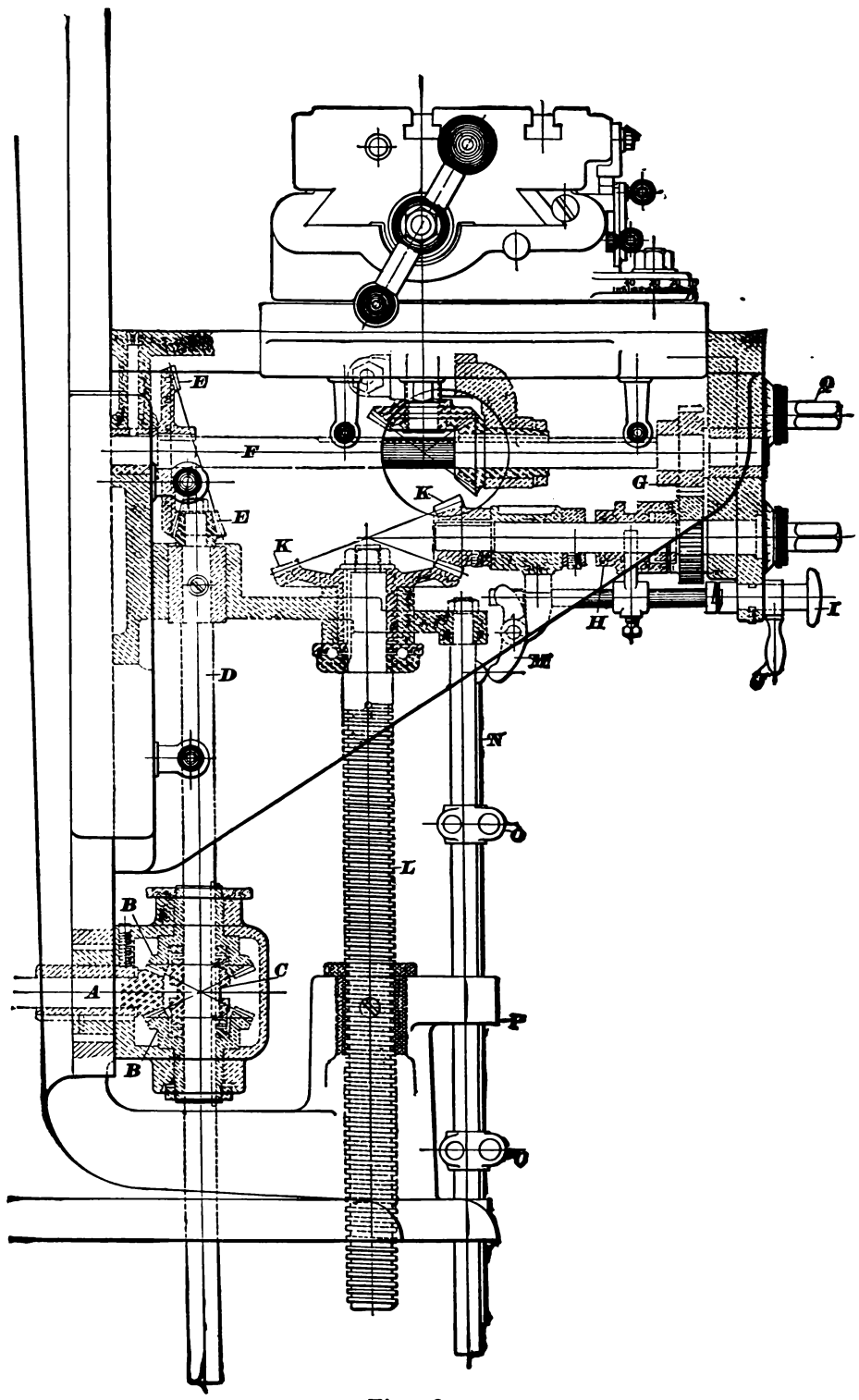

Fig. 1890a.

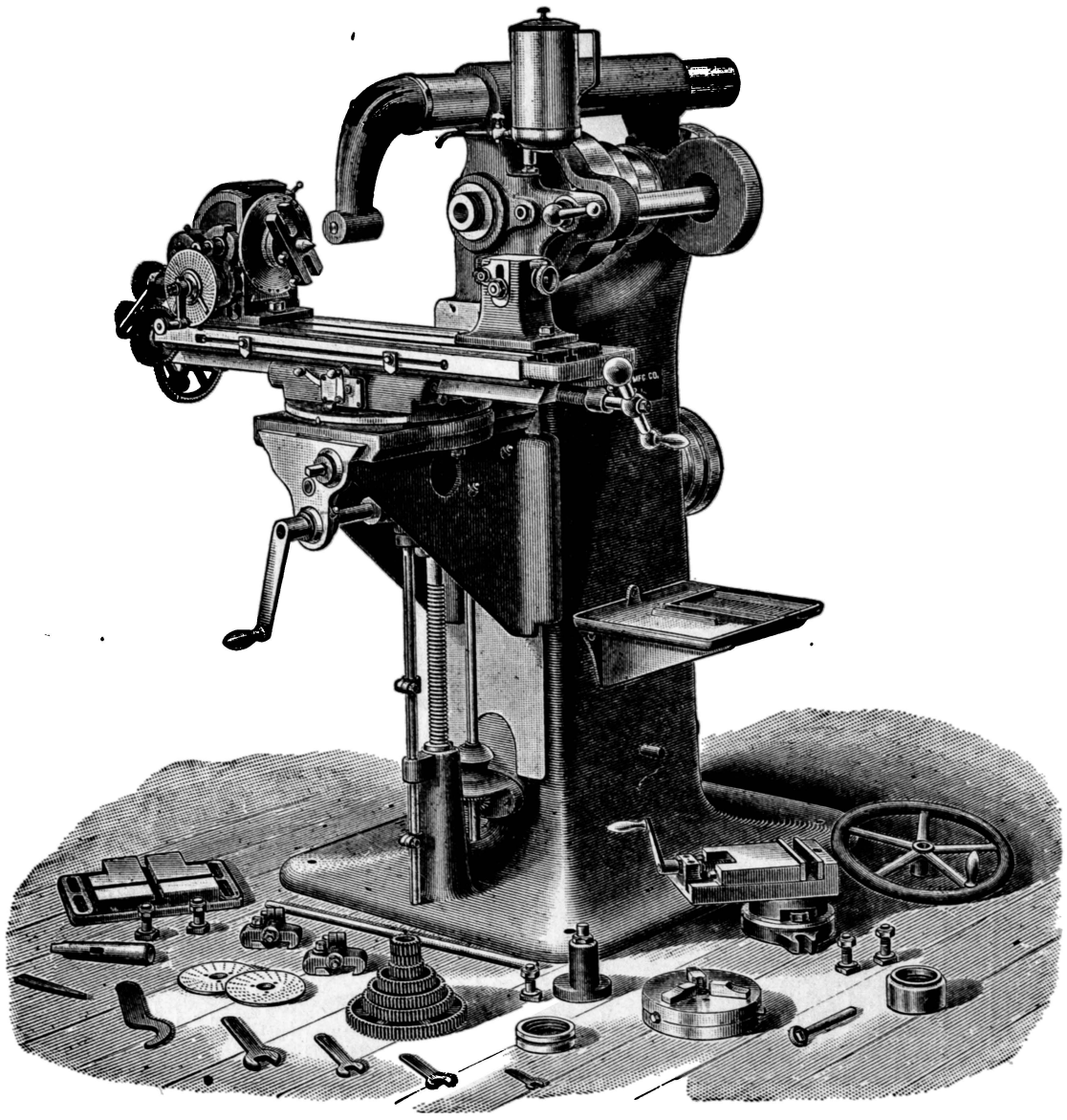

Fig. 1891.

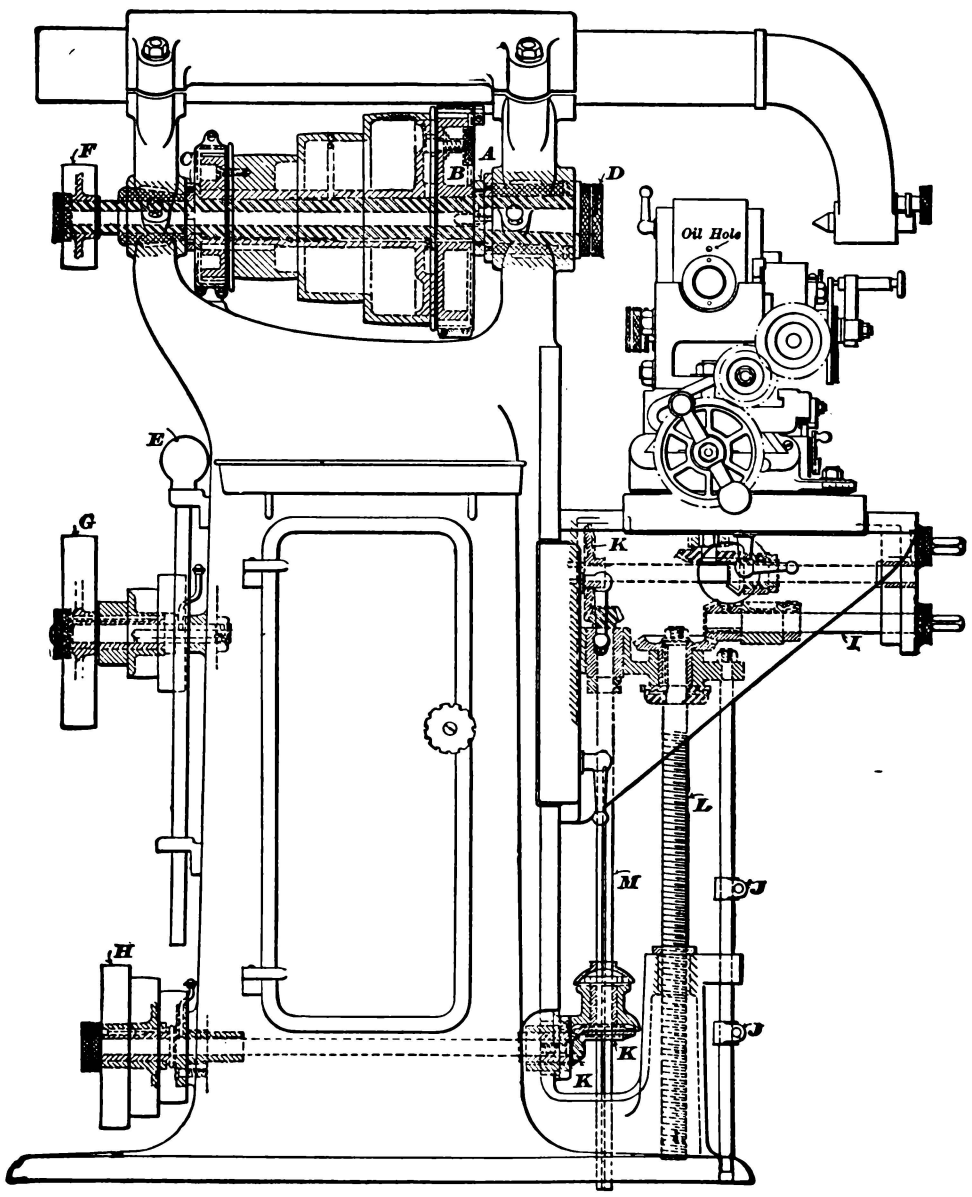

Fig. 1891*a*.

two T-slots $\frac{5}{8}$ inch wide. By means of the shaft C, Fig. 1891*b*, it can be moved transversely $6\frac{1}{2}$ inches. One revolution of the shaft moves the table .2 inch.

The saddle, which carries the table, pivots in the clamp bed, and is rigidly clamped to it by three bolts which slide in circular slots and allow the table to be set at any angle to 45 degrees, each way from zero. The saddle and knee are clamped by fixed handles, thus dispensing with wrenches.

The knee can be moved so that the top of the table will be $17\frac{1}{2}$ inches from the centre of spindle at its lowest point. One revolution of the crank moves the table .1 inch. The knee rests on ball bearings, as shown at J, Fig. 1891*b*, which allow it to be easily moved. The stop rod has sliding collars J J, Fig. 1891*a*, which can be readily set when it is desired to limit movement of the knee.

The feed of table, $20\frac{1}{2}$ inches, is automatic in either direction, and can be changed by a simple movement of a lever on the front of the saddle, and as it is driven from the centre it can be used with table clamped at any angle, to 45 degrees, to the axis of the spindle. The feed is driven from the feed cones through bevel gears by the shaft A, Fig. 1891*b*, through the bevel gear B to shaft carrying bevel gear P, then through bevel gear E on lower end of vertical shaft. The clutch G is operated by lever F. An automatic stop is provided to release the feed at any point when running in either direction. The auxiliary lever O allows the feed to

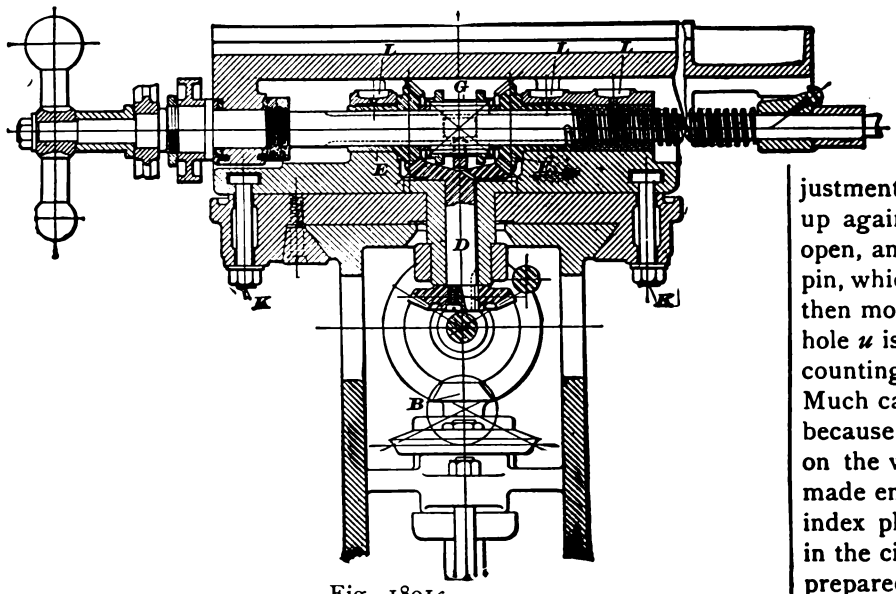

Fig. 1891*c*.

be released by hand, and as it can only be moved in one direction there is never any doubt as to how to proceed in releasing feed, when table is being fed in either direction. The table may be moved by hand from either end, as a handle is provided at each end for this purpose. Twelve changes of feed may be obtained by transposing the feed cone pulleys F, G, H, Fig. 1891*a*, held in place by knurled nuts, giving a variation of feeds from .005 inch to .12 inch to one revolution of spindle.

Adjustable dials, graduated to read to thousandths of an inch, indicate the longitudinal, transverse, and vertical movements of table, and a series of graduations show in degrees the angle to the axis of the spindle at which the table is set. The dials may be adjusted without the aid of wrench or screw-driver.

The spiral head furnished with the Nos. 2, 3, and 4 designs of 1893 universal milling machines, presents special features in that the form admits of the body's being clamped as solidly in one position as in another by two bolts which are placed in a convenient position on the side, and also that when the spindle is at an angle of 90 degrees with the bed the end of the spindle is comparatively low, thus making it very rigid in this position. In doing many kinds of work, as in cutting the flutes in reamers, end mills, etc., the use of the worm and worm wheel can be dispensed with, and indexing done by revolving the spindle by hand.

The motion is transmitted from the feed screw through change gears to two spiral gears. By this arrangement the spindle can be automatically rotated at whatever angle it may be set.

Tables are sent with each machine, giving the change gears for cutting sixty-eight spirals. The tables call for the "gear on worm," the "first gear on stud," which means the first gear placed on stud, "the second gear on stud," or second gear placed on stud, and the "gear on screw."

When it is desired to rotate the spindle independently of the worm and worm wheel, the worm A, Fig. 1891*b*, is arranged so that it may be thrown out of gear with the worm wheel B, when the spindle may be turned by hand and locked by the index plate C and pin D. An additional clamp is provided to hold the spindle, so that the strain will not come on the index pin and plate.

To throw the worm out of gear, turn the knob E (by means of the pin wrench) about a quarter of a revolution in the reverse direction to that indicated by the arrow stamped on knob E; this will loosen nut G, which holds eccentric bushing H; then turn at the same time both knobs E and F, and the eccentric bushing H will be revolved and the worm disengaged from the worm-wheel.

To replace the worm, turn the knobs E and F in the direction marked by the arrow, and tighten the knob E with the pin wrench.

To indicate the amount of rotation of I, Fig. 1892, without counting the number of holes, a sector N N′ (Figs. 1891*d* and 1891*e*) is employed, it having two arms which may be opened apart or closed together, so as to embrace any given number of holes on the required circle. The sector arms N and N′ are held to the face of the index plate by the friction of a spring. The surface of the index plate is provided with rings of holes marked respectively 20, 19, 18, etc., the holes in each ring or circle being equidistantly spaced, as shown in Figs. 1891*d* and 1891*e*.

As shown in the cuts, the arms embrace one quarter of the circle of 20, there being five divisions between the holes S and *t*. The screw W secures them in their adjustment apart. Suppose that a pin is in S, and arm N′ is moved up against it, the arm N leaves the fifth hole from S, marked *t*, open, and indicates that *t* is the next hole for the insertion of the pin, which is withdrawn from S, and placed in *t*, and the arms are then moved into the position shown in Fig. 1891*e*, indicating that hole *u* is the next one for the pin. This obviates the necessity of counting the holes, and prevents liability to error in the counting. Much care must, however, be exercised in spacing the arms N N′, because any error made in spacing the arms will be repeated on the work each time the sector is used, and thereby the work made entirely useless for any purpose whatever. Three of these index plates are provided, each having different numbers of holes in the circles, and in the following tables are given those specially prepared for use in cutting the teeth of gear wheels.

No. of teeth.	Index circle.	No. of turns of index.	No. of teeth.	Index circle.	No. of turns of index.
2	ANY	20	35	49	$1\frac{7}{49}$
3	39	$13\frac{13}{39}$	36	27	$1\frac{9}{27}$
4	ANY	10	37	37	$1\frac{3}{37}$
5	,,	8	38	19	$1\frac{1}{19}$
6	39	$6\frac{26}{39}$	39	39	$1\frac{1}{39}$
7	49	$5\frac{35}{49}$	40	ANY	1
8	ANY	5	41	41	$\frac{40}{41}$
9	27	$4\frac{12}{27}$	42	21	$\frac{20}{21}$
10	ANY	4	43	43	$\frac{40}{43}$
11	33	$3\frac{21}{33}$	44	33	$\frac{30}{33}$
12	39	$3\frac{18}{39}$	45	27	$\frac{24}{27}$
13	39	$3\frac{3}{39}$	46	23	$\frac{20}{23}$
14	49	$2\frac{42}{49}$	47	47	$\frac{46}{47}$
15	39	$2\frac{28}{39}$	48	18	$\frac{16}{18}$
16	20	$2\frac{10}{20}$	49	49	$\frac{40}{49}$
17	17	$2\frac{6}{17}$	50	20	$\frac{16}{20}$
18	27	$2\frac{6}{27}$	52	39	$\frac{30}{39}$
19	19	$2\frac{2}{19}$	54	27	$\frac{20}{27}$
20	ANY	2	55	33	$\frac{24}{33}$
21	21	$1\frac{19}{21}$	56	49	$\frac{35}{49}$
22	33	$1\frac{27}{33}$	58	29	$\frac{20}{29}$
23	23	$1\frac{17}{23}$	60	39	$\frac{26}{39}$
24	39	$1\frac{26}{39}$	62	31	$\frac{20}{31}$
25	20	$1\frac{12}{20}$	64	16	$\frac{10}{16}$
26	39	$1\frac{21}{39}$	65	39	$\frac{24}{39}$
27	27	$1\frac{12}{27}$	66	33	$\frac{20}{33}$
28	49	$1\frac{21}{49}$	68	17	$\frac{10}{17}$
29	29	$1\frac{11}{29}$	70	49	$\frac{28}{49}$
30	39	$1\frac{13}{39}$	72	27	$\frac{15}{27}$
31	31	$1\frac{9}{31}$	74	37	$\frac{20}{37}$
32	20	$1\frac{6}{20}$	75	15	$\frac{8}{15}$
33	33	$1\frac{7}{33}$	76	19	$\frac{10}{19}$
34	17	$1\frac{5}{17}$	78	39	$\frac{20}{39}$

No. of teeth.	Index circle.	No. of turns of index.	No. of teeth.	Index circle.	No. of turns of index.
80	20	$\frac{10}{20}$	164	41	$\frac{10}{41}$
82	41	$\frac{20}{41}$	165	33	$\frac{8}{33}$
84	21	$\frac{10}{21}$	168	21	$\frac{5}{21}$
85	17	$\frac{8}{17}$	170	17	$\frac{4}{17}$
86	43	$\frac{20}{43}$	172	43	$\frac{10}{43}$
88	33	$\frac{16}{33}$	180	27	$\frac{6}{27}$
90	27	$\frac{12}{27}$	184	23	$\frac{5}{23}$
92	23	$\frac{10}{23}$	185	37	$\frac{8}{37}$
94	47	$\frac{20}{47}$	188	47	$\frac{10}{47}$
95	19	$\frac{8}{19}$	190	19	$\frac{4}{19}$
98	49	$\frac{20}{49}$	195	39	$\frac{8}{39}$
100	20	$\frac{8}{20}$	196	49	$\frac{10}{49}$
104	39	$\frac{16}{39}$	200	20	$\frac{4}{20}$
108	27	$\frac{10}{27}$	205	41	$\frac{8}{41}$
110	33	$\frac{12}{33}$	210	21	$\frac{4}{21}$
115	23	$\frac{8}{23}$	215	43	$\frac{8}{43}$
116	29	$\frac{10}{29}$	216	27	$\frac{5}{27}$
120	39	$\frac{13}{39}$	220	33	$\frac{6}{33}$
124	31	$\frac{10}{31}$	230	23	$\frac{4}{23}$
128	16	$\frac{5}{16}$	232	29	$\frac{5}{29}$
130	39	$\frac{12}{39}$	235	47	$\frac{8}{47}$
132	33	$\frac{10}{33}$	240	18	$\frac{3}{18}$
135	27	$\frac{8}{27}$	245	49	$\frac{8}{49}$
136	17	$\frac{5}{17}$	248	31	$\frac{5}{31}$
140	49	$\frac{14}{49}$	260	39	$\frac{6}{39}$
144	18	$\frac{5}{18}$	264	33	$\frac{5}{33}$
145	29	$\frac{8}{29}$	270	27	$\frac{4}{27}$
148	37	$\frac{10}{37}$	280	49	$\frac{7}{49}$
150	15	$\frac{4}{15}$	290	29	$\frac{4}{29}$
152	19	$\frac{5}{19}$	296	37	$\frac{5}{37}$
155	31	$\frac{8}{31}$	300	15	$\frac{2}{15}$
156	39	$\frac{10}{39}$	310	31	$\frac{4}{31}$
160	20	$\frac{5}{20}$	312	39	$\frac{5}{39}$

The footstock, Fig. 1892, has an adjustable centre; two taper pins, one of which is shown at Z, are used to accurately locate this centre in line with the headstock centre. When it is desirable to set at an angle out of parallel with the base, as in cutting taper reamers, drills, etc., the centre can be elevated or depressed by means of a rack and pinion actuated by the nut U. The centre is firmly held in any position by the nuts W, X, and Y.

The advantage of this is easily appreciated from the fact that by the use of centres that can not be adjusted work is apt to become cramped at certain positions during its revolution, and as a result even spacing cannot always be obtained.

To quickly adjust the footstock centre in line with the spiral head centre, a gauge, consisting of a bushing and a blade, can be used. The bushing fits on a milling arbor, and the lower edge of the blade is the same distance above the centre as the top of the footstock centre. The headstock centre is set at the desired angle and the footstock centre is set so as to be parallel with and touching the edge of the blade. When it is correctly set the work revolves as freely as though both head and footstock centres were parallel with the table. If it is desirable to obtain angles greater than those allowed by the footstock, parallels can be used under the footstock.

The frame is hollow and fitted as a closet to hold the small parts that accompany the machine. On the left side of the frame there is a pan for holding small tools, etc., and on the front of this there is a rack for wrenches. On the other side of the frame is a shelf for holding the spiral head and vice when they are not in use.

The vice swivels and has a graduated base. The jaws are $5\frac{1}{8}$ inches wide, $1\frac{1}{8}$ inches deep, and will open $2\frac{3}{4}$ inches.

The countershaft has two friction pulleys 14 inches in diameter for $3\frac{1}{2}$-inch belts, and should run about 180 revolutions per minute.

ATTACHMENTS FOR MILLING MACHINES.—(For Nos. 1, 2, 3, and 4 universal, and Nos. 1, 2, and 3 plain milling machines.) Fig. 1, Plate II.–D., represents an attachment for converting the plane of cutter revolution from vertical to horizontal, while at the same time giving a less obstructed view to the cutter, which is on a short vertical spindle driven from the main spindle of the machine through spiral gears. The short vertical cutter spindle can be set at any required angle from a vertical to a horizontal position, the base of the spindle head being graduated for that purpose. It is obvious that the ratios of the spiral gears may be made to increase the speed of the cutter spindle above that of the machine spindle for very light work. A similar device is shown in Fig. 2, Plate II.–D., for Nos. 4 and 5 plain, and No. 4, design 1893, universal milling machines, the horizontal shaft being inserted in the cone spindle of the machine. A circular milling attachment for

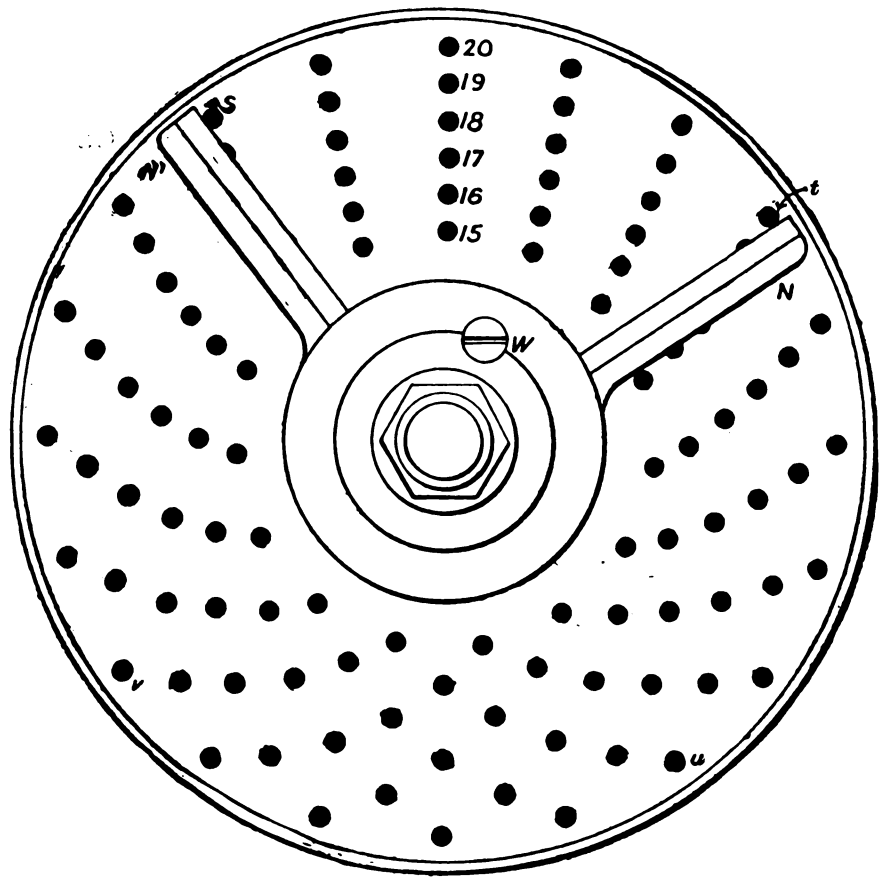

Fig. 1891*d*.

Brown & Sharpe's No. 2 vertical spindle milling machine is shown in Fig. 3, Plate II.–D. This attachment is of service in milling circles, segments of circles, circular slots, etc., on either plain or irregular shaped pieces. It is bolted securely to the table of the machine and can be adjusted to any desired position. A high-speed milling attachment for Nos. 1 and 2 universal, and Nos. 1 and 2 plain milling machines is illustrated in Figs. 4 and 5, Plate II.–D. It is used for light or finishing cuts within mills. The driving fixture shown in Fig. 4 consists of a cast-iron arm that can be placed in a milling machine in the place of the overhanging arm, and can be applied without additional overhead works.

There is a shaft running in the upper end that has a pulley on each end of it. The pulley on the back is to be belted to the front step of the cone of the machine. The front pulley is to be belted to the fixture that is to be placed in the taper hole of the spindle. The advantage of this method of belting is that the steps of the cone pulley are free to be run in the usual manner, and thus different speeds can be obtained for the end mill.

On the No. 1 universal and No. 1 plain milling machines there are four changes of speed, from 342 to 1,537 revolutions per minute, and on the No. 2 universal and No. 2 plain milling machines there are three changes of speed, from 603 to 1,584 revolutions per minute.

When it is desired to plane a form with a fly tool, and a quick feed is required for the table, the fixture is reversed so that the larger pulley can be belted to the feed pulley of the machine, and the fixture driven directly from the countershaft. This method of application gives the necessary motion to the table without running the spindle of the machine which holds the fly tool.

Taper Milling Attachment for Nos. 1 and 2 Universal Milling Machines.—This attachment, Fig. 6, Plate II.–D., is designed to facilitate the milling of taper work. By reason of its easy and quick adjustment to the desired taper it is especially desirable when a large variety of such work is to be done. It consists of a table that is suspended on a ring, which in turn is placed on an arbor to fit the taper hole in the spiral head. The head can be set to any desired angle to 10 degrees, and the table will take the same position, keeping the centres always in line. When placed at the required angle it is held in position by a clamp screw

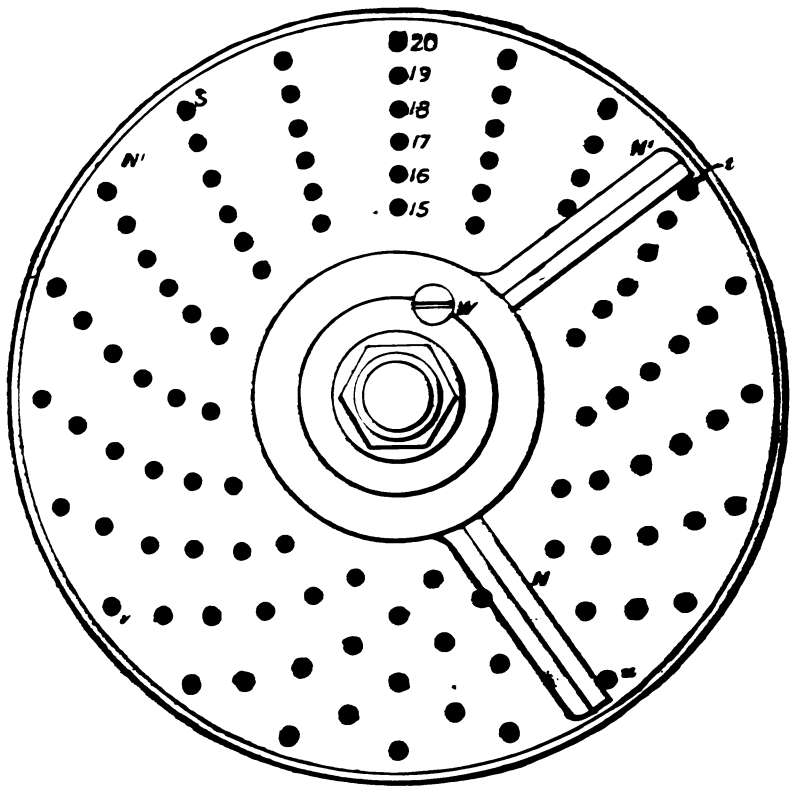

Fig. 1891c.

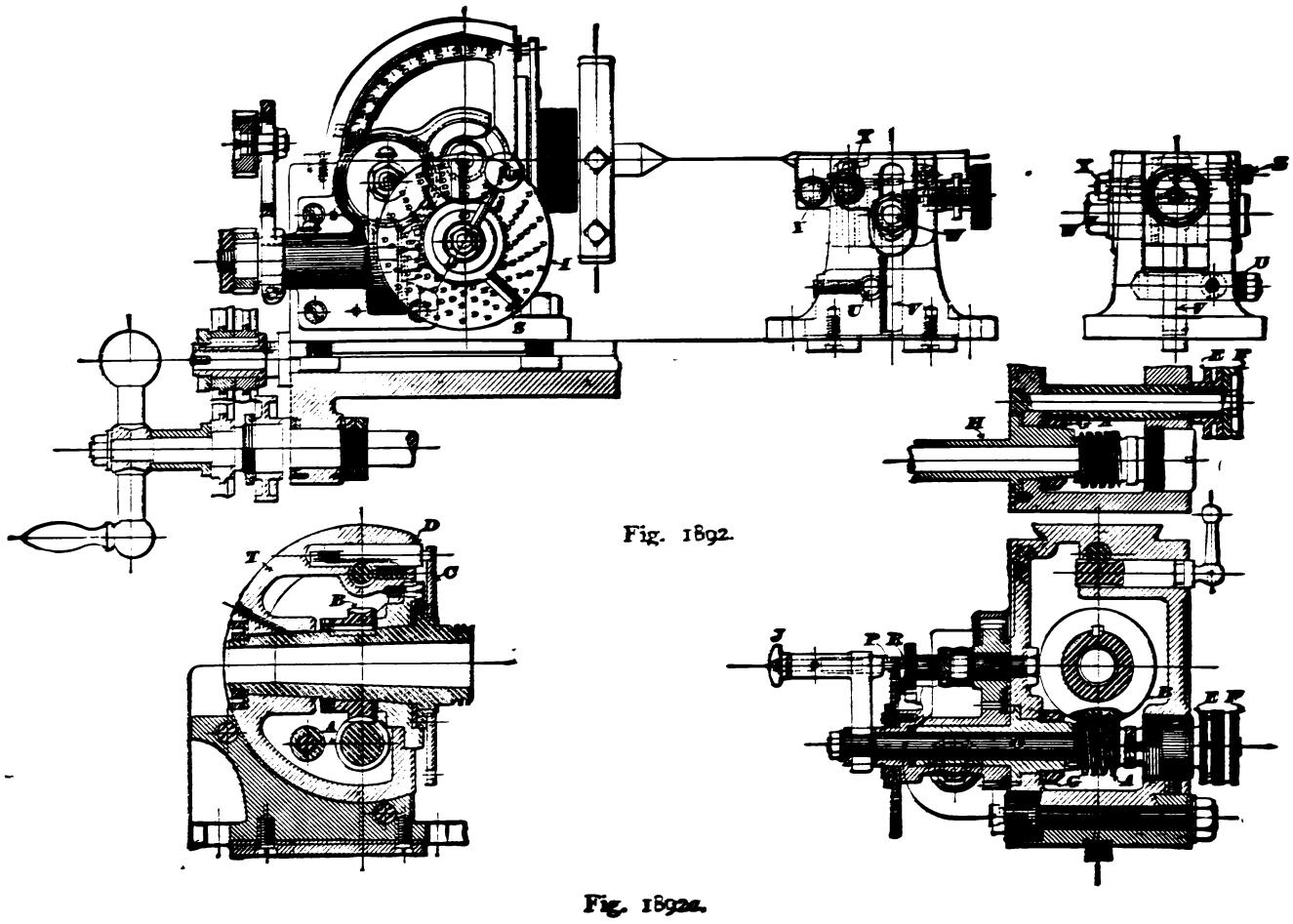

Fig. 1892.

Fig. 1892a.

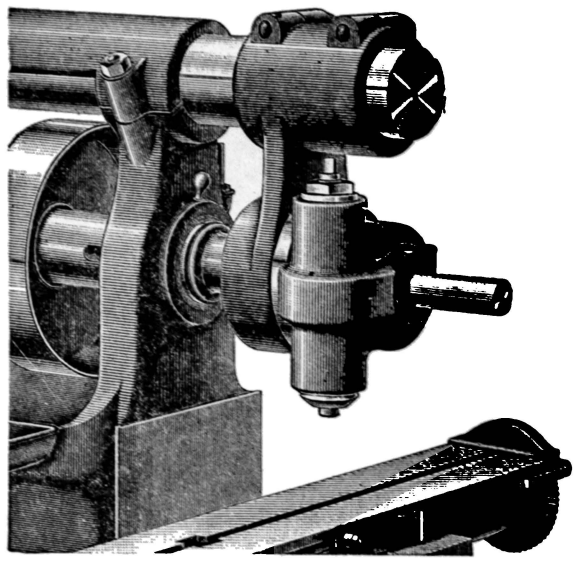

Fig. 1.

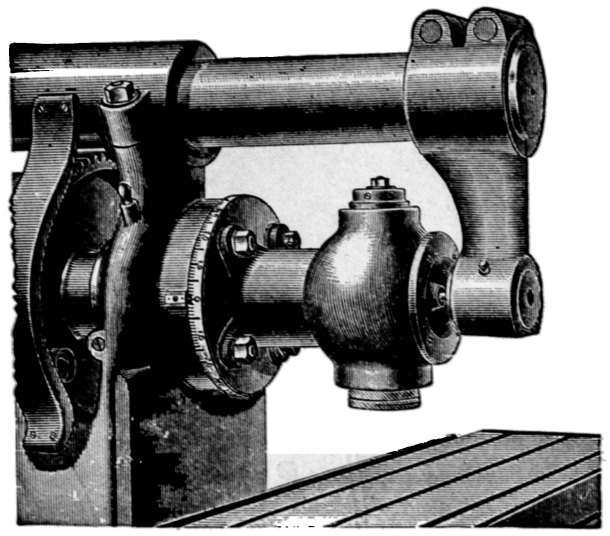

Fig. 2.

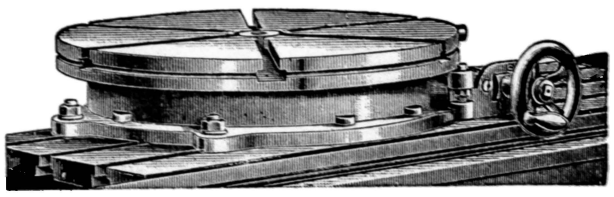

Fig. 3.

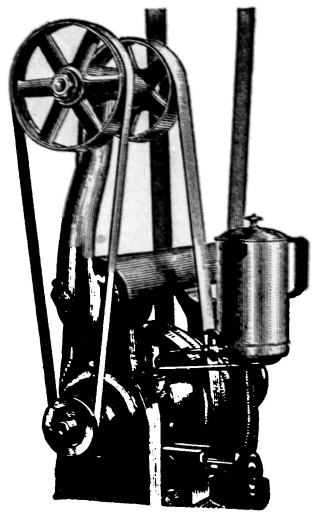

Fig. 4.

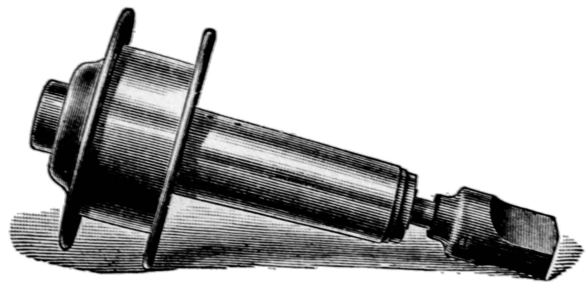

Fig. 5.

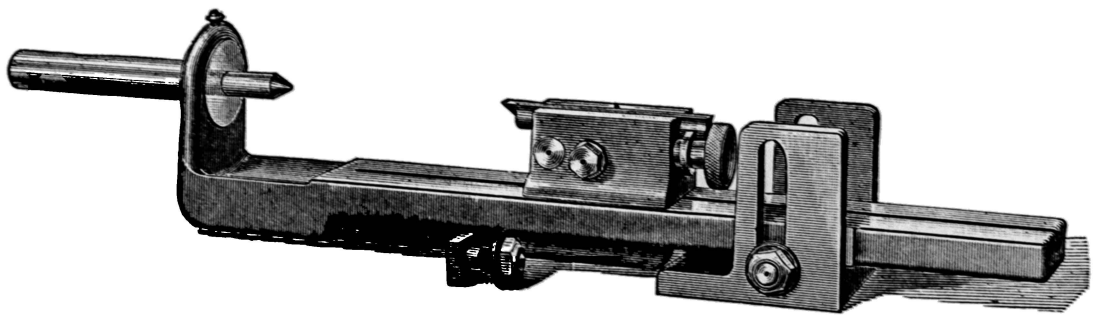

Fig. 6.

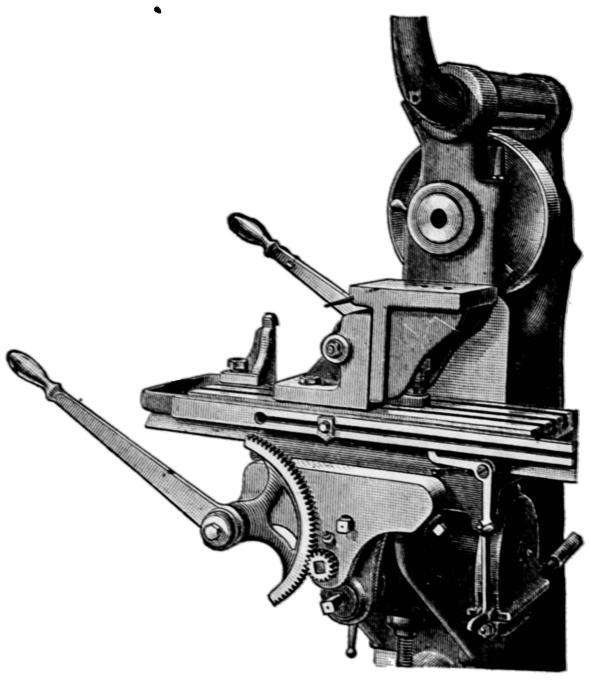

Fig. 7.

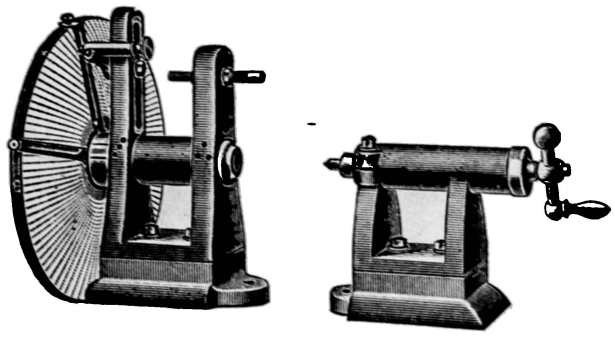

Fig. 8.

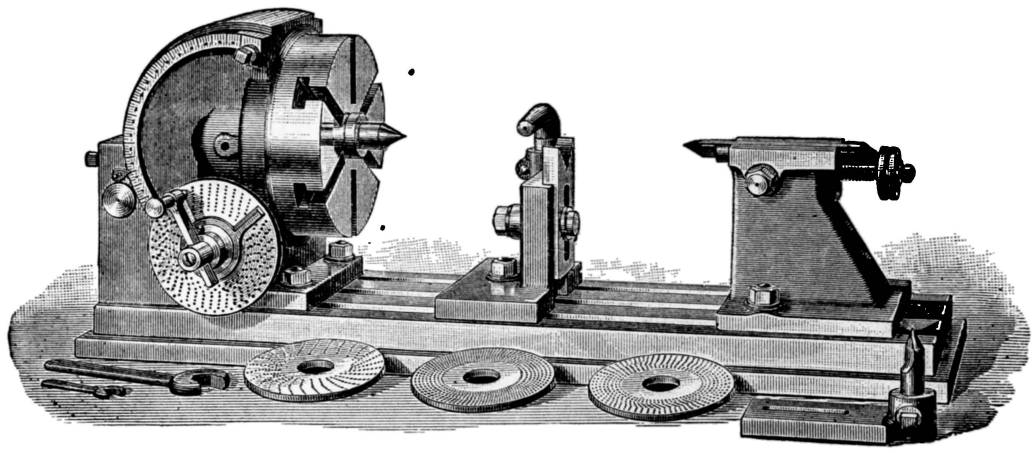

Fig. 10.

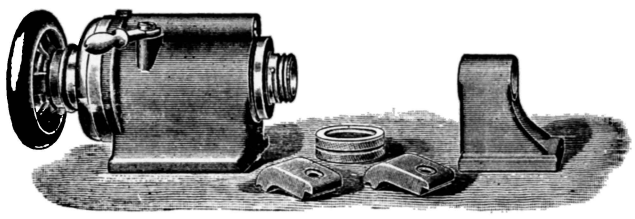

Fig. 9.

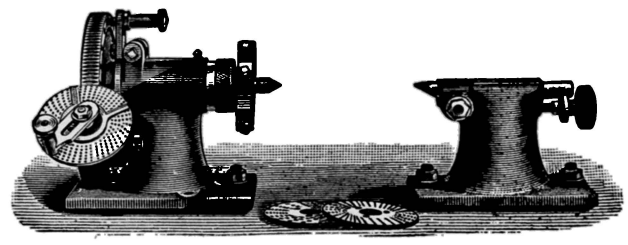

Fig. 11.

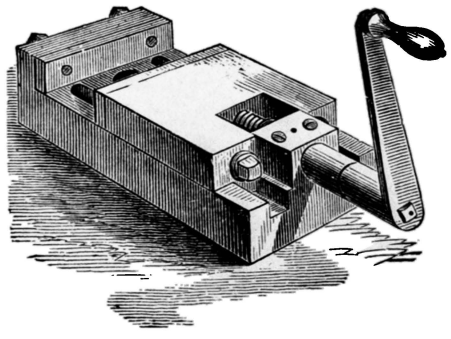

Fig. 12.

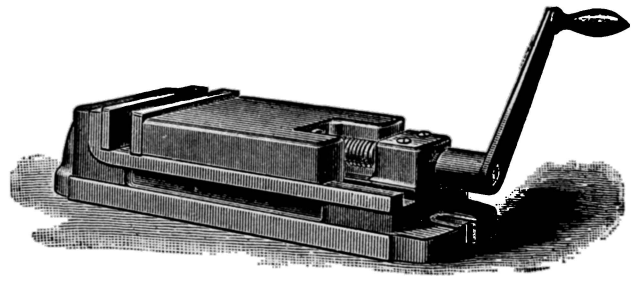

Fig. 13.

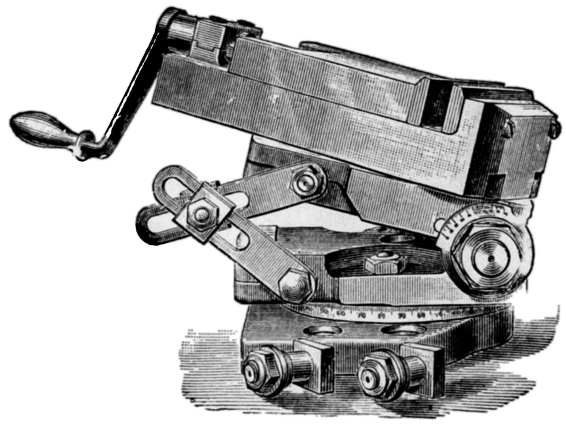

Fig. 14.

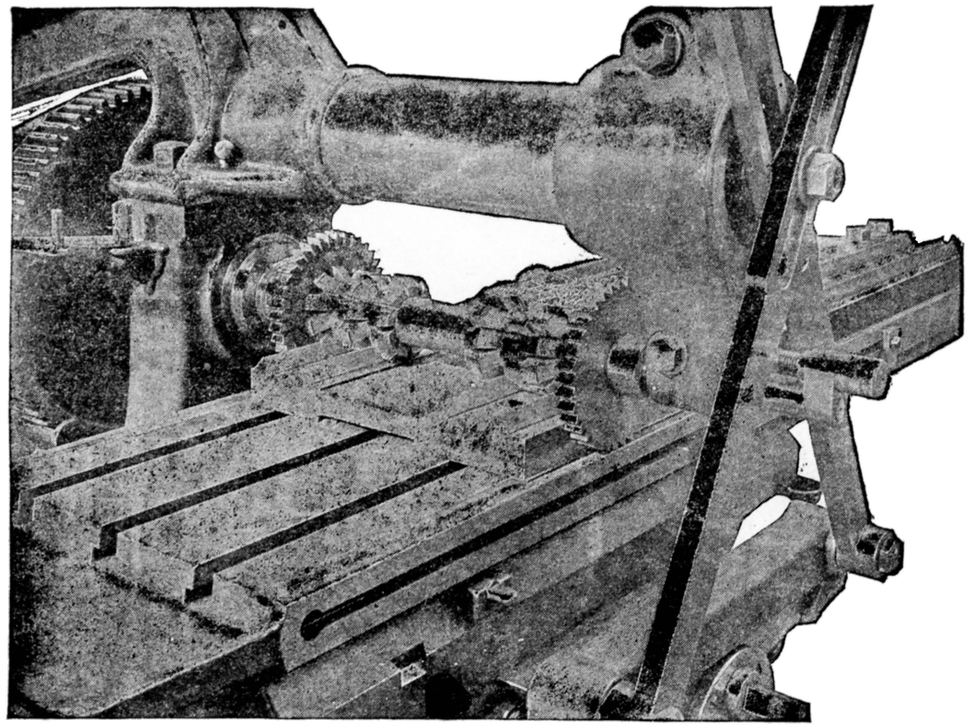

Fig. 1.

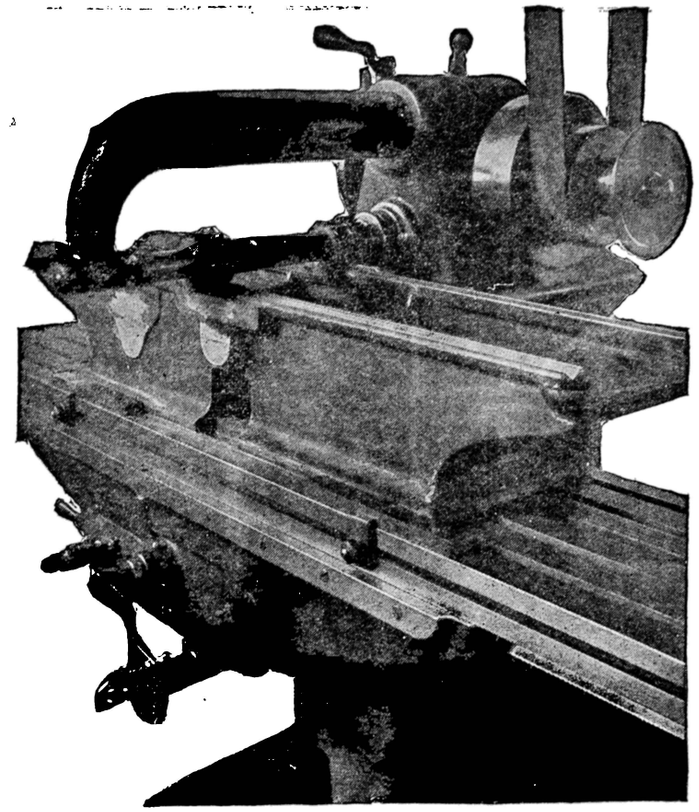

Fig. 2.

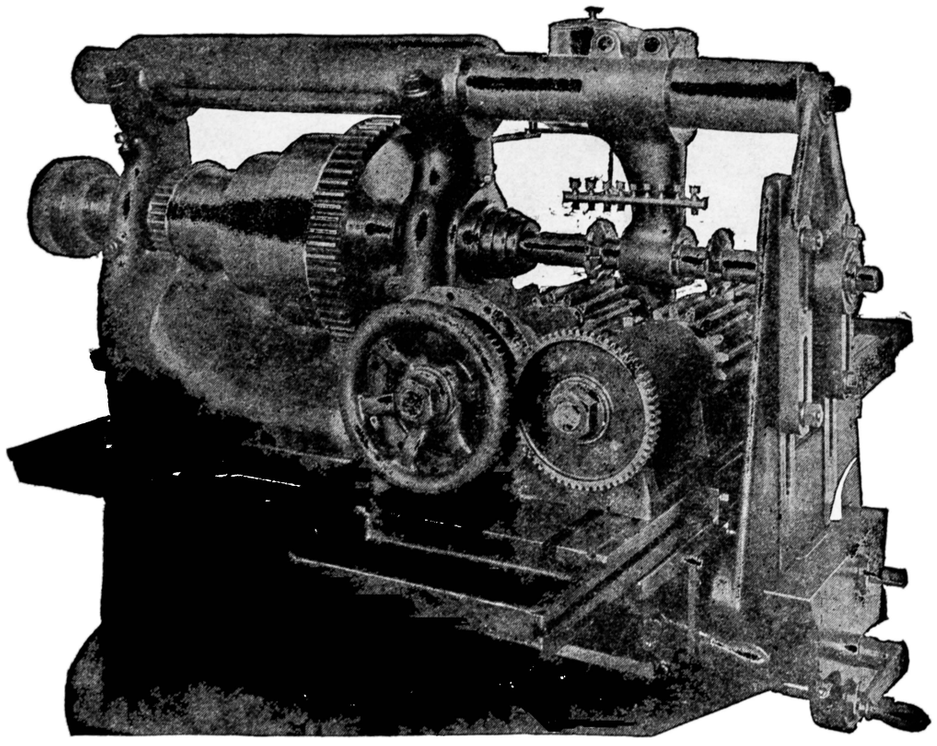

Fig. 3.

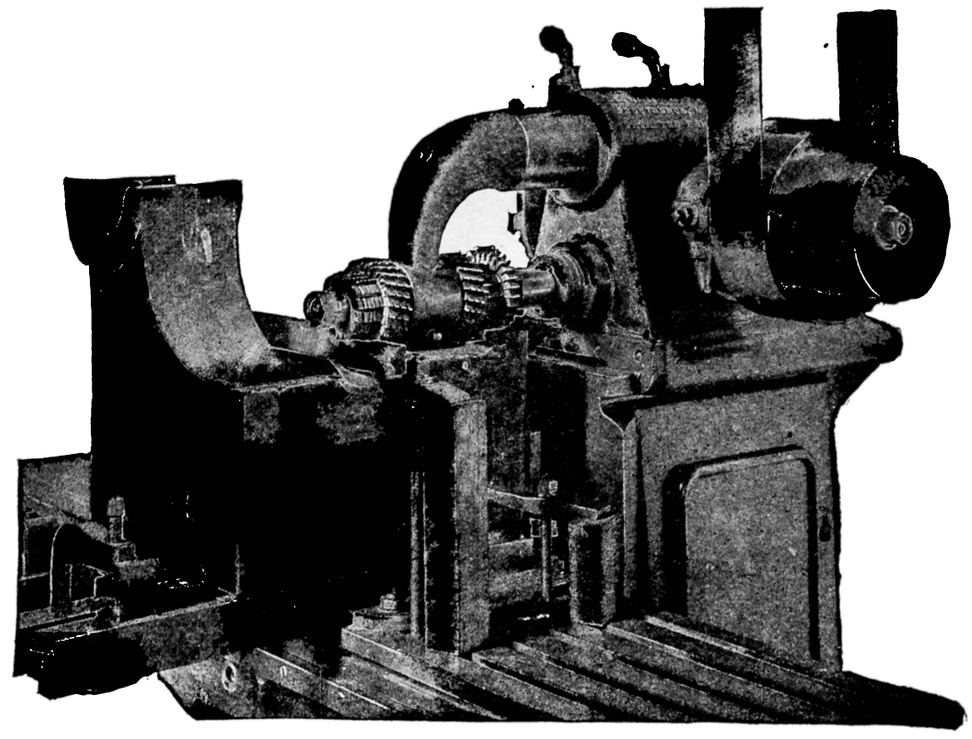

Fig. 4.

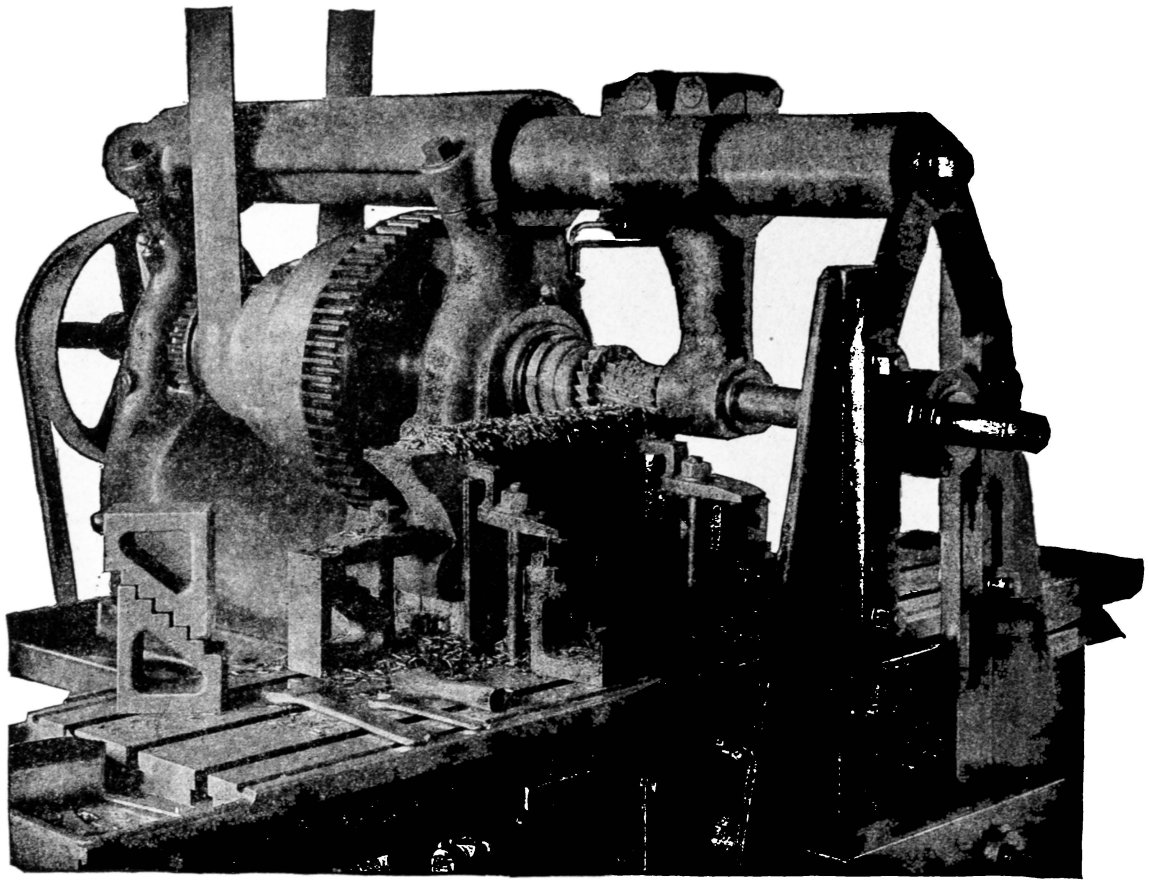

Fig. 1.

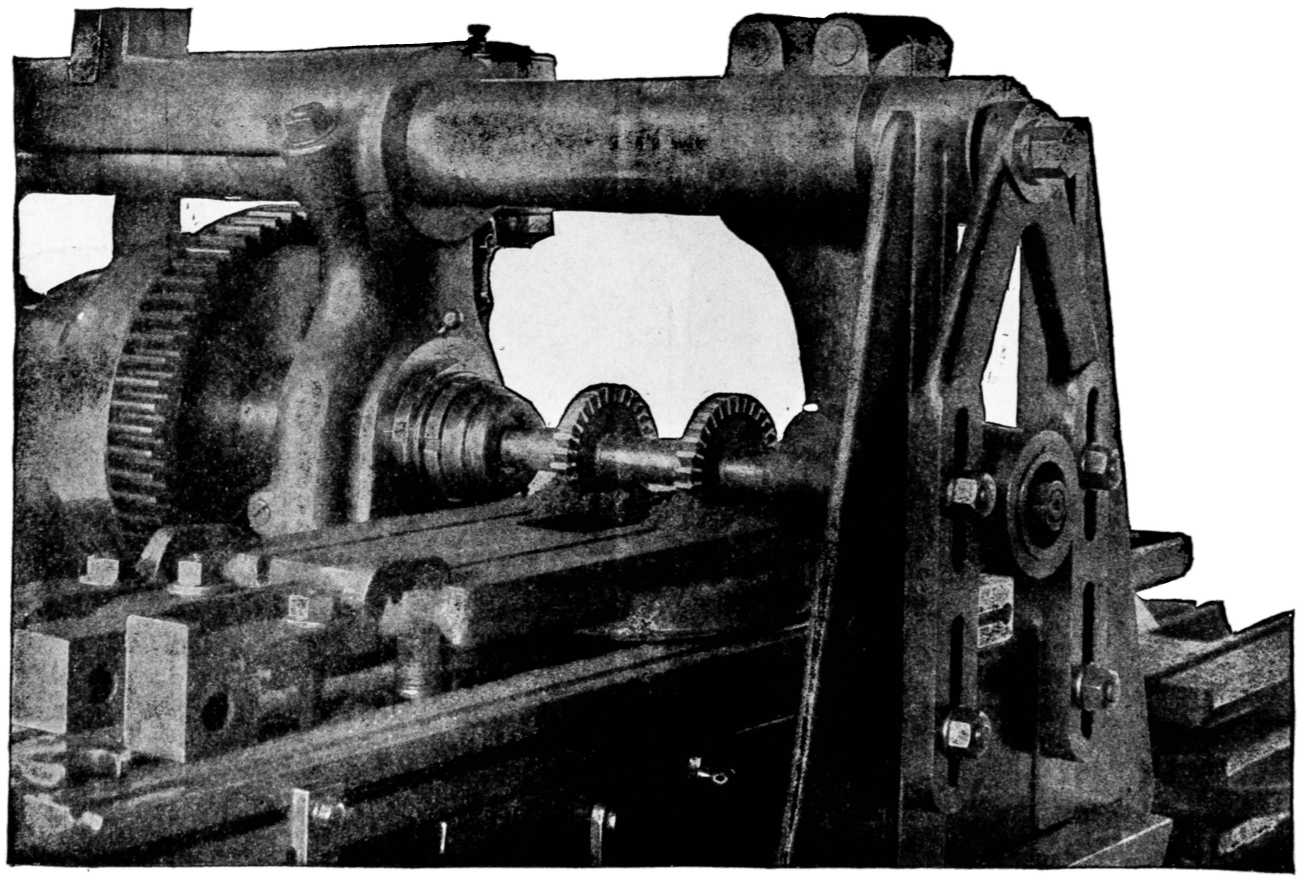

Fig. 2.

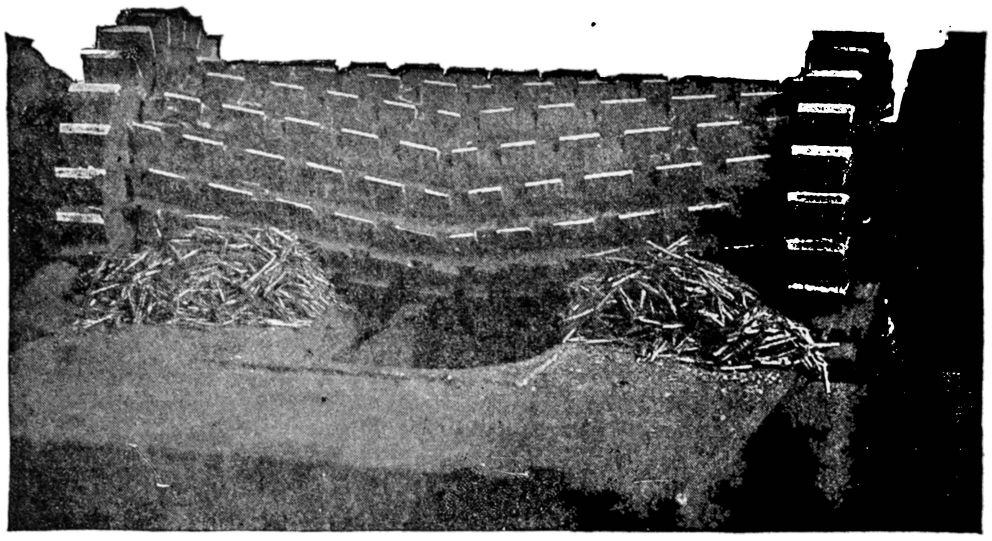

Fig. 1.

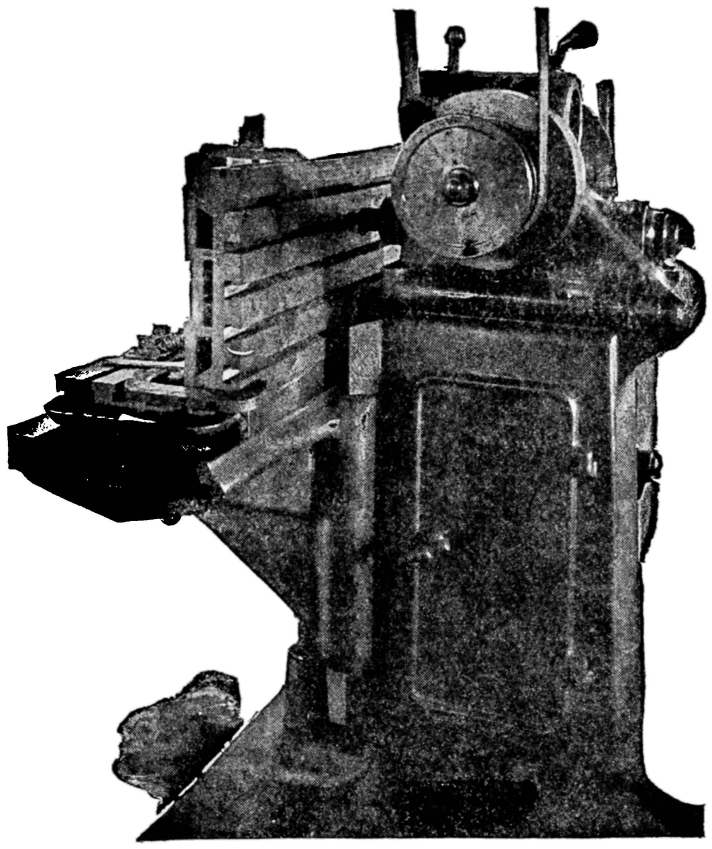

Fig. 2.

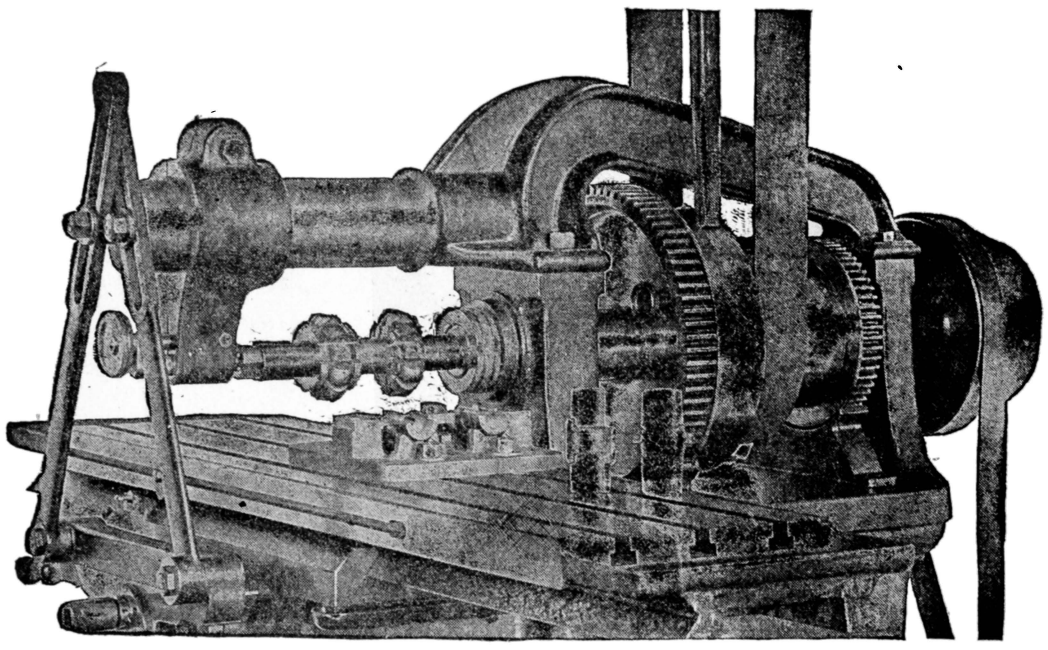

Fig. 3.

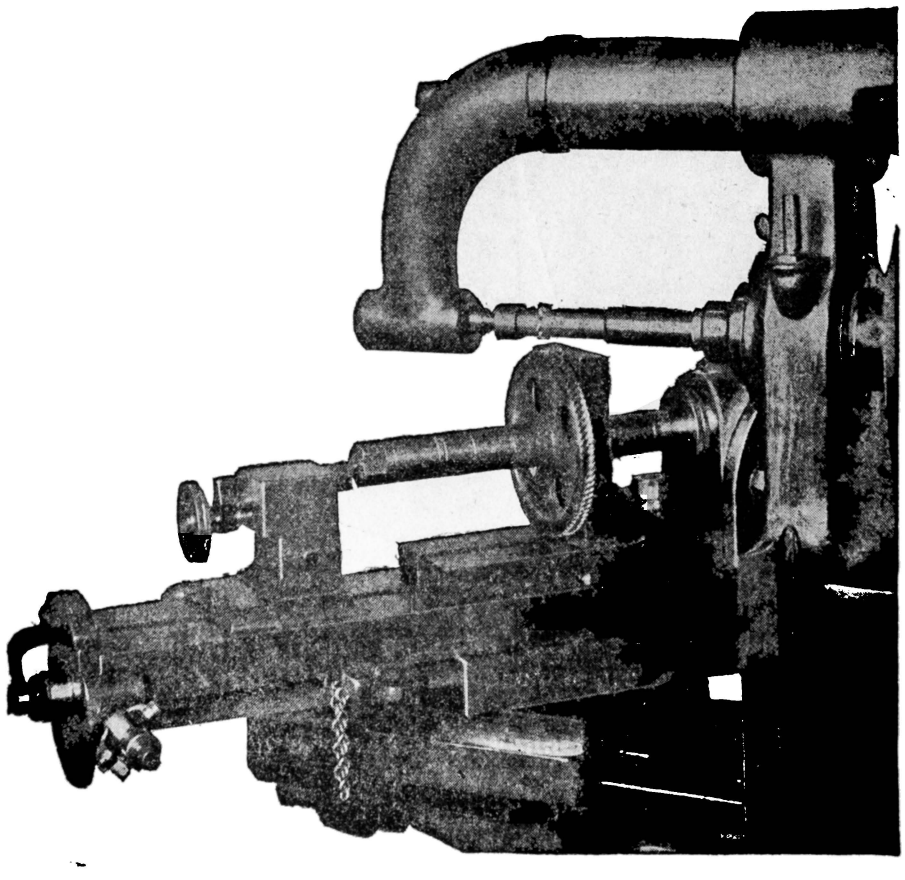

Fig. 4.

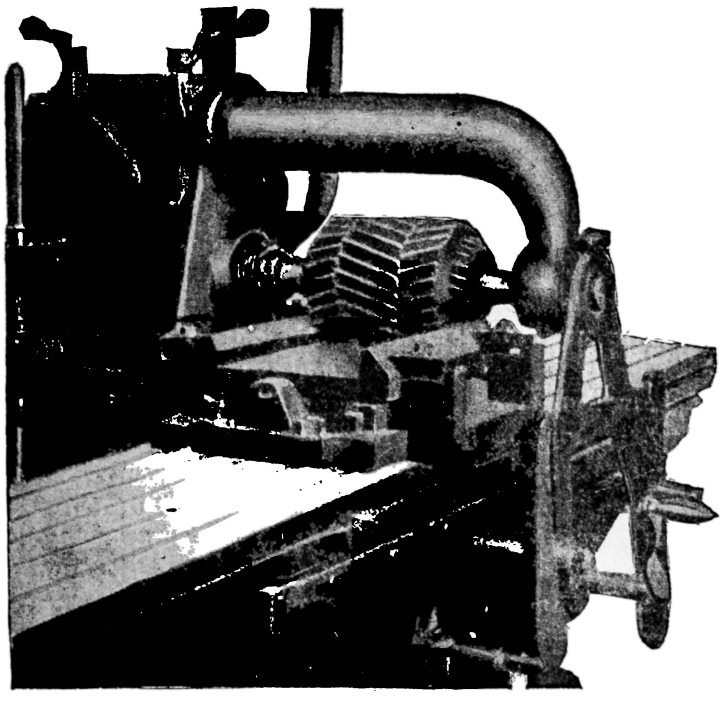

Fig. 5.

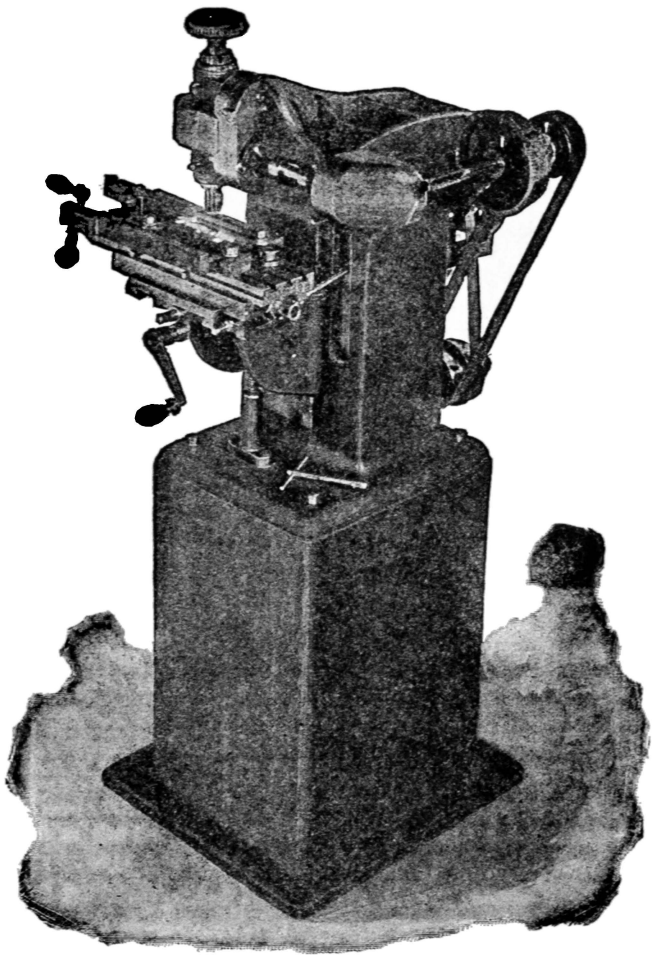

Fig. 1.

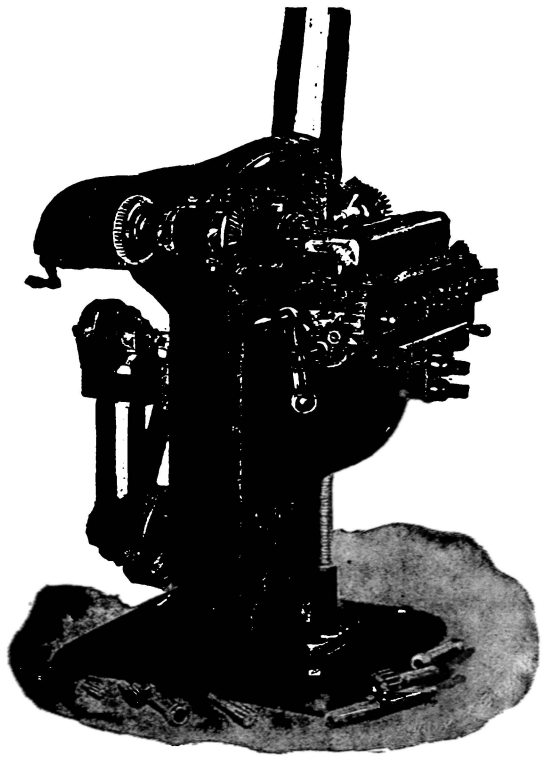

Fig. 2.

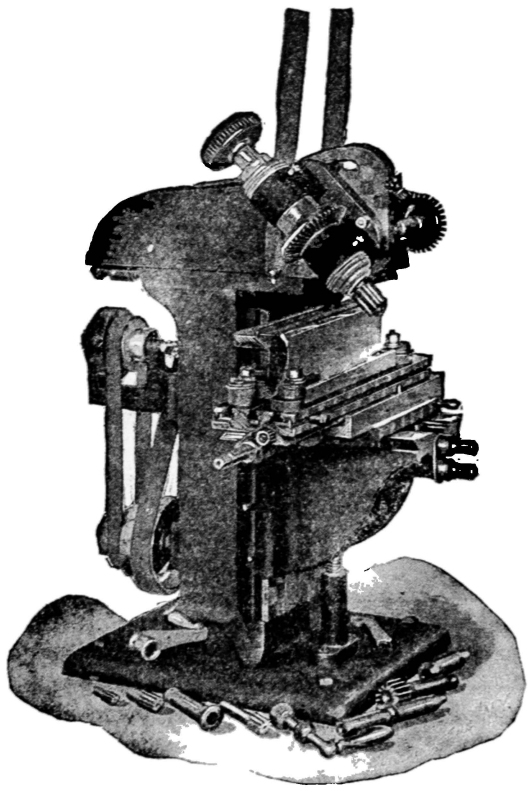

Fig. 3.

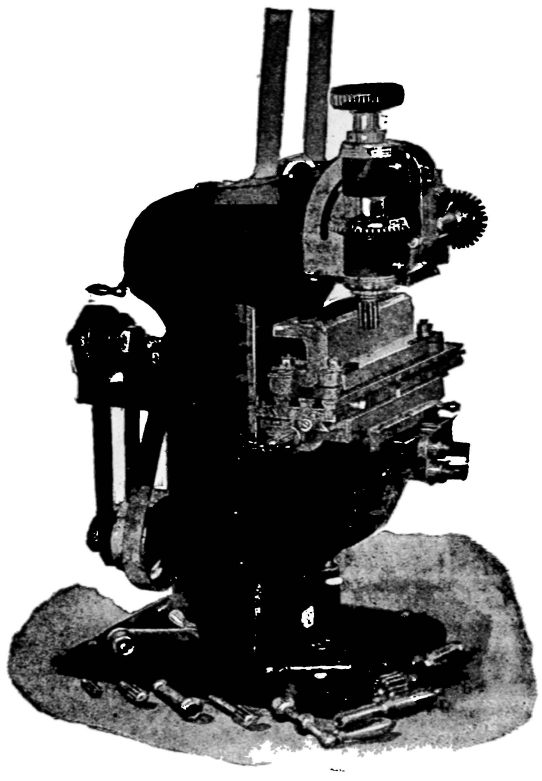

Fig. 4.

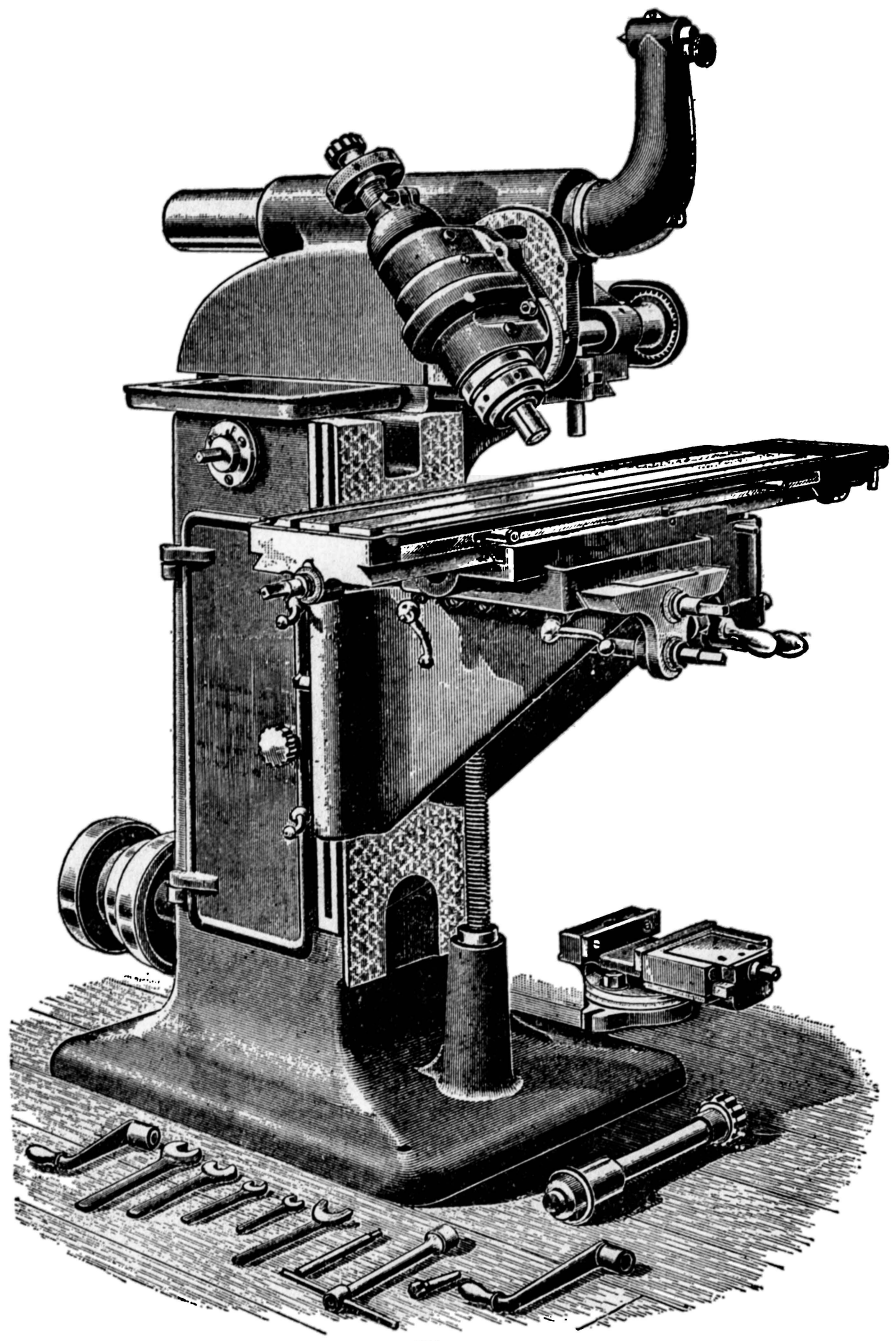

Fig. 7.

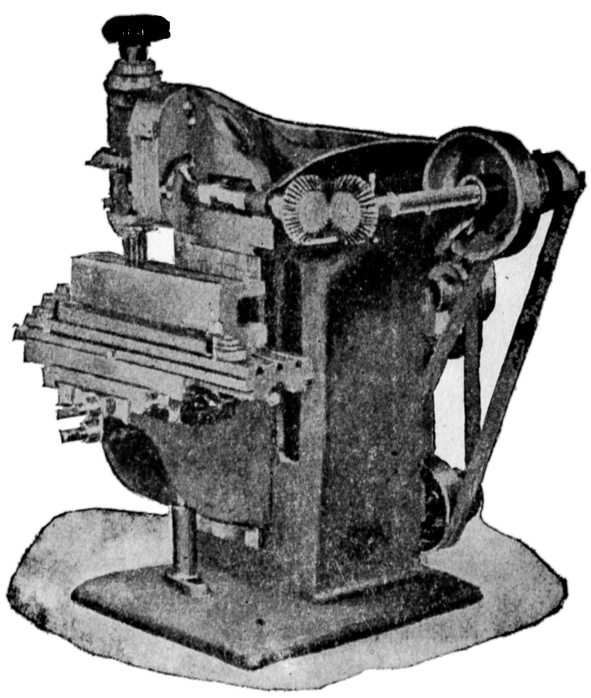

Fig. 5.

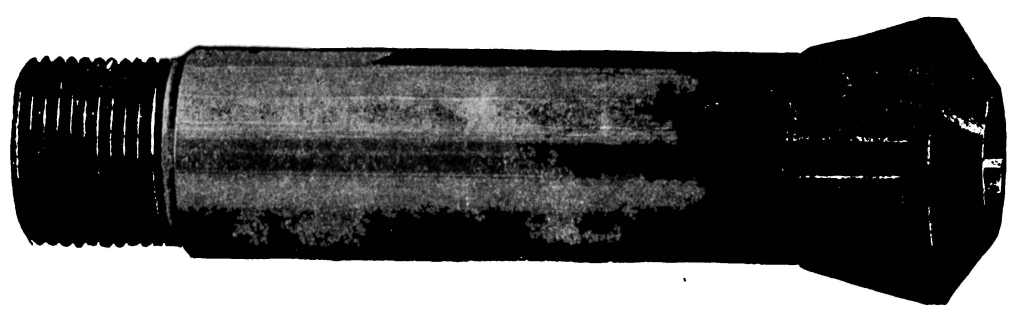

Fig. 6.

that slides in a knee clamped to the table of the machine. By reason of the location of the clamps and the solidity of the table, work is held as firmly between the centres of this attachment as it is between centres fastened directly to the table.

The footstock of the attachment slides in a T-slot $\frac{5}{8}$ inch wide, and can be placed to take in work to $4\frac{1}{4}$ inches in diameter and 17 inches in length.

Hand Milling Attachment.—The No. 0 plain milling machine with rack feed can be quickly changed by means of the attachment, Fig. 7, Plate II.-D., into a hand milling machine with or without an automatic longitudinal feed.

An apron, placed on the outside end of the knee, carries a lever attached to a segment of a gear which runs in a pinion placed over the end of the shaft that moves the table longitudinally, and this lever, when moved, turns the shaft as the crank would if it were in position. The attachment, with a knee having a working surface of 6 inches by $5\frac{3}{4}$ inches, is clamped on the table, and on this the fixtures for holding the work can be fastened as on a hand milling machine. When brought to position the lever can be held by the catch in the holder, shown at the left of the cut, which can be released by a latch on the back of the lever, so that at the same time that the knee is returned to position the catch is released without an extra movement. While the lever is held down, the feed can be thrown in and milling done as on a plain milling machine.

The top of the knee at its lowest position is 6 inches from the top of the table and can be raised 2 inches.

With this attachment in position the milling machine table has a transverse feed of $2\frac{1}{4}$ inches. The longitudinal feed of the table, by means of the lever and gear segment, is 4 inches, but with these removed the machine will feed 16 inches automatically.

Gear-cutting Attachment.—This attachment, Fig. 8, Plate II.-D., is for use in cutting gears on wheels larger and heavier than can be cut with the usual fixtures belonging to a milling machine. The centres swing, without raising blocks, 14 inches in diameter. The spindle has a No. 10 taper hole. The index plate is 20 inches in diameter, has 4,294 holes, and will divide all numbers to 75 and all even numbers to 150. An adjustable rest, placed on the headstock, is provided as a support to the gear while being cut. The attachment can be fitted for use on Brown & Sharpe's universal milling machines Nos. 1, 2, 3, and 4.

Single Dial Index Centres.—These index centres, Fig. 9, Plate II.-E., are convenient for use on milling or other machines where rapid indexing is to be done, as in cutting teeth in sprocket wheels or mills, or in milling nuts, etc., and swing, respectively, 8 inches and $6\frac{7}{8}$ inches in diameter. The spindles are threaded on the ends, and are provided with No. 11 taper holes. The footstocks are provided with a bearing instead of a centre, which gives the arbor a firm support. Footstocks can be furnished with adjustable centres when desired. The index plate is a dial provided with hardened steel bushings, and is covered, thus protecting the holes from dirt. The plate is locked by a hardened steel taper pin, which is forced into the bushing by a spring, and can be released by a lever and the work rotated by a hand wheel, thus making the indexing very rapid. While the plates can be used, usually, for other than the number of teeth for which they are made, it is desirable to have them contain holes for the number of teeth to be cut, as mistakes can thus be avoided.

Index Head and Centres with Centre Rest.—These centres, Fig. 10, Plate II.-E., swing $12\frac{1}{2}$ inches in diameter. The head can be set at any angle from 10 degrees below the horizontal to 10 degrees beyond the perpendicular. The spindle is provided with a face plate and adjustable dog carrier. The front end has a taper hole. The straight hole at end of taper is $1\frac{1}{2}$ inches in diameter. The worm-wheel is 6 inches in diameter, and one revolution is made by 60 revolutions of index crank. The index plates divide all numbers to 100, all even numbers to 134, and all numbers divisible by 4 to 200. The table is provided with flanges, is 32 inches long, 8 inches wide, and has three T-slots $\frac{5}{8}$ inch wide. Combined length of head and footstocks, 18 inches. Centre rest will take work to $3\frac{1}{8}$ inches in diameter.

Ten-inch Index Centres.—The centres, Fig. 11, Plate II.-E., swing $10\frac{1}{2}$ inches in diameter. The spindle is threaded on front end and has a taper hole. The straight hole at end of taper is $1\frac{1}{16}$ inches in diameter. The worm wheel is $6\frac{1}{2}$ inches in diameter, and one revolution is made by 40 revolutions of index crank. It has 24 holes, and when the worm is disengaged direct indexing can be done and the wheel held by means of an index pin. The index plates are the same that are used on the No. 1 universal milling machine. The headstock can be clamped at any angle on table. The tongue and bolts furnished fit a T-slot $\frac{5}{8}$ inch wide. The tongues are inserted. Combined length of head and footstocks, $13\frac{3}{4}$ inches.

Work-holding Vices.—In the plain vice, Fig. 12, Plate II.-E., the jaws are of steel and left soft unless otherwise specified. The flanged vice, Fig. 13, Plate II.-E., is provided with flanges for clamping them to the table of milling or planing machines. In this vice the jaws are also left soft unless otherwise specified.

Toolmakers' Universal Vice.—This vice, Fig. 14, Plate II.-E., was designed to meet the requirements of toolmakers, and machine shops where a great variety of work is encountered. It will be found of advantage in producing irregular or angular pieces and forms, as dies for sheet metal, stamping and bending forms, drop forgings, etc.; also in determining and forming the angles for model parts of bicycles and work of a similar class. Often the vice will take the place of an expensive "jig" or fixture. It can be set at any angle and the work placed in position or removed without disturbing the setting of the vice. It can also be easily moved from one machine to another and several operations performed without removing the piece. The base is double. The lower part is provided with a tongue, and is fastened to the table by two bolts, which fit into the table T-slots. It has two sets of holes to allow for moving the vice back when set in a vertical plane. The upper part is a hinged knee, which swivels on the lower part of the base. The lower part of the knee is graduated and can be set at any angle in a horizontal plane. The upper part of the knee is hinged to the lower part in such a manner that it can be set at any angle to 90 degrees, in a vertical plane, and clamped rigidly in position by the nut on end of bolt forming the hinge, and the bracing levers shown at left of cut. The upper surface is graduated for setting the vice proper. The bolt forming the hinge is provided with a hardened steel dial graduated to 90 degrees. The bracing levers are held in position by the bolt shown in centre, and the bolts at the ends of the levers. The vice proper swivels on the upper part of the hinged knee, and can be set at any angle to the axis of the bolt forming the hinge.

Plates II.-F, G and H present examples of the Browne & Sharpe milling machines doing various kinds of work.

THE VAN NORMAN DUPLEX MILLING MACHINE.—In Figs. 1 to 6, Plates II.-I. and II.-J., is shown the Van Norman duplex No. 0 milling machine. The distinctive features of the machine are that the cutter head, with its spindle, is constructed so that it may be set to work in any position between that of the vertical and horizontal, and is as rigidly carried as though the machine had merely a fixed vertical or a horizontal spindle.

Work may be clamped on the table or held in a vice, and the cutter or cutters may be brought to bear in any position between vertical and horizontal—without releasing the clamps on the work.

Bevel cuts can be taken with right-angle cutters. Holes may be drilled in absolute alignment in vertical, horizontal, or angular positions, etc.

The main head frame, to which the swivel cutter head is attached, has a movement in and out over the column of 7 inches.

The swivel cutter head is attached to a vertical wall on the main head, in a plane at right angles to the longitudinal movement of the work-holding table, and all angle cuts can therefore be made the full length of the movement of the table.

Positive stops determine the vertical and horizontal positions of the swivel head, and the head has a finely graduated index for setting at angles.

The No. 2 machine, Fig. 7, Plate II.-J., has all the movements of the No. 0, and in addition has an overhanging arm to support the cutter arbor, an interior sliding spindle which gives feed in line with the cutter spindle at any angle, and a profiling device which converts the machine into a profiling machine.

A four-spindle heavy milling machine, designed and constructed

by Beaman & Smith, of Providence, Rhode Island, is illustrated in Fig. 1, Plate II.–K.

This machine is intended for face milling two surfaces of two pieces at one time, using one vertical and one horizontal spindle on each piece. The centres of the vertical spindles are placed 4 inches ahead of the horizontal spindles, which allows the cutters to cut across the corner of work and yet clear each other. The end adjustment of horizontal spindles is from 19½ inches to 25½ inches from end to end, or 3 inches for each. The vertical adjustment of horizontal spindle heads is from top of platen up to cross head. The vertical spindles have 3 inches independent vertical adjustment, and the cross head can be adjusted so that the end of each spindle will reach platen or 18 inches above it. The end movement of all the spindle quills is by means of worm, worm wheel, and pinion and rack, with provisions for fastening at any point.

All spindles are driven through positive gearing from cone shaft. Automatic feed is taken from back end of cone shaft through change gears, allowing positive feed of platen from 1 inch to 12 inches per minute, through worm and worm wheel to revolving nut on the stationary platen feed screw. The nut is provided with anti-friction collars made of hardened balls running on hardened and ground collars. A trip dog detaches the worm from the wheel for automatic stop.

A vertical two-spindle open-side milling machine is illustrated in Fig. 2, Plate II.–K.

This machine consists of a box bed 9 feet long, with an extension on back supporting the upright, which carries the overhanging arm, to which is fitted the two saddles carrying the spindles.

The spindles, as illustrated, are made with 1½-inch diameter conical bearing at the lower end, and 1⅛-inch straight bearing at the upper end, each provided with bronze bushings. The spindle ends extend 2 inches below the spindle head. The cross adjustment of the spindle centres is from 2½ inches to 14 inches. Each spindle is provided with ½ inch independent vertical adjustment.

The vertical adjustment of the crosshead on the upright is by means of a screw, and is provided with a dial to read to thousandths of an inch. The spindles can be raised from the platen to 17½ inches above.

The belt which drives the spindles also drives the feed mechanism, and is so arranged that the tension of the driving belt is not altered by the vertical movement of the crosshead or upright.

An open-side vertical single-spindle milling machine for heavy surface milling, using face or end cutters, is shown in Fig. 3, Plate II.–K.

The table is gibbed upon flat ways, and the cutter spindle mounted in a head sliding upon an open-ended cross slide or rail carried on a vertical slide adjustable for height along the work table and with self-acting feed motion.

A duplex milling machine for heavy work, designed and constructed by Beaman & Smith, of Providence, Rhode Island, is shown in Fig. 4, Plate II.–K.

The cutter spindles are powerfully geared for heavy cuts and are carried in heads adjustable for height from the work table, which has a hand and an automatic feed motion.

A special milling machine, with two horizontal and one vertical cutter spindles, is shown in Fig. 5, Plate II.–K.

The horizontal spindles, being intended for surfacing in a vertical plane, are fixed for height above the work table.

A vertical milling machine by the Hilles & Jones Co., of Wilmington, Delaware, is shown in the figure in Plate II.–L. It is very largely used by locomotive builders for dressing up connecting rods, guide bars, straps, yokes, etc., and besides this, is very suitable for general engineering work. It is fitted with circular, longitudinal, and transverse motions, and has special feeds for drilling and boring. The main frame is of a box section and cast in one with the transverse slide bed; the distance from the centre of the spindle to the bed is 20 inches, and the nose of the spindle is so arranged that it can be brought down flush with the table, and has an upward movement of 18 inches.

The forged steel spindle, 4 inches in diameter, is carried in straight brass bearings 10 inches long; the bottom bearing is contained in the vertical slide, the top one being bolted up to the main frame. A feather on the spindle works through the large bevel driving wheel, the hub of which works in the top bearing. The upward wear is taken up by a heavy brass collar and setting up screws. The spindle is driven by a three-speed cone pulley, and single and double gearing, and together with the slide is counterbalanced by a weight suspended from wire ropes, and working up and down on the inside of main frame. The top support for rope pulleys is made use of for supporting a swing jib crane, which is found very useful for holding up the ends of long rods.

The circular table is 42 inches in diameter, turned all over, and has machined T-slots for bolting up the work; the annular trough is kept low down, so that the bolts can easily be got in. The transverse slides are 48 inches long. All motions are self-acting and easily manipulated, the self-feed being arranged with a multiple jaw clutch and lever for throwing it in or out, and not the usual screw. The machine is of good design, very rigid, and well adapted for this class of milling work.

Plate II.–M represents an exeeptionally powerful vertical-spindle milling machine. The work is carried upon a horizontal table having a circular feed motion mounted upon cross slides having motions at right angles one to the other; and as all these feed motions may be operated independently or simultaneously, there is no limit to the shape of the work which may be operated upon by the machine.

Plate III. represents Kempsmith's new Universal Milling Machine.

The general design of the machine conforms to the usual practice, but in the details some departures have been made which are interesting from a mechanical standpoint. The cone pulley has its smallest end nearest the main bearing, in order to allow of the frame of the machine being brought up close to the bearing, to give it the greatest possible strength there, and the overhanging arm is fitted to a socket, which is bored in an arch extending from one upright to the other, and cast solid with the frame, two clamp bolts securing the arm firmly in place, and at the same time permitting it to be readily removed when desired, and a stiff and solid machine is had, whether using the arm or not. Six changes of feed are provided for with each different speed of the spindle, the slowest speed of the latter being suitable for a cutter ½ inch in diameter, back gears, proportioned 4 to 1, being used for the larger sizes.

The index or spiral head is so arranged that its spindle may be elevated, or depressed below the line of centres, has a full line of index plates, and is geared to cut spirals from one turn in 1⅓ inch to one turn in 133⅓ inches, the gearing being arranged either simple or compound, as may be required, the simple gearing being sufficient for all the ordinarily used spirals, this gearing being arranged the same as the change gears on a lathe, and put in place with equal facility. The foot stock is fitted with what is called the side centre, this being so arranged that it offers the greatest possible facility for getting at the work with cutters, either at the top or at the side.

The three squared handle stems seen in front of the knee are for the usual vertical and horizontal movements, there being two rates of vertical movement of the knee provided for, one slow and the other rapid, the latter for use when the knee is to be moved a considerable distance. The table can be swung clear around, and clamped at any desired angle, and has automatic feed at any angle, or in either direction, the feed being automatically tripped at any desired point in either direction. The table is fed by a splined screw, which derives its motion from bevel gears, the table swinging upon a central trunnion A, Fig. 3, Plate IV., and being clamped at any angle by the split ring B, which is made of steel. The trunnion is firmly screwed and dowelled into the swivel block C, and is bored to receive the hollow vertical shaft D, through which shaft passes the feed trip rod E. The feed is tripped by dropping worm out of gear, and trips as easily when under the heaviest cuts as when running light. An end view of the worm, worm-wheel, and case, partly in section, is shown at Fig. 1. The direction of

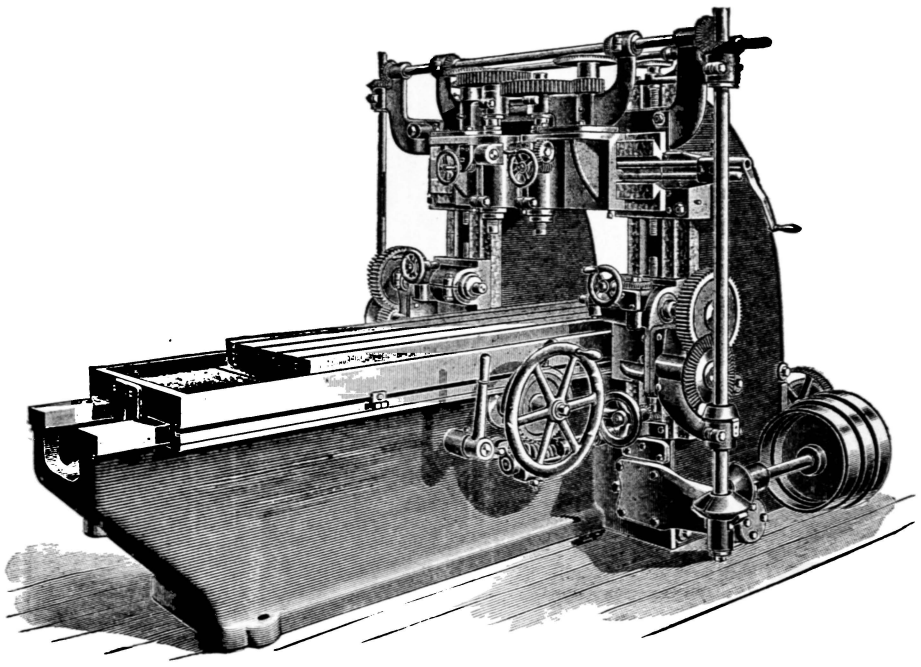

Fig. 1.

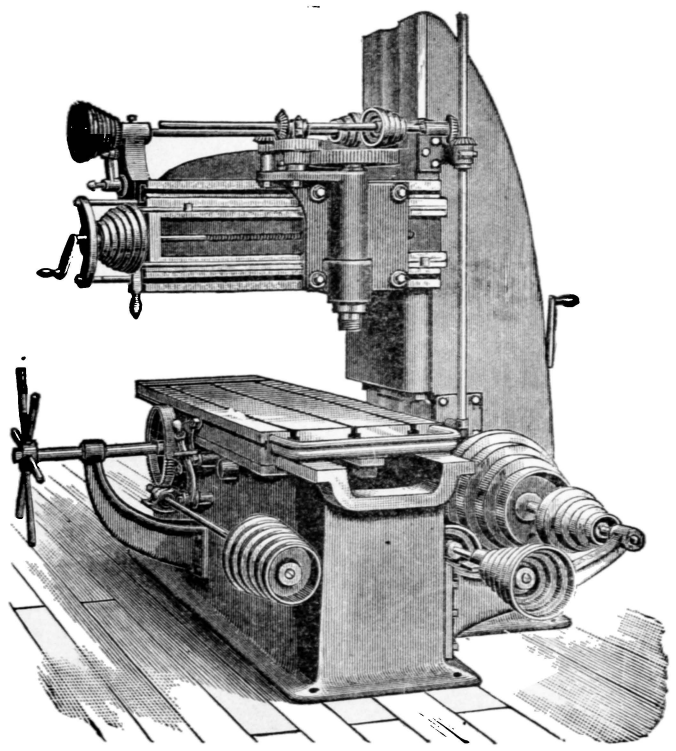

Fig. 3.

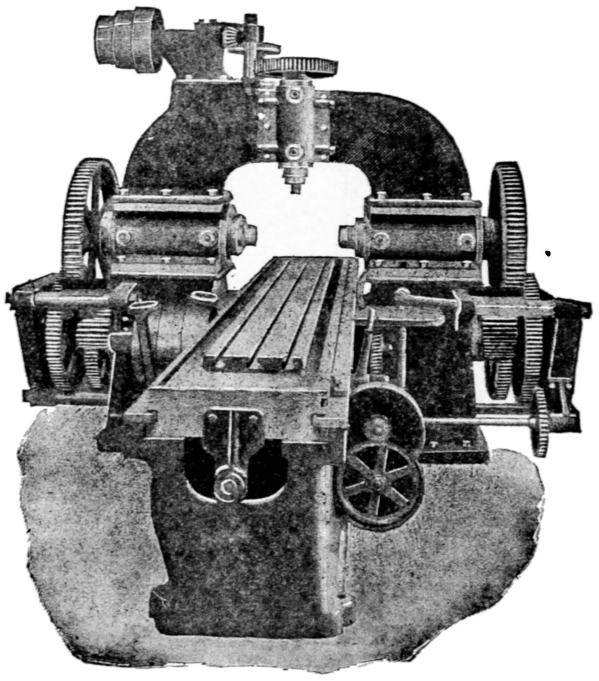

Fig. 5.

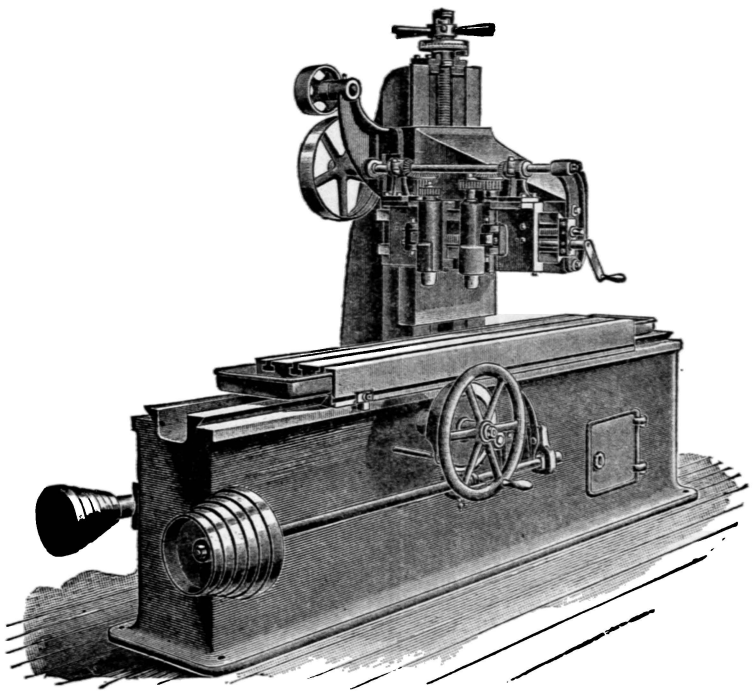

Fig. 2.

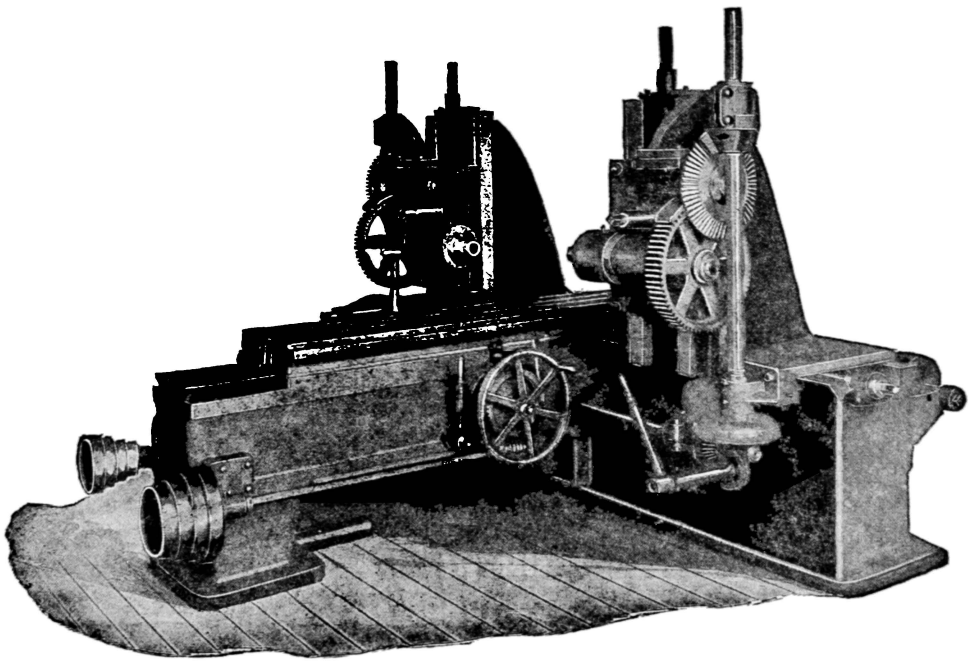

Fig. 4.

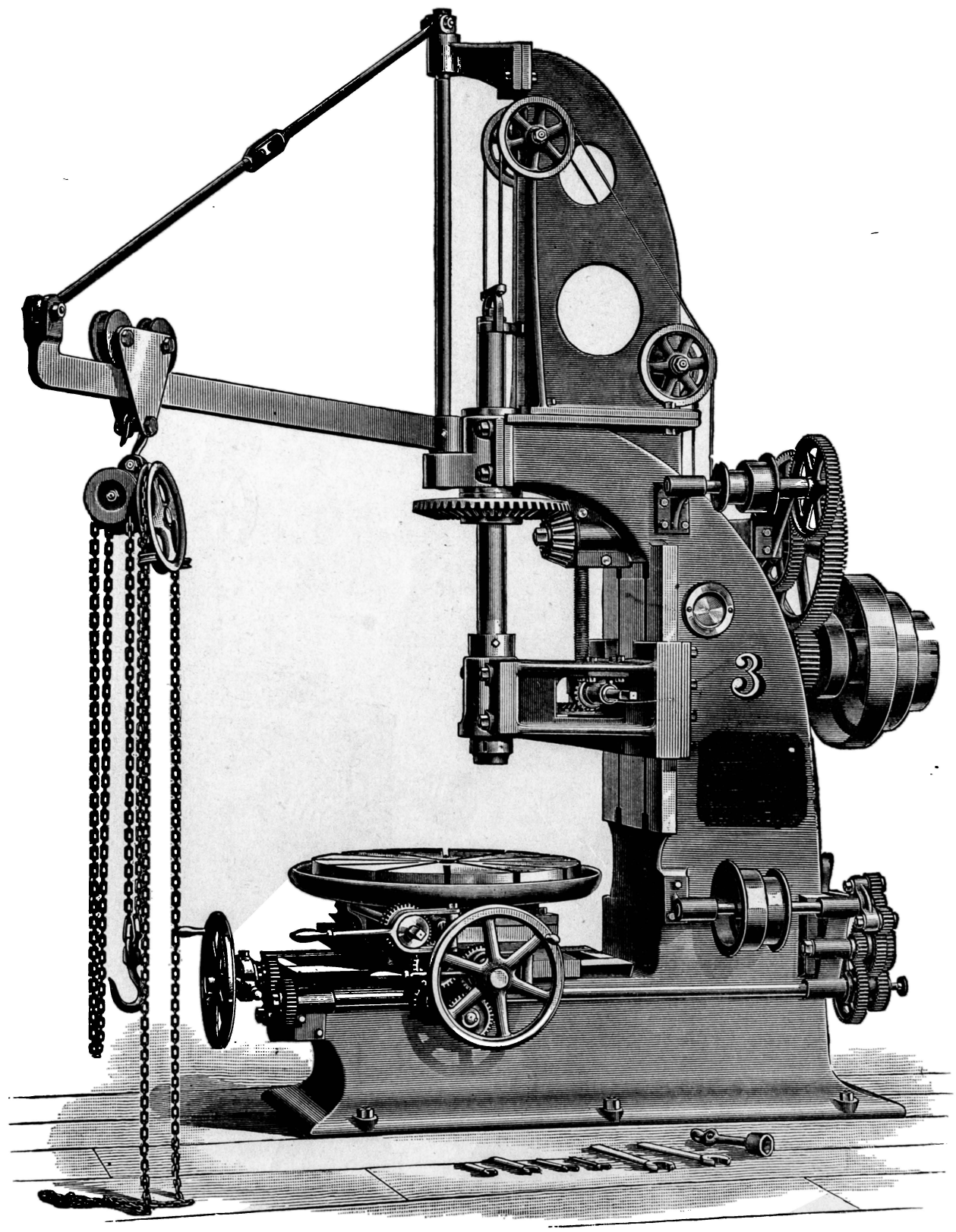
3

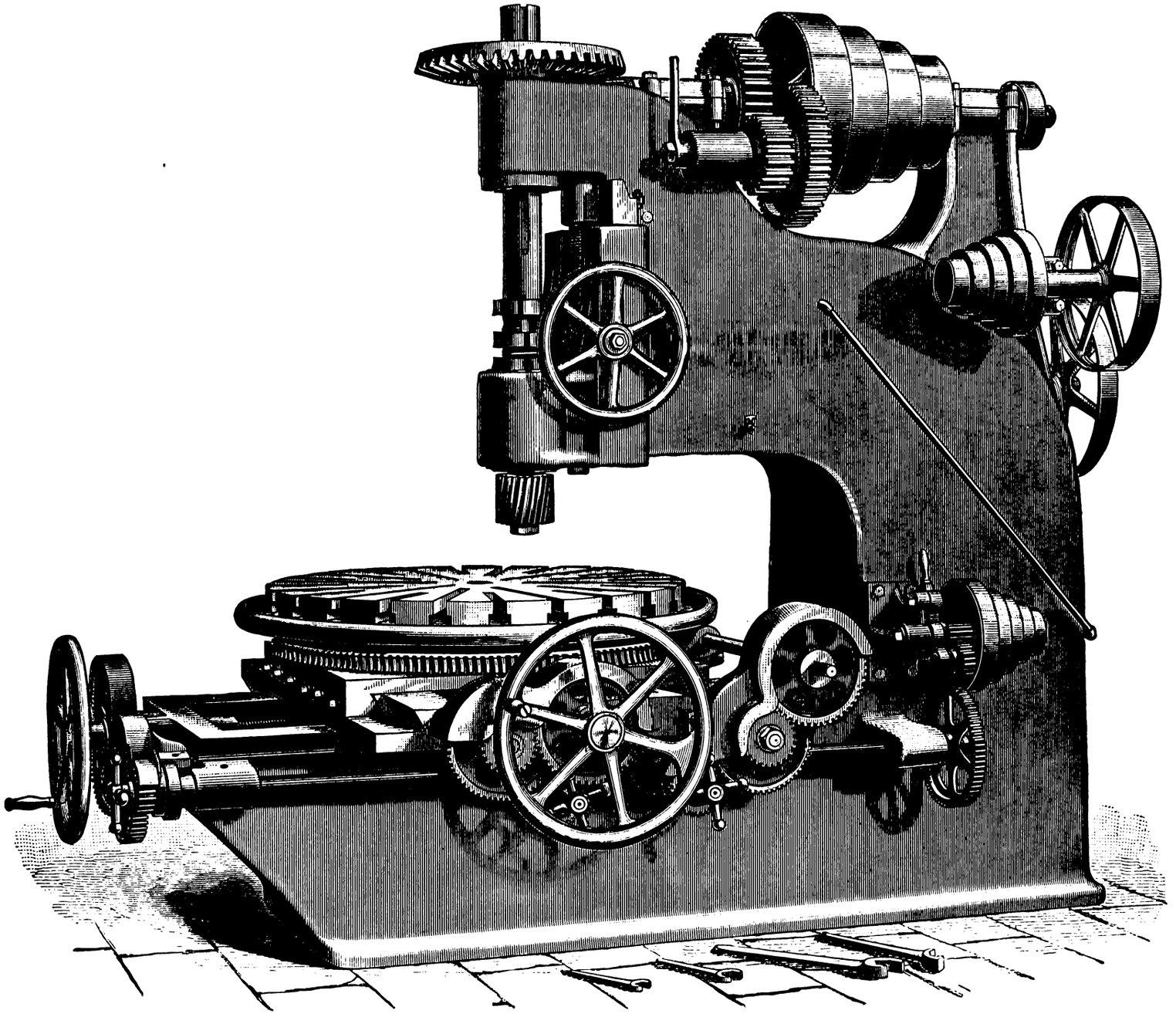

VOL. II—4

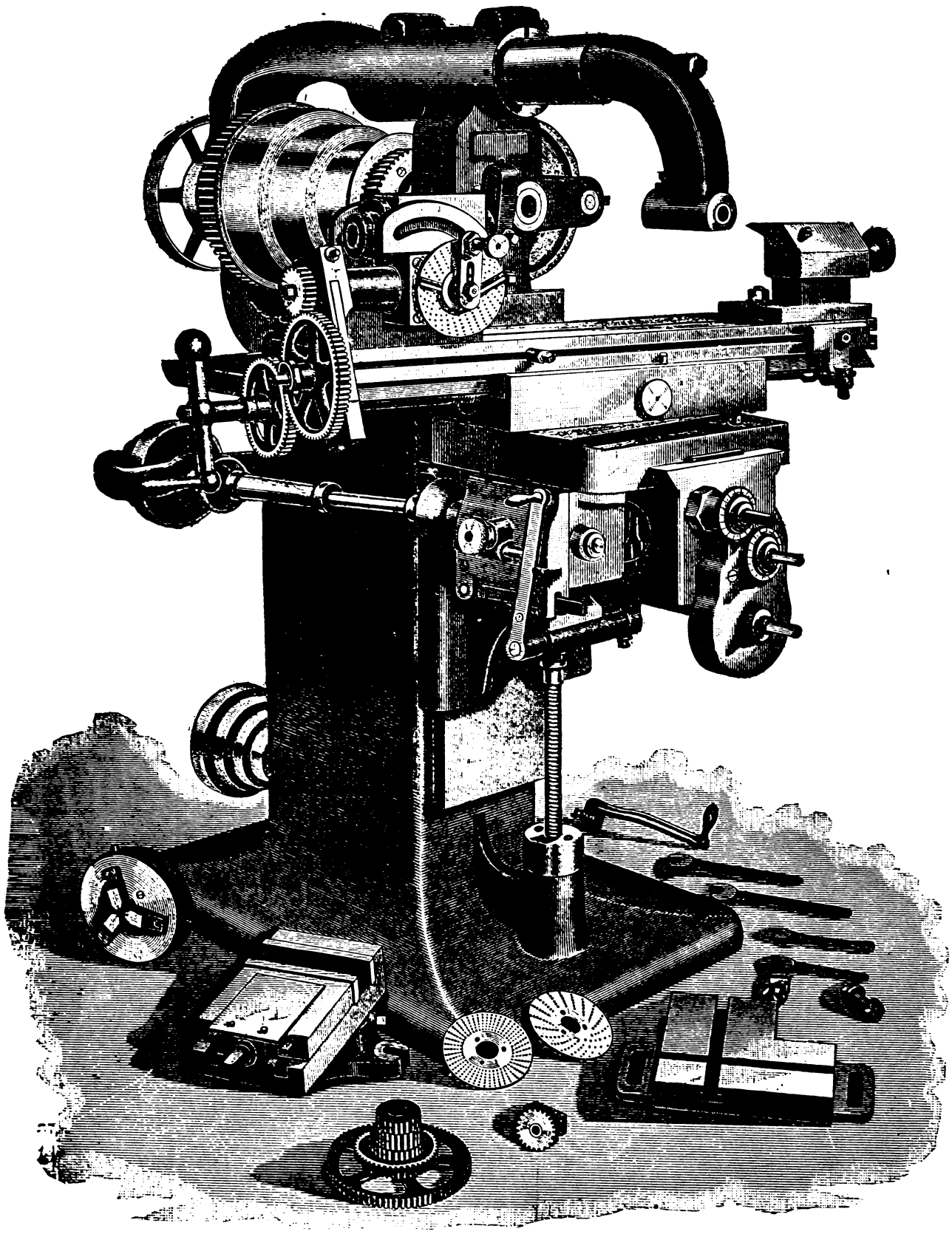

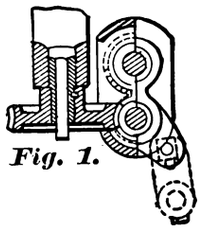

Fig. 1.

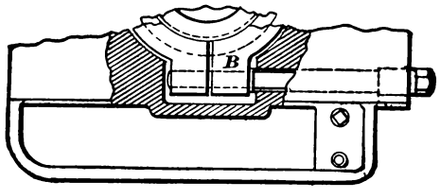

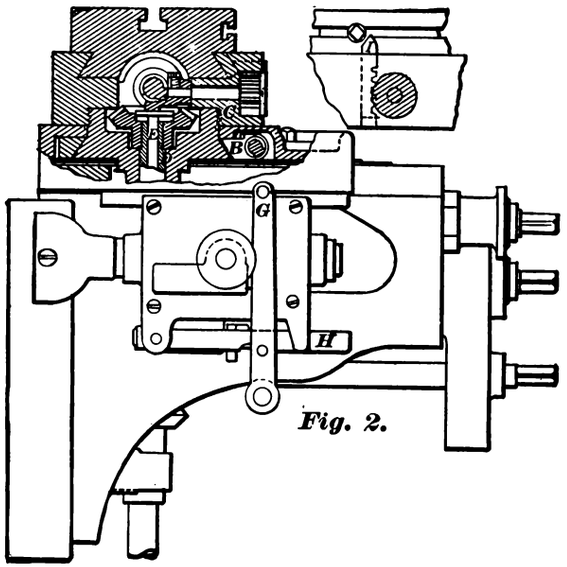

Fig. 2.

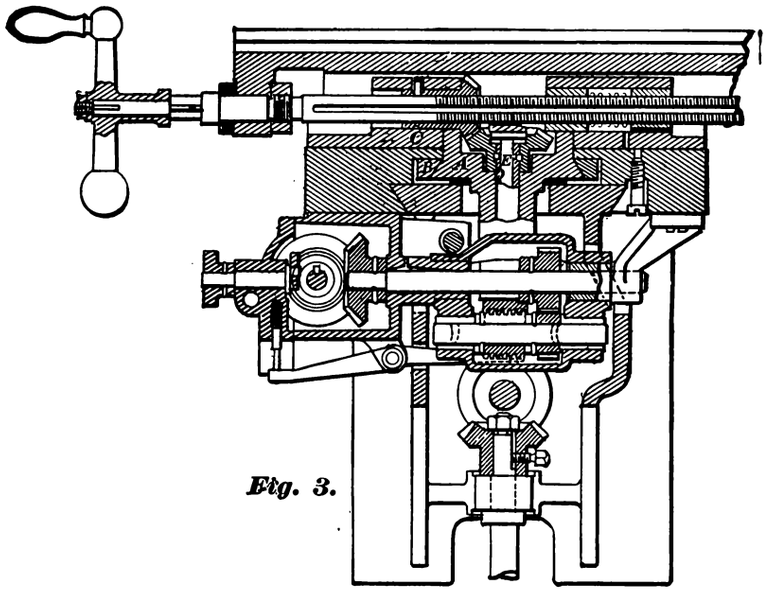

Fig. 3.

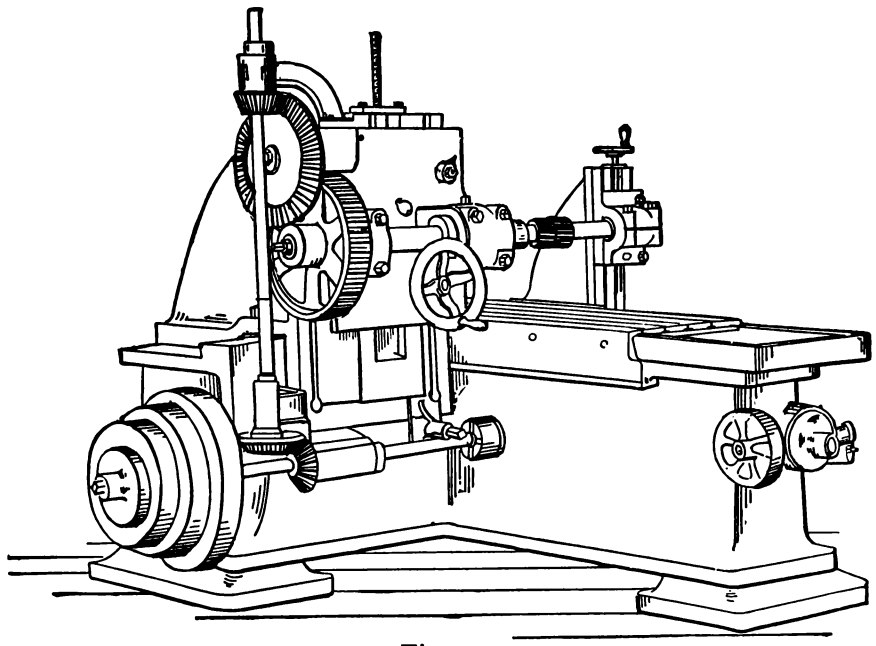

Fig. 1.

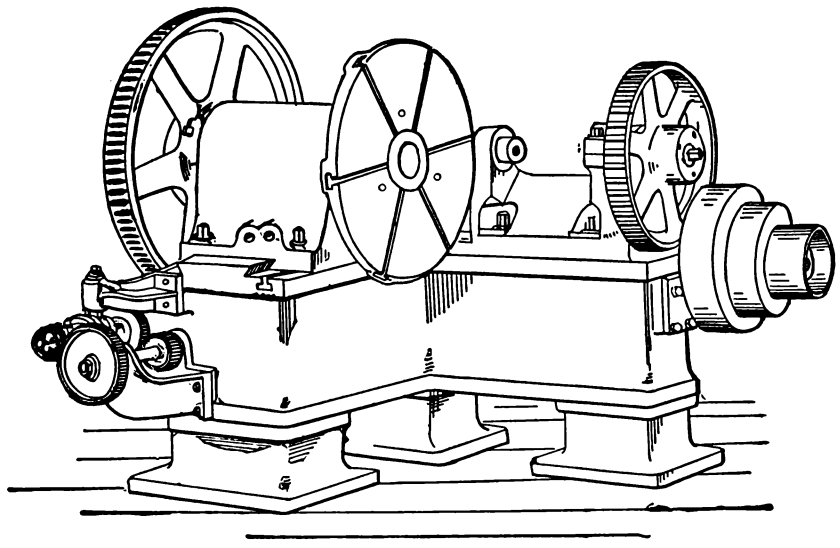

Fig. 2.

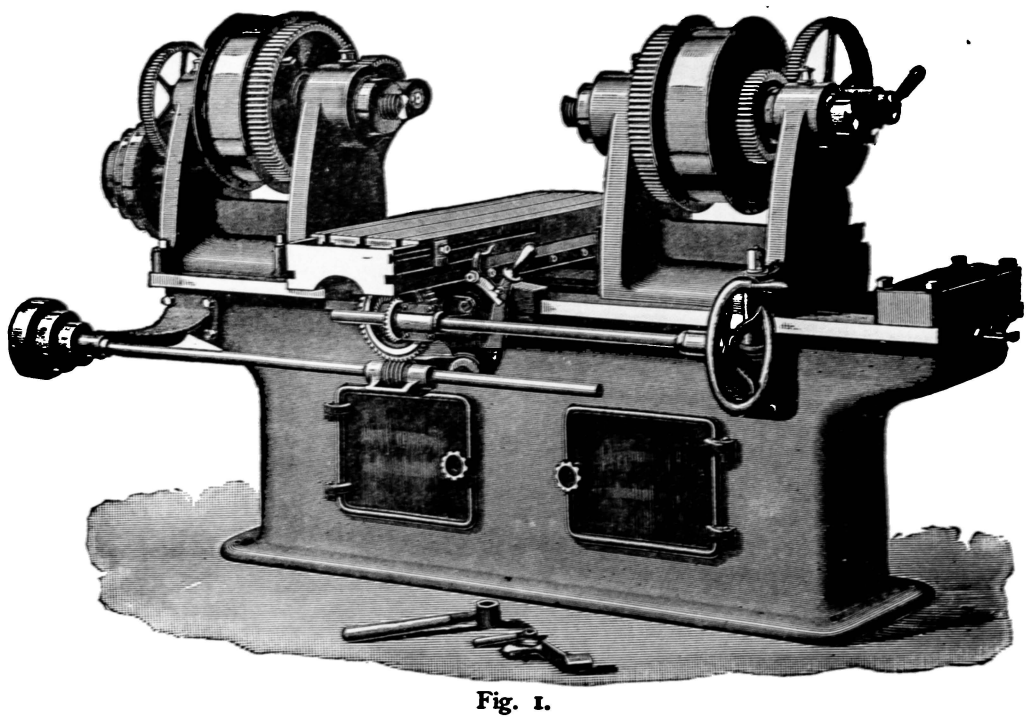

Fig. 1.

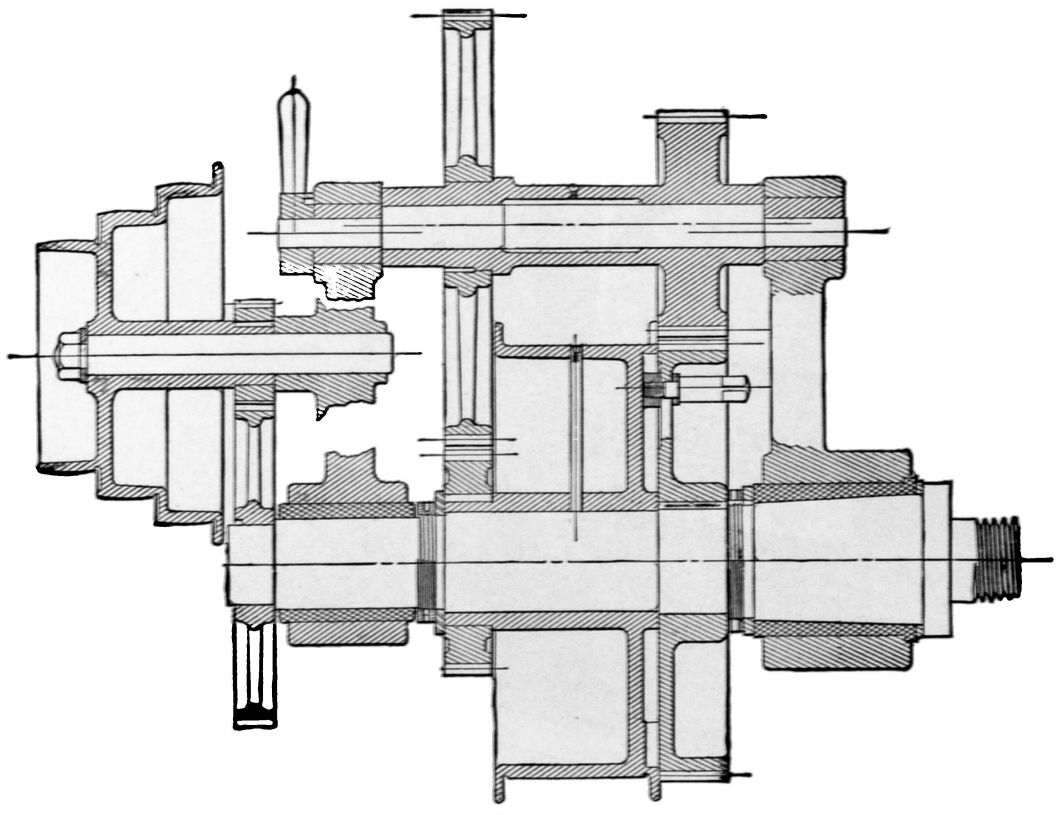

Fig. 2.

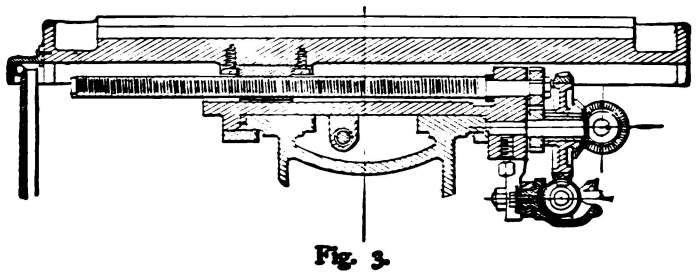

Fig. 3.

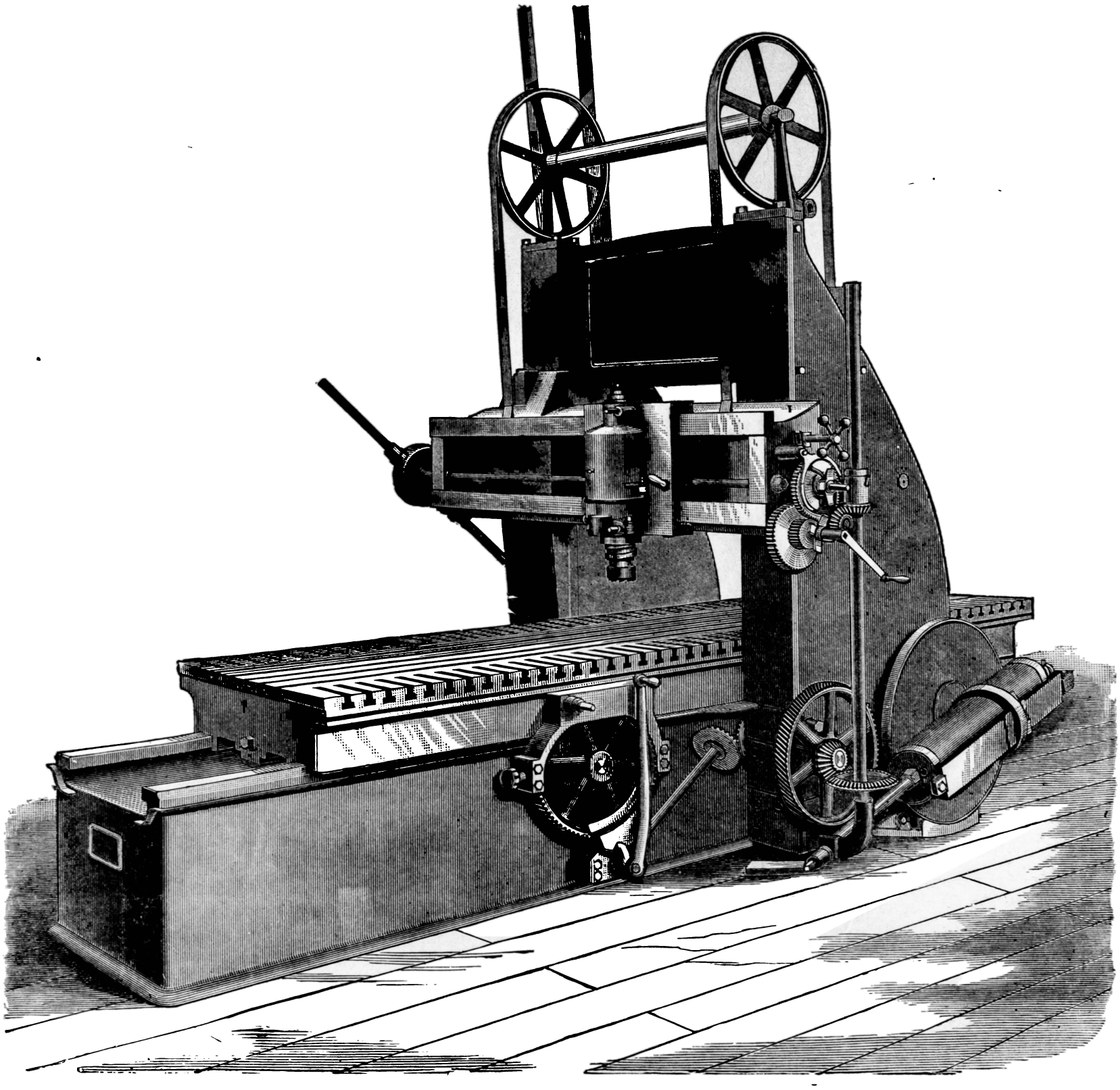

the feed is reversed by turning a knob to the right or left, this knob being shown at the left of the lever G, Fig. 2, and in section in Fig. 3. The reversal is accomplished by means of a double ended clutch, which engages with bevel gears running in opposite directions. The feed worm is of hardened steel, runs in oil, and its shaft in phosphor bronze bushings. The feed is thrown in by lever G, and out by latch H, when operated by hand, and by a trip pin, when used automatically. The feed gearing is completely enclosed, to protect it from dust or chips, and the opening in the top of the knee is at all times covered by sliding plates of steel.

With the head and foot stocks removed, the top of the table is entirely unobstructed, so that work of any length may be fastened to it.

The spindle, which is of steel, is hollow, and the end threaded; arbors or chucks which fit this spindle fitting also the spindle of the index head. The movements of the table by the screws are indicated in thousandths of an inch by micrometer graduations, the index marks on the movable collar being the same as those on the graduated circle, so that they match exactly, and there is no projection nor obstruction of the graduations.

Fig. 1, Plate V., represents a milling machine by the Pratt and Whitney Company, the construction being clearly shown in the cut, in which it will be seen that the frame is of the box form and very rigid, and an outer bearing is provided for the end of the cutter spindle. Both heads are adjustable for height from the work table and may be rigidly bolted in their adjusted positions.

Fig. 2 represents another machine by the Pratt and Whitney Company of new design.

The work is bolted on to the face plate shown in the cut, or an outboard bearing corresponding to the tailstock of a lathe may be provided and the work supported at that end also. The cutters are driven from the head, having the cone pulley with three changes of speed.

The rate of revolution of the work is that necessary for the feed.

As an example of the great usefulness of this machine, suppose a blank for a gear wheel to be chucked on the face plate, and then a set of milling cutters may be employed to face up the blank and dress both the edges at the same time.

This machine really supplants the lathe for a large class of work, requiring less attention and being more accurate.

Fig. 1, Plate VI., represents a duplex milling machine by Beaman & Smith, and Fig. 2, a section of the driving mechanism. The driving pulley is 16 inches diameter for 5-inch belt, and can be run direct to spindle or back geared in the ratio of 4 to 1.

The feed pulley shown in same figure is located directly under the spindle, and is geared up 3 to 1 to get the desired belt speed. The greatest distance from end to end of spindles is 2 feet 6 inches; least distance, 5 inches.

Fig. 3 is a longitudinal section of table, and cross-section of carriage, and also shows the feed mechanism of the table. The carriage is moved on the bed by a screw to the desired position, and then fastened. The table has no vertical adjustment, the article to be operated on being held in a suitable fixture. The top of the table has three T-slots, is 40 inches long, 12 inches wide, and has an automatic screw feed of 24 inches; the length and feed can be increased if desired.

The feed shaft shown on front of perspective view of the machine carries a worm (A, Fig. 2) which is of steel, and runs in a bronze worm wheel, from which motion is carried through two spur gears to the 3-pitch screw which has a bronze nut fastened to the under side of the table.

The feed is stopped automatically by a stop on the side of the table tripping the starting lever and dropping the worm out of the wheel; the quick return is by means of the upper shaft with hand-wheel shown in perspective view and connected to the screw through mitre gears; the shield shown beyond the end of the screw is to prevent chips and dirt from getting into thread of screw while it is beyond the end of table. The distance from centre of spindles to top of table is 10 inches. There are two countershafts, each having a three-section cone, giving six properly arranged speeds to the spindles. The first shaft has tight and loose pulleys 16 inches diameter for a 5-inch belt, and should run about 120 turns a minute.

Plate VII. represents what is termed a traversing machine, designed by Professor John E. Sweet and now made by thePratt and Whitney Co.

The machine very much resembles a planing machine, but differs as regards the vertical spindle; in the fact that the platen or table is fed back and forth at adjustable speeds, by power, or rapidly by hand, and in the fact that the cross-head is fed up and down by power or rapidly by hand.

As regards details of construction, the machine differs from the ordinary planing machine in every particular. The bed is a complete box, having solid top and bottom, as well as sides, which has been proven by experiment to be 50 per cent. stiffer in a vertical direction, twenty times stiffer sideways, and thirteen times more rigid against torsional strains than the ordinary side plate and cross-girt system.

The table, 3 feet by 12 feet, is also of the hollow box construction—8 inches deep—full width between the housings, and carried on flat ways 3½ inches wide. The housings are hollow boxes, as is the counter-weighted cross-head, the balance weights running in the housings. To resist the side strain of the cutting action, which is more severe than in a planing machine, the cross-beam between the housings or posts at the top is very wide, and the cross-head itself has a T-slide cast with it, which serves as a vertical guide, and this, in connection with the vertical power feed, makes the machine an efficient boring machine, and a handy substitute for a radial drilling machine, having a capacity for this work of drilling a $\frac{3}{16}$ inch hole up to boring one from 12 inches to 16 inches diameter, and anywhere in a structure 3 feet wide, 12 feet long, and any depth that can be placed under the boring tool or drill.

A fair idea can be formed of the arrangement of the mechanism from the cut. On the rear of the machine a belt from a cone overhead drives a cone shaft at the base of the machine. This shaft extends through and carries a leather-faced disc, shown in the engraving. Bevel gearing and a telescopic shaft convey motion to a spline shaft seen in the cross-head, and this, through the agency of either worm or spur gearing, gives motion to the vertical spindle at eight different speeds, varying from one to twenty-six, or from 5 to 130 per minute.

The leather-faced disc before mentioned (as seen at the lower right-hand side of the cut) gives motion to all the various feeds, through the agency of a novel device. The iron drum running across the face of the disc is set about ⅛ inch away from it, and an endless leather belt, surrounding the drum loosely, is pinched between the drum and the disc, so that as the disc rotates the friction between the three—that is, the disc, belt, and the drum—causes the latter to rotate also; and by shifting this belt (which is done by the enclosing box shown) nearer to or further from the centre of the disc, the drum is caused to revolve slow or fast, as required, or by shifting the belt to the opposite side of the disc, the drum is rotated at varying speeds in the opposite direction.

In addition to the usual appliances to machines of this character, this machine is supplied with graduated scales, not shown in cut, for moving the work or cutter any given distance; this applies to the table, cross-feed, or vertical adjustment of cutter. Each slide is provided with a locking device, so that when the bed or slides are brought to the required point they can be permanently locked in position.

A taper socket in the spindle, with bushes or collets and mandrels, adapts the machine to the use of all drills, reamers, and milling cutters, and a quick pitch thread on the outside of spindle fits it for the use of large traversing cutters and boring tools.

Among the classes of work this machine is specially suited for is that of facing steam chests and valve faces, and at the same setting dressing out the ports and drilling the stud-bolt holes. With the three-centre system for holding work, such jobs as facing both sides and boring both holes in connecting rods is done accurately and quickly. While all kinds, or nearly all kinds of planing, milling, boring, and drilling are done, there is no change required in the machine—neither attachments nor fixtures, but simply a change of tools.

From the fact that either of the four above-mentioned operations can be performed with equal facility, and from the fact that it more nearly resembles a profiling machine than any other, and yet does not possess the profiling element, a new name has been adopted, and for want of a better one it is called a traversing machine.

Fig. 1, Plate VIII., represents an open-side milling machine by Beaman & Smith, and designed for surface milling. The feed may be operated by hand or by power, and has four changes calculated to give the proper cutting speeds to milling cutters from 4 inches to 12 inches in diameter.

MILLING MACHINE WITH VERTICAL SPINDLE.—This class of machine is finding favor for many kinds of work, because, among other reasons, the work can be more readily seen and inspected, and the eye can therefore more readily follow the contour of the cutter in passing along or over the work.

A vertical spindle milling machine, designed and constructed by Brown & Sharpe, is illustrated in Fig. 2, Plate VIII. This machine, for many kinds of work, is preferable to a machine with horizontal spindles. The operator can more easily see the work and more readily follow any irregularity in the outline of the surface to be milled. The spindle is hollow and runs in bronze boxes. The lower end of the spindle is threaded to receive face mills, fixtures, etc.

The cone has three steps for 3-inch belt, and can be set parallel with, or at right angles to, the bed. The vertical adjustment of 13¼ inches is obtained by raising or lowering the column. A hand wheel at the back of the machine is provided for this purpose. The feeds of the table are positive and automatic in either direction, and both can be automatically released at any point. There are sixteen changes of feed, obtained by means of change gears, varying with back-gears in position from .006 inch to 60 inches, without back gears in position from .001 inch to .01 inch, to one revolution of wheel on the side of the head.

Figs. from 1893 to 1899 represent a universal milling machine. This machine is so constructed that all the features essential to a universal milling machine are obtained by means of attachments (each complete in itself) which may be removed, leaving the work table clear, and serviceable for large work, or work which may be more conveniently held without the use of attachments.

Thus for the cutting of spirals, a fixture capable of originating any spiral right or left hand, from 2 inches to 6 feet pitch, is provided. Two bolts secure it to the machine table, and when the job is finished it is removed. Similarly for the cutting of cams, an attachment fastened to the work table by three bolts is used, which cuts either cylinder or face cams of considerable size, and as conveniently as a machine built solely for cam cutting. A gear-cutting device is also applied in the same manner, as well as plain or universal work-holding centres.

The essential features of the machine are a standard A, Fig. 1894, with spreading base, carrying upon its top a driving cone B, which is fully back-geared like an engine lathe. The driving cone operates also the feed mechanism. Above the driving cone is an arch C, in which is inserted an arm D for supporting the outer end of the mill arbor when used for heavy work. Upon the face or front of the standard slides a knee E, which in its turn supports a carriage F, which traverses crosswise upon it and carries above it the work table, which is provided with an automatic feed at right angles with the movement of the carriage. These three movements, vertical, cross, and longitudinal, cover all that is usually required in a universal milling machine.

Coming to details we start with the spindle or arbor, the front end of which runs in bearings of bronze. These are made in two parts, tapering upon the outside and straight upon the inside, a corresponding taper hole to receive the spindle bearings being bored in the solid iron of the standard. A check nut upon each end of the bushing or bearing abuts against the end faces of the standard bearing, and by drawing the bushing or bearing through the taper hole in the standard, produces the exact required closeness of fit between the spindle journal and its bearing bore, and thus compensates for the wear of either the spindle journal or its bearing or bushing bore, the front check nut also providing a dust cap.

The back journal of the spindle runs in a bushing of considerable length. Upon the back end of the spindle is secured a train of feed gears G, the lower of which is upon a shaft that on its other end carries the first feed cone H. The corresponding feed cone I is fixed to the longer shaft J, carrying a worm (or tangent screw) K, which engages with the worm gear L connected directly with the feed screw, for the longitudinal motion of the work table.

This whole feed work is shown fully in outline in Fig. 1894. The arm M that supports the two lower feed gears pivots upon the outboard end of the back bushing, hence its centre coincides with that of the spindle. At its lower end a projection inwards forms a hub upon which a second lug or arm N is pivoted. The lower end of this arm is bored out to receive the threaded end of a lug O with the bearing of the second feed cone I. This threaded end carries a milled or hand nut P, so that to tighten or loosen the feed belt a turn of the nut is sufficient, the effect being to increase or diminish the distance between the feed cones H and I. The front end of the feed rod is supported in a drop box Q, and is splined to allow the worm K to travel upon it. It will be seen, therefore, that the feed mechanism is undisturbed either by the vertical movement of the knee, or the cross motion of the carriage, or the longitudinal feed of the table. The feed gears are covered with a shield R, a part of which is shown broken away. The knee with its appendages is actuated vertically by means of a crank connected with bevel gearing at S, which moves a perpendicular screw T under the centre of the knee. Rotating with this crank shaft is a finger U held by friction. This finger is in close proximity to a dial V graduated to thousandths of an inch, and as one revolution of the finger indicates ⅛ of an inch of elevation to the knee E, the ordinary subdivisions of an inch are obtained either with or without an inner circle of graduations on the dial. A similar dial upon the cross-feed motion (not shown in the engraving) is also put on, which likewise reads to thousandths of an inch.

The feed of the work table is accomplished by means of a screw whose thread is in shape a half V and does not bear upon the bottom of the thread in the feed nut, which is in halves, with provision for closing up to compensate for wear, while check nuts on one end of the feed screw take up all end play.

The automatic feed is self-stopping (so as to enable one attendant to operate several machines) by means of the following construction:—

In the general view, Fig. 1893, there is seen a stop that is secured in the required position in the T-groove shown at X in the outline view, Fig. 1894, and when this stop meets the bell crank Y it unlatches it from a lug which is on the drop box Q, Fig. 1893, hence this box falls and with it that end of the worm shaft J, throwing it out of gear with the worm wheel L, and therefore stopping the feed. The attachments giving to this machine its universal qualifications are as follows:—

The rotary vice is shown on the work table in the general view, Fig. 1893, and requires but little description. Upon the underside of the base is a circular projection having beneath it a projection fitting into the T-slots in the work table. Two segmental slots in the base admit of a rotary movement of the vice within a range of 90°, and it is held to the table by two bolts. The crank or handle of the vice is made more convenient by means of two square holes that fit the end of the screw that actuates the movable jaw. Using the central hole allows the handle to clear the work table, but when the vice jaws need to be closed with considerable force the handle is shifted to the end or outer hole, thus doubling the leverage.

THE UNIVERSAL HEAD AND BACK CENTRE.—This tool is used for making milling cutters either straight or angular, cutting small gears, either spur or bevel, fluting taps or reamers, finishing nuts or bolt-heads, and a multitude of other jobs too numerous to particularize. The head consists, as seen in Fig. 1895, of a swinging block mounted centrally between the two upright sides or jaws of a base, and is clamped in any position by a set-screw on either side. The face of one side or jaw is laid out in degrees, and a finger or pointer on the block indicates its angle of elevation. On the front end of the spindle is secured a worm wheel

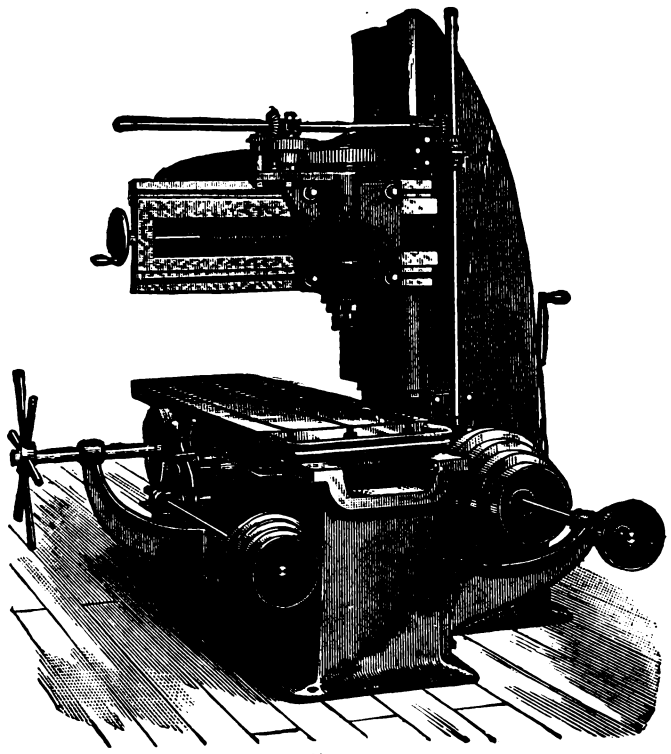

Fig. 1.

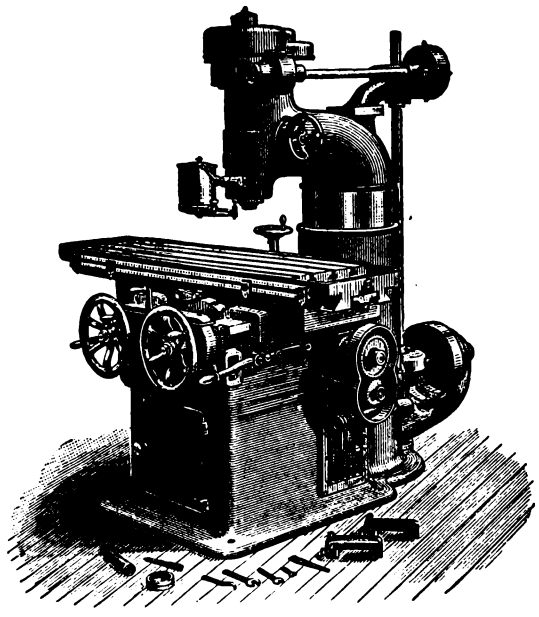

Fig. 2.

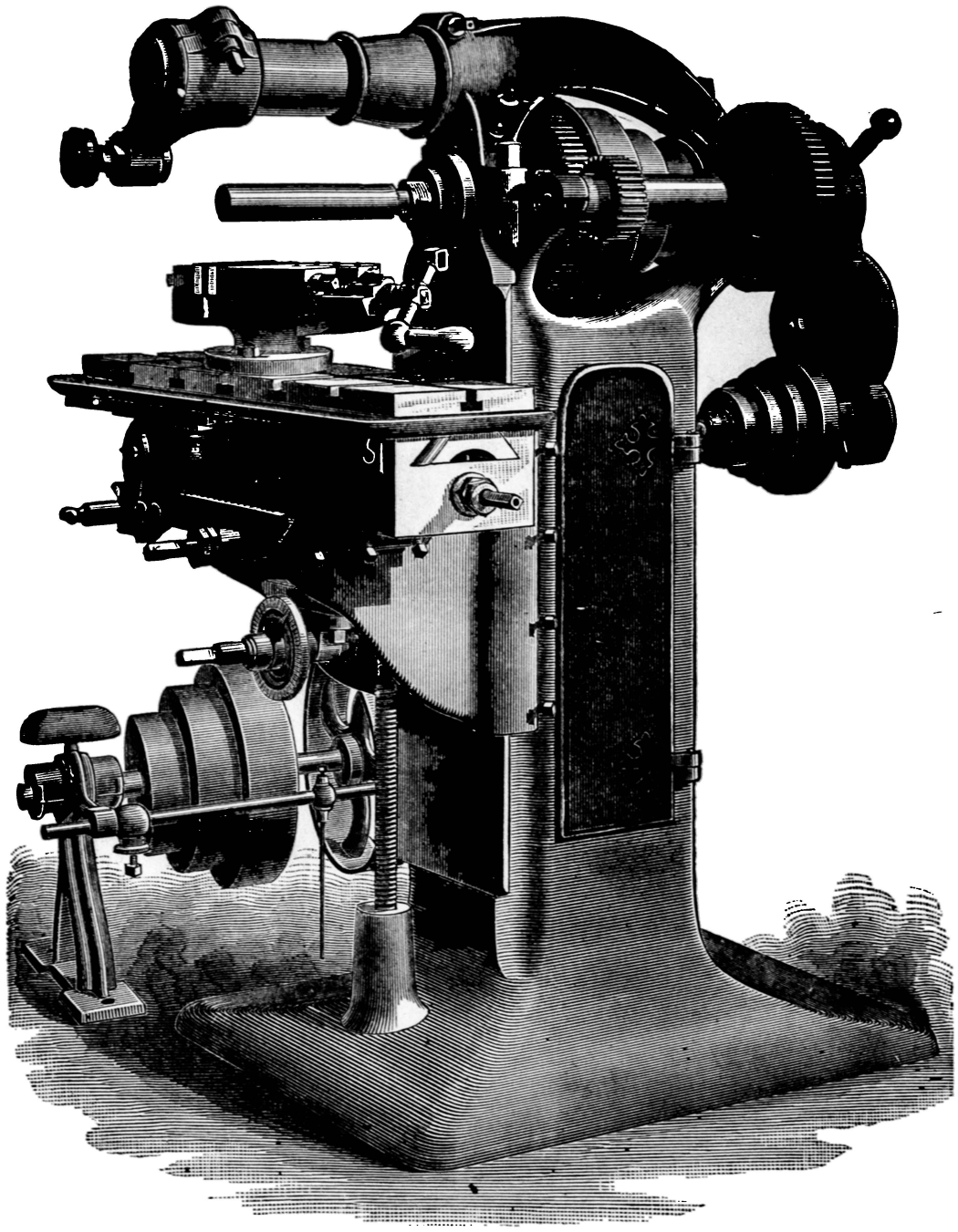

Fig. 1893

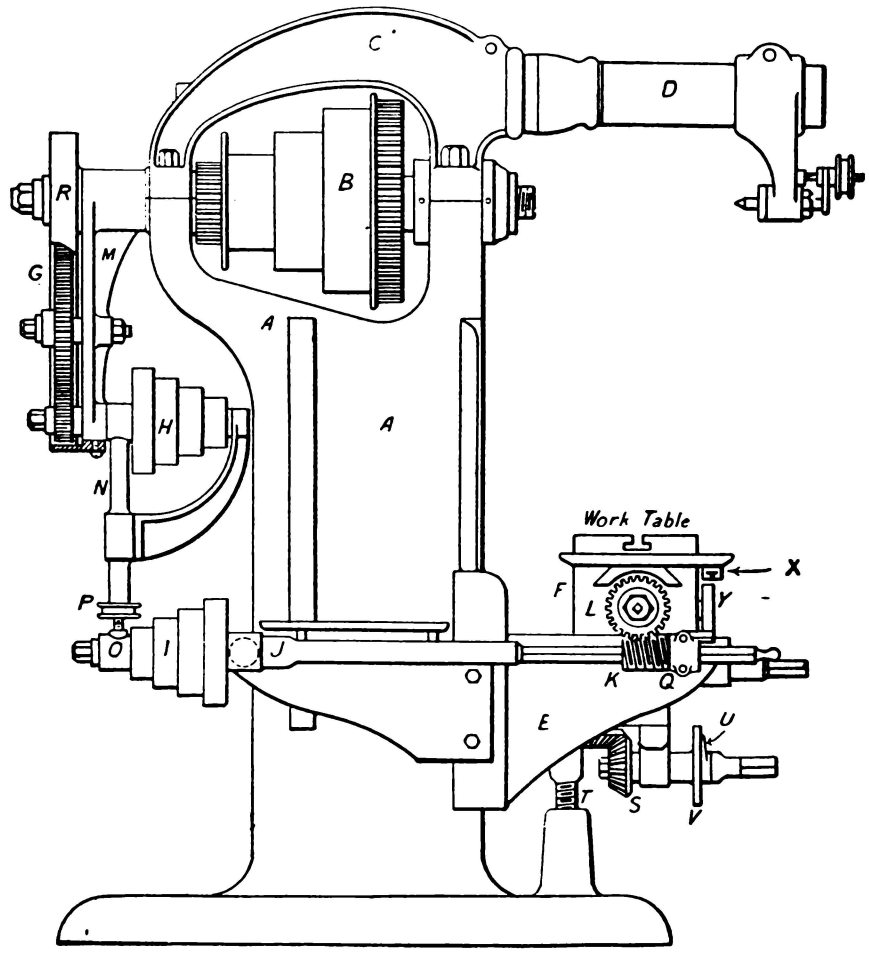

Fig. 1894.

divided longitudinally, each half being used as a corrector (in the making) for the other half till all errors are eliminated. A dial is fixed upon the bushing through which passes the shaft that actuates the worm, and consequently revolves the worm-gear and the spindle. A pointer arm carrying a handle with a pointer and appendages is secured to the end of this shaft. Under it are the usual spaces for laying off or indicating the proper number of index holes for the required fraction of a circle the spindle is to be moved through. The spindle is hollow and has a screw on the outer end for taking a chuck or face plate. It has a taper hole for receiving the proper centre, which carries a lug for holding the dog used when the work to be finished is held between centres. Three index dials, which are made interchangeable, provide for most divisions except a few prime numbers to 360.

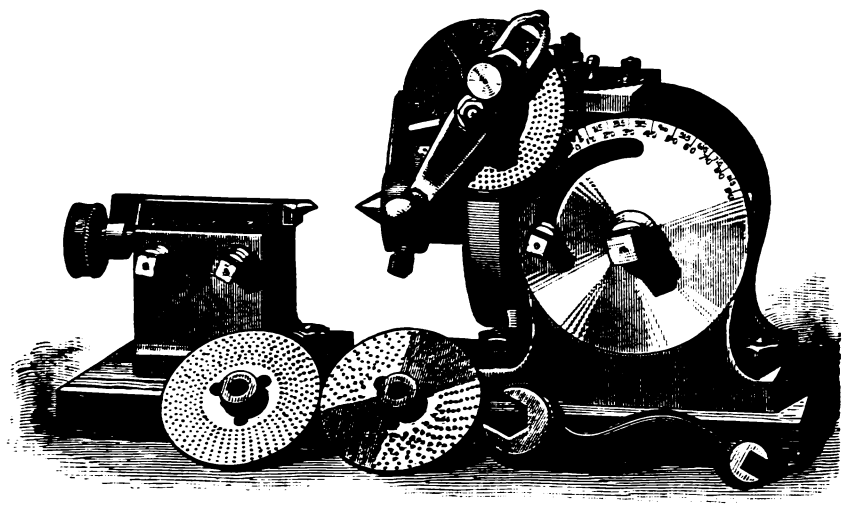

Fig. 1895.

To prevent or take up lost motion between the worm and the worm-gear the entire bracket carrying the worm and indexing mechanism is made adjustable as follows:—

Through the base of the bracket thread two sleeves whose ends abut against the top of the block, and therefore determine the engagement of the worm with the worm-wheel. Through these sleeves pass the bolts which thread into the block and lock the bracket in its adjusted position. A simple screw bolts the back end of the bracket. The degree of fit between the worm and the wheel may be very sensitively made by revolving the worm spindle by hand.

The block carrying the back centre has some peculiar features, which enable it to be set in line with the axis of the work, whether the latter be parallel or taper, so as to suit the elevation or depression of the head, and enable the centre to fill the countersink of work held on centres, keeping it central and avoiding wear to one side. It consists of a block held between two uprights or jaws, and clamped thereto by two screw bolts. The block is slotted entirely through from side to side, the front slot being only wide enough to receive the bolt and making a changeable centre for the block to partially rotate upon. The rear slot is wider and is a segment of a circle. The screw bolts being slackened the back centre is raised, lowered, or tilted to any required position to bring the centre in line with the work axis, and is then clamped in place. One bolt holds this part of the machine to the work table. The centre is adjusted to place in the end of the work in the ordinary way, with a hand nut, &c.

For gear cutting, the universal head is enlarged and somewhat modified in design, as is shown in Fig. 1896, the worm and worm-wheel being much larger in diameter and exceedingly accurate by the following method having been adopted to test them: Two cast-iron disks were placed side by side on an arbor or mandrel held between the centres, and lines of division were marked across the edges of both of them (the index plate, of course, being used for the division). The disks were then separated and one of them moved and the lines of division again compared with a microscope, and no sensible errors were apparent.

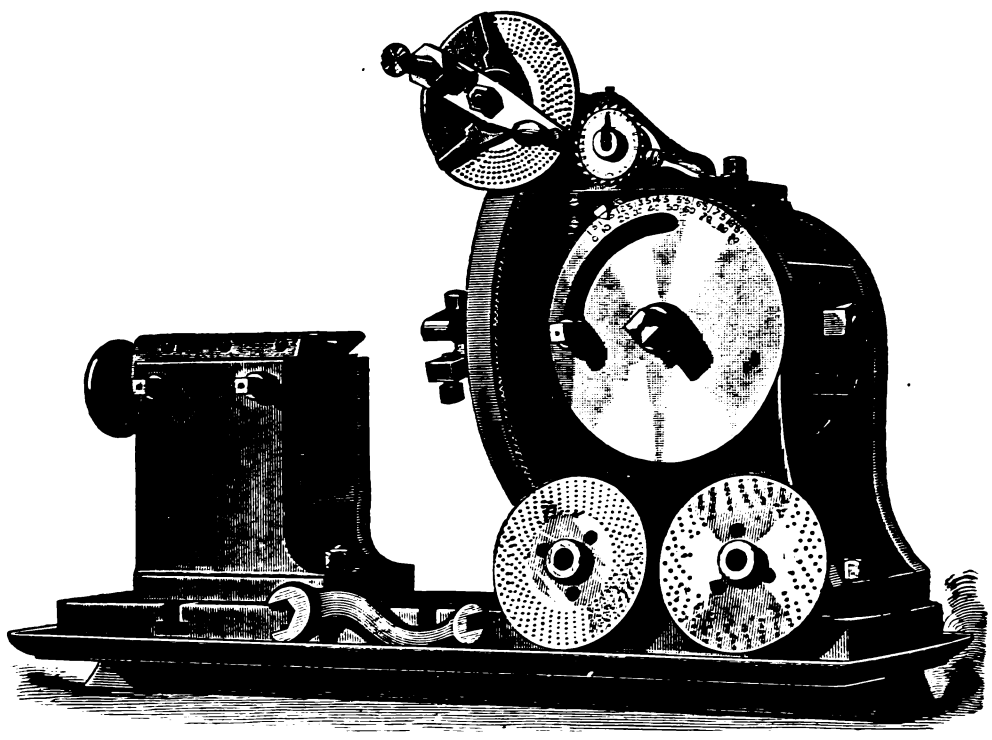

Fig. 1896.

The provisions for taking up the wear of the worm and its bearings, and of the worm and its wheel, are as follows: The worm-shaft runs in compensating bearings of phosphor bronze,

and the bracket carrying the worm-shaft is adjustable towards the worm-wheel by the means already described for the ordinary universal head, and this head is said to be capable of making divisions as fine as one minute of an arc, or dividing the circle into 21,600 parts.

The employment of a worm and a worm-wheel necessitates that the index pointer arm be given a certain number of revolutions, in order to move the spindle the requisite amount for all divisions except those equal in number to the number of teeth contained in the worm-wheel, and to avoid any mistake in counting the number of revolutions of this index pointer arm the following device is employed: On the worm shaft is a pin, and to the right of the index plate is a dial plate which is clearly shown in the engraving. The circumference of the latter is cut with ratchet teeth, and the length of the pin on the worm-shaft is such that at each revolution it moves one tooth of the dial plate. In front of the dial plate is a fixed pointer, and as the face of the ratchet wheel is graduated and marked 1, 2, 3, &c., it is obvious that the pointer shows how many revolutions the dial plate, and therefore the worm shaft, has made. After the requisite number has been made and the index pin has been set in the index wheel, the small lever, shown on the right of the dial plate, is moved and a spring brings the dial plate back so that its zero number comes back to the pointer ready to count the number of revolutions when the worm-shaft is revolved for the next division or movement of the worm and wheel. For this head there are three index plates drilled with 23 circles of holes, making, in combination with the worm and wheel, all divisions up to 90, all even divisions up to 180, with most of the other divisions between 90 and 180, or 135 divisions and multiples of these divisions up to 16,200. The index plates are interchangeable, and additional ones for other divisions may obviously be added.

The device for cutting spirals as arranged for hand feeding is shown in Fig. 1897, while in Fig. 1898 it is shown arranged for automatic feeding, and is shown in position on the machine.

Referring to Fig. 1897 the hand wheel operates a worm engaging with a worm-wheel on the shaft of the largest gear shown in the engraving. From this gear motion is conveyed through intermediate wheels to the pinion on the same shaft as the first bevel-gear, which obviously drives the bevel-gear shown on the end of the head. The back face of this latter gear is provided with index holes, and the usual index arm and pin are provided.

The change gears provided for this device are sufficient to cut twelve different pitches, ranging from one turn in 2 inches to one turn in 6 feet. Obviously right or left-hand spirals are produced according to the direction of revolution of the hand wheel.

In the general view, Fig. 1898, the device is placed upon a box bolted to the work table, and obtains its automatic feed through the medium of the worm for the table feed.

The cam-cutting attachment, Fig. 1899, consists of a base bolted to the machine table and adjustable to any required position thereon. This base has a slideway in which a gibbed slide carrying a head is free to travel longitudinally. The pattern or former cam and the work are carried on the live spindle of the head, and the former cam is supported by circumferential contact with a roll carried on the vertical bracket shown on the right of the engraving. As shown, the device is arranged for cutting face cams, the cam-holding spindle being placed in line with the machine spindle. All that is necessary for cutting *cylinder* cams is to set the device with its spindle at a right angle to the machine spindle and move the supporting bracket so that its roller will meet the perimeter of the former cam. In either case the slide carrying the head is pulled forward by weights suspended over the wheel shown on the end of the base, and the feed is put on by revolving the spindle by means of the worm and worm-wheel shown in the engraving, the ordinary crank handle of the machine fitting the worm shaft.

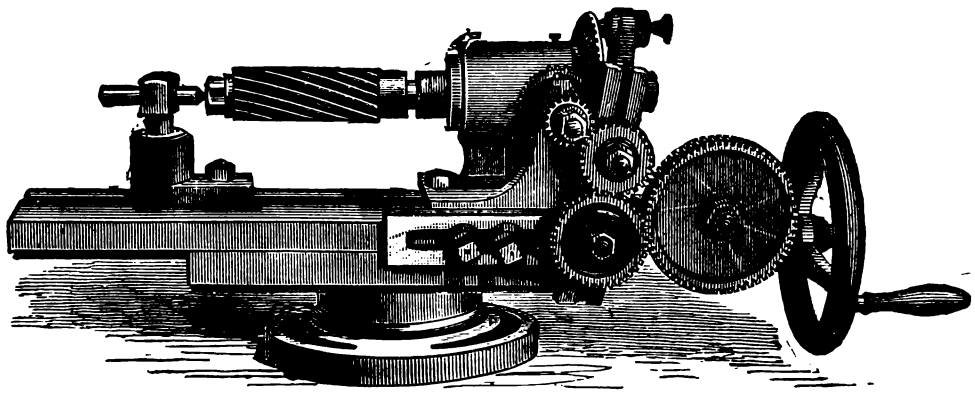

Fig. 1897.

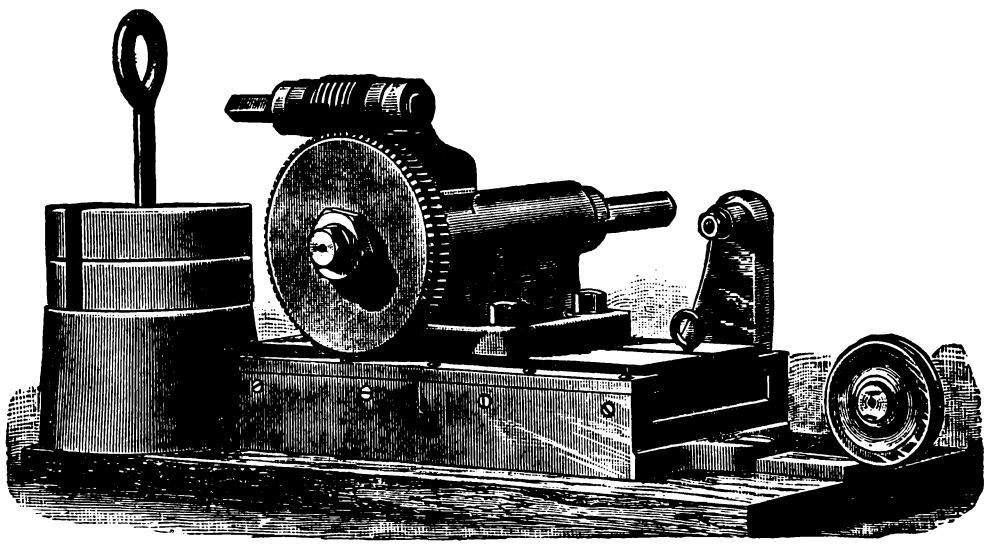

Fig. 1899.

A hand feed for cam cutters is preferable to the automatic feed, because in turning corners or curves the rate of the feed requires to be reduced in order to obtain smooth work.

Fig. 1900 represents a universal milling machine. The live spindle head is fitted to a horizontal slide on the top of the main frame, and may therefore be moved on that slideway to adjust the cutters to the work, the motion being effected by a pinion operating a rack on the underside of the head, as shown in Fig. 1901, which is a sectional view of the machine.

At the handle end of the pinion shaft there is provided a dial (which is seen in the general view of the machine) having an outer

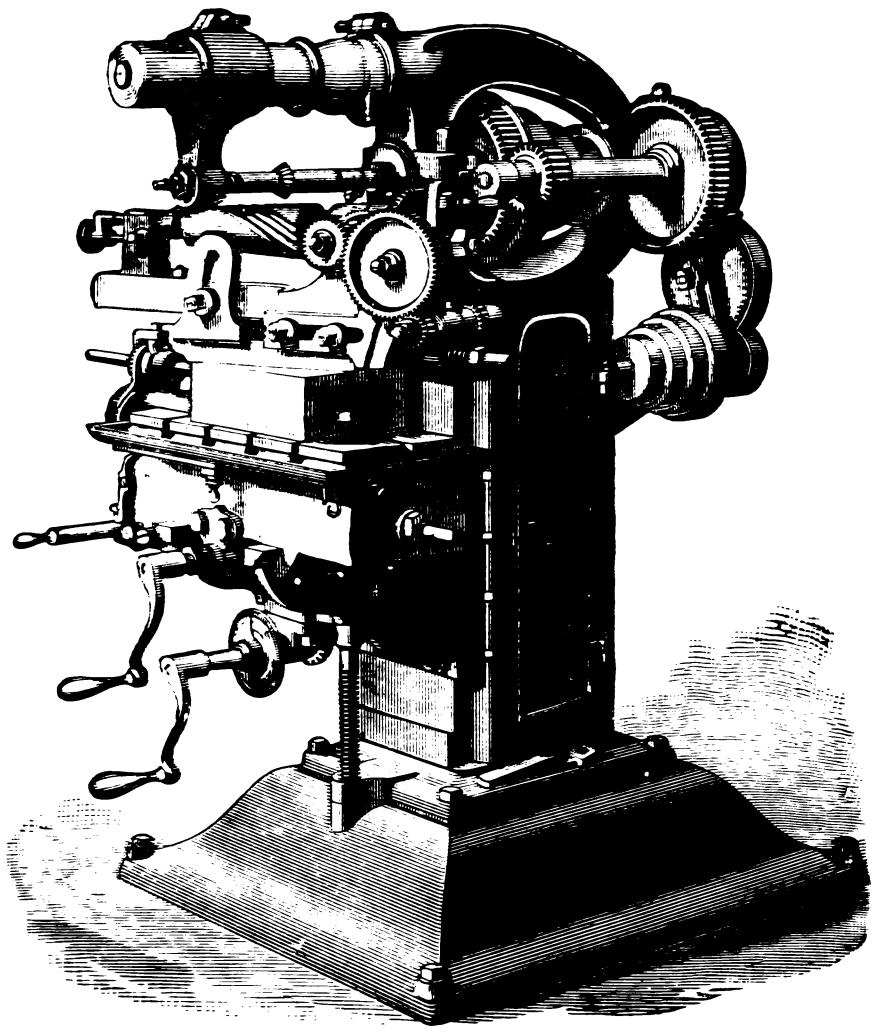

Fig. 1698.

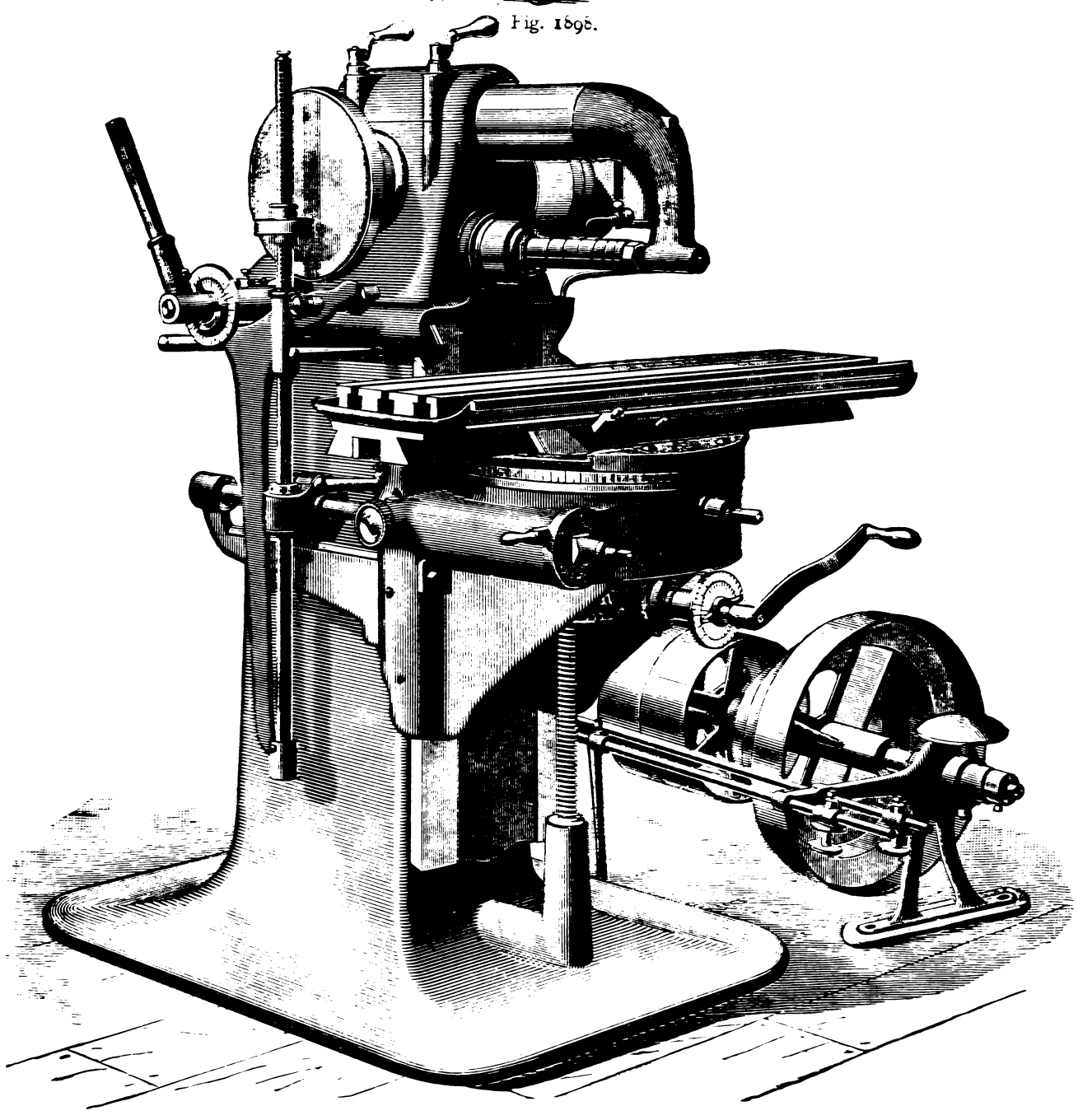

circle graduated to sixty-fourths of an inch, and an inner one graduated to fortieths of an inch. The driving shaft is at a right angle to the live spindle, and drives it by means of a hardened steel worm operating a bronze worm-wheel fast on the live spindle, and which runs in a trough of oil to provide ample lubrication.

The spindle is hollow and has tapered journals. The arm for supporting the outer end of the cutter arbor is cylindrical, and fits to a bore provided in the top of the frame of the head, which is split and has two binding screws. When these screws are loosened the arm may be readily adjusted for position, while when they are screwed up they lock the arm in its adjusted position. By this means the arm only projects out as far as the particular work in hand requires.

The knee for carrying the work table and chucking devices terminates at its top in a circular box cast open on top. This box is covered with a circular cap, in the upper face of which are the slideways or guides for the work table. The cap is recessed into the box so as to be kept central, and is fastened therein by an expanding ring operated by a single stud which projects through the walls of the box. This ring has a V-shaped groove on its periphery, which in expanding closes over corresponding bevelled ledges on the inside of both the cap and the box. The edge of the cap is graduated for cutting spirals.

By this arrangement the table can be set to move at any required angle with the live spindle and quickly clamped in position, while the ring being of larger diameter and bearing evenly around the entire circle, the cap is rigidly held. In this box, securely protected from the cuttings or dirt, is a large worm-gear secured to a short vertical shaft, on the upper end of which is a pinion projecting through the cap and engaging with a rack upon the underneath side or face of the work table. This shaft also carries a bevel-pinion which meshes with a pinion on the end of the short shaft seen projecting through the front of the box and provided with a hand crank, the hand lever shown behind this crank being for securing or releasing the cap to or from the box. The gearing is so arranged that one revolution of the hand crank traverses the work table a distance of 2 inches, thus providing for the rapid motion of the table to expedite putting in and taking out the work.

The knee is operated vertically by a pair of bevel-gears, the shaft for operating which is shown on the left-hand side of the knee. On this shaft is a pointer for an indexed dial, which has two graduated circles, the outer of which is divided so that each division corresponds to a knee motion of $\frac{1}{32}$ of an inch, while the inner one denotes a knee motion of $\frac{1}{1000}$ inch.

Automatic feed motion for the work table is provided as follows: The cone shaft projects through the live head and carries a leather-covered friction disk which drives a vertical shaft carried by a bracket hinged to the head. A small pulley splined on this shaft, and held at any point by a spring-pressed catch, bears against the leather-covered face of the disk, and it is obvious that the nearer to the centre of the disk the pulley is set the slower the latter will be revolved, and therefore the finer the feed will be, while the direction of revolution of the small pulley will be reversed if it be set on the upper half or above the centre of the disk, thus providing for reversing the direction of feed. By this arrangement both the rate and direction of the feed can be set without stopping the machine.

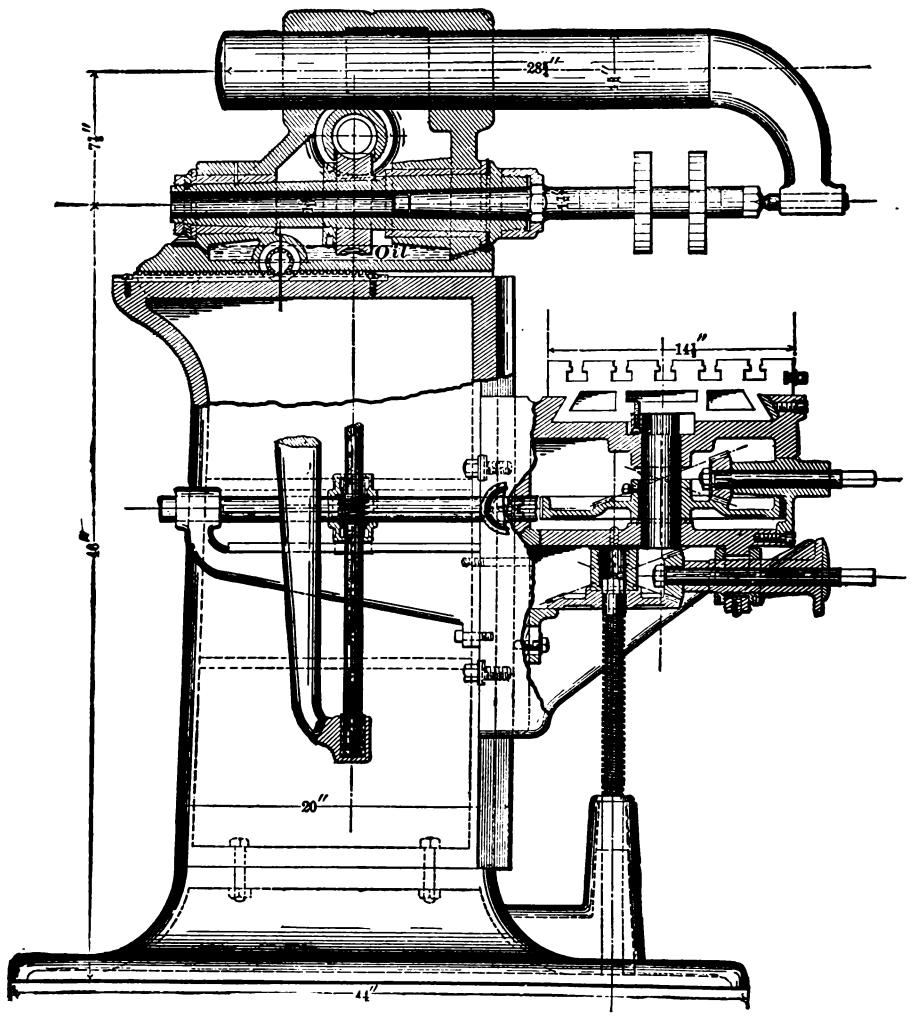

Fig. 1901.

This vertical feed shaft carries a splined worm driving a worm-gear splined on a horizontal shaft which is carried by the knee, which has a projecting arm or bracket for carrying the back end of the shaft, so that the latter rises or falls with the knee. A worm on this horizontal shaft engages a large worm-wheel within the box and fast upon the short upright shaft, whose pinion engages the table rack and thus completes the feed motion.

It will be seen in the sectional view that the worm-wheel for the automatic feed is in one piece, with a smaller bevel-wheel engaging with a bevel-pinion for the hand feed.

A clutch joint near the centre of the horizontal shaft affords the means for putting the automatic feed either into or out of action.

The table can be fed its full length in either direction, and when placed so that one end will pass the main frame or column

may be swung around parallel to the spindle, thus enabling the machine to be used as a boring mill for short holes, or by turning the table a half revolution work may be done on both sides of a piece at one chucking, thus insuring perfect parallelism.

The construction of the index head of this machine is as follows: Fig. 1902 represents it on a plate with a back centre and a centre rest, and Fig. 1903 represents the head elevated. The head is a hollow box, the outline of which is about two-thirds of a circle. The opening, in front or chord side, is surrounded by a flange, and bored out as large as permissible. This forms the front bearing of the spindle and face plate, which is cast in one piece. A rear and smaller bearing is provided on the circular part of the case. The end of the spindle projects through the case, and is held from coming out by a recessed nut and washer. The spindle also carries an accurately-divided steel gear of sixty teeth. This gear is made as large as will go through the opening in front, or about 6 inches in diameter. Directly under this gear the box is pierced from the side. In this opening is inserted a long bush, through which a steel worm engages with the gear. An index plate secured to the outer end of the bush, and an adjustable arm and index pin attached to the projecting end of the worm, complete the dividing mechanism. Substantial but delicate adjustments are provided for eliminating lost motion.

On the periphery of the case is turned a dovetail shoulder, which slides around in a corresponding groove in the quadrant-shaped base. The case is graduated on its edge, and may be clamped at any angle of elevation from 15 degrees below a horizontal line to a vertical position, being equally stable in all positions. The face plate is no farther from the bed in one position than another, and being seated to the case, and adapted to hold work directly on its face, forms a stiff and substantial device for cutting bevel-gears and other work requiring angular motion. The tail centre is also of a strong and substantial design.

An adjustable centre rest of novel design also accompanies the outfit, and an extra bed or table, with straps for securing it to the table of the machine. With the centres arranged on this bed the line of centres may be set at any angle with the sliding table. A sufficient number of index plates are provided to divide all numbers up to 100 and all even numbers to 200.

Fig. 1904 represents a machine in which the base column and the head are constructed upon the same design as that in Fig. 1900, but the circular top and cap are replaced with a larger and heavier knee of rectangular form, and the table is longer. A cross sectional view of the head is shown in Fig. 1905. The bearings for the live spindle are solid bushes slightly tapered, and are driven into the head from each end up to and against the flanges.

The spindle is of tool steel $3\frac{1}{2}$ inches in diameter at the front bearing, tapering uniformly $\frac{3}{4}$ inch per foot to the back end. This simple construction allows the spindle to be perfectly ground, and accurately fitted to the boxes by scraping. After this is done the spindle is withdrawn about the $\frac{1}{100}$ part of an inch, and a flat babbitt metal washer fitted to exactly the space between the shoulder on the spindle and the front box. A check nut and sliding collar on the back end holds the spindle in place. A perfectly uniform space for oil is thus formed between the spindle and bearings. The worm-gear is forced tightly on the taper spindle with a nut, and keyed to prevent turning.

The spindle has a hole $1\frac{9}{16}$ inches through its centre, tapering in front to receive the arbor to $1\frac{7}{8}$ inches. The taper is made $\frac{1}{2}$ inch per foot, and for ordinary work is sufficient to prevent the arbor turning, but for driving gangs or large mills an arbor is used having a hexagon enlargement just outside the spindle. A cap to screw over the end of the spindle, having a hexagon opening in it to fit the arbor, completes a positive driver that has none of the objections to cutting a mortise or keyway in the spindle or otherwise disfiguring it. This cap protects the thread on the spindle, and may be readily removed for a face plate or large facing mills.

The cone shaft and its bearings are made independent of the head. A long sleeve, which is provided with a large flange, projects through cored openings in the side of the head The bosses around these openings are faced off square and parallel, and a

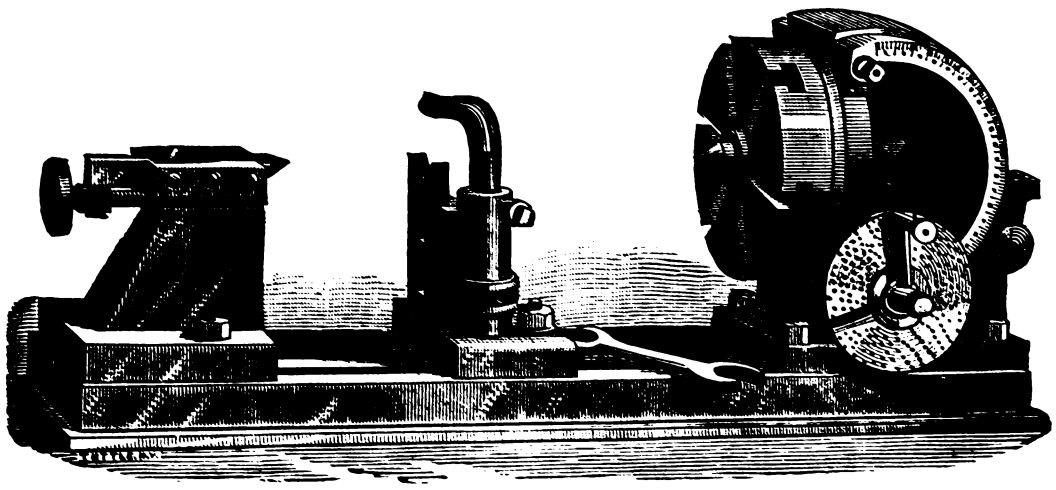

Fig. 1902.

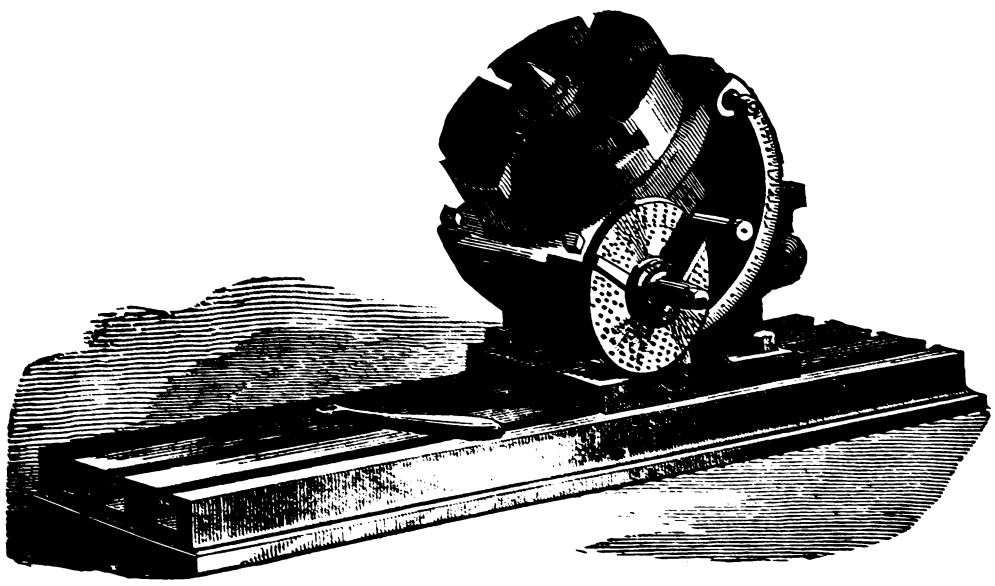

Fig. 1903.

large flat ring threaded on the end of the sleeve draws the flange against the opposite face. The large end of the sleeve is counter-

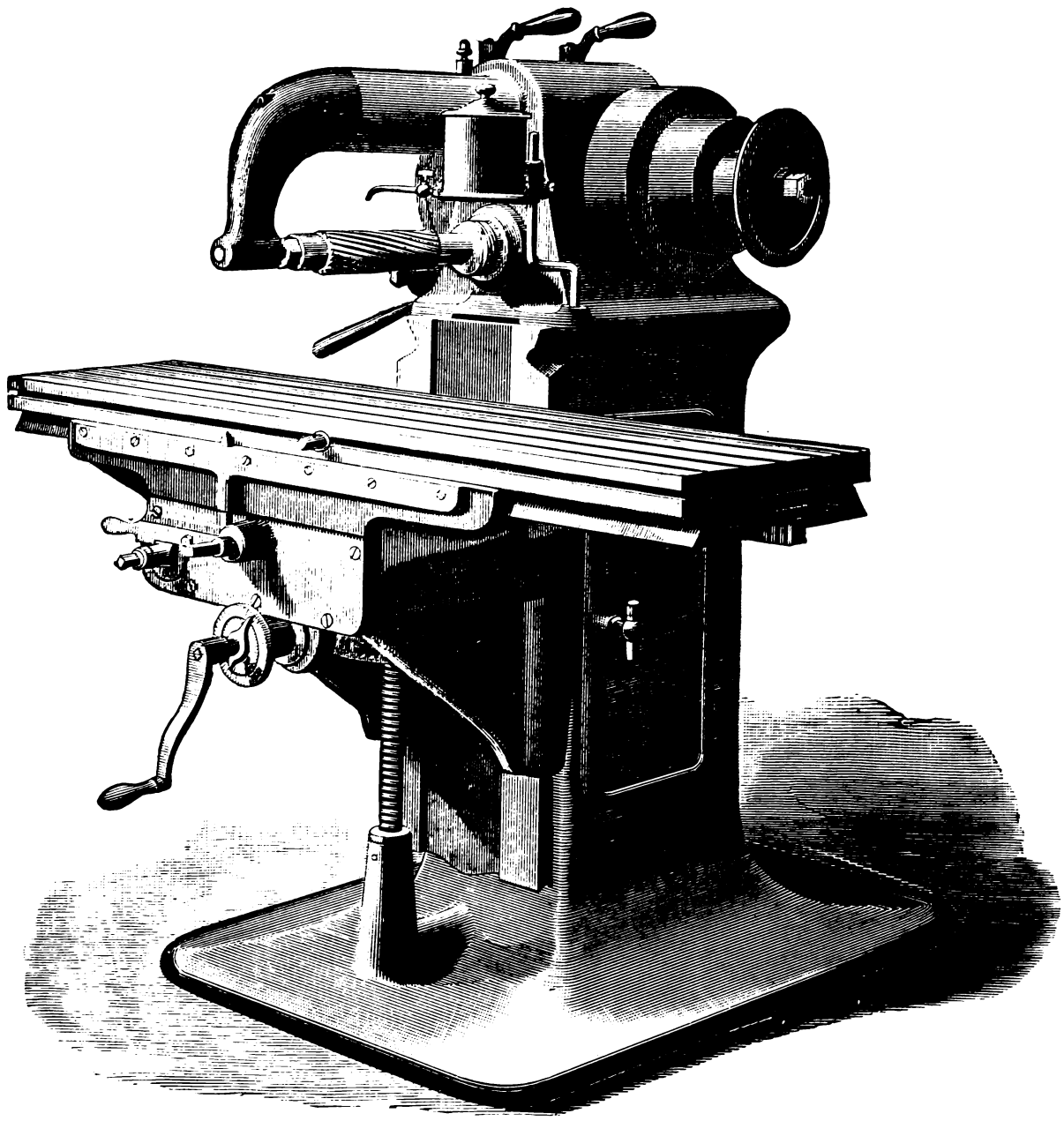

Fig. 1904.

bored to receive the worm, and is cut away on the under side to allow the worm to drop into mesh with the gear. The worm is feathered on the shaft, the thrust of the worm being taken in one

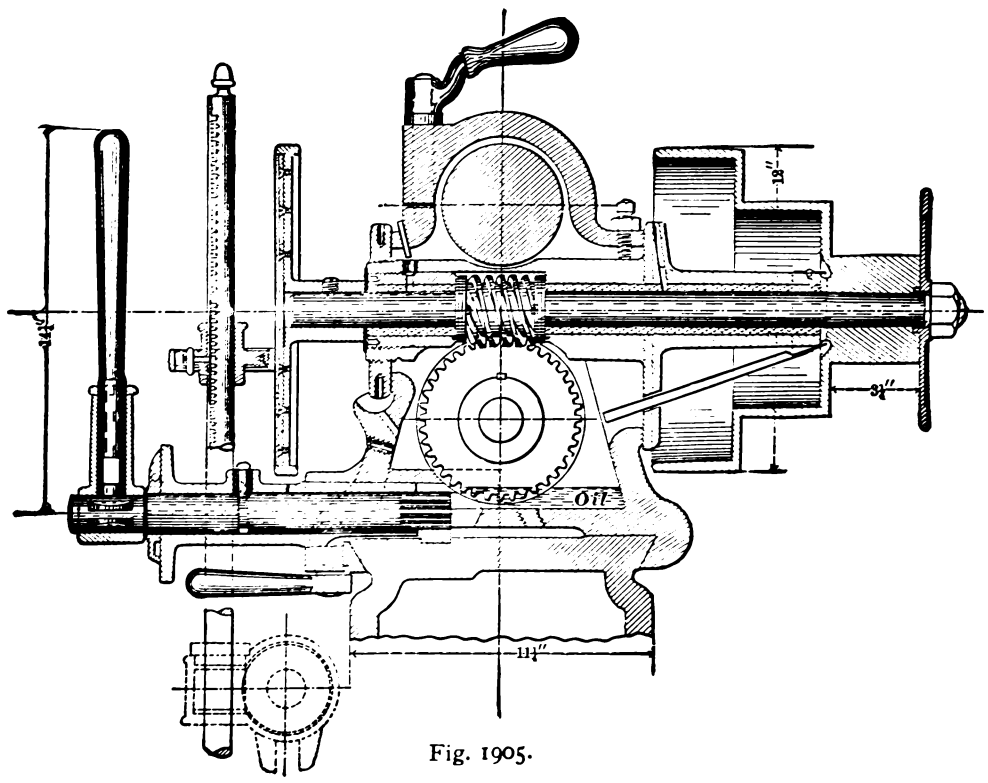

Fig. 1905.

direction against the shoulder in the sleeve, and in the opposite

direction (the machine can be driven either right or left-handed) against the end of a bush, which is screwed in the sleeve and forms one bearing for the cone shaft. Friction washers are placed to form the step, and all wear or lost motion can be removed by screwing in the bearing, which, when adjusted, is prevented from turning by a small set-screw. The cone-shaft bearings are babbitt lined, but the spindle bearings are mad of cast iron, in which steel scrap has been melted. The worm-gear has 40 teeth, and the worm is triple threaded, thus making a back gear equivalent

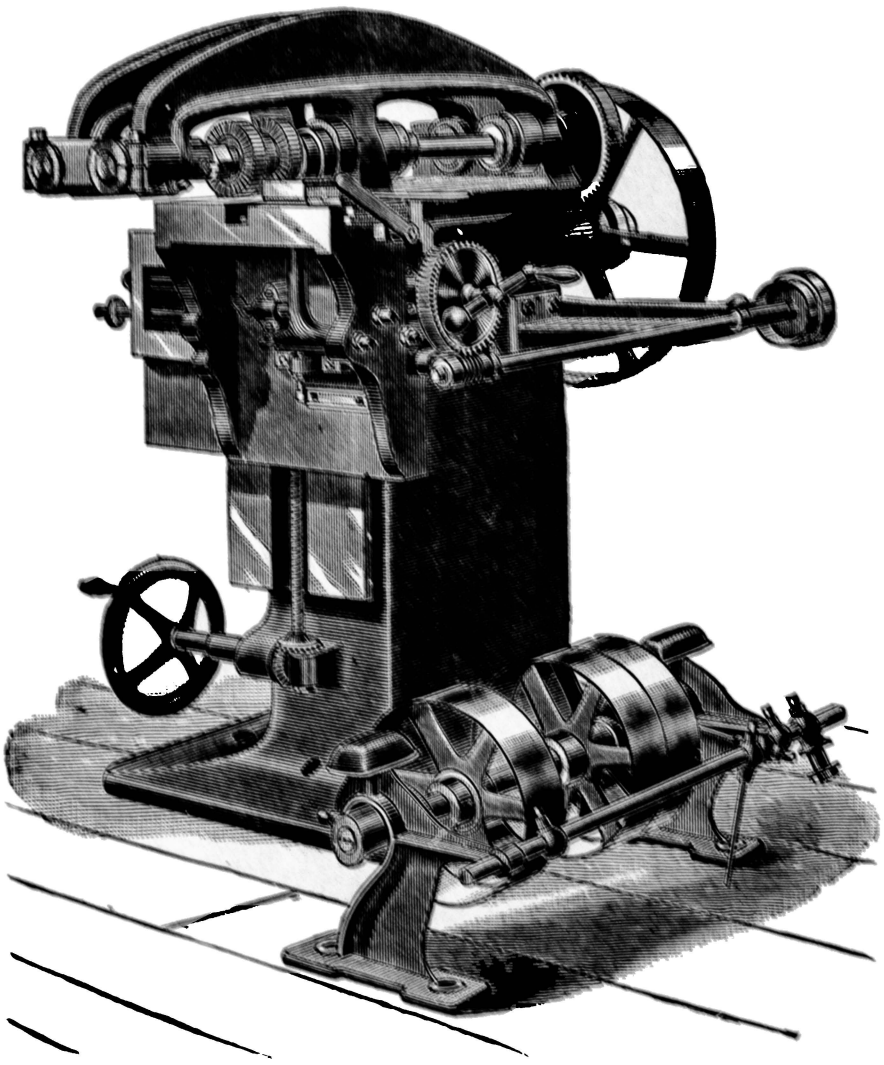

Fig. 1006.

to 40-3, or 13⅓ to 1. As the sleeve does not fit the openings in the head, the worm and gear may be readily adjusted to each other at all times, and held firmly and squarely in place by drawing the flange tight against the side of the head. Set-screws through the head prevent accidental displacement of the sleeve after being adjusted.

Fig. 1006 represents a double spindle milling machine. The second spindle is for driving the finishing cutters, so that as the two spindles are capable of independent adjustment, the work may be finished at one feed traverse, thus avoiding the necessity of removing the work or making special adjustments.

Fig. 1007 represents a milling machine for globe valves and other similar work. Here there are two cutter-driving spindles, one on each end of the bed, and the work is held vertically. It is provided with an index wheel for milling squares, hexagons, or octagons, and the pen for the index wheel is operated by treadle. The work is fed across the bed, the chucking devices being carried on a slide rest. In the figure a globe valve is shown chucked between two plugs or arbors fitting its bore, but it is obvious that centres or other work-holding appliances may be used to suit the kind of work.

Fig. 1008 represents an eighty-inch milling machine, the table of which has longitudinal motion; and provision for vertical and crosswise movements are made in the head which carries the driving mechanism.

The machine table sets l. w on a bed supported by four box legs, and is actuated by a steel screw driven by a worm and worm-gear connected with a pair of spur-gears. The gearing is outside the bed, and therefore accessible, and is protected by a shield, as shown in cut. The arrangement for belting to feed works is also shown too plainly to need description. The head upon which the spindle carrier is mounted travels in ways upon the bed, and is adjusted crosswise on it by means of a screw connected with a hand wheel, partially shown at the left of engraving. For convenience and ease in fine adjustment this wheel, and also the wheel at top of machine, connected with the elevating screw, are worked by a hand lever, the wheels having sockets in their periphery for this purpose.

The carrier, upon which is mounted the driving spindle, is gibbed to the head, and has a vertical range sufficient to allow work 18 inches high to pass under centres. From this carrier projects a large arm for outside centre support of mill spindle, intended for use on work where a back stand is not admissible. There is, however, as may be seen, a back stand or tailstock of a very solid character. The arm is readily removable, when desired, or the tailstock can be slid off its seat if required. In most cases, however, the arm need not be removed, the yoke on it being swung up out of the way, leaving the centre of mill arbor free to engage with that on the back stand. This combination provides for operating on a wide range of work.

As shown in the engraving, the space between head and tailstock is about 24 inches, but if required the tailstock can be made to travel in line with the head, and its support be extended to any distance desired.

The method of driving the spindle is simple and strong, and allows of free adjustment of the spindle without disarrangement of the driving and feed belts.

The cone, which is made for 3½ inch belt, is mounted in a stirrup which is pivoted to the bed, and the pinion which engages with the driving gear on the spindle is held at correct distance by a connecting yoke, and is driven by a feather.

The machine has longitudinal feed only, but where it is desired an automatic feed motion can be applied to the elevating screw in the head, giving feed in a vertical direction.

The table is arranged to be run back rapidly by power, by a device which is not seen in the engraving. As the table weighs one ton, the relief to the operator by this improvement is obvious.

All the operations of the machine are intended to be conducted from the front side, without any change in the position of the operator. The feed can be thrown out by hand at any moment by means of a rod which connects with the latch shown in the front of the cut, and the power quick-return applied; or the table can be run back by hand, and the feed thrown in by a foot lever, which lifts the drop box shown in front of cut. Adjustable dogs automatically drop the feed motion at any point.

The machine is massive in all its parts, and is intended for heavy milling of any description, but more particularly for shafting, railroad, or engineering shops, being specially adapted for

Fig. 1009.

key-seating long and heavy shafting, finishing guide bars, connecting rods, &c.

Its weight is 7,500 pounds. The work table is 7 feet long by 20 inches wide; length of longitudinal feed, 84 inches; distance between uprights, 24 inches. The cast-steel spindle is 4 inches in diameter, and the mill arbor 2½ inches diameter. Arm for outer centre support 5 inches diameter at its smallest part.

MILLING CUTTERS OR MILLS.—The simplest form of milling cutter is that shown in Fig. 1009, the teeth being equidistantly arranged upon the circumference only. Its size is usually designated by its length, which is termed the face. Thus a cutter

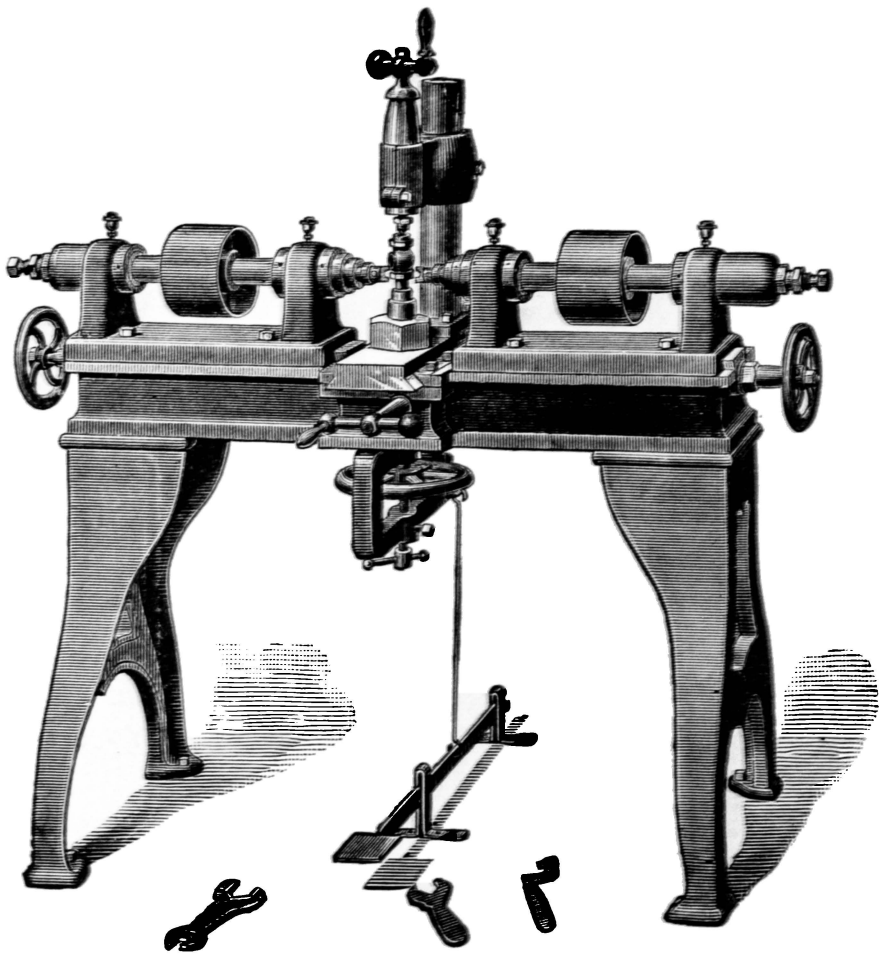

Fig. 1907.

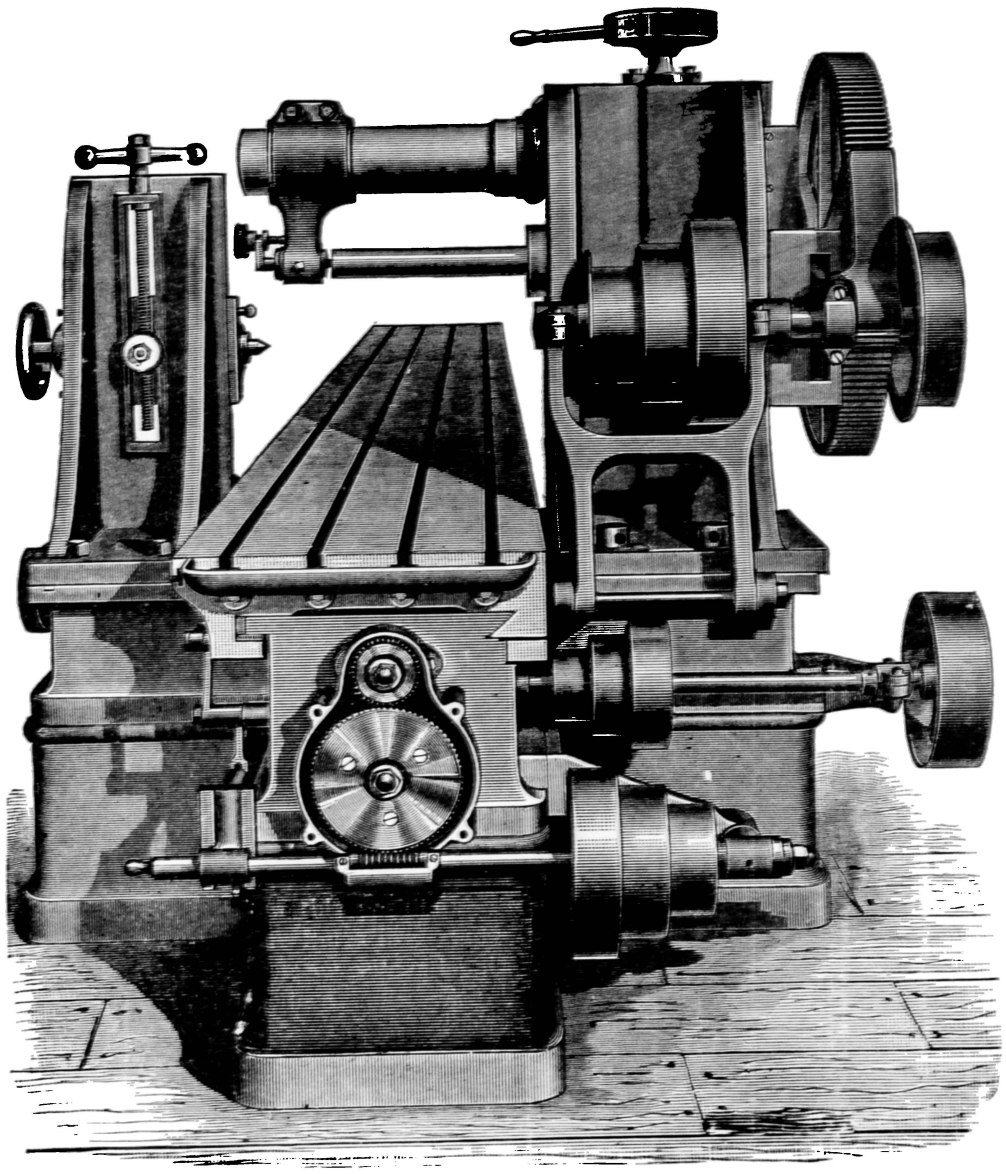

Fig. 1908.

having its teeth parallel to its axis and an inch long would be said to have 1 inch face. Cutters of more than about half an inch face usually, however, have their teeth cut spirally, as in Fig 1910; the degree of spiral is one turn in a length of 3 inches for cutters between $2\frac{1}{4}$ and 4 inches in diameter. For cutters of less than $2\frac{1}{4}$ the degree in the spiral is increased; thus for an inch

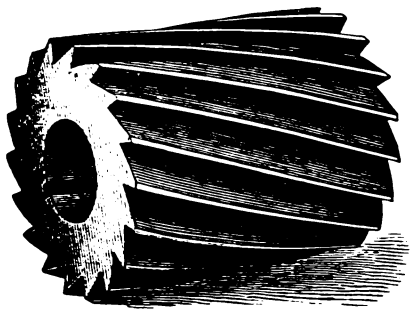

Fig. 1910.

cutter, the degree is one turn in 15 inches, while for 6 inches one turn in about 60 inches is used.

In the following table is given the sizes of cutters as made by one company, the bores being 1 inch.

Width of face.	Diameter of cutter.			Width of face	Diameter of cutter.		
inch.	inch.	inch.	inch.	inch.	inch.	inch.	inch.
$\frac{1}{8}$	$2\frac{1}{2}$	3	4	$\frac{15}{16}$	$2\frac{1}{2}$	3	4
$\frac{3}{16}$	$2\frac{1}{2}$	3	4	1	$2\frac{1}{2}$	3	4
$\frac{1}{4}$	$2\frac{1}{2}$	3	4	$1\frac{1}{8}$	$2\frac{1}{2}$	3	4
$\frac{5}{16}$	$2\frac{1}{2}$	3	4	$1\frac{1}{4}$	$2\frac{1}{2}$	3	4
$\frac{3}{8}$	$2\frac{1}{2}$	3	4	$1\frac{1}{2}$	$2\frac{1}{2}$	3	4
$\frac{7}{16}$	$2\frac{1}{2}$	3	4	$1\frac{3}{4}$	$2\frac{1}{2}$	3	4
$\frac{1}{2}$	$2\frac{1}{2}$	3	4	2	$2\frac{1}{2}$	3	4
$\frac{9}{16}$	$2\frac{1}{2}$	3	4	$2\frac{1}{4}$	$2\frac{1}{2}$	3	4
$\frac{5}{8}$	$2\frac{1}{2}$	3	4	$2\frac{1}{2}$	$2\frac{1}{2}$	3	4
$\frac{11}{16}$	$2\frac{1}{2}$	3	4	3	$2\frac{1}{2}$	3	4
$\frac{3}{4}$	$2\frac{1}{2}$	3	4	$3\frac{1}{2}$	$2\frac{1}{2}$	3	4
$\frac{13}{16}$	$2\frac{1}{2}$	3	4	4	$2\frac{1}{2}$	3	4
$\frac{7}{8}$	$2\frac{1}{2}$	3	4				

The keyways are semicircular, the key being composed of a piece of No. 25 Stubbs steel wire.

The following is a table of the sizes of milling cutters made by another company.

Width of face.	Diameter of cutter.	Size of hole.	Width of face.	Diameter of cutter.	Size of hole.
inch.	inch.	inch.	inch	inch.	inch.
$\frac{1}{8}$	$2\frac{1}{4}$	1	$\frac{3}{4}$	$2\frac{7}{8}$	1
$\frac{3}{16}$	$2\frac{1}{4}$	1	$\frac{7}{8}$	$2\frac{7}{8}$	1
$\frac{1}{4}$	$2\frac{1}{2}$	1	1	$2\frac{1}{2}$	1
$\frac{5}{16}$	$2\frac{1}{2}$	1	$1\frac{1}{4}$	$2\frac{1}{2}$	1
$\frac{3}{8}$	$2\frac{5}{8}$	1	$1\frac{1}{2}$	$2\frac{3}{4}$	1
$\frac{7}{16}$	$2\frac{5}{8}$	1	$1\frac{3}{4}$	$2\frac{1}{2}$	1
$\frac{1}{2}$	$2\frac{3}{4}$	1	2	$2\frac{1}{2}$	1
$\frac{9}{16}$	$2\frac{3}{4}$	1	$2\frac{1}{2}$	$2\frac{1}{2}$	1
$\frac{5}{8}$	$2\frac{3}{4}$	1	3	$2\frac{1}{2}$	1
$\frac{11}{16}$	$2\frac{7}{8}$	1			

Cutters of 1 inch face and over have teeth of a spiral form.

The object of providing spiral teeth is to maintain a uniformity of cutting duty at each instant of time.

Suppose, for example, that the teeth are parallel to the cutter axis, when the cutter first meets the work the tooth will take its cut along its full length at the same instant, causing in wide cuts a jump to the work because of the spring of the various parts of the work-holding devices, and of the cutter driving spindle; furthermore as the cutter revolves the number of teeth in action upon the work varies. Thus in Fig. 1912 it is seen that one tooth only is in action, but when the cutter has revolved a little more there will be two teeth in action, as shown in Fig. 1913. This variation causes a corresponding variation of spring or give to the machine, producing a surface very slightly marked by undulations. But if the teeth are cut spiral the cut begins at one end of the tooth and proceeds gradually along it, thus avoiding violent

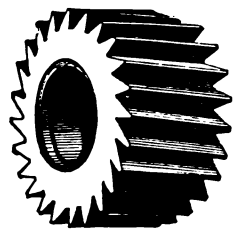

Fig. 1911.

shock, and after the cut is fairly started across the work the length of cutting edge in action is maintained uniform, producing

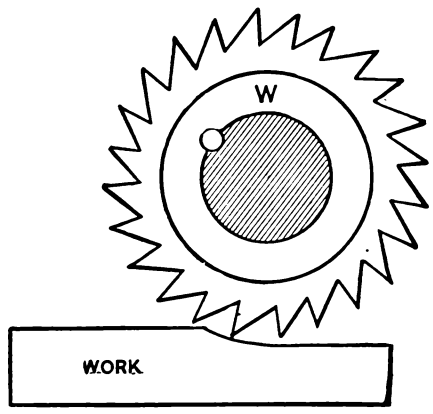

Fig. 1912.

smoother work, especially in the case of wide surfaces and deep cuts.

When the cutter is required to cut on the sides of the work as

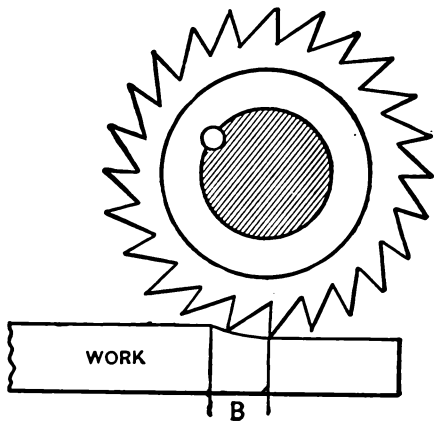

Fig. 1913.

well as on its upper face it is termed a face cutter. and its side faces are provided with teeth, as shown in Fig. 1914: and when these cutters are arranged in pairs as in Fig. 1915, so as to cut in

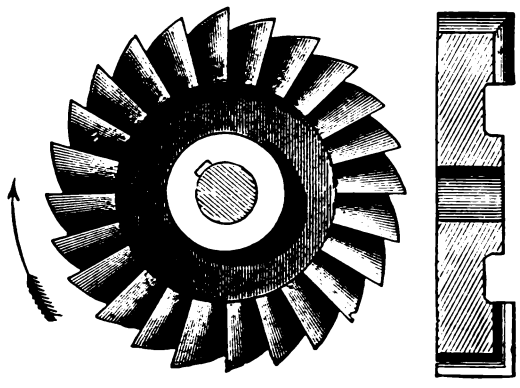

Fig. 1914.

the side faces only of the work D, they are termed twin or straddle mills, both being of the same diameter.

In mills or cutters used in this way the cutting duty is excessive

on the outer corners of the teeth, which, therefore, rapidly dull; hence it is usual to provide teeth on both sides of the cutter, as in Fig. 1916, so that after having been used in the position shown in the engraving until the teeth are dull, the positions of cutters may be changed, bringing the unused cutting edges into use.

Twin or heading cutters are right and left hand, a right-hand one being that in which the teeth at the top of the wheel revolves

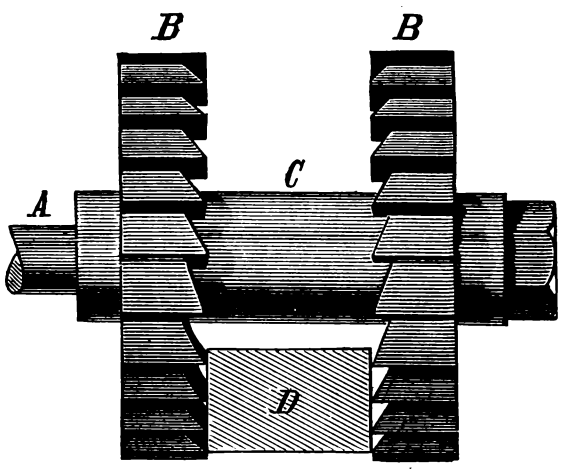

Fig. 1915.

towards the right, while a left-hand one revolves (at the top) towards the left.

If the machine is belted so that it can be revolved in either direction, both sides of the cutter may be utilised by taking the

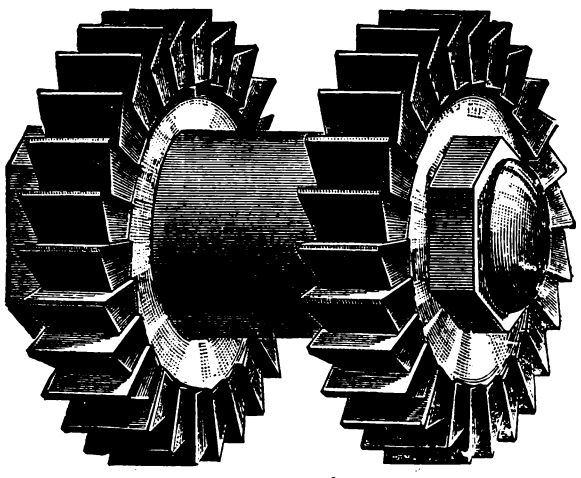

Fig. 1916.

cutters off the arbor, turning them around and then replacing them in their original positions on the same. Thus in Fig. 1917 we have at A a left-hand cutter that if reversed upon its arbor would be a right-hand one as at B, and it is obvious that the direction of revolution must be in each case as denoted bv the

the milling machine. For if the machine has a right-hand thread then the cutter must revolve in the direction of G, and the work feed must be in that of C; whereas if the machine spindle drives its chucks, arbors, &c., by a left-hand thread, then the direction of cutter revolution must be as at F, and that of work feed as at D. But if the cutters are upon an arbor that is driven by a conical seat in the machine spindle, or by any other means enabling the arbor to revolve in either direction without becoming released from that spindle, then the cutter may be simply turned around and the feed direction reversed, as already explained. The reason

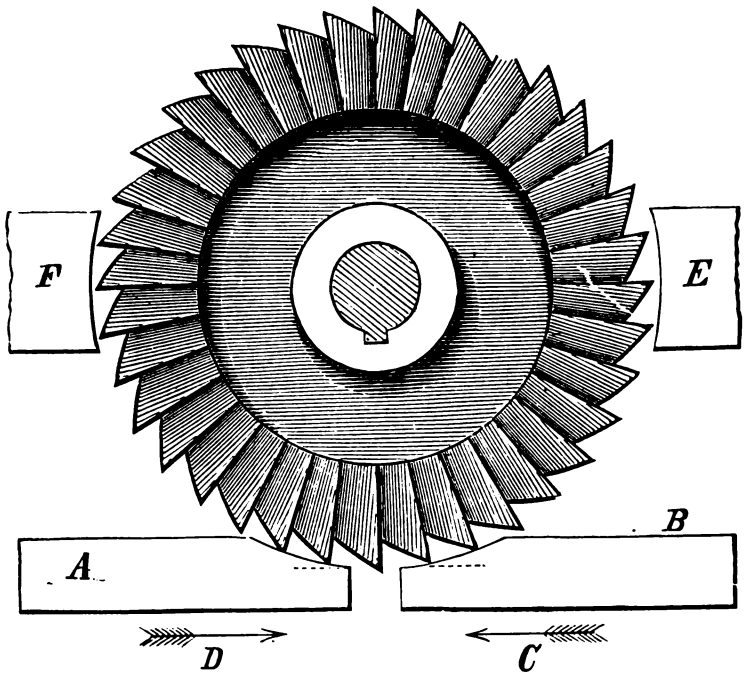

Fig. 1918.

for reversing the direction of feed when the direction of cutter revolution is reversed is as follows:—

In Fig. 1918 A and B represent two pieces of work of which B is to be fed in the direction of arrow C, so that the pressure of the cut tends to force the work back from under the cutter, whereas in the case of the work A, feeding in the direction of D, the teeth act to pull the work beneath the cutter, which causes tooth breakage.

Suppose, for example, that in Fig. 1919 P is a piece of work fastened to the table T, feeding in the direction of A, the cutter W revolving in the direction of arrow B, N representing the feed nut operated by the feed screw S. Now while the table is being pulled in the direction of A, the sides C of the feed screw thread will bear against the sides of the thread in the nut, and whatever amount of looseness there may be between the threads of the screw and nut will in this case be on the sides D of the

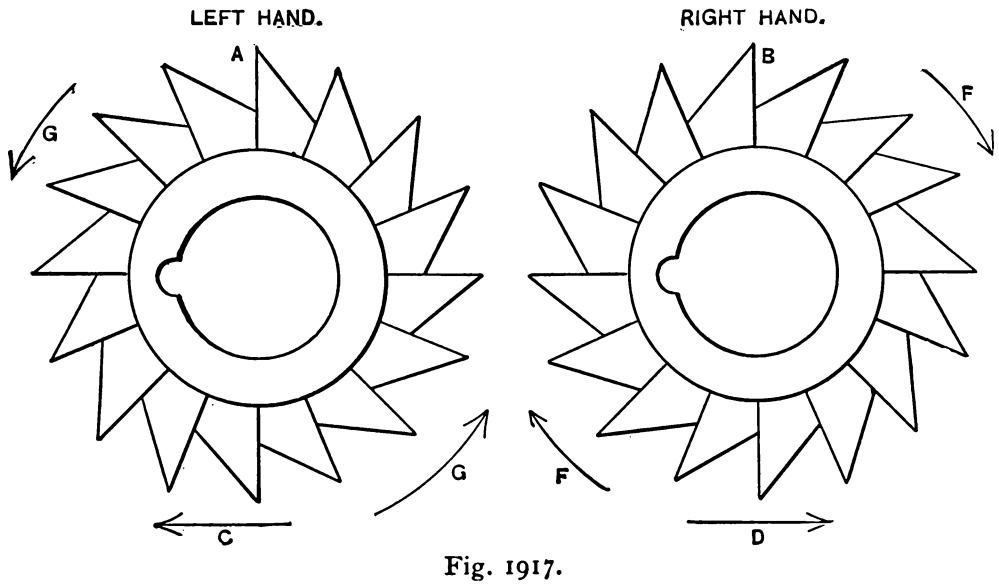

Fig. 1917.

arrows F G, which are in opposite directions. In this case the direction of work feed must be reversed, the work for A feeding in the direction of C, and that for B in the direction of D. It is to be observed, however, that the cutter could not be reversed if it was driven by an arbor that screwed upon the driving spindle of

threads. So soon, therefore, as the wheel meets the work P, it will suddenly pull the work forward to the amount of the play or looseness on the sides D of the threads, and this in addition to the feed given by the rotating screw S, would cause the wheel to lock upon the work surface.

In all milling operations, therefore, the work is fed against the cutter as at B, in Fig. 1918, unless, in the case of twin mills, it is fed (as at E and F in the same figure) in the middle of the cutters, in which case it is preferable to present it as at F, so that the pressure of the cut will tend to hold the work down to the table, and the table down upon its guideways. This position of the

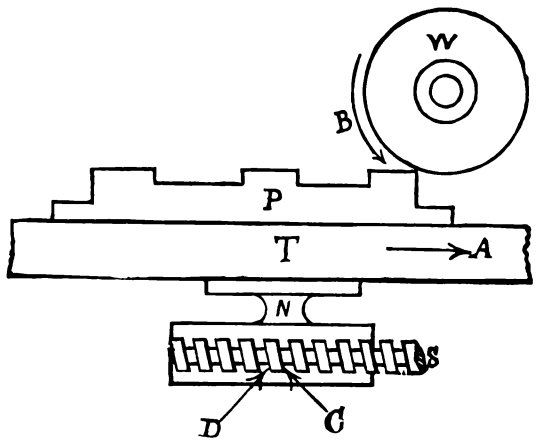

Fig. 1919.

work presents some advantages for small work which will be explained hereafter.

Fig. 1920 represents angular cutters, the teeth being at an angle to the cutter axis. These cutters are made right and left as at A and B in Fig. 1921, the teeth of A being cut in the opposite direction to those at B, so as to be able to cut equal angles on the

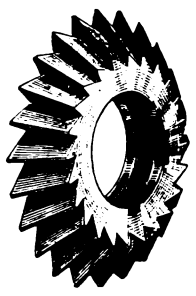

Fig. 1920.

work when these angles lie in opposite directions, as C and D in the figure. Furthermore these cutters are sometimes screwed to their arbors, and can therefore be revolved in one direction only, which prevents their being turned around end for end, even though the machine be so belted as to be capable of revolving its spindle in either direction.

The angular cutters shown in Fig. 1921 have their teeth

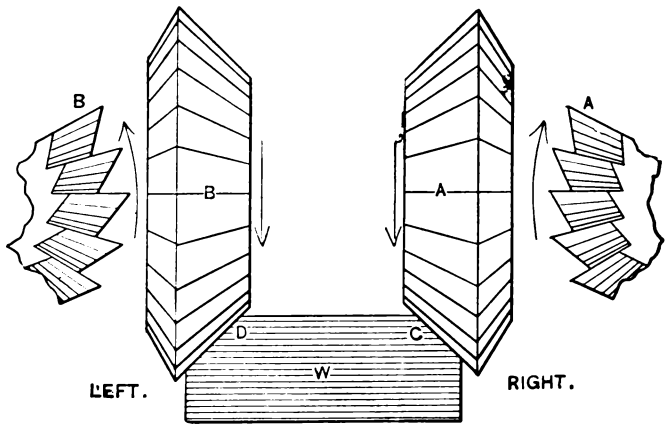

Fig. 1921.

arranged for a Brainard milling machine, in which the live spindle has a right-hand thread for driving the chucks, arbors, &c.; hence the direction of cutter revolution, and the arrangement of the teeth are as in the figure.

In Fig. 1922 are segments of two wheels, A and B (corresponding to A and B in Fig. 1921), but with their teeth arranged for a Brown and Sharpe milling machine, in which the machine spindle has a left-hand thread; hence the direction of cutter revolution is reversed, as denoted by the arrows in the two figures.

Fig. 1923 represents a round edge cutter; and it is obvious that the curvature or roundness of the cutting edges may be made to

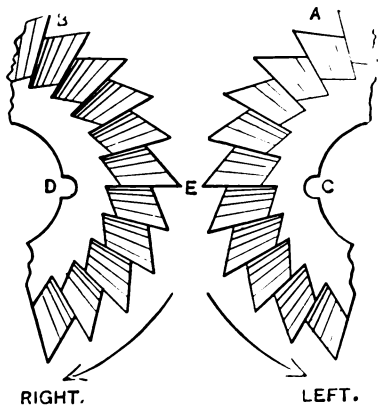

Fig. 1922.

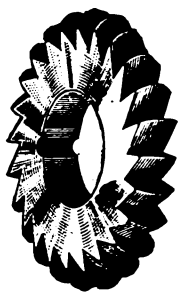

Fig. 1923.

suit the nature of the work, whether the same be of regular or irregular form. In cutters of this description it would be a difficult matter to resharpen the teeth by grinding their backs, hence they are ground on the front faces; and to maintain the form or profile of the cutting edges, notwithstanding the grinding, we have

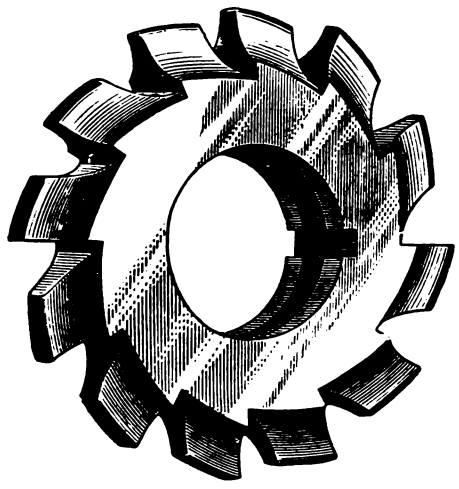

Fig. 1924.

a patent form of cutter, an example of which is shown in the gear tooth cutter in Fig. 1924. The backs of the teeth are of the same form throughout their entire length, so that grinding away the front face to sharpen the cutting edge does not alter the contour or shape of the cutting edge. This is of especial advantage in

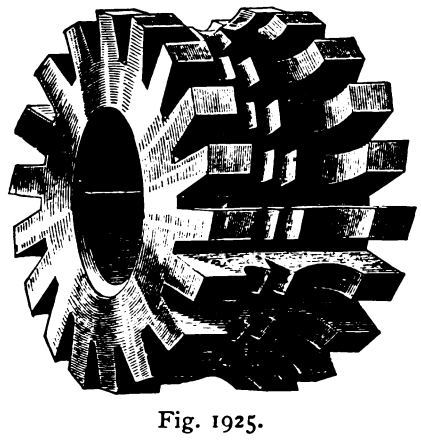

Fig. 1925.

cutters for gear teeth, and those for irregular forms, Figs. 1925, 1926, and 1927 forming prominent examples.

End mills or shank cutters are formed as in Fig. 1928, the shank sometimes being made parallel with a flat place at A, to receive the set-screw pressure, and at others taper, the degree of taper being ½ inch per foot. The hole at the end facilitates both

the cutting of the tooth in the making and also the grinding. Shank cutters may be used to cut their way into the work, with the teeth on the end face, and then carry it along, bringing the circumferential teeth into operation; or the end teeth may be used to carry the cut after the manner of a face cutter.

Shank cutters are rarely made above an inch in diameter, and

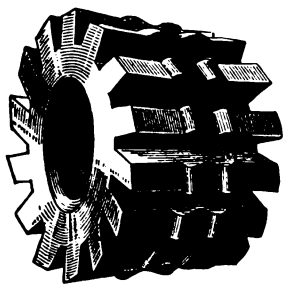

Fig. 1926.

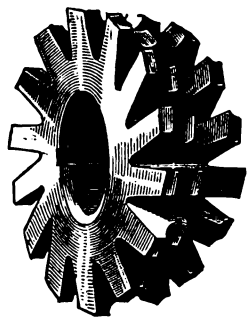

Fig. 1927.

are largely used for cutting grooves or recesses, and sometimes to dress out slots or grooves that have been cast in the work, as in the case of the steam and exhaust ports of steam engine cylinders. In work of this kind the direction of the feed is of great importance and must be varied according to the depth of cut taken on

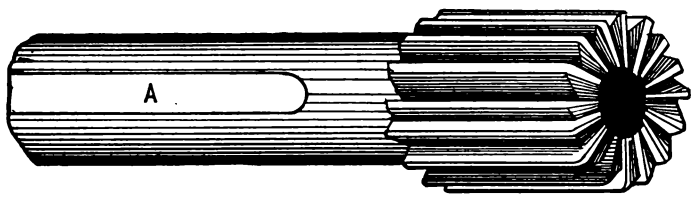

Fig. 1928.

the respective sides of the cutter. Suppose, for example, that the conditions are such as illustrated in Fig. 1929, the cut being deepest on the side A of the slot, and the cutter must be entered at the end of the slot and fed in the direction of D, so that the pressure of the cut may tend to push the cutter back, it being obvious that on the side B the cutter has a tendency to walk or

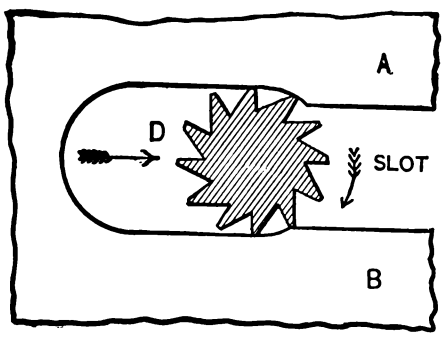

Fig. 1929.

move forward too rapidly to its cut, and if the cut was heaviest on that side it would do, this increasing the cut rapidly and causing tooth breakage.

This tendency, however, is resisted by the pressure on the side A of the slot, which acts, as already stated, to push the cutter

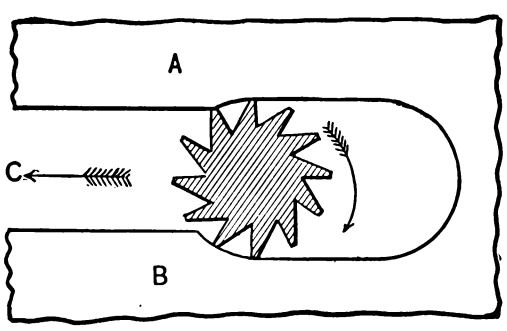

Fig. 1930.

back. In starting the cutter therefore, it is necessary to do so at that end of the slot that will cause the deepest cut to act in the direction to retard the feed. Suppose, for example, that the heaviest or deepest cut, instead of being on the side A of the slot, as in Fig. 1929, was on the side B, and in that case it would be necessary to start the cut from the other end of the slot as in Fig. 1930, the arrow C denoting the direction of feed.

Similarly when a groove has been roughed out from the solid, and it is determined to take a finishing cut, the direction of the feed for the latter is of importance. Suppose, for example, a T-groove is to be cut, and that a slot is first cut with a shank cutter as in Fig. 1931, leaving a light finishing cut of, say, $\frac{3}{64}$ inch to finish the neck to the dotted lines A B, and entering to within $\frac{1}{16}$ inch of the full depth as denoted by line C. The enlarged

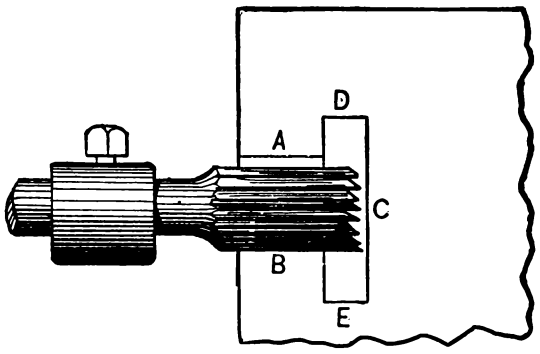

Fig. 1931.

part of the groove may then be cut out, leaving about $\frac{3}{64}$ inch at the top and bottom, D and E, the cutter having a plain shank (as in Fig. 1933), whose diameter should just clear the narrow part of the groove already roughed out. The work will then be ready for the finishing cutter, formed as in Fig. 1932, whose teeth (on both the shank and the enlarged end) should have a diameter of $\frac{3}{32}$ less than that of the finished slot. In taking the finishing cut this cutter must be set first to cut the sides B E to finished size,

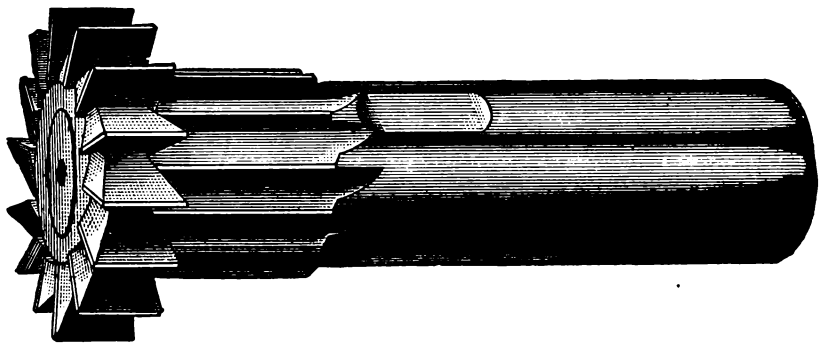

Fig. 1932.

the direction of the feed being such that the pressure of the cut acts to push the cutter back as already explained, and when the cut is finished on this side the finishing cut may be put on the side A D, without traversing the cutter back, or in other words the feed must be carried in the opposite direction, so that the cutter will run under the cut and be pushed back by it, so as to prevent it from running forward as explained with reference to figure.

For ordinary work not requiring great truth, however, the first

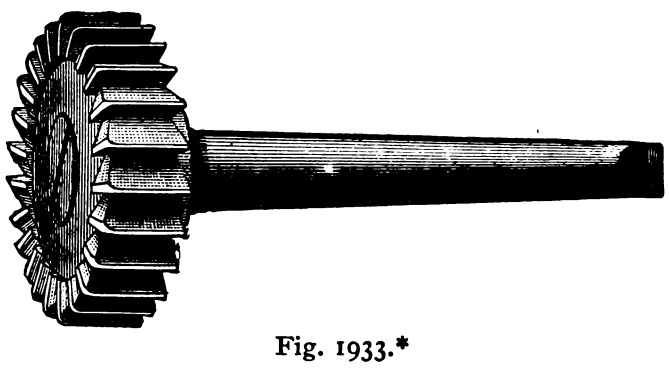

Fig. 1933.*

cutter, Fig. 1931, may be made of the finished diameter, and be followed by a cutter such as in Fig. 1933, also of the finished diameter.

When a shank cutter is required to enter solid metal endways, as in the case of cutting grooves around the circumferential surface of a cylinder, it is necessary to drill a hole to admit the cutter, leaving a light finishing cut for the diameter of the cutter, and sufficient in the depth to let the end face of the cutter remove or square up the cone seat left by the drill. Shank cutters may

* Figs. 1928, 1931, 1932, 1933, are from an article by John J. Grant, in *The American Machinist.*

obviously be made taper, or to any other required angle or curvature, Figs. 1934 and 1935 being examples which can be used in situations where other cutters could not, as for example on the arms or spokes of wheels.

Fig. 1936, from *The American Machinist*, represents an example of the employment of shank cutters, the work being a handle for a lathe cross-feed screw, and it is obvious that the

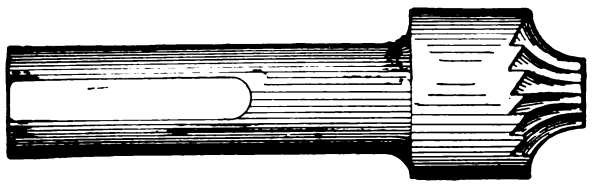

Fig. 1934.*

double cornering cutter may be used upon both edges, and the cut being carried around the hub by the parallel part of the cutter; the whole of the work on the handle including the boring, if the hole is cast in, may be done by the shank cutter, the handle end being finished and the boring done first, the hub being finished on an arbor.

Shank mills may obviously be made of various shapes; thus in

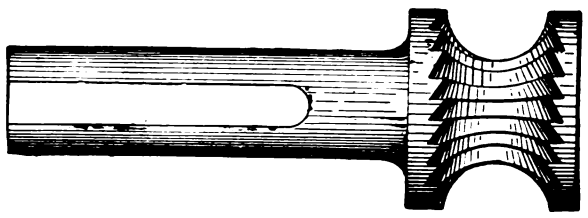

Fig. 1935.

Fig. 1937 is shown two applications of an end or shank mill, one for cutting a dovetailed groove and the other an angular one. In the case of the dovetail groove the cutter will work equally well, whether it be used on straight or spiral grooves; but this is not the case with angular grooves for reasons which are explained with reference to angular cutters and spiral groove cutting.

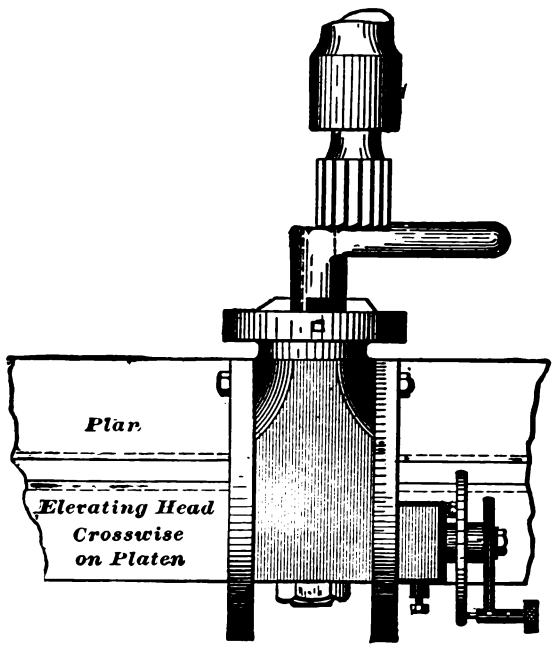

Fig. 1936.

Shank cutters are provided with finer teeth than ordinary cutters, the following being the numbers of teeth commonly employed for the respective diameters:—

Diameter of cutter	$\frac{1}{8}$ or	$\frac{3}{16}$	inch,	number of teeth		6
,,	,,	$\frac{1}{4}$	,,	,,	,,	7
,,	,,	$\frac{3}{8}$	,,	,,	,,	8
,,	,,	$\frac{1}{2}$	,,	,,	,,	8
,,	,,	$\frac{5}{8}$	,,	,,	,,	10
,,	,,	$\frac{3}{4}$	,,	,,	,,	10
,,	,,	$\frac{7}{8}$	,,	,,	,,	12
,,	,,	1	,,	,,	,,	14

* Figs. 1934, 1935, 1936, are from articles by John J. Grant, in *The American Machinist.*

The front faces of the teeth are radial as in other cutters, the angle of the back of the tooth being 40° for the smaller, 50° for the medium, and 60° for an inch cutter.

Fly cutters are single-toothed cutters, or rather tools, that are largely used by watchmakers for cutting their fine pitches of gear wheels.

Fig. 1938 represents a fly cutter in place in its holder or arbor, its front face D being in line with the axis C of the arbor.

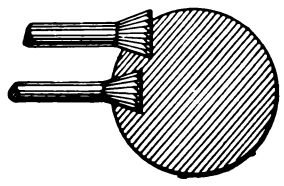

Fig. 1937.

Let it be required to make a fly cutter for a very fine pitch of gear tooth, such as used for watches, and a template, shown greatly magnified at T in Fig. 1939, is made to fill a space and one half of each of the neighboring teeth. From this template a cutting tool is made, being carefully brought to shape with an oil-stone slip and a magnifying glass. This tool is used for the

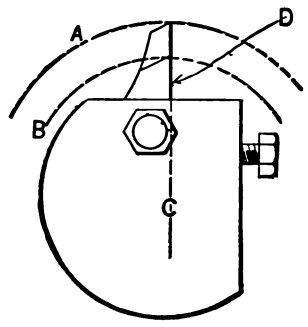

Fig. 1938.

production of fly cutters, and may be employed by either of the following methods:—

The piece of steel to form the cutter is fastened in an arbor back from the centre, as at D in Fig. 1940, and is then cut to shape by the tool before referred to. It is then set for use in the milling machine, or in such other machine as it may be used in, in the position shown in Fig. 1938, its front face D being

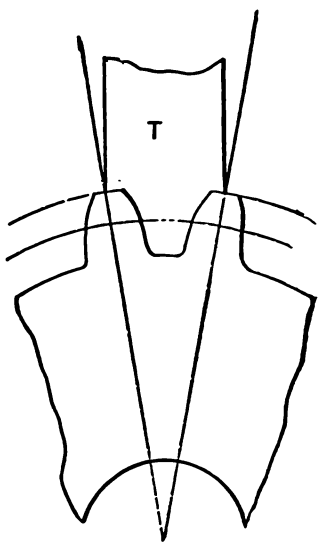

Fig. 1939.

in line with the axis C of the arbor. The change of position has the effect of giving the tool clearance, thus enabling it to cut while being of the same shape throughout its whole thickness; face D may be ground to resharpen the cutter without altering the shape it will produce. It is this capacity to preserve its shape that makes the fly cutter so useful as a milling machine tool, since it obviates the necessity of making the more expensive

milling cutters, which, unless made on the principle of the Brown and Sharpe cutters, do not preserve their shapes.

It is to be observed, however, that a fly cutter made as above does not produce work to exactly correspond to the template it was made from, because moving it from the position it was made

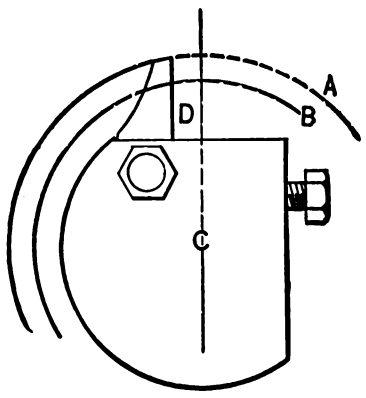

Fig. 1940.

in (Fig. 1938) to the position it is used in (Fig. 1940) causes it to cut slightly shallower, but does not affect its width.

Another method of cutting up a fly cutter by the tool made to the template is shown in Fig. 1941. The blank cutter is placed at an angle to an arbor axis, and is cut to shape by the tool.

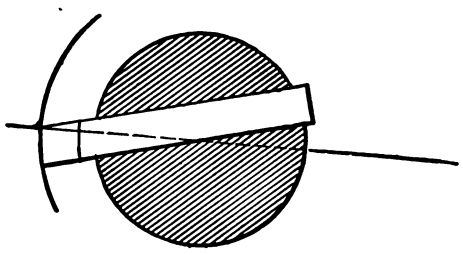

Fig. 1941.

For use it is placed in line with the arbor axis as in Fig. 1942, the change of position here again giving clearance as shown by the dotted arcs, the inside ones showing the arc the cutter revolved on when it was in the arbor in Fig. 1938. Here again, however, the change of position causes the fly cutter to produce a

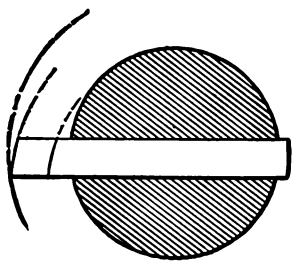

Fig. 1942.

shape slightly different from the template to which the first tool was made, hence the best method is as follows:—

The blank is let into an arbor of small diameter, as in Fig. 1943, its face D being in line with the arbor axis. It is then cut up with the tool made from the template. For use it is set in a larger arbor, as in Fig. 1944, the difference in its path of revolution giving it the necessary clearance. Thus, in the figure the

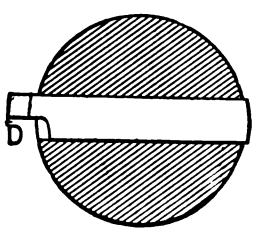

Fig. 1943.

inner dotted arcs show the path of revolution of the cutter when it was in the small arbor, and the outer arc of the path in the large arbor. The front face can be ground without altering the shapes; the cutter will produce this front face, being kept in line with the arbor axis by grinding the body of the steel as much as the front face is ground when it is resharpened. Curves or irregular shapes may be readily produced and preserved by fly cutters.

It is obvious, however, that when the tool made to the original template is worn out, another must be made, and to avoid this

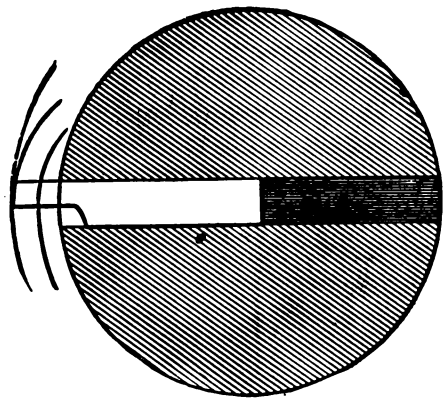

Fig. 1944.

trouble and preserve the original shape beyond possible error, we have recourse to the following additional method:—

With the tool made from the template we may cut up a wheel, such as in Fig. 1945, and this wheel we may use as a turning tool to cut up fly cutters, the principle of the wheel cutter having

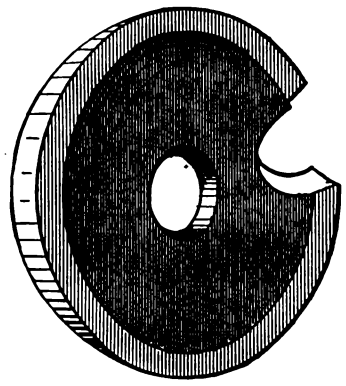

Fig. 1945.

been shown in connection with lathe tools. It may here be pointed out, however, that if a wheel or circular cutter, as it is termed, is to be used, we may make the template, and the master tool we make from it, for one side of a tooth only, and use the

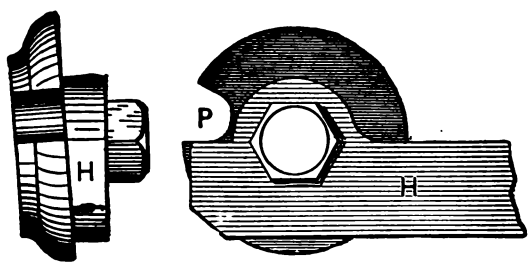

Fig. 1946.

master tool to cut up one side only of the corner of the circular cutter, as shown in Fig. 1945.

The method of using the circular cutter is illustrated in Fig. 1946, in which H is a holder, whose end face P is level with the axis of the cutter, which is held to the holder by a screw. The

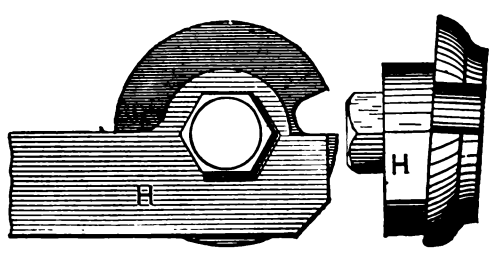

Fig. 1947.

side face of the holder is out of the vertical so as to give the cutter side clearance. A second holder has its side face inclined in the opposite direction, thus enabling the one edge of the circular cutter to be used as a right or as a left-hand tool and insuring uniformity, because the same edge of the circular cutter

is used in both cases, so that if used for say a tool for a gear tooth, both sides of the tool will be cut from the same side of the circular cutter.

It is obvious that instead of having one continuous cutter, the necessary breadth of cutter face may be obtained by means of two or more cutters placed side by side. Thus to mill a piece of work two inches wide we may use two cutters of an inch face each (both of course being of equal diameter), or we may use one cutter of 1¼ inch and another of ¾ inch face. It is preferable, however, to use two cutters of an inch face each, and to set one beam left-hand and the other right-hand spiral teeth, because spiral teeth have considerable tendency to draw the machine spindle endways in its bearings, because the teeth correspond to a certain extent to a screw, and the work to a nut. A cutter

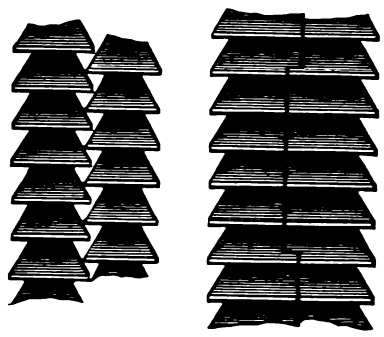

Fig. 1948.

with a left-hand spiral exerts end pressure tending to draw the driving spindle out from its bearings, while a right-hand one tends to push it within them ; hence by making the two cutters of equal length and of the same degree of spiral, the effect of one cutter offsets that of the other. Furthermore, it is found that the tendency to chatter which increases with an increase in the width of the work, is diminished by using right and left spiral cutters side by side.

In order that the cutting edges of cutters placed side by side in this way may be practically continuous so as not to leave a line on the finished work, the teeth may be made to overlap in

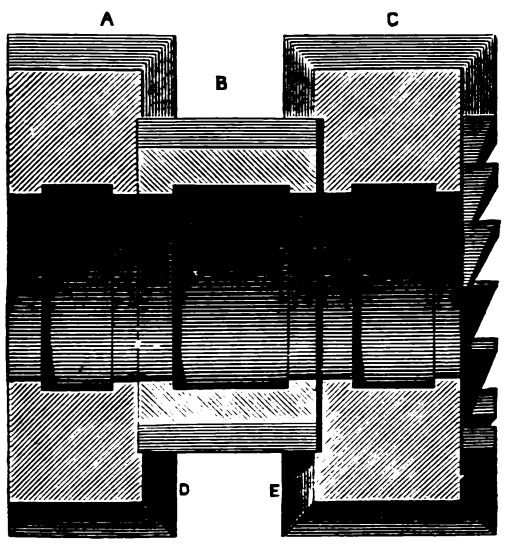

Fig. 1949.

two ways as in Fig. 1948, both representing magnified portions of cutters. In the method shown on the left of the figure the usefulness of either cutter to be used singly is not impaired, all that is necessary to insure the overlapping being to cut the keyways in different positions with relation to the teeth ; whereas on the left of the figure neither cutter would be efficient if used singly, except upon work as narrow as the narrowest part of the cutter. On the other hand, however, it affords excellent facilities for grinding, since the two cutters may be ground together, thus ensuring that they be of equal diameters except in so far as may be influenced by the wear of the emery wheel, which is, however, almost inappreciable even in cutters of considerable width of face. In the method shown on the left there is the further advantage that as the teeth are not in line the cutting action is more continuous and less intermittent, the arrangement having in a modified degree the same advantage as the spiral cutter.

In both methods some latitude is given to adjust the total width of face by placing paper washers between the cutters. If the plan on the right is employed the projections may occupy one-fourth of the circumference, there being two projections and two depressions on one end of the cutter. When cutters of

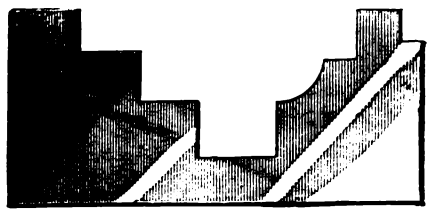

Fig. 1950.

different diameters and shapes are put together side by side on the same arbor the operation is termed gang milling.

Thus, in Fig. 1949 is shown a sectional view of a gang of three mills or cutters, A, B, and C, of which A and C are recessed to admit of the ends of B passing within them. The heavy black line representing a paper washer inserted to adjust the distance apart of A and C, it being obvious that this gives a means of letting them together after their side teeth at D and E have been ground. As shown in the figure, A has teeth on one only of its sides, while C has them on both sides as well as in its circumference, while all three are of different widths of face. This would capacitate A only for the inside cutter, as in the figure, while B would be serviceable only when there was a cutter on each side of it ; or if used singly, only when its face overlapped the width of the work on each side. But C, being cut on each side, could be used singly for grooving or recessing, or for plain milling, or in the position of B or A in the figure ; hence it is preferable in gang milling for general purposes to provide teeth on both sides as well as on the circumference of the mill or cutter. But if a gang of mills are to be made for some special purpose, and used for no other, the teeth may be provided on the sides or not, as the circumstances may require.

Suppose, for example, that steps, such as shown in Fig. 1950, were required to be cut in a piece of brass work, and that, the work requiring to be very true, a set of roughing and one of finishing cutters be used, then the latter may be put together as

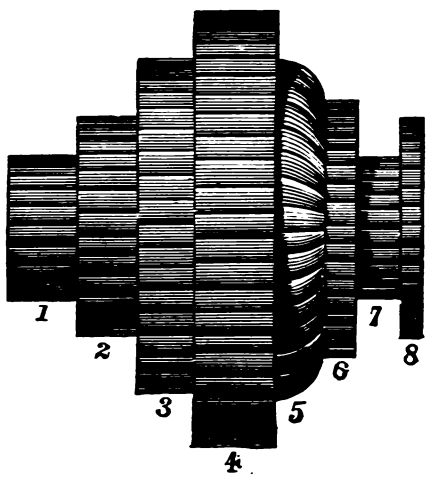

Fig. 1951.

in Fig. 1951, there being eight separate cutters, and their ends being slightly recessed but without teeth. Such cutters would wear a long time and may be readily sharpened, and there being no side teeth, the widths of the cutters, individually and collectively, would not be altered by the grinding ; hence no readjustment with washers would be necessary. The tooth corners must, however, be kept sharp, for in proportion as they get dull or blunt, the sides of the cutter wedge in the work, causing friction and extra power to drive them as well as producing inferior work.

Fig. 1952, which is from an article by John J. Grant, represents a gang of cutters arranged to mill out the jaws and the top faces of a head for a lathe; and it is obvious that a number of such heads may be set in line and all milled exactly alike.

THE NUMBER OF TEETH IN MILLS OR CUTTERS.—The teeth of cutters must obviously be spaced wide enough apart to admit of the emery wheel grinding one tooth without touching the next one, and the front faces of the teeth are always made in the plane of a line radiating from the axis of the cutter.

In cutters up to 3 inches in diameter, it is good practice to provide 8 teeth per inch of diameter, while in cutters above that diameter the spacing may be coarser, as follows :—

Diameter of cutter	6	inches,	number of teeth	in	cutter	40
"	"	7 "	"	"	"	45
"	"	8 "	"	"	"	50

MILLING CUTTERS WITH INSERTED TEETH.—When it is required to use milling cutters of a greater diameter than about 8 inches, it is preferable to insert the teeth in a disk or head, so as to avoid the expense of making solid cutters and the difficulty of hardening them, not merely because of the risk of breakage in hardening them, but also on account of the difficulty in obtaining the uniform degree of hardness or temper. The requirements for the heads for inserted teeth are, that the teeth shall be locked firmly in position without lost motion, and be easily set to gauge, ease of insertion and of removal being of secondary consideration, as such teeth should be ground in their places in the head, and are therefore rarely removed. The manner in which these requirements are attained in the Brainard heads are, as shown in Fig. 1953. A disk of wrought iron of suitable thickness and diameter is turned and squared, then a circle of index holes corresponding to the number of teeth required is drilled in its face; this circle of holes is used to insure the accurate spacing of the dovetail seats for the teeth, and to attain accuracy in grinding the teeth. All the teeth are a driving fit, and being milled are, of course, interchangeable. In order to obtain a larger number of teeth in a given size of head than could be got into the face, only one-half of the teeth are dovetailed into the periphery of the head and the other half into its face, but yet all the teeth are effective for face cutting, the construction being as follows :—

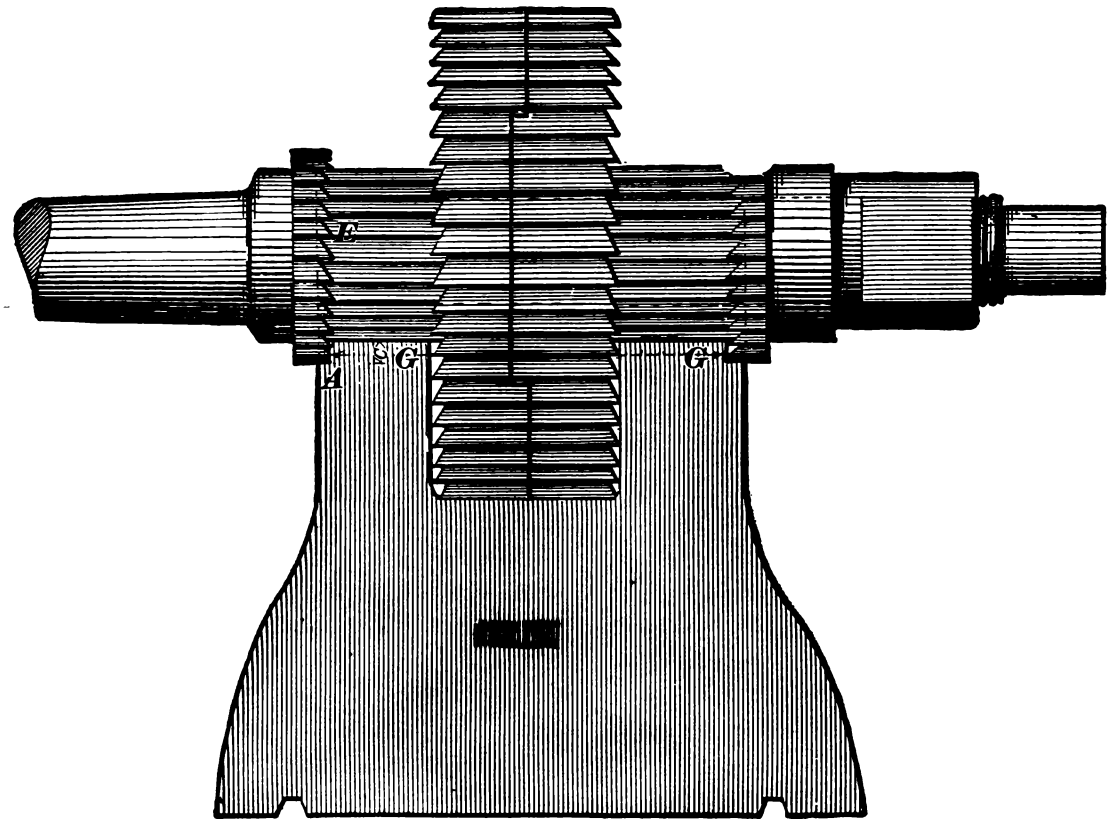

Fig. 1952.

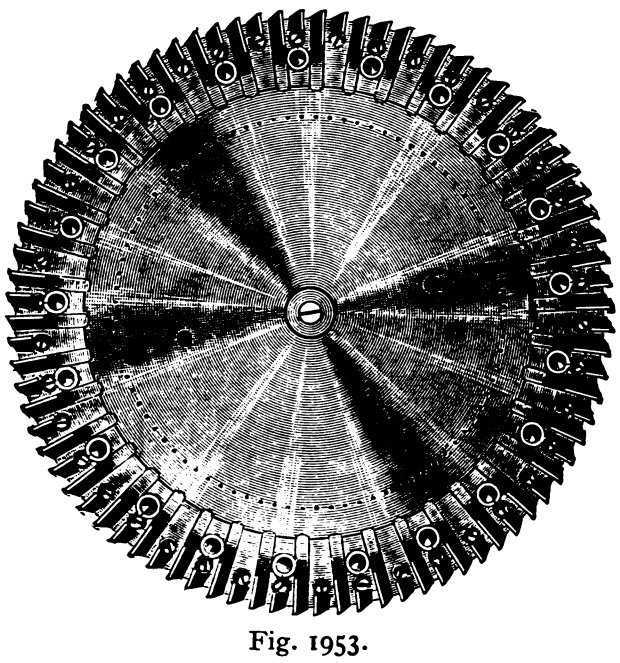
Fig. 1953.

Between each pair of face teeth is a slit sleeve, which meets them and has a taper base, through which passes a taper bolt having a nut on the back face of the head. Tightening this nut expands the sleeve, thus locking the pair of teeth in their dovetail grooves. The circumferential teeth are each counter-based to receive a screw tapped in the head, and are firmly locked thereby. This affords a simple and reliable means of inserting and adjusting other teeth with the certainty that they will be true with those already in use.

The large size of some of these heads makes it convenient and desirable to grind them in their places on the machine, and for this purpose a special grinder is made by the same company. This grinder sets upon the machine table and has a point or pin for the index holes or the cutter head; by this means the grinding may be made as accurate as in small milling cutters.

The head shown in figure represents one that has been in use ten years, its cutters having been renewed but once; it is 28 inches in diameter, contains 84 teeth, and weighs 400 lbs.

Arbors for milling cutters may be driven in two ways. In the first the shank is made taper to fit the taper bore of the live spindle. The standard taper is ½ inch per foot of length. The keyway is semicircular, as shown at G in Fig. 1954, the key consisting of a piece of No. 25 Stubbs steel wire, which being of uniform diameter enables a number of keys of different lengths to be easily obtained or made, and the nut is usually cylindrical, having two flat sides, A.

Fig. 1955 (from *The American Machinist*) represents an arbor, having a cone at A, so that the cutter bore being coned to correspond, the cutter will run true, notwithstanding that it may not fit the stem B. It is obvious, however, that the nut and washer must be made quite true or the cutter will be thrown out of line with the

arbor axis and therefore out of true, and also that such an arbor is not suitable for cutters of a less width of face than the length of the cone A.

Shank cutters that have parallel shanks as in Fig. 1928 should have their sockets eased away on the upper half of the bore as

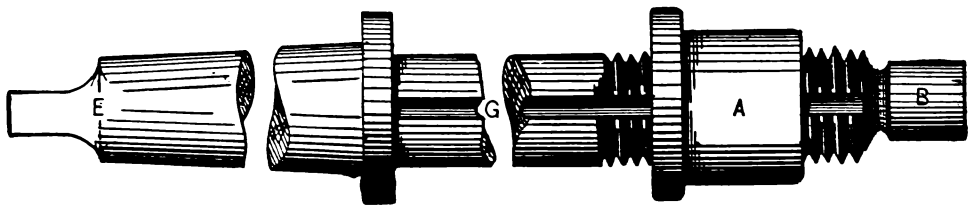

Fig. 1954.

denoted by the dotted arc D in Fig. 1956, which will enable the cutter shanks to be made the full size of the socket bore proper, and thus run true while enabling their easy insertion and extraction from the socket. Or the same thing may be accomplished by leaving the socket bore a true circle fitting the cutter shanks

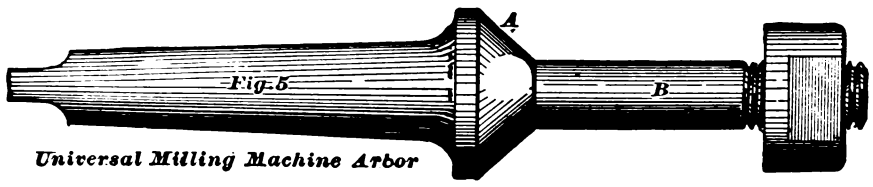

Fig. 1955.

in tight, and then easing away that half of the circumference that is above the centre line C in the figure. It is preferable, however, to ease away the bore of the socket, which entails less work than easing away the shanks of all the cutters that fit to the one socket. When the cutter is held in a socket of this kind it allows

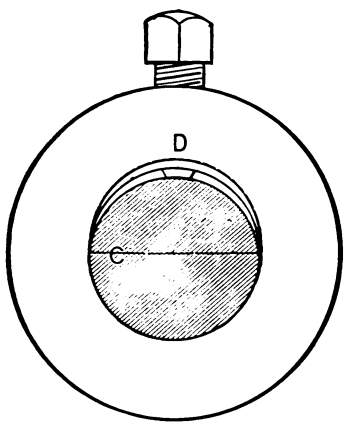

Fig. 1956.

it to be set further in or out, to suit the convenience of the work in hand, which cannot be done when the cutter has a taper shank fitting into the coned bore of the machine spindles.

It is obvious that when the cutter requires to pass within the work, or cut its way, as in the case of milling out grooves, a nut

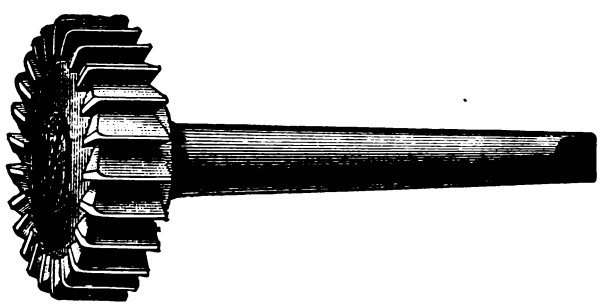

Fig. 1957.

cannot be used; hence, inch cutters are driven by a key as usual, but secured by a screw, as in Fig. 1957, which is from the pen of John J. Grant, in *The American Machinist.*

In many cases it becomes a question whether it is better to do a piece of work with plain mills, with an end mill, or with face mills, a common hexagon nut forming an example. Thus, in Fig. 1958, we have a nut being operated upon by a plain mill; in Fig. 1959 by an end mill, and in Fig. 1960 by a pair of twin face mills.

In the case of the plain mill, it is obvious that only one side of the nut is operated upon at a time, and as the whole of the pressure of the cut falls on one side of the work it acts to spring or bend the mandrel or arbor used to hold the nut, and this spring is sufficient, if several nuts are milled at once on the same arbor, to make the arbor bend and cause the nuts in the middle to be thicker than those at the ends of the arbor. In the case of hand-forged nuts in which there may be more metal to take off some nuts or some sides of nuts than off others, the extra spring due to an increased depth of cut will make a sensible difference to the

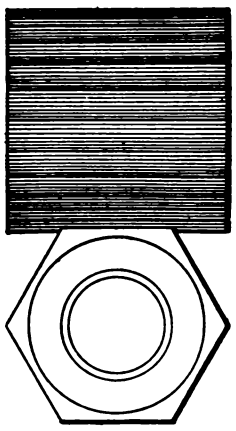

Fig. 1958.

size the work is milled to. In the case of the end mill the pressure of the cut falls in line with the arbor axis and downwards; hence the arbor spring is less and does not affect the depth of the cut.

In the case of the face mills the pressure of the cut falls on

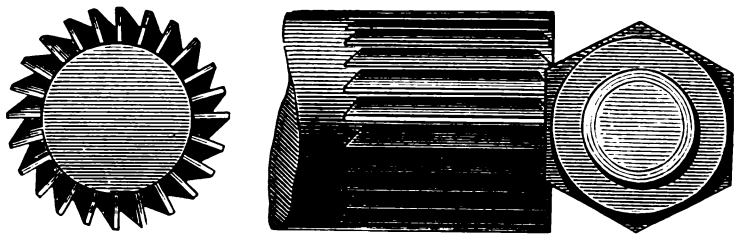

Fig. 1959.

both sides of the work, and the spring is mainly endways of the nut arbor; hence, it does not affect the depth of the cut nor the truth of the work. Furthermore, in both the end and the face mills, the work will be true notwithstanding that the cutter may not be quite true, because each point of the work surface is passed over by every tooth in the cutter, so that the work will be true whether the cutter runs true or not; whereas in the plain mill or cutter

each tooth does its individual and independent proportion of finishing. This is shown in Figs. 1961 and 1962. In Fig. 1961 we have the plain mill, and it is obvious that the tooth does the finishing on the vertical line B, that being the lowest point in its revolution. After a tooth has passed that point the work in feeding moves forward a certain distance before the next tooth comes into action; hence to whatever amount a tooth is too high it leaves its mark on the work in the form of a depression, or *vice versâ*, a low tooth will leave a projection.

In Fig. 1962 we have a piece of work being operated on by a face mill, and it is obvious that while the teeth perform cutting

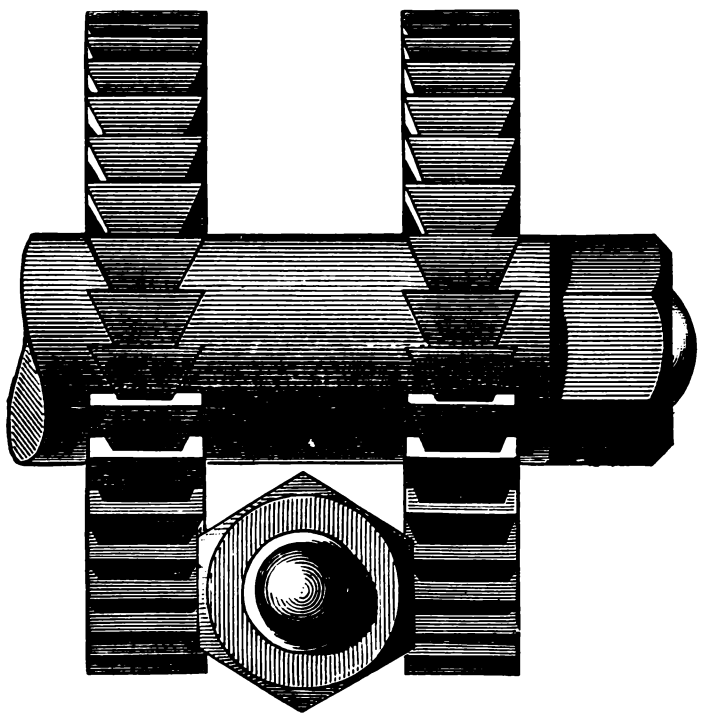

Fig. 1960.

duty throughout the distance A, yet after the work has fed past the line A it is met by the cutter teeth during the whole time that the work is feeding a distance equal to A on the other side; hence the prolonged action of the teeth insures truth in the work. On the other hand, however, it is clear that the work requires to feed this extra distance before it is finished.

Suppose, however, that the cutter being dead true the cutting action ceases on the centre line, and therefore exists through the distance A only, and if we take a plain cutter of the same diameter as in Fig. 1963 we see that its period of feed only extends

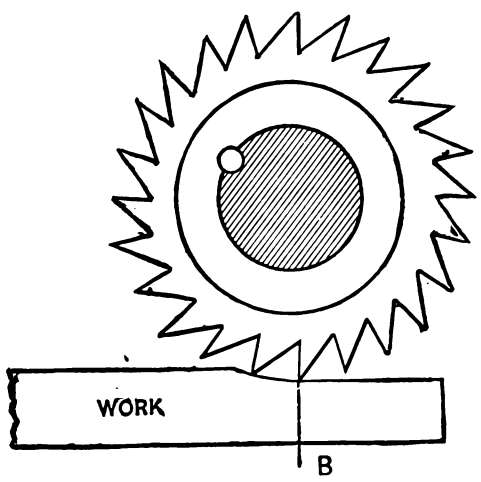

Fig. 1961.

through the length B, and it becomes apparent that to perform an equal amount of work the face cutter is longer under feed, and therefore does less work in a given time than the plain cutter, the difference equalling twice that between A and B in the two figures, because it occurs at the beginning and at the end of the cut.

There is, however, another question to be considered, inasmuch as that the face cutter must necessarily be of larger diameter than the plain one, because the work must necessarily pass beneath the washer (C, Fig. 1915), that is between the two cutters; hence the cutter is more expensive to make.

We may in very short work overcome this objection by feeding the work, as at K in Fig. 1964, the face L to be milled requiring to feed the length of the teeth instead of the distance H in the figure. In the end mill the amount of feed also is greater for a given length of finished surface than it is in the plain cutter, as

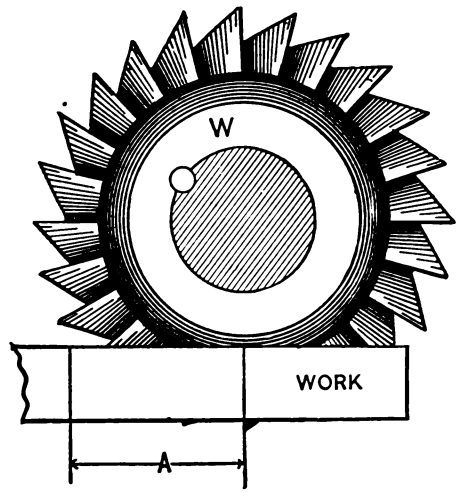

Fig. 1962.

will be readily understood from what has already been said with reference to face mills.

Face milling possesses the following points of advantage and disadvantage, in addition to those already enumerated: If the work is sprung by the pressure of the holding devices it is in

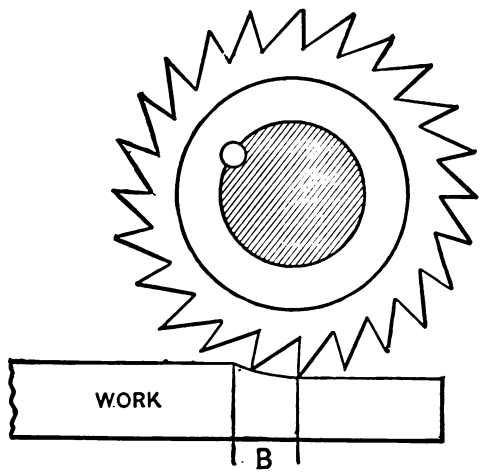

Fig. 1963.

a line with the plane of motion of the teeth, hence the truth of the work is not impaired. On the other hand, the teeth meet the scale or skin of the work at each cut, whereas in a cylindrical cutter this only occurs when the cutter first meets the work surface.

The strain of the cut has more tendency to lift the work table than in the case of a cylindrical cutter. The work must be held

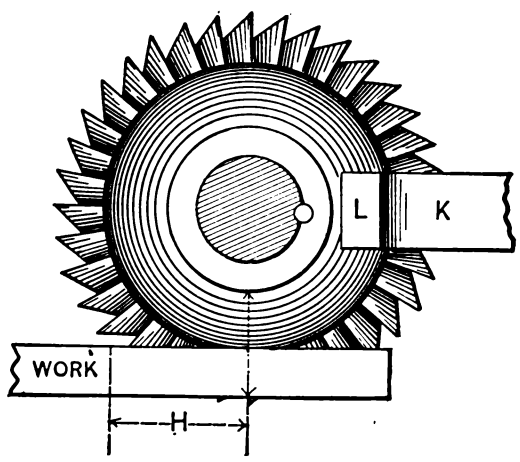

Fig. 1964.

by end pressure; hence the chuck or holding jaws must be narrower than the work, rendering necessary more work-holding devices. Since, however, both sides of the work are simultaneously operated on, there is no liability of error in parallelism from errors in the second chucking, as is the case with plain cutters.

To cut V-shaped grooves in cylindrical work, when it is required that one face or side of the groove shall be a radial line from the centre of the work, two methods may be employed. First we may form the cutter, as in Fig. 1965, the side B of the cutter being straight and the point of the cutter being set over the centre of the work. The objection to this is that the finished groove will have a projection or burr on the radial side of the groove, as shown at D in the figure, entailing the extra labor of filing or grinding,

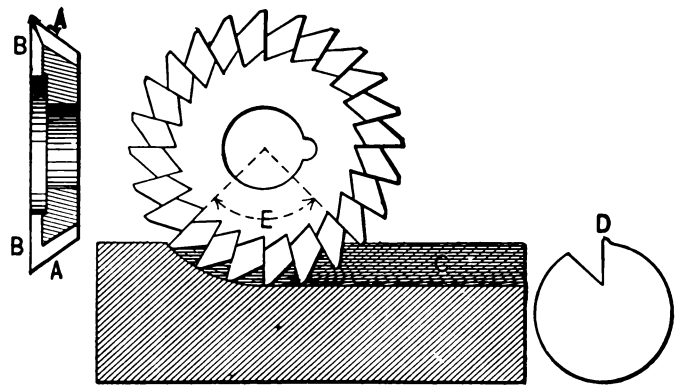

Fig. 1965.

to remove it; furthermore, that face will have fine scored marks upon it, as denoted by the arcs at C, these scores showing very plainly if the cutter has any high teeth upon it, and more especially in the case of cutting spirals, as will appear presently. The reason of this is that the side B of the cutter being straight or flat the whole of the teeth that are within the groove have contact with the side C of the groove, that is to say, all the teeth included in the angle E in the figure, because the teeth on the side A tend,

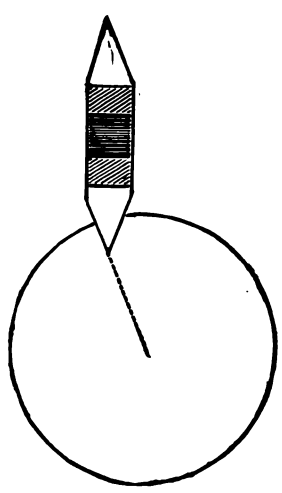

Fig. 1966.

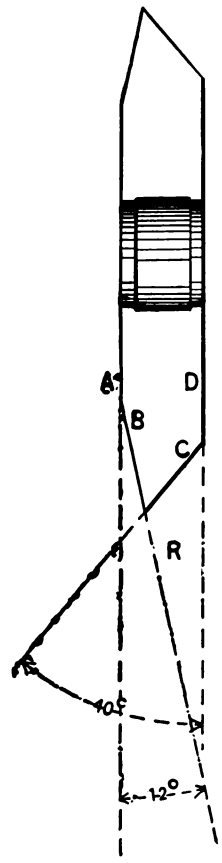

Fig. 1967.

from the pressure of the cut to force the cutter over towards the side C of the groove. The second method referred to, which is that commonly adopted for cutting the flutes of tapes, reamers, milling cutters, &c., is to form the cutter on the general principle illustrated in Fig. 1966, and set it to one side of the centre of the work so that one of its faces forms a radial line, as shown in the figure, the distance to which it is set to one side depending upon the angle of its cutting edge to the face of the cutter.

Fig. 1967 represents a common form of cutter of this class that is used for cutting spiral grooves on milling cutters up to 3 inches in diameter, which contain eight teeth per inch of diameter. The angle of the teeth on B is 12° to the side face A of the cutter, and the angle of the teeth at C is 40° to the face D.

The effect produced by making face B at an angle instead of leaving it straight, or in other words, instead of cutting the teeth on the face A, may be shown as follows :—

Suppose that in Fig. 1968 we have a sectional view taken through the middle of the thickness of a cutter for a rectangular groove, the circumferential surface being at a right angle to the side faces, and it is evident that the teeth, at every point in their length across the cutter, except at the extreme corner that meets

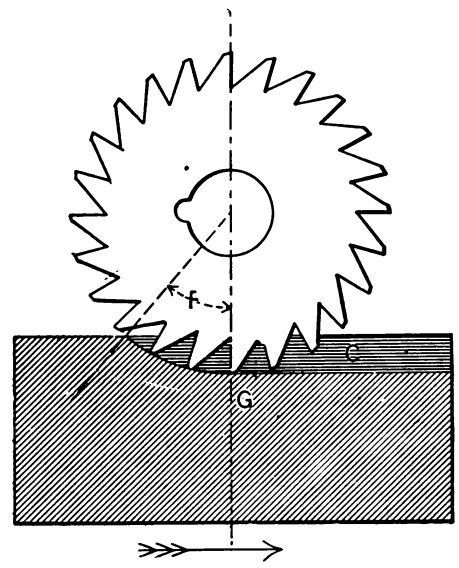

Fig. 1968.

the side faces as C, will have contact with the seat of the groove while passing through the angle F only (which is only one half of the angle E in Fig. 1965); or in other words, each tooth will have contact with the seat of the groove as soon as it passes the line G, which passes through the axis of the cutter; whereas, when the teeth are parallel with the side of the cutter, as was shown in Fig. 1965, the teeth continue to have contact with the side walls of the groove after passing the line G.

By forming the cutter as in Fig. 1967, therefore, we confine the action to the angle F, Fig. 1968, the teeth having contact with the walls of the groove as soon as they pass the line G.

In cutting spiral grooves this is of increased importance, for the following reasons: In Fig. 1969 we have a cutter shown in section, and lying in a spiral groove. Now suppose a tooth to be in action at the bottom of the groove, and therefore on the line G G,

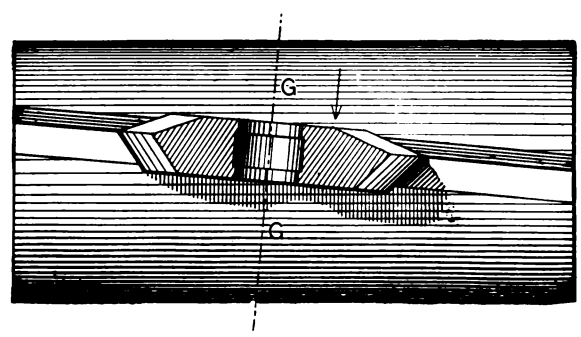

Fig. 1969.

and during the time that it moves from that line until it has moved above the level of the top of the groove, the work will have performed some part of a revolution in the direction of the arrow, and has therefore moved over towards that side of the cutter; hence, if that side of the cutter had teeth lying parallel, as shown at B in Fig. 1965, the walls of the groove would be scored as at C in that figure, whereas by placing the teeth at an angle to the side face, they recede from the walls after passing line G, and therefore produce smoother work.

A cutter of this kind must, for cutting the teeth of cutters, be accurately set to the work, and the depth of cut must be

accurate in order to cut the grooves so that one face shall stand on a radial line, and the top of the teeth shall not be cut to a feather edge. If the teeth were brought up to a sharp edge the width of the groove at the top would be obtained with sufficient accuracy by dividing the circumference of the work by the number of flutes or teeth the work is to contain, but it is usual to enter the cutter sufficiently deep into the work to bring the teeth tops up to not quite a sharp edge. The method of setting the cutter is to mark on the end of the work a central line R, Fig. 1970, and make the

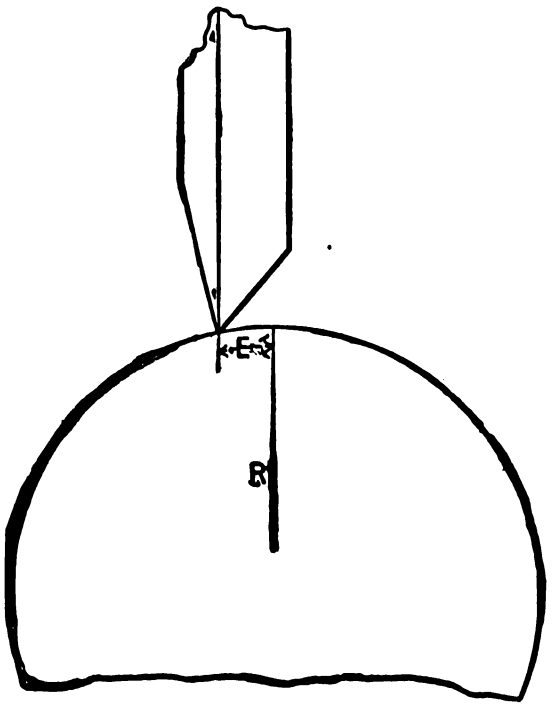

Fig. 1970.

distance E in same figure equal to about one tenth the diameter of the work.

Obviously the cutter is set on opposite sides of the work centre, according to which side of the groove is to have the radial face. Thus for example, in Fig. 1970, the cutter is set to the left of line R, the radial face of the groove being on the left, while in Fig. 1971 the cutter is set on the right of line R, because the radial face is on the right hand side of it, the work consisting (in these examples) in cutting up a right and a left-hand mill or cutter.

The acting cutter J may in both cases be used to cut either a

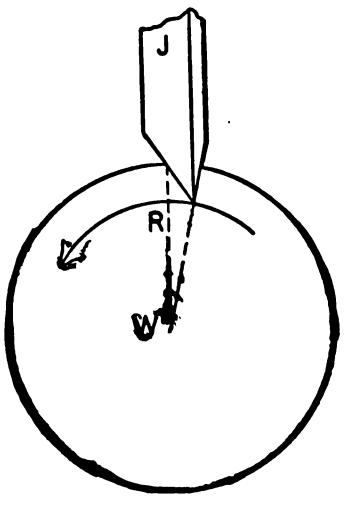

Fig. 1971.

right or a left-hand flute, according to the direction in which the work W is revolved, as it is fed beneath the cutter J.

In Fig. 1972 we have an example of cutting straight grooves or teeth, with an angular cutter having one side straight, and it is seen that we may use the operating or producing cutter in two ways: first, so that the feed is horizontal, as at A, or vertical, as at B; the first produces a right-hand, and the second a left-hand cutter, as is clearly seen in the plan, or top view. The feeds must, however, be as denoted by the respective arrows being carried upwards for B, so that the cutter may run under the cut and avoid cutter breakage.

The number of grooves or flutes producible by an angular cutter depends upon the depth of the groove and the width of land or tooth between the grooves. Thus Fig. 1973 represents a cutter producing in one case four and in the other eight flutes with the same form of cutter, the left being for taps, and the right for reamers.

For cutting the teeth of cutters or mills above 3 inches in

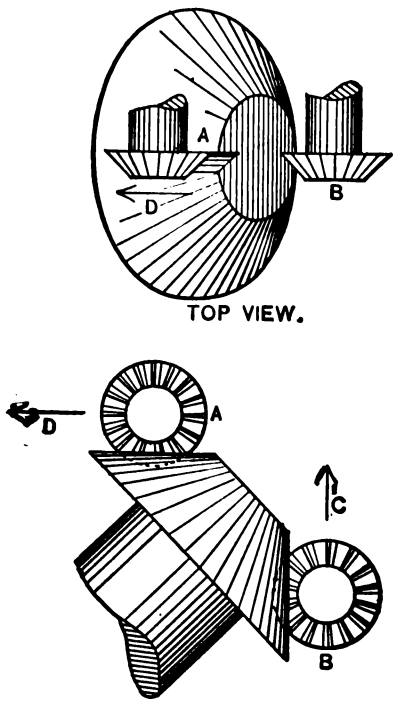

Fig. 1972.

diameter, the angles of the acting or producing cutter are changed from the 12° and 40° shown in Fig. 1967, to 12° as before on one side, and a greater number on the other; thus in the practice of one company it is changed to 12° and 48°, the 12° giving the radial face as before, and the 48° giving a stronger and less deep

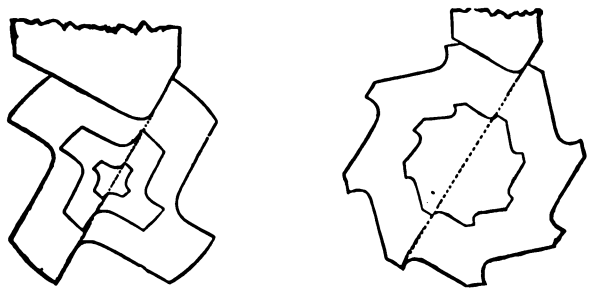

Fig. 1973.

tooth, the deep tooth in the small cutters being necessary to facilitate the grinding of the teeth to sharpen them.

In cutting angular grooves in which the angle is greater on one side than on the other of the groove, the direction of cutter revolution and the end of the work at which the groove is started; or in other words, the direction of the feed, is of importance, and it can be shown that the feed should preferably be so arranged that

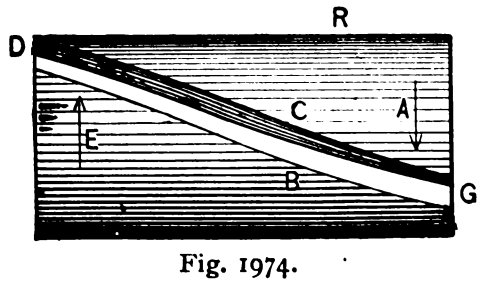

Fig. 1974.

the side of the groove having the least angle to the side of the cutter should be the one to move away from the cutter after passing the lowest point of cutter revolution.

In Fig. 1974, for example, we have at R a cylinder with a right-hand groove in it, whose side C, representing the face of a tooth, is supposed to be a radial line from the cylinder axis, the side B representing the back of a cutter tooth, being at an angle of 40°.

Now if the work revolves in the direction of arrow A, and the cut be started at end G (as it must to cut a right-hand groove with the work revolving as at A), then the side C of the groove will move over towards and upon the side of the cutter for the reasons explained with reference to Fig. 1969, and the teeth on this side being at the least angle to the side of the cutter, do not clear the cut so well, the teeth doing some cutting after passing their lowest point of revolution—or in other words, after passing the line G in Fig. 1968. The effect of this is to cause the cutter to drag, as it is termed, producing a less smooth surface on that side (C) of the groove or tooth.

We may, however, for a right-hand groove revolve cylinder R, as denoted by arrow E, and start the cut at end D. The result of this is that the side C of the groove, as the roller revolves, moves away from the side of the cutter, whose teeth therefore do no cutting after passing their lowest point of revolution (G, Fig. 1968), and the dragging action is therefore avoided, and the cut smoother on this which is the most important side of the tooth, since it is the one possessing the cutting edge. When "dragging" takes

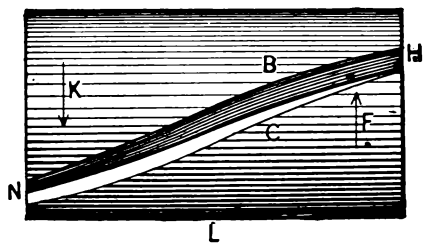

Fig. 1975.

place the burr that was shown in Fig. 1965 at D, is formed, and must, as stated with reference to that figure, be removed either by filing or grinding.

Obviously if the direction of cutter revolution and of feed is arranged to cause side C to move away from the side of the cutter, then side B will move over towards the other side of the cutter; but on account of the cutter teeth on this side being at a greater angle to the side of the cutter, they clear better, as was explained with reference to Fig. 1968, and the dragging effect caused by the revolving of the work is therefore reduced.

We have now to examine the case of a left-hand groove, and in Fig. 1975 we have such a groove in a cylinder L. Let it be supposed that the direction of its revolution is as denoted by arrow

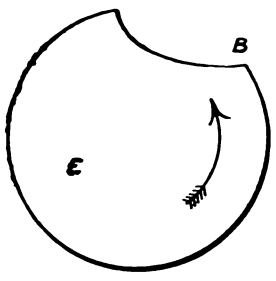

Fig. 1976.

F, and if the cutter is started at H (as it must be to cut a left-hand groove if the work revolves as at F), then the side C moves over towards the cutter, and the dragging or crowding action occurs on that side; whereas if the direction of revolution is as at K, and the cutter starts at N and feeds to H, then side B of the groove moves towards the cutter; hence face C of the groove is cut the smoothest. Obviously then the direction of cutter and work revolution and of feed, in cutting angular grooves in which one angle of the cutter is at a greater degree of angle than the other to the side of the cutter, should be so arranged that the work revolves towards that side of the cutter on which its teeth have the greater angle, whether the spiral be a right-hand or a left-hand one. In cutting grooves not truly circular the same principle should be observed.

In Fig. 1976, for example, it is better if the side B is the one that moves towards the cutter, the direction of revolution being as denoted by the arrow, whether the groove be a right-hand or left-hand (supposing, of course, that the cutter starts from end E of the work).

Obviously, also, the greater the degree of spiral the more important this is, because the work revolves faster in proportion to the rate of feed, and therefore moves over towards the outer faster.

In cutting spirals it is necessary first to put on such change gears as are required to revolve the work at the required speed for the given spiral, and to then set the work at such an angle that

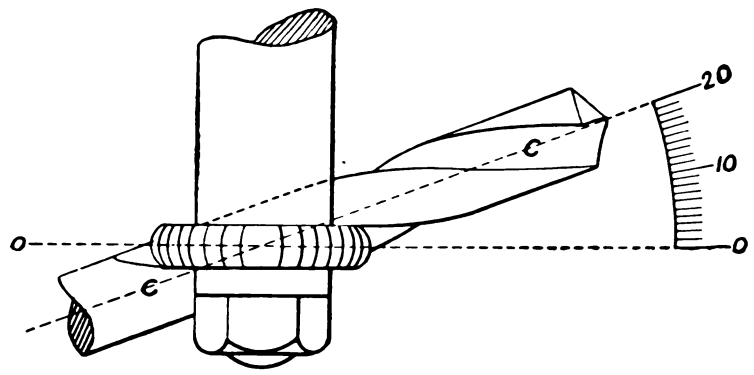

Fig. 1977.

the cutter will be parallel to the groove it cuts, for if this latter is not the case the groove will not be of the same shape as the cutter that produces it.

In Fig. 1977 we have a spiral so set, the centre of the cutter and of the groove being in the line o o, and the work axis (which is also the line in which the work feeds beneath the cutter) being on the line C C. The degrees of angle between the centre of the cutter, or line o o, and the axis of the work, or line C C, are the number of degrees it is necessary to set the work over to bring the cutter and the groove parallel, this number being shown to be 20 in the example.

To find this angle for any given case we have two elements: first, the pitch of the spiral, or in other words, the length or distance in which it makes one complete turn or revolution; and second, the circumference of the work; for in a spiral of a given pitch the angle is greater in proportion as the diameter is increased as may be seen in Fig. 1978, in which the pitch of the spirals is that in Fig. 1977, while the angle is obviously different.

To find the required angle for any given case we may adopt either of two plans, of which the first is to divide the circumference of the work in inches by the number of inches which the spiral takes to make one turn. This gives us the tangent of angle of the spiral.

The second method of setting the work to cut a given spiral is to chuck the work and put on the necessary change gears. The cutter is then set to just touch the work and the machine is started, letting the work traverse beneath the cutter just as though the work was set at the required angle to the cutter.

When the cutter has arrived at the end of the work it will have marked on it a line, as in Fig. 1979, this line representing the

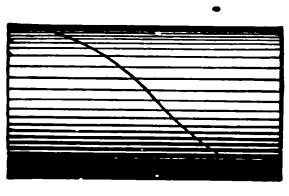

Fig. 1978.

spiral it will cut with those change gears, and all that remains to do is to swing the work over so that this line is parallel with the face of the cutter, as shown in Fig. 1980. If the diameter of the cutter is small we may obviously secure greater accuracy by placing a straight-edge upon the side of the cutter so as to have a greater length to sight by the eye in bringing the line fair with the cutter. This being done it remains to merely set the cutter in its required position with reference to the work diameter.

If an error be made in setting the angle of the work to the cutter the form of groove cut will not correspond to that of the

cutter. This is shown in Fig. 1981, in which the cutter being at an angle to the groove the latter is wider than the cutter thickness, and it is obvious that by this means different shapes of grooves

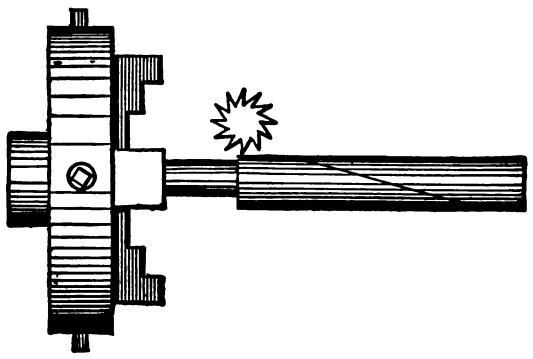

Fig. 1979.

may be produced by the same cutter. In proportion, however, as the cutter is placed out of true the cutting duty falls on the cutting edges on one side only of the cutter, which is the leading side C

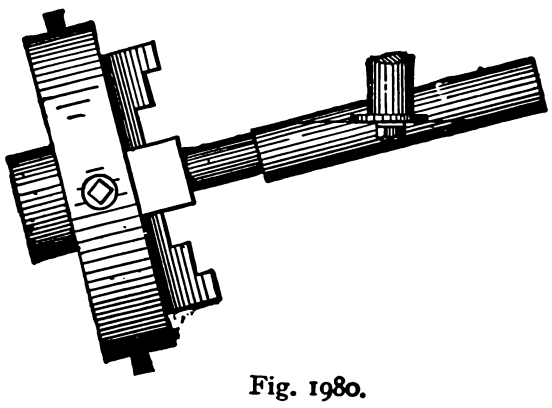

Fig. 1980.

in the figure, while the duty on the other side, B, is correspondingly diminished.

The simplest method of holding work to be operated upon in the milling machine is either between the centres or in the vice that is

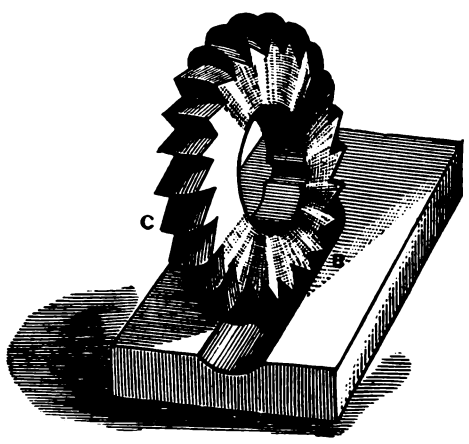

Fig. 1981.

provided with the machine. The principles involved in holding work in the vise so as to keep it true and avoid springing it for milling machine work, are the same as those already described with reference to shaping machine vises.

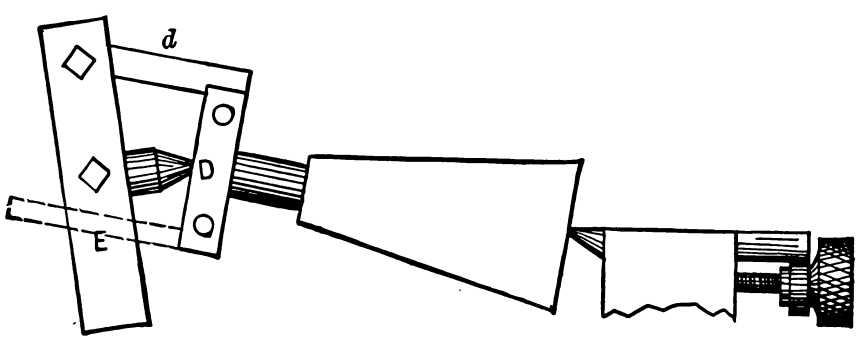

Fig. 1982.

In milling tapers the work, if held in centres, should be so held that its axial line is in line with the axes of both centres, for the following reasons :—

In Figs. 1982 and 1983 we have a piece of work in which the axes of the centres and of the work are not in line, and it is clear that the horn *d* of the dog D will, in passing from the highest to the lowest point in its revolution, move nearer to the axis of the work. Suppose, then, that the driver E is moved a certain portion of a revolution with tail *d* at its highest point, and is

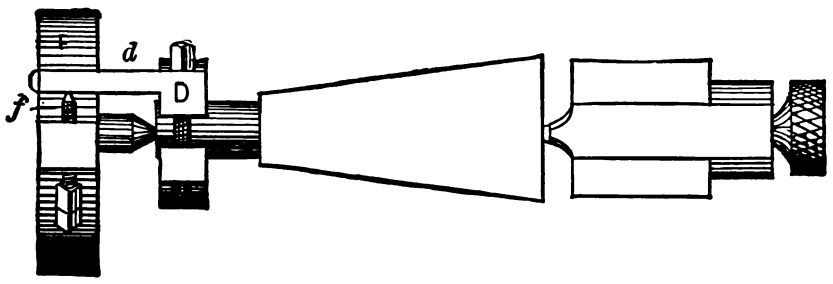

Fig. 1983.

then moved through the same portion of a revolution with *d* at its lowest point in its path of revolution, and being at a greater distance or leverage when at the top than when at the bottom it will revolve the work less. Or if the tail *d* of the dog is taper in thickness, then in moving endways in the driver E (as it does when the work is revolved) it will revolve the work upon the centres.

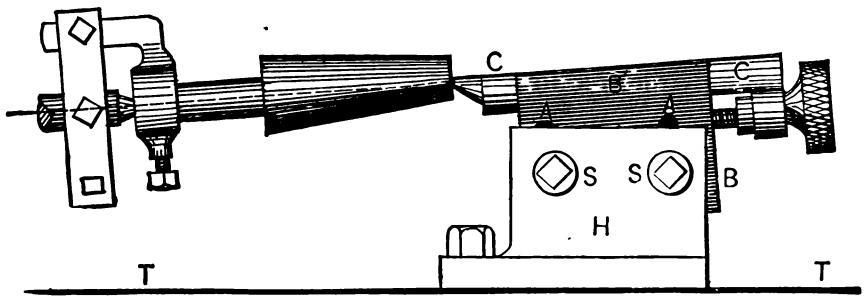

Fig. 1984.

Suppose, then, that the piece of work in the figures required to be milled square in cross-section, and the sides would not be milled to a right angle one to another. This is avoided by the construction of the Brainard back centre, shown in Fig. 1984, in which T represents the surface of the work table and H the

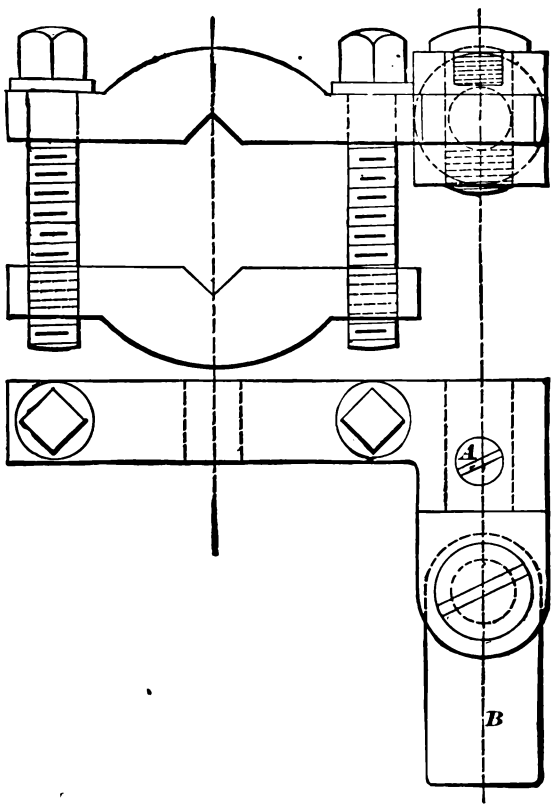

Fig. 1985.

back centre. The block B is fitted within head H, and has two slots A A, through which the bolts S S pass, these bolts securing B in its adjusted position in H. The centre slide C operates in B; hence B, and therefore C, may be set in line with the work axis.

For heads in which the back centre cannot thus be set in line, the form of dog shown in Fig. 1985 (which is from *The American*

Machinist) may be employed to accommodate the movement of the tail or horn through the driver. Its horn or tail B is made parallel so as to lie flat against the face of the slot in the driver. The other end of tail B is pivoted into a stud whose other end is cylindrical, and passes into a hub provided in one jaw of the dog,

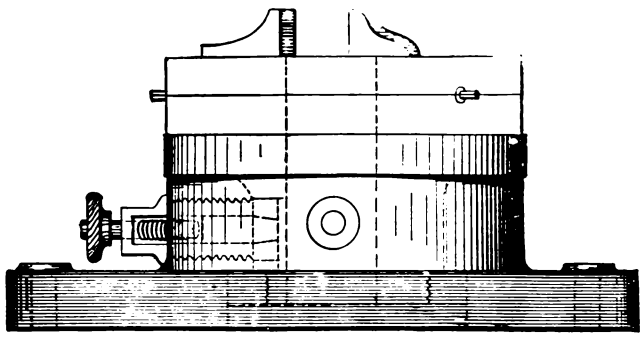

Fig. 1986.

the set-screw A being loosened to permit this sliding motion. This locks the horn in the clamp and permits the dog to adjust itself to accommodate the motion endwise that occurs when it is revolved. The amount of this motion obviously depends upon the degree of taper, it being obvious (referring to Fig. 1982) that horn *d* would pass through the chuck, as denoted by the dotted lines, when at the bottom of its path of revolution.

It is obvious that when the head or universal head of the machine is elevated so that it stands vertical, it may have a chuck screwed on and thus possess the capacity of the swiveled vise.

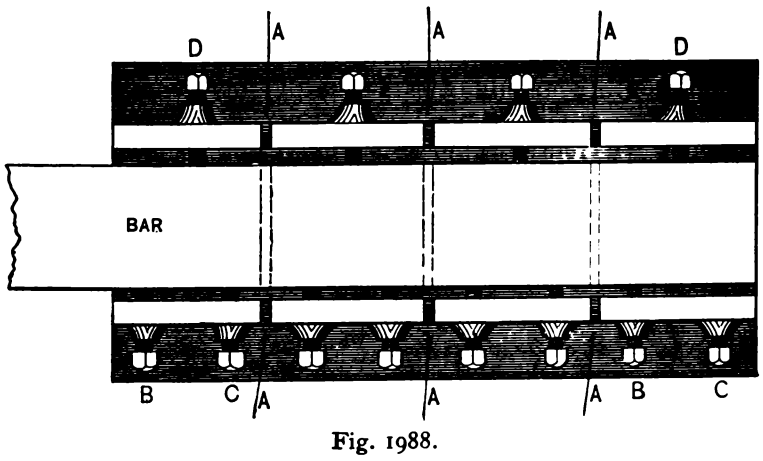

Fig. 1988.

It is preferable, however, to have a separate swiveled chuck, such as in Fig. 1986 (from *The American Machinist*), which will not stand so high up from the machine bed, and will therefore be more solid and suitable for heavy work.

Another very handy form of chuck for general work is the angle chuck shown in Fig. 1987, which is from an article by John J. Grant, in *The American Machinist*. The work-holding plate has T-grooves to chuck the work on and is pivoted at one end, while at the other is a segment and bolt to secure it in its adjusted angle. Two applications of the chuck are shown in the figure.

Fig. 1988 represents a top, and Fig. 1989 an end view of a chuck to hold rectangular bars that are to be cut into pieces by a gang of mills. A, A, A, are grooves through the chuck jaws through which the cutters pass, severing the bar through the dotted lines. Each piece of the bar is held by a single screw on one side and by two screws on the other, which is necessary in order to obtain equal pressure on all the screws and prevent the pieces from moving when cut through, and by moving, gripping the cutters and causing them to break.

In chucking the bar the two end screws D D must be the first to be set up to just meet the bar : next the screws B C on the other side must be set up, holding the bar firmly. The two screws between D D are then set up to just bind the bar, and then the middle four on the other side are screwed up firmly. By this method all the screws will hold firmly and the pieces cannot move.

VERTICAL MILLING, DIE SINKING, OR ROUTING MACHINE.—Fig. 1990 represents Warner & Swazey's die sinking machine. The cutter driving spindle is here driven by belt direct, imparting a smooth motion. The knee is adjustable for height on the vertical slideway on the face of the column, which is provided with a stop adjustable to determine how high the knee and work-holding devices can be raised, and, therefore, the depth to which the cutter can enter the work, and a *former* pin is placed 6 inches behind the cutter to act as a stop against which a pattern may be moved when work is to be copied from a *former* or pattern piece. The work-holding device consists of a compound rest and a vise capable of being swiveled to any angle or of being revolved to

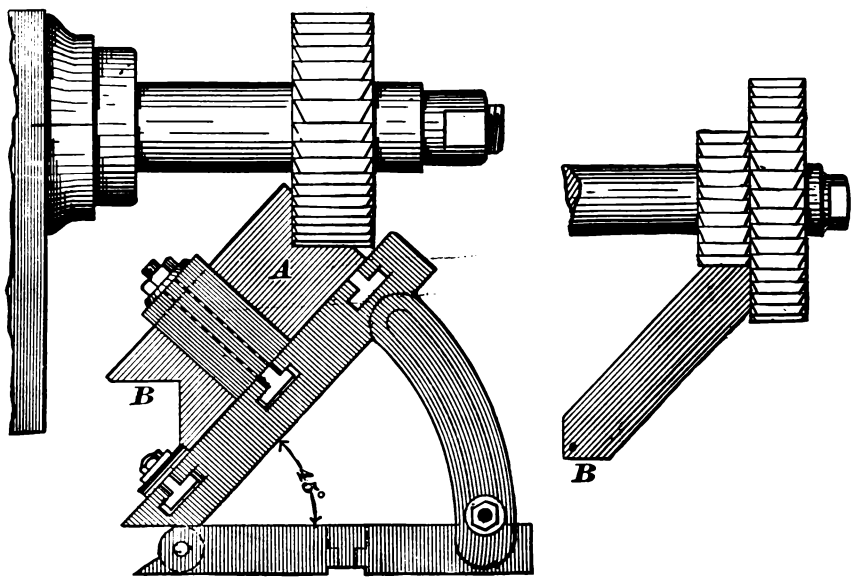

Fig. 1987.

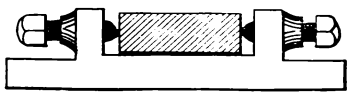

Fig. 1989.

feed the work to the cutter, hence the work may be moved in any required direction, in either a straight line, in a circle, or in any irregular manner to suit the shape of the work.

PROFILING MACHINE.—The profiling machine is employed mainly to cut the edges of work, and to sink recesses or grooves in the upper surface of the same to correspond to a pattern. A provisional template of the form of the work is fastened on the bed of the machine, and from this is cut in the machine a thicker one termed the "former," which is then used to copy the work from.

Fig. 1991 represents Pratt & Whitney's profiling machine. On the cross slide are two separate sliding heads, each of which carries a live spindle for the cutting tool, and beside it a spindle to receive a pin, which by being kept against the pattern or *former* causes the work to be cut to the same shape as the former.

The work is fastened to the table, which is operated upon the raised V s shown by the handle on the left, which operates a pinion geared to a rack on the underneath side of the table. The handle on the right operates the heads along the cross slide also by a rack and pinion motion. The gearing and racks in both cases are double, so that by two independent adjusting screws the wear of the teeth may be taken up and lost motion prevented. By means of these two handles the work may be moved about the cutter with a motion governed by the form or shape of the *former*, of which the work is thus made a perfect pattern both in size and shape. The tool used is a shank or end mill, such as was shown in Fig. 1928. In some profiling machines the spindle carrying the guide or former pin is stationary, in which case the provisional template is put beneath it and the *former* is cut by the live spindle, and for use must be moved from the position in which it was cut and reset beneath the *former* spindle. This machine, however, is provided with Parkhurst's improvement, in which the *former* spindle is provided with a gear-wheel, by which it may be revolved from the live spindle, hence the provisional template may be set beneath the live spindle in which the guide pin is then placed. The cutter is then placed in the *former* spindle, and the *former* cut to shape from the provisional template while in the actual position it will occupy when used.

Fig. 1992 represents Brainard's machine for grinding milling cutters. It consists of a threaded column A to which is fitted the knee B, which as it fits the top of the threads on the column may be swung or revolved about the column without being altered in its height upon the same except by means of the threaded ring C. At D is a lever for clamping the knee B to the column after adjustment; W represents the emery wheel mounted on

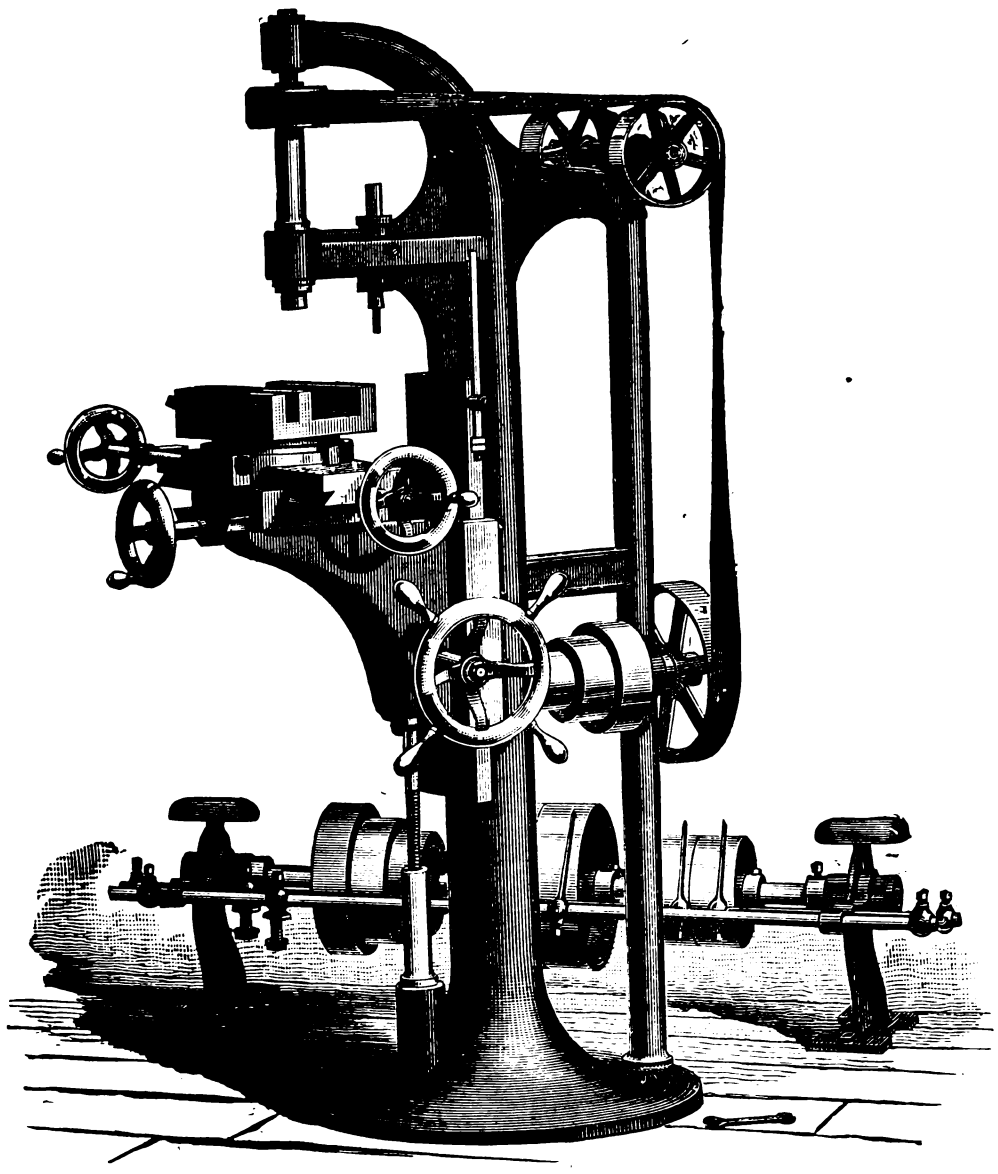

Fig. 1990.

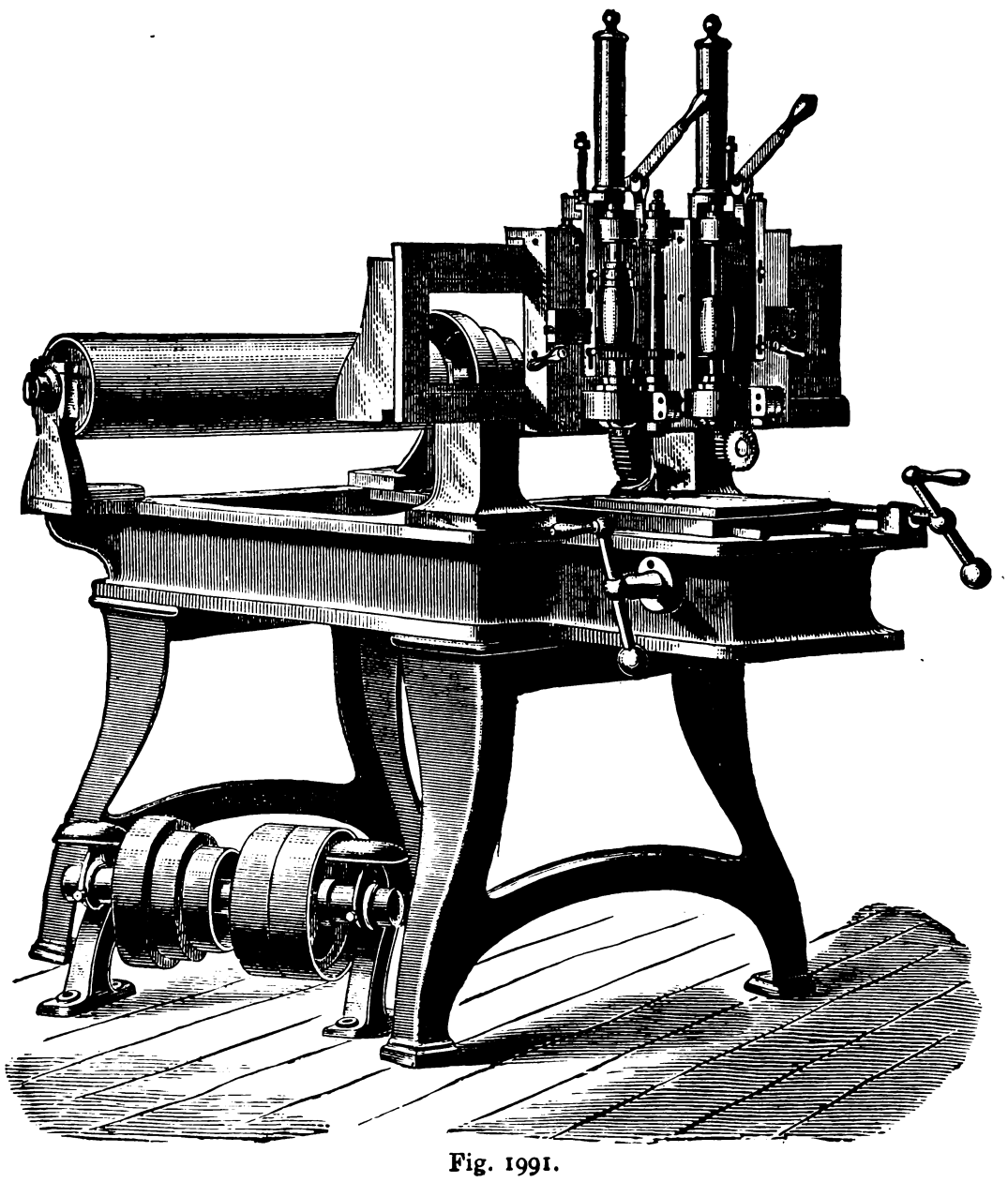

Fig. 1991.

the end of the horizontal spindle having journal bearing at the top of the column. The face of the knee B has a slideway *d* for the fixtures, &c., which hold the cutters to be ground, and at E is a lug pierced to receive an arbor whereon to place cutters to be ground, the lug being split and having a binding screw to lock the arbor firmly in place. F is a slide for receiving the grinding attachments, one of which is shown at K carrying a milling cutter in position to be ground on the face.

Fig. 1993 shows the fixture employed to grind parallel cutters, S representing a stand upon slide F (which corresponds to slide F in the general view of the machine in Fig. 1992) in which is fixed the arbor H. The cutter C is slid by hand along arbor H and beneath the emery wheel, the method of guiding the cutter to the wheel being shown in Fig. 1994, which represents a front view of the machine. At E is the lug (shown also at E in the general view) which has a hole to receive a rod P, and is split through at S, so that operating binding screw L locks rod P in E. At R is a rod secured to the rod P, and G is a gauge capable of swivelling in the end of R and of being secured in its adjusted position. The end of this gauge is adjusted to touch the front face of the tooth to be ground on the cutter C, which must be held close against the end of the gauge in order to grind the cutting edge to a straight line parallel to its axis.

A not uncommon error is to place the gauge G against the tooth in front of that which is being ground, as in Fig. 1995, the gauge being against tooth C while tooth B is the one being ground. In this case the truth of the grinding depends upon the accuracy of the tooth spacing. Suppose, for example, that teeth B and C are too widely spaced,

tooth C being too far ahead, and this error of spacing would cause tooth B to be too near the centre of the emery wheel and its cutting edge to be ground too low.

The object of feeding the cutter by hand along the arbor H is twofold : first, the amount of cut must be very light and the feed very delicate, for if the grinding proceeds too fast the cutting edge will be what is termed burned, that is to say, enough heat will be generated to soften the extreme cutting edge, which may be discovered by holding the front face of the tooth to the light, when a

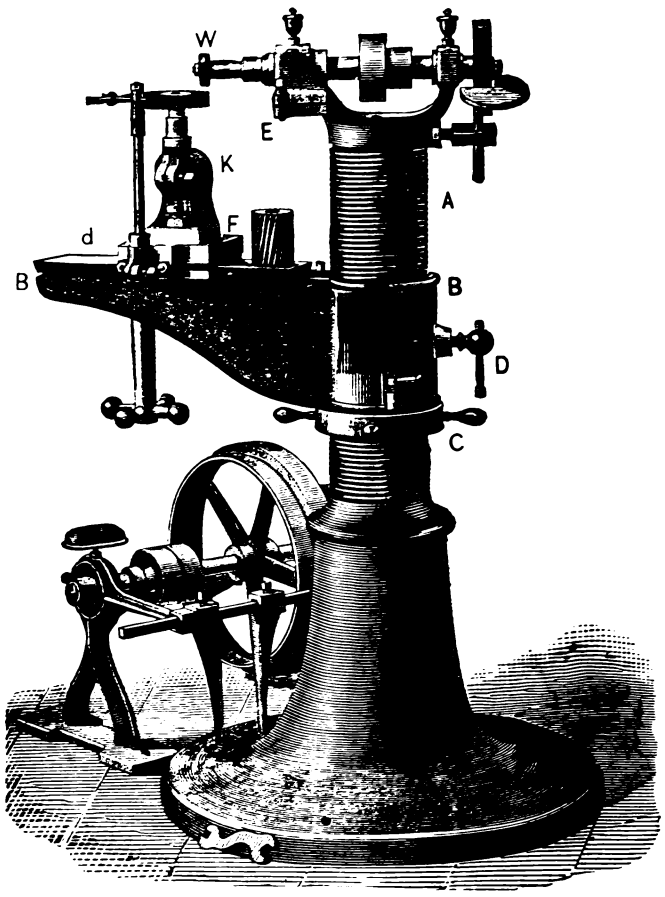

Fig. 1992.

fine blue tint will be found along the cutting edge, showing that it has been softened in the grinding, and this will cause it to dull very rapidly.

The second object is to insure parallelism in the cutter. Suppose, for example, that the cutter C was fast upon arbor H and was fed to the wheel by moving slide F, and if the arbor H stood at an angle, as in Fig. 1996, to the slide upon which F moved, the cutter would be ground taper, whereas if the cutter is fed along the arbor it will be ground parallel whether the arbor is true or

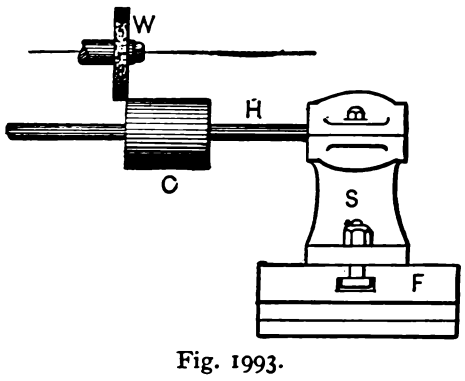

Fig. 1993.

not with the slideway of F, the only essential being that the arbor H be parallel and straight, which is much easier to test and to maintain than it is in the slideway (D, Fig. 1992). Here it may be noted that oil should not be applied either to arbor H or to the cutter bore or slideway D, as lubrication only increases the wear of the parts, causing the fine emery particles that inevitably fall upon them to cut more freely.

As thin cutters would not have sufficient length of bore to steady them upon the arbor and insure parallelism, the cutter sleeve shown in Fig. 1997, which is from *The American Machinist*, is employed to hold them. It is provided with a collar, is threaded at T for the nut N to hold the cutter against collar C, and is bored to fit the cutter arbor H, which corresponds to H in Fig. 1993.

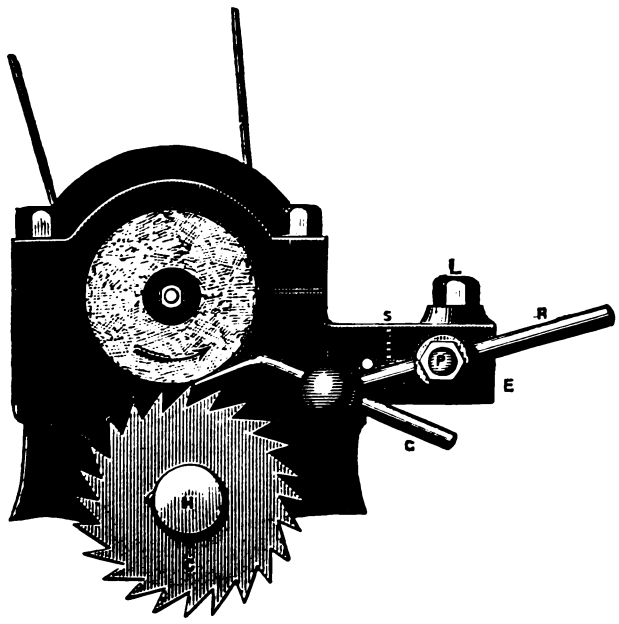

Fig. 1994.

This device also affords an excellent means of holding two or more thin cutters requiring to be ground of exactly equal diameters.

It follows from what has been said that taper tools, such as taper reamers, must be held with their upper face parallel to the line of their motion in being fed to the wheel, as in Fig. 1998, in

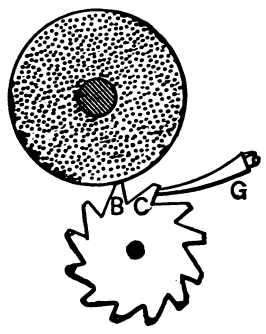

Fig. 1995.

which line M represents this line of motion, line N the axis of the reamer, and line O the line on which the fixture that holds the reamer must move, O being parallel to M.

Fig. 1999 represents Slate's fixture for this class of work. A is a stand that bolts upon the slideway *d* in Fig. 1992. Upon A is fixed a rectangular bar B, upon which (a sliding fit) is the shoe C. Upon

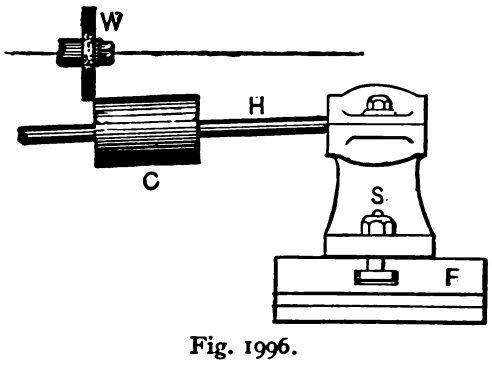

Fig. 1996.

C fits the piece D, which is pivoted to shoe C by the pin at E. At the other end of D is a lug, against which abuts the end of screw G, which is threaded through the end of C, so that by operating the screw G, D may be set to any required angle upon C, and at I is a set-screw threaded through D and abutting against C, so as to

lock D in its adjusted position. At P is a pointer for the graduations on C, which are marked to correspond with the graduations upon the taper turning attachment of a lathe.

The work is held between centres, the head H fitting to a slideway on the top of D, and being secured in its adjusted position by the screw I. The work should obviously be set so that its upper face lies horizontal, and is fed to the wheel by moving shoe C by hand along bar B, the long bearing keeping C steady, and the lightness of the moving parts making the feeding more sensitive than it would be were it required to move bar B.

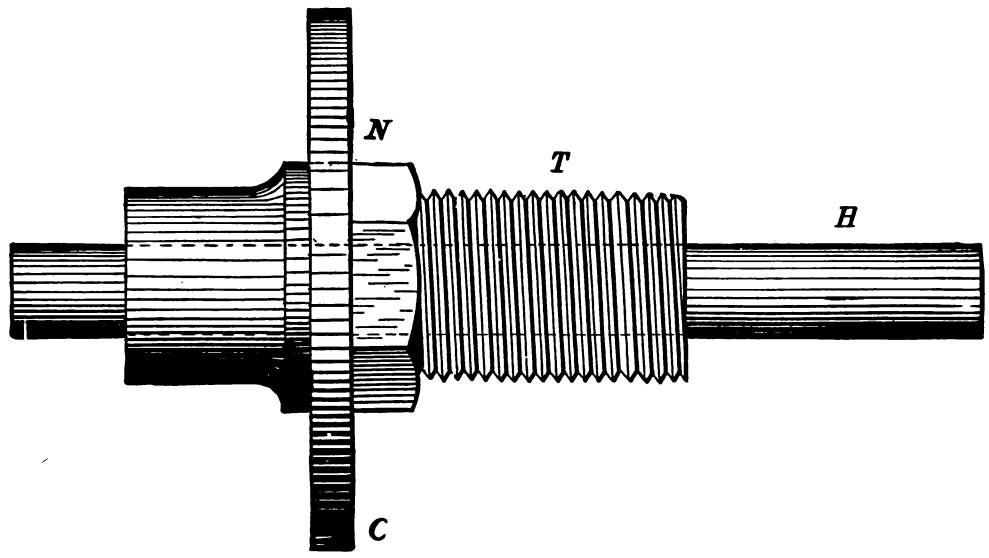

Fig. 1997.

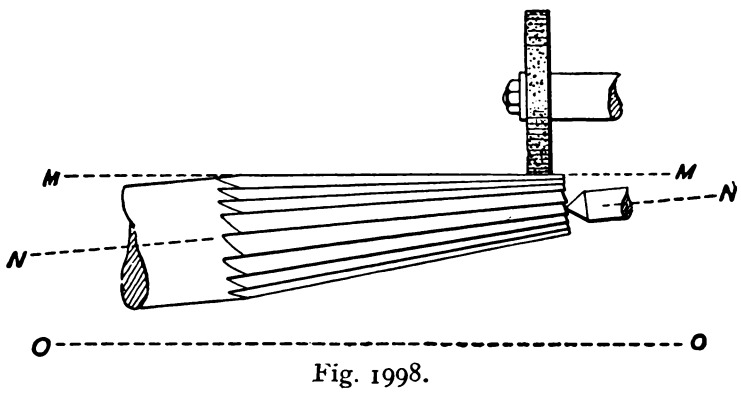

Fig. 1998.

The tooth being ground is held by hand against the gauge G in Fig. 1994, as was described with reference to that figure, and the reamer, therefore, in the case of having spiral grooves, revolves upon its centre while being fed to the emery wheel.

For tapers that are beyond the capacity of this device, and also for holding cutters to have their face teeth ground, the device shown in Fig. 2000 is employed. Upon the slide F is fixed knee K (the corresponding parts to which are seen in the general view, Fig. 1992), whose disk face at R is graduated as shown. Piece S is pivoted by a pin passing through the hub of K and having a nut T to secure it in its adjusted position S is bored to receive the cutter arbor H, and is split through so that by means of the screw at V the arbor may be gripped and locked in S. The stud W for holding the gauge G passes into a bore in the bracket X, and is secured therein by the screw at Y, the lugs through which Y passes being split through into the bore for W. As shown in the figure, the arbor H is set for grinding the side teeth of the cutter, but it is obvious that S being pivoted to K may be swung out of the vertical and to any required angle, so as to bring the face of the tooth that is to be ground horizontally beneath the emery wheel, as shown in Fig. 2001, which represents an angular cutter in position. We have now to consider the adjustment of the cutter to the emery wheel, necessary in order that the cutting edges may be given the necessary clearance.

First, then, suppose in Fig. 2002 that the line A A represents the line of centres of the emery-wheel spindle and the cutter arbor, and if the front face B of the tooth be set coincident with this line, as in the figure, then the top of the tooth partaking of the curvature of the wheel that grinds it would have its heel C the highest; hence the edge at B could not cut.

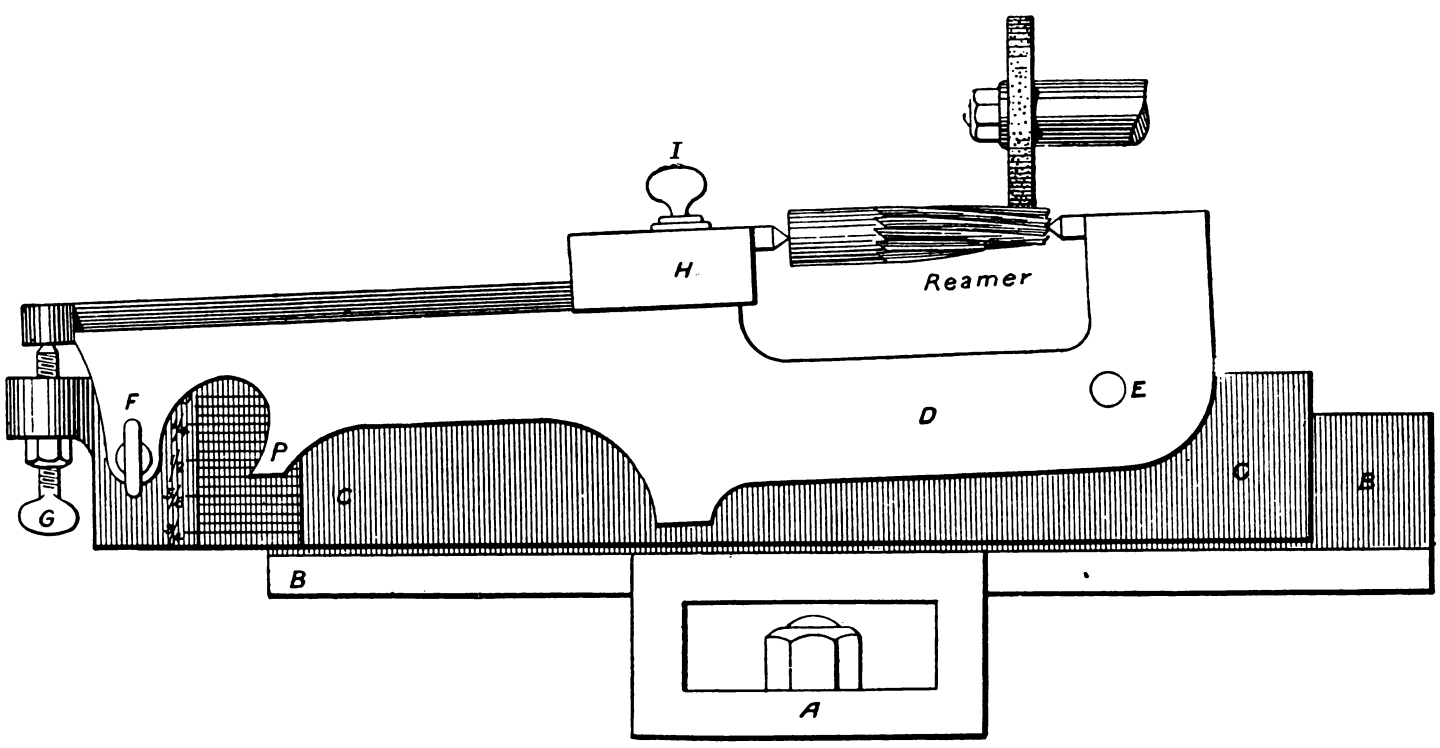

Fig. 1999.

If, however, the line A A in Fig. 2003, still representing the line of centres, we so set the gauge (G, Fig. 1994) that the heel C of

the tooth comes up to line A A, then the curvature of the emery wheel would give clearance to the heel C, and therefore a cutting edge to face B of the tooth.

The amount of clearance that may be given in this way is limited by the spacing of the teeth and the diameter of the emery wheel, as is seen from Fig. 2004, it being obvious that when tooth A is being ground the emery wheel must clear the rear tooth B or that during this motion the heel of the tooth will have approached the axis of the emery wheel and that more clearance will therefore have been given to the cutting edge C.

The actual curve of the top face, as C, Fig. 2007, of the tooth T will remain the same in either case, but its position with relation to the front face will be altered. As this curve is greater in proportion as the diameter of the emery wheel is diminished, and as

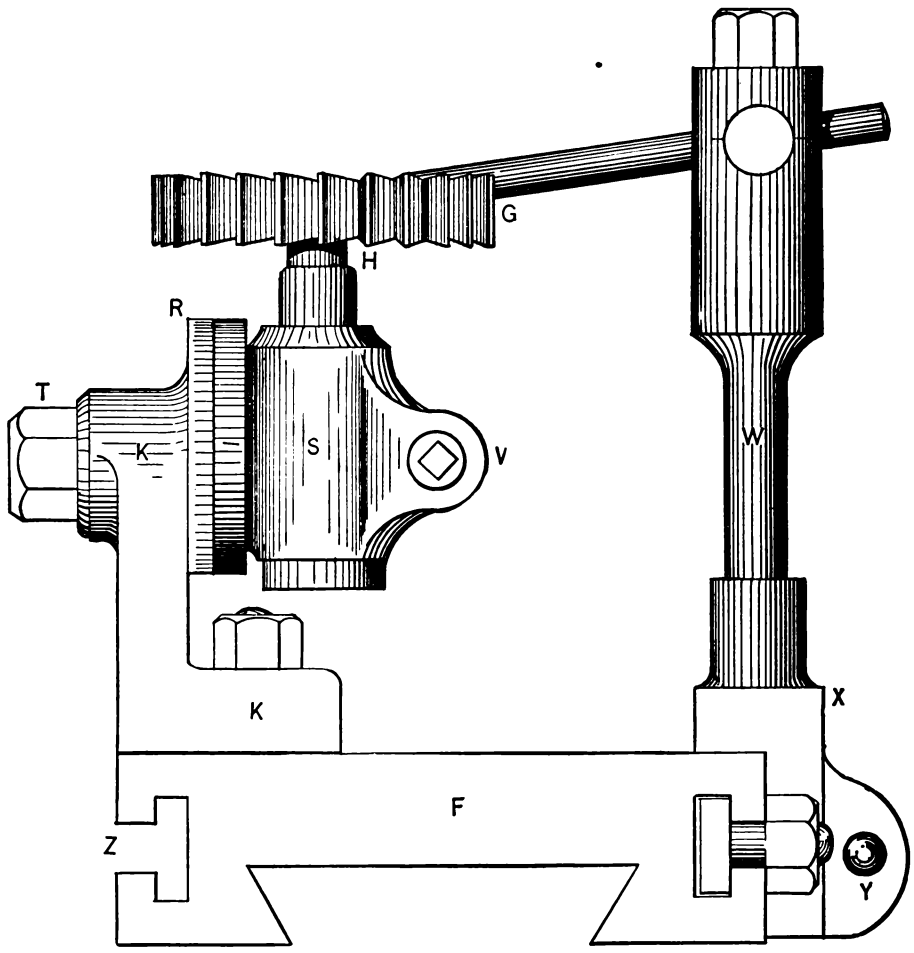

Fig. 2000.

it will grind its edge off, and it is obvious that the smaller the emery-wheel diameter the more the tooth to be ground may be set in advance of the line of centres of the wheel and spindle. It may

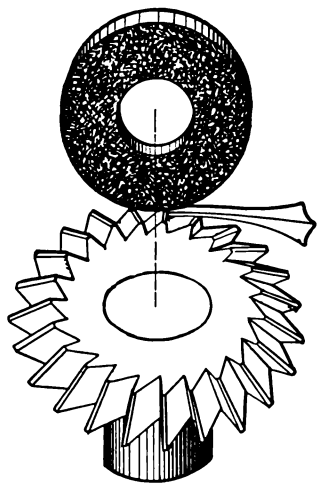

Fig. 2001.

be pointed out, however, that there are two methods of adjusting the cutter to the wheel.

In Fig. 2005, for example, let A A represent the line of centres of the cutter and the wheel, and line B the plane of the front face of the tooth being ground; and in Fig. 2006 let line A represent a vertical line from the axis of the wheel, and B a vertical line passing through the axis of the cutter, the tooth edge C occupying the same position in both figures. Now suppose we employ cutting edge C as a centre and swing the cutter until its axis or centre moves along the arc D to the dot E, and it is evident the curvature weakens the cutting edge of the tooth, it is obviously desirable to employ a wheel of as large a diameter as possible.

To eliminate this curvature it would appear that the position of the emery wheel might be reversed, as in Fig. 2008, but as the emery wheel would wear only where in contact with the tooth, it would

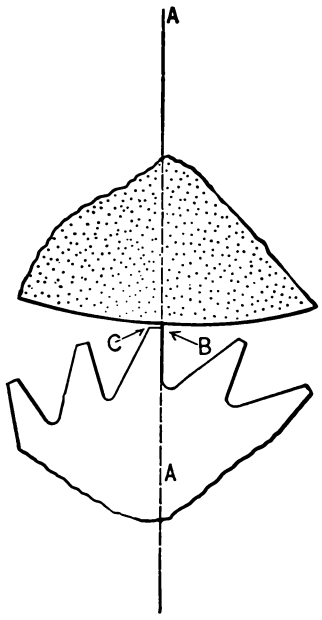

Fig. 2002.

gradually assume the shape in Fig. 2009, there being a shoulder at S that would destroy the cutting edge of the tooth.

This may to a great extent be remedied by presenting the

cutter diagonally to the wheel, as in Fig. 2010, employing a wheel so thin that the whole of its face will cross the tooth top during a revolution. Or if the side faces of the wheel be recessed,

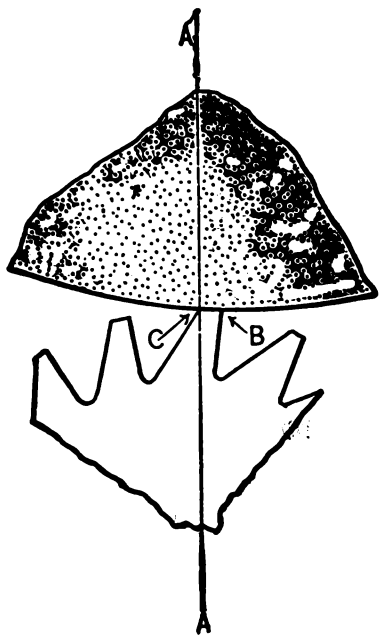

Fig. 2003.

leaving only a narrow annular grinding ring at the circumference, the wheel might be mounted as in Fig. 2011, thus making the top of the tooth quite flat. It may be observed, however, that the

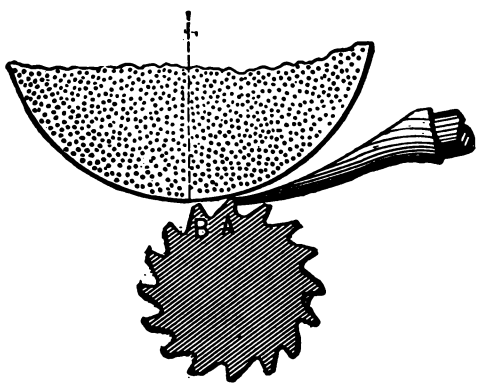

Fig. 2004.

usual plan is to revolve the wheel at a right angle to the work axis, as was shown in Fig. 1994.

In grinding cutters having their teeth a right-hand spiral, care

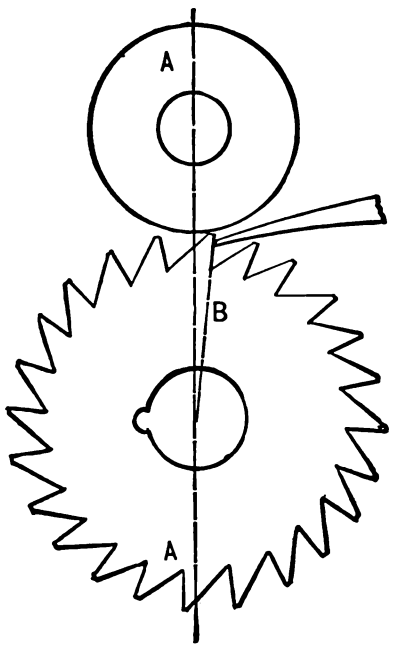

Fig. 2005.

must be taken that in grinding one tooth the emery wheel does not touch the cutting edge of the next tooth.

Thus in Fig. 2013 it is seen that the corner C of the emery wheel is closer than corner D, and being at the back of the wheel and out of sight it is apt to touch at C unless a thin emery wheel be used.

In a left-hand spiral, Fig. 2012, it is the corner D that is apt to

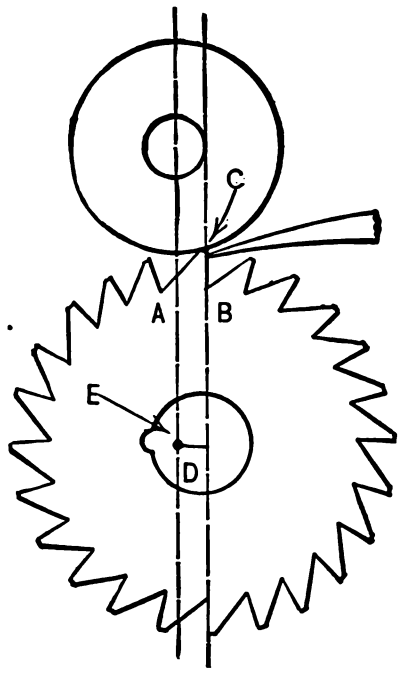

Fig. 2006.

touch the next tooth, the liability obviously being greatest in cutters of large diameter.

The emery wheel should be of a grade of not less than 60 or

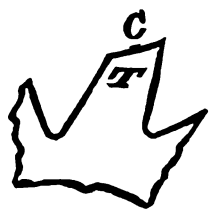

Fig. 2007.

Fig. 2008.

more than 70. If it is too coarse it leaves a rough edge, which may, however, be smoothed with an oilstone slip. If the wheel is too fine it is apt to *burn* the cutter, or in other words, to soften

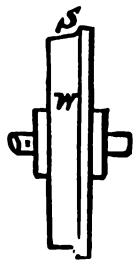

Fig. 2009.

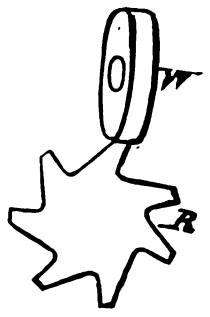

Fig. 2010.

the cutting edge, which may be known by a fine blue burr that may be seen on the front face of the tooth, the metal along this line being softened.

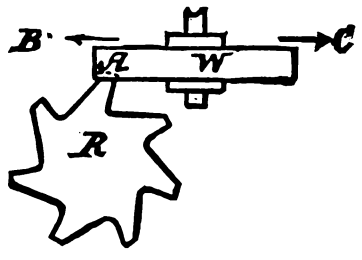

Fig. 2011.

The diameter of the wheel may be larger for small cutters than for large ones, since the teeth of small cutters clear the wheel

better. The larger the wheel the less the curvature on the top of the tooth.

For general work a diameter of $2\frac{1}{2}$ inches will serve well, the

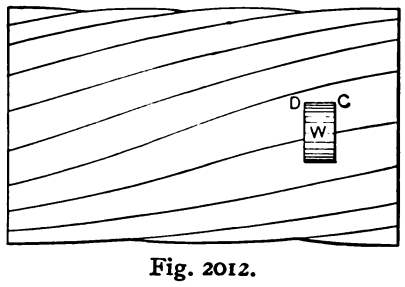

Fig. 2012.

thickness being about $\frac{5}{16}$ inch or $\frac{3}{8}$ inch. The speed of a wheel of this diameter varies in practice from 3,000 to 4,500 revolutions per minute, but either too fast or too slow a speed will cause the wheel to burn the cutter, and the same thing will occur if the cutter is fed too fast to the wheel, or if too deep a cut is taken. The finishing cut should obviously be very small in amount, especially

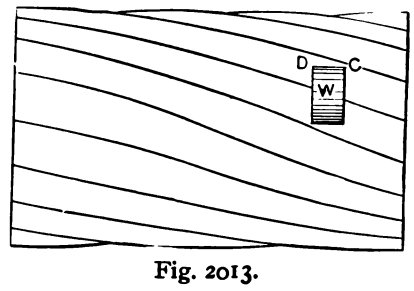

Fig. 2013.

in cutters of large diameter, for otherwise the wear in the diameter of the wheel will sensibly affect the teeth height, those last ground being the highest.

CHAPTER XXIII.—EMERY WHEELS AND GRINDING MACHINERY.

EMERY WHEELS AND GRINDING.—Emery grinding operations may be divided into four classes as follow :—

1st. Tool or cutter grinding, in which the emery wheel is used to sharpen tools which, from their shape, were formerly softened and sharpened by the file, already largely treated in the preceding chapter.

2nd. Cylindrical grinding, in which both the work and the emery wheel are revolved, as has been explained with reference to grinding-lathes.

3rd. Flat surface grinding, in which the emery wheel takes the place of the ordinary steel cutting tool ; and

4th. Surface grinding, in which the object is to remove metal or to smoothen surfaces.

The distinctive feature of the various makes of solid emery wheels lies in the material used to cement the emery together, and much thought and experiment are now directed to the end of discovering some cementing substance which will completely meet all the requisite qualifications. Such a material must bind the emery together with sufficient strength to withstand the centrifugal force due to the high speeds at which these wheels must be run to work economically ; and it must neither soften by heat nor become brittle by cold. It must not be so hard as to project above the surface of the wheel ; or in other words, it should wear away about as fast as does the emery. It must be capable of being mixed uniformly throughout the emery, so that the wheel may be uniform in strength, texture, and density. It must be of a nature that will not spread over the surface of the emery, or combine with the cuttings and form a glaze on the wheel, which will prevent it from cutting. This glazing is, in fact, one of the most serious difficulties to be encountered in the use of emery wheels for grinding purposes, while it is a requisite for polishing uses, as will be explained farther on. Many of the experiments to prevent glazing have been in the direction of discovering a cement which would wear away under about the same amount of duty as is necessary to wear away the cutting angles of the grains of emery, thus allowing the emery to become detached from the wheel, rather than to remain upon it in a glazed condition.

With the same grade of emery the wheel will cut more freely and glaze less in proportion as the cementing material leaves the wheel softer, but the softer the wheel the more rapidly it will wear away ; indeed it is the dislodgement of the emery points as soon as they have become dulled that produces freedom from glazing. It may be remarked, however, that the nature of the material operated upon has a good deal to do with the glazing ; thus wrought iron will glaze a wheel more quickly than hardened steel, and brass more quickly than wrought iron, while on the other hand soft cast iron has less tendency than either of them to glaze. Glazing occurs more readily in all cases upon fine than upon coarse wheels. Glazing is more apt to occur as the work is pressed more firmly to the wheel, and with broad and flat surfaces rather than with cylindrical ones. An excellent material for removing the glaze from an emery wheel is a piece of ordinary pumice stone.

The principal cements used in the manufacture of emery wheels are as follows, each representing the cement for one make of wheel :—

1. Hard rubber. 2. Chemical charcoal (leather cut down by acid and used to prevent shrinkage), and glue. 3. Oxychloride of zinc. 4. Shellac. 5. Linseed oil and litharge. 6. Silicate of soda and chloride of calcium. 7. Celluloid. 8. Oxychloride of magnesium. 9. Infusoria. 10. Ordinary glue.

The vitrified emery wheel is made with a cement which contracts slightly while cooling, leaving small pores or cells through which water, introduced at the centre, is thrown (by centrifugal force) to the surface. This causes, when the wheel is rotating, a constant flow of water from the centre to the surface, carrying off the cuttings and the detached emery.

In order that an emery wheel shall run true with its bore it must fit the driving spindle, and in order that it may do this closely the wheel bore is sometimes filled with lead, the latter being bored out to fit the spindle. If the bore of the emery wheel itself were made a tight fit to the spindle it would abrade the spindle in being put on, and the pressure of the fit if any would tend to split the wheel. A common method of securing emery wheels to their spindles is to fill the bore of the wheel with lead, and bore it out to fit the spindle of the emery grinding machine. The flanges between which the wheel is held are recessed so as to grip the wheel at and near their perimeters only. Between the flange and the wheel a thin disk of sheet-rubber is sometimes used to afford a good bedding for the flange.

The forms of the perimeters of emery wheels are conformed to suit the form of the work to be ground, and it is found that from the great strength of the emery wheel it can be used to a degree of thinness that cannot be approached in any kind of grinding stone. For instance, vulcanite emery wheels 18 inches in diameter and having $\frac{3}{16}$ inch thickness, or face as it is commonly termed, are not unfrequently used at a speed of some 5,000 feet of circumferential feet per minute, whereas it would be altogether impracticable to use a grindstone of such size and shape, because the side pressure would break it, no matter at what speed it were run. Indeed, in the superior strength of the emery wheels of the smaller sizes lies their main advantage, because they can be made to suit narrow curvatures, sweeps, recesses, &c., and run at any requisite speed under 5,000 feet per minute, and with considerable pressure upon either their circumferential or radial faces.

GRADES OF COARSENESS OR FINENESS OF EMERY WHEELS.—Emery is found in the form of rock, and is crushed into the various grades of fineness. The crushing is done either between rollers or by means of stamps, the latter, however, leaves the corners of the grains the sharpest, and hence the best for cutting, though not for polishing purposes. The grades of emery are determined by passing the crushed rock through sieves or wire cloths having from eight to ninety wires to the inch ; thus, emery that will pass through a sieve of sixty wires to the inch is called No. 60 grade.

The finest grade obtained from the manufactory is that which floats in the atmosphere of the stamping room, and is deposited on the beams and shelves, from where it is occasionally collected. Washed emery is used by plate-glass workers, opticians, and others that require a greater degree of fineness than can be obtained by the sieve.

The numbers representing the grades of emery run from 8 to 120, and the degree of smoothness of surface they leave may be compared to that left by files as follows :

8	and	10	represent the cut of a	wood rasp	
16	,,	20	,,	,,	coarse rough file
24	,,	30	,,	,,	ordinary rough file
36	,,	40	,,	,,	bastard ,,
46	,,	60	,,	,,	second cut ,,
70	,,	80	,,	,,	smooth ,,
90	,,	100	,,	,,	superfine ,,
120, F & FF			,,	,,	dead smooth ,,

The F and FF emery is flour emery which has been washed to purify it.

The following are the kinds of wheel suitable for the respective purposes named :—

Kind of work.	Kind of wheel.
For rough grinding, such as on the edges of iron or steel plates, for removing the protuberances on castings or on narrow surfaces where rough grinding is sufficient.	Coarse grain and hard texture.
For narrow surfaces, such as moulding knives, lathe tools, saw gumming, &c.	Medium grain and hard texture.
For free cutting without gumming on broad surfaces on iron, steel, or brass.	Medium grain and soft texture.
For grinding fine tools, such as milling machine cutters, or for work in which the duty is not great while the wheel requires to keep its shape and keep true.	Fine grain and soft texture.
For smooth grinding on soft metals, as cast iron and brass.	Fine grain and hard texture.

When the work is presented to the wheel unguided, the wheel wears out of true, because the work can follow the wheel, hence it becomes necessary to true the wheel occasionally. This can be done by a tool such as in Fig. 2014, which is applied by hand on the hand rest, and corresponds to the tool shown in Fig. 2061 for grindstones, or by the use of a diamond set in a tool to be held by hand or in a slide rest. The diamond produces the most true

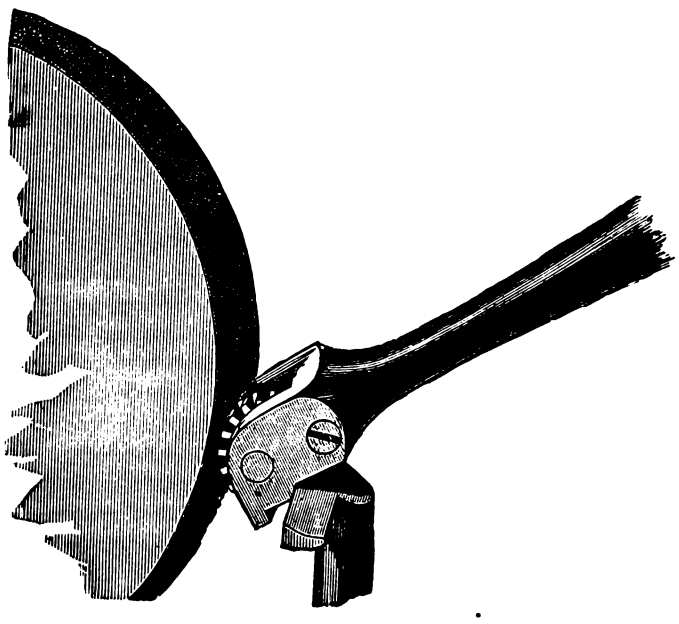

Fig. 2014.

and smooth work, but the cut of the wheel is at first impaired by the action of the diamond, which is not the case with the tool in Fig. 2014.

Corundum is a mineral similar to emery, and corundum wheels are made and used in the same manner as emery wheels. Their cutting qualifications are, however, superior to those of the emery wheel, both cutting more freely and being more durable with less liability to glaze.

SPEEDS FOR EMERY WHEELS.—The speed at which an emery wheel may be run without danger of bursting varies according to the thickness or breadth of face of the wheel, as well as according to the quality of the cementing material and excellence of manufacture. Hence, although a majority of manufacturers recommend a speed of about 5,000 circumferential feet per minute, that speed may be largely exceeded in some cases, while it would be positively dangerous in others. It is, in fact, impracticable in the operations of the workshop to maintain a stated circumferential speed, because that would entail a constant increase of revolutions to compensate for the wear in the diameter of the wheel. Suppose, for example, that a wheel when new is a foot in diameter: a speed of about 1,600 revolutions per minute would equal about 5,000 circumferential feet; whereas, when worn down to 2 inches in diameter, the revolutions would require, to maintain the same circumferential speed, to be about 9,500 per minute, entailing so many changes of pulleys and counter-shafting as to be impracticable. In practice, therefore, a uniform circumferential speed does not exist, the usual plan adopted being to run the large-sized wheels, when new, at about the speed recommended by the manufacturer of the kind of wheel used, and to make such changes in the speed of the wheel during wear as can be accomplished by changing the belt upon a three-stepped cone pulley, and perhaps one, or at most two, changes of pulley upon the counter-shaft. It is sometimes practicable to use wheels of a certain diameter upon machines speeded to suit that diameter, and to transfer them to faster speeded machines as they diminish in diameter. Even by this plan, however, only an approximation to a uniform speed can in most cases be obtained, because as a rule certain machines are adapted to certain work, and the breadth of face and form of the edge of the emery wheel are very often made to suit that particular work. Furthermore, a new wheel is generally purchased of such a size, form, and grade of emery as are demanded by the work it is intended at first to perform. Neither is it, as a rule, practicable to transfer the work with the diametrically reduced wheel to the lighter and faster-speeded grinding machine. So that, while it is desirable to run all emery wheels as fast as their composition will with safety admit, yet there are practical objections to running small wheels at a rate of speed sufficient to make their circumferential velocities equal to those of large wheels. The speeds recommended for the various kinds of wheels now in use vary from about 2,700 to 5,600 circumferential feet per minute; but the speeds obtaining in workshops average between 2,000 and 4,000 feet for wheels 3 inches and less in diameter, and from about 3,000 to 5,600 feet for wheels above 12 inches in diameter. Wheels above 15 inches in diameter, and of ample breadth of face, are not unfrequently run at much greater velocities.

On account of the high velocity at which emery wheels operate, it is necessary that they be very accurately balanced, otherwise the unequal centrifugal motion causes them to vibrate very rapidly, every vibration leaving its mark upon the work.

The method of balancing adopted by one firm is as follows: The arbors are of cast iron, and are cast standing vertical so as to induce equal density in the metal, it having been found that if the arbors were cast horizontally the lower part of the metal would from the weight of the molten metal be more dense than that at the top of the casting. In casting the arbors upright, the difference in the density of metal simply causes one end of the arbor to be more dense than the other, and the difference being at a right angle to the plane of revolution has no tendency to cause vibration. The driving pulleys are cast horizontal to obtain equal density, and after being turned are carefully balanced. The driving pulleys are held to the arbors by being bored a driving fit, and are driven on so as to avoid the use of keys, which would throw the wheels out of balance.

The centrepiece and flange to hold the wheel to the arbor are turned and balanced. The nut to hold the wheel is a round one, which is easier to balance than a hexagon nut. After the centrepiece is put on the arbor, the whole is tried for balance, and corrected if necessary. The pulley is then put on and the whole

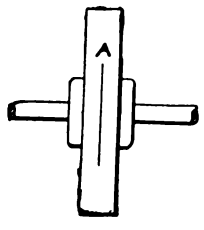

Fig. 2015.

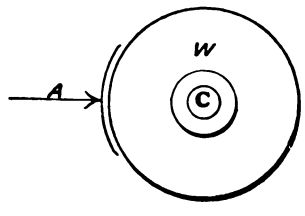

Fig. 2016.

is again balanced, and so on, the arbor being balanced after each piece is added, so that while each piece is balanced of itself the whole is balanced after the addition of each separate piece.

The emery or corundum wheel is then put on the arbor and tried for being in balance. The method of correcting the balance of the wheel is as follows: The arbor with the wheel on is placed in the lathe, the wheel turned true with a diamond tool (the wheel revolving at a comparatively slow speed). The arbor is then revolved at its proper speed (5,000 circumferential feet per minute), and a point applied to just meet the circumference will touch the wheel where it is heaviest, leaving a line as shown in Fig. 2015 at A. The centre of the arbor is then moved over towards this line as shown in Fig. 2016, in which W is the wheel, the location of the line A (marked as above) being as denoted by the arc A,

and C represents the arbor whose centre is moved over towards the arc A. When therefore the arbor is again put in the lathe, it will run out of true by reason of the centre at one end having been altered. A cut is taken down that radial face of the wheel which faces the end of the arbor that has had its centre moved so that the wheel is turned thinner where the mark (A, Fig. 2016) is. The amount of cut to be taken off is a matter of judgment and trial, since it must be just sufficient to compensate for the greater density of the wheel on that side. This greater density, be it noted, occurs from the difficulty in mixing the corundum or other abrasive grains with the cementing material with entire uniformity throughout the mass.

By this method of balancing, the wheel will remain in true balance notwithstanding its wear, because the balancing proceeds equally from the perimeter towards the centre of the wheel.

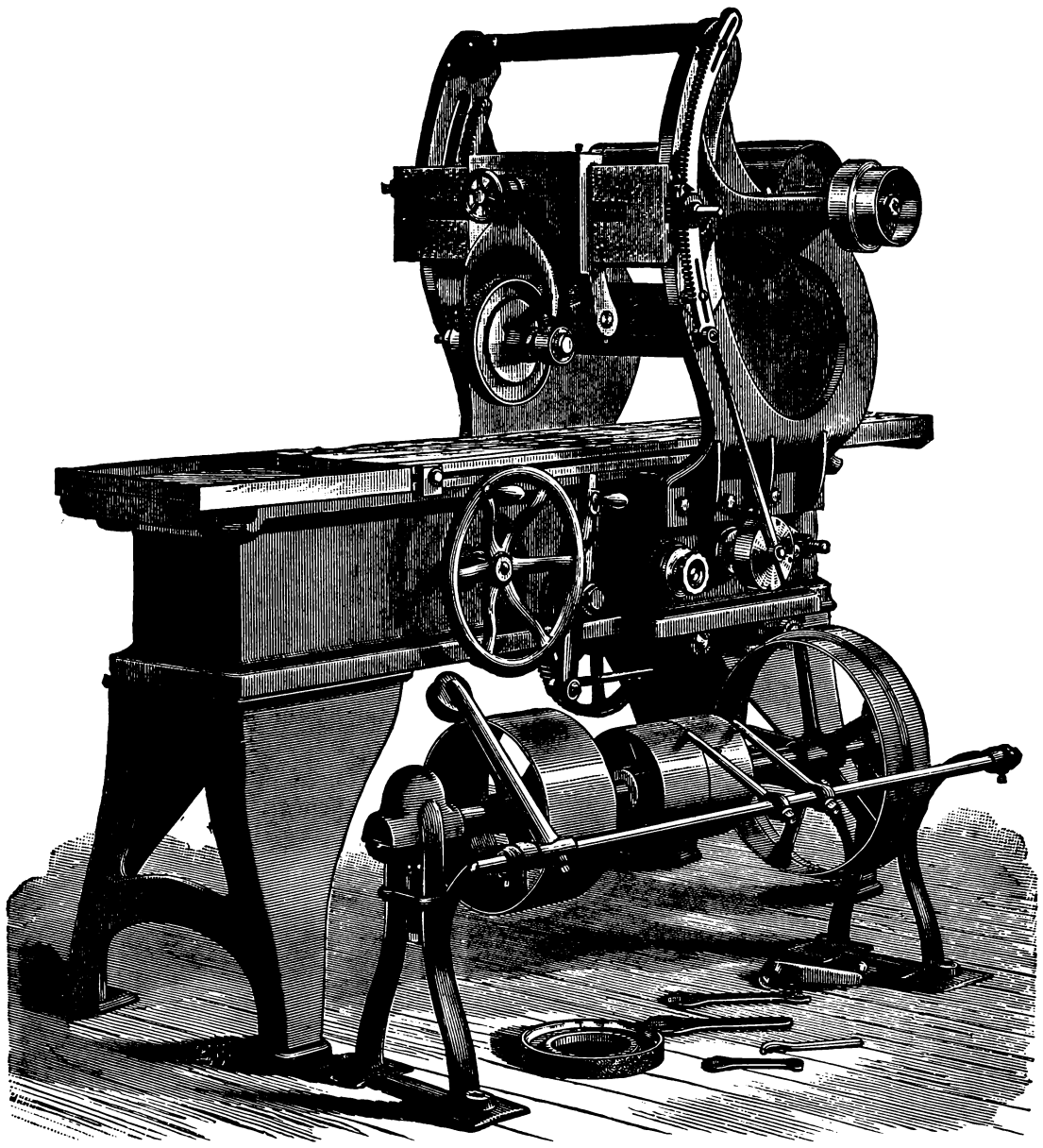

Fig. 2017.

EMERY GRINDING MACHINES. (For grinding-lathes and roll grinding, see article on Lathes.)—Fig. 2017 represents Brown & Sharpe's grinding machine. The bed, the table, and the cross-feed motion of this machine closely resemble those of the planing machine, but its work is far more smoothly and accurately done than can be performed in a planing machine. The table traverses to and fro, accurately guided in ways, and the revolving emery wheel takes the place of the ordinary cutting tool, being carried in a sliding head upon a cross slide or cross bar. The drum for driving the emery wheel is at the back of the machine, as shown in the cut.

The vertical feed motion for adjusting the depth of cut of the emery wheel is capable of very minute adjustment, thus avoiding a difficulty commonly experienced in iron planing machines on account of the coarseness of feed-screw pitch, which coarseness is necessary to insure their durability. The means by which this capability of minute adjustment is effected is shown in Fig. 2018, in which D is the cross head of the machine and C the sliding head having the arm C′, which provides at B a pivot for the wheel-carrying arm A. F is a stud fast in C and carrying E, which forms the nut for the feed screw. Outside this nut is the spiral spring S, whose force steadies the upper end of A.

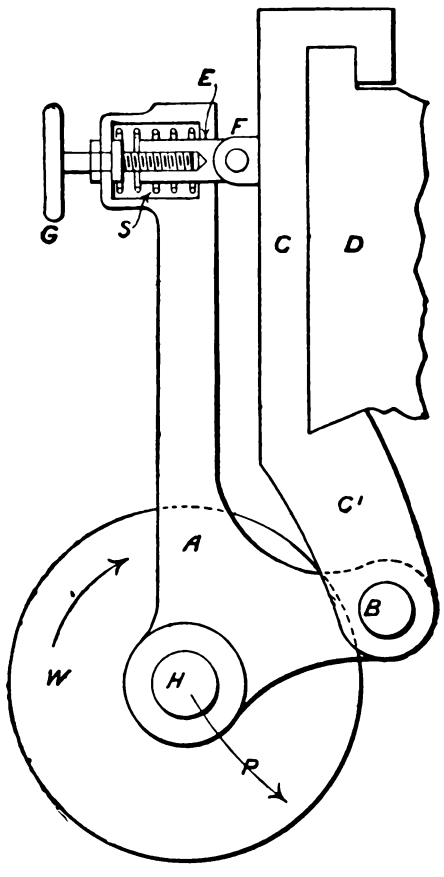

Fig. 2018.

Now suppose the feed wheel G be operated a full rotation, and

the motion of that end of A will be that due to the pitch of the feed screw, but the motion at the centre H of the emery wheel will be the pitch of the screw divided by the difference between

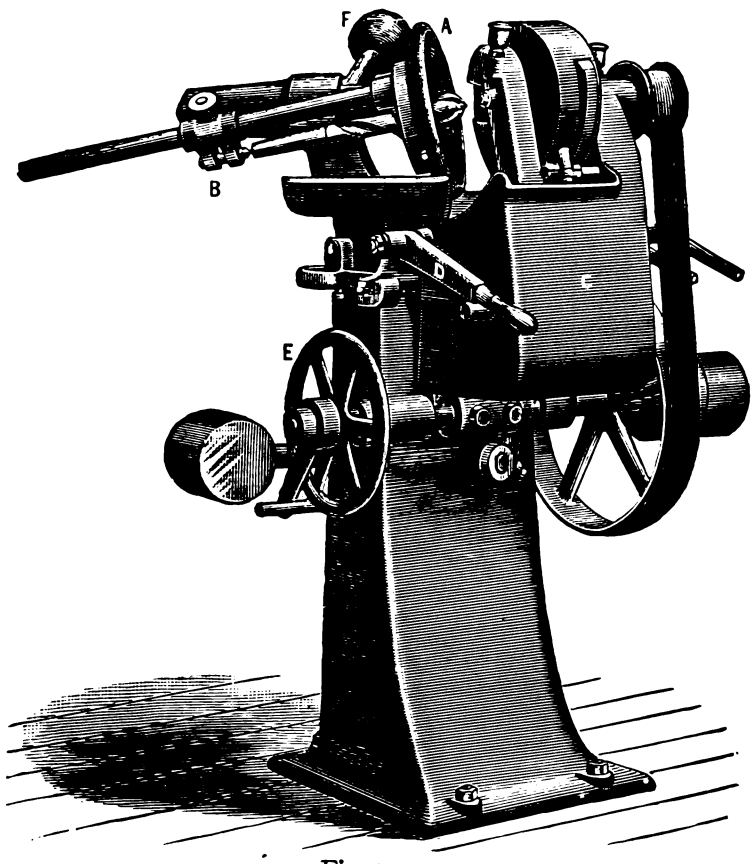

Fig. 2019.

the length from the centre of H to the centre of the feed screw, and that from the centre of H to the centre of B. But even this diminished motion at H is still further reduced, so far as the depth of cut put on is concerned, because the motion of H is not directly vertical, but an arc P, of which B is the centre.

The standards carrying the cross slide are segments of a circle struck from the centre of the driving drum, which is necessary to enable the raising and lowering of the cross slide, and maintain a uniform tension on the belt driving the emery wheel without employing an idler wheel or belt tightener.

Fig. 2019 represents Wm. Sellers & Co.'s drill-grinding machine, in which the drill is held in a chuck operated by the hand wheel A. The jaws of the chuck grip the drill at the outer corners of the cutting edge as shown in Fig. 2020, and so as to grind the point of the drill central to those corners. In order to give to the cutting edges a suitable degree of clearance in their lengths, and to allow for the difference in thickness at their points between large and small drills, the following construction is employed.

Fig. 2020 represents the jaws J J holding on the left a small, and on the right a large drill. The line of motion of the right-hand jaw in opening and closing to grip the drill is along the line *r*, while that of the left-hand is along the line *p p*, the centre upon which the chuck is revolved to grind the drill being denoted by the small circle at S. *x'* represents the centre line of the large drill when held in the chuck, and it is seen that the action of the jaws in closing upon small drills is to lift the drill point closer to the centre S upon which the chuck revolves (the cutting edge being ground to be on the line *y' y'*). The reason for this peculiar and simple but exceedingly ingenious construction is, as before remarked, to maintain the cutting edge in its proper relation to the thickness of the drill point (which thickness varies in different diameters of drills), and to maintain a proper degree of clearance at every point along the length of the cutting edge. In other drill grinding machines the drill when rotated to grind the clearance is moved on the axis A A in Fig. 2022 as a centre of motion, and as this line is parallel to the face of the emery wheel it follows that if the drill were given a full revolution its circumference would be ground to a cylinder as shown in Fig. 2021 by the dotted lines.

In this machine the drill is rocked on the line B, Fig. 2023, as a centre of motion, this line corresponding to the axis of the shaft of lever F in Fig. 2019 upon which the chuck swings, and

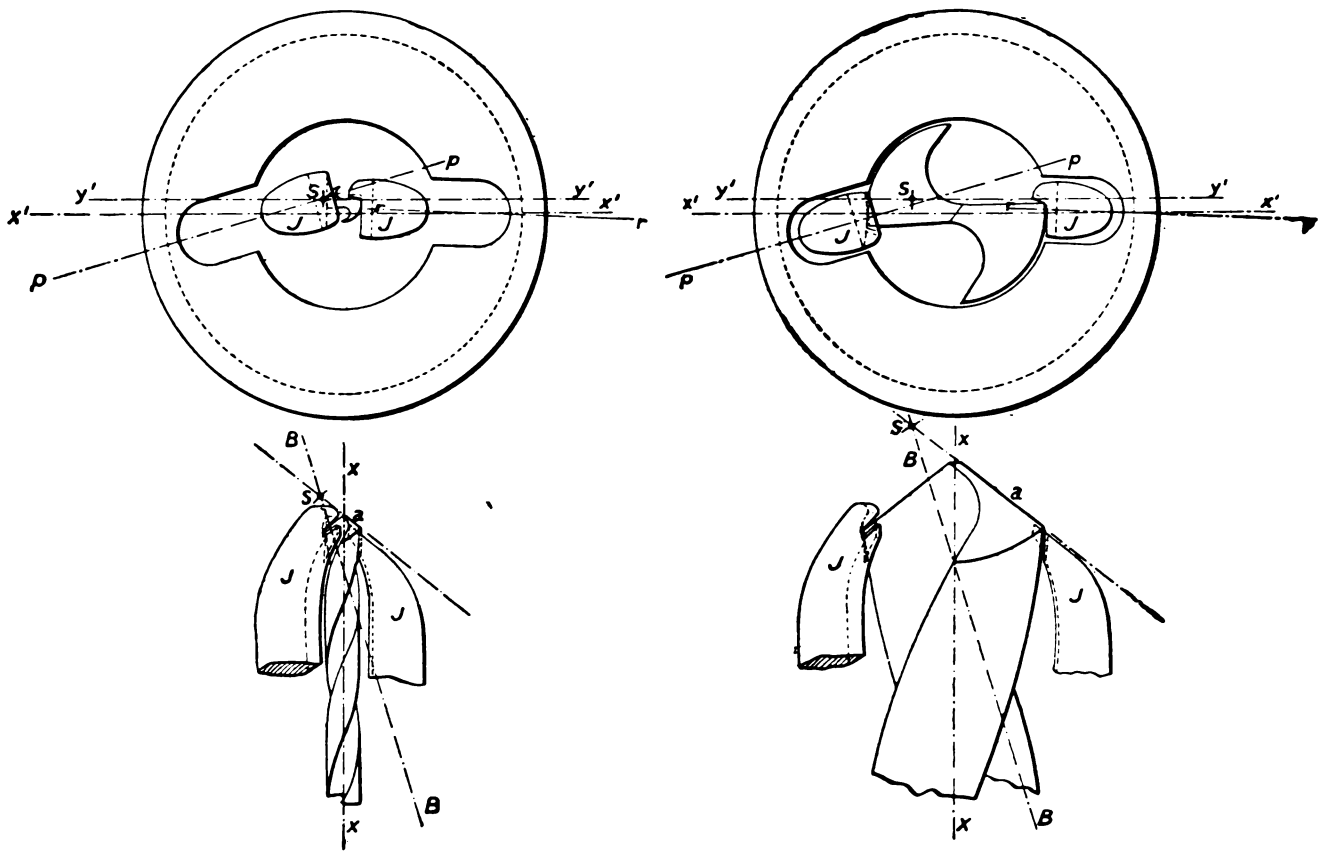

Fig. 2020.

to the line B in Fig. 2024. As a result the surface is ground to the form of a cone as denoted by the dotted lines in Fig. 2024. The results of the two systems are shown in Figs. 2025 and 2026, which represent the conical holes made by a drill.

In Fig. 2025 a cylinder R is shown lying in a conical recess,

and end views of the cylinder are shown at V and W. Now suppose the line of contact of the roll or cylinder upon the recess represents the cutting edge of the drill, and that we consider the clearance at the outer end, and at that part that in revolving would describe the circle Q, and on referring to circle V and the outer circle of the recess, and also to circles W and Q, it is seen that there is more clearance for V than there is for W, and that

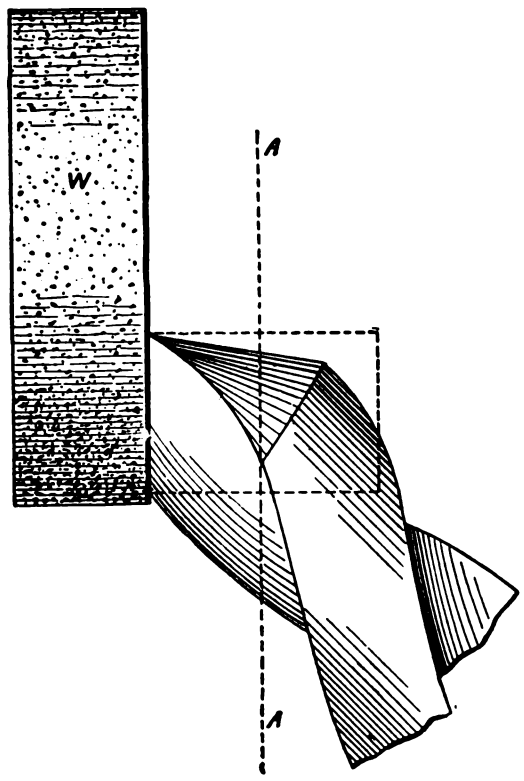

Fig. 2021.

the clearance of the latter would be still less if Q were of smaller diameter, and it follows that the clearance is less in proportion as the point of the drill is approached. In determining the amount of clearance, therefore, we are compelled to make it sufficient for the point of the drill, and this under this system of grinding is excessive for the outer diameter of the drill, causing

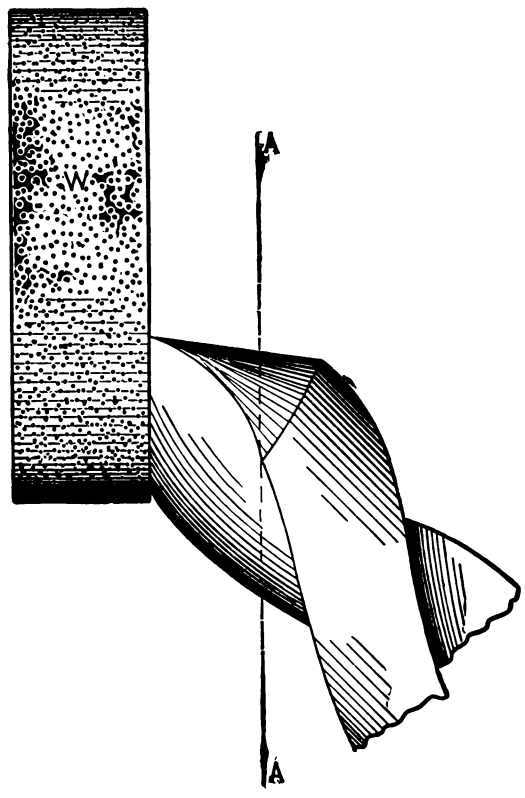

Fig. 2022.

it to dull quickly, it being borne in mind that as the outer corner of the cutting edge of a drill describes the largest circle of any point of the cutting edge it obviously performs the most cutting duty in removing metal, and furthermore revolves at the highest rate of cutting speed, both of which cause it to dull the most rapidly. In Fig. 2026 we have a cone R lying in the coned recess, an end view of the cone being shown at V and W, and if we again consider the line of contact of the cone on the recess to represent the cutting edge and the circumferential surface of the cone as the end surface of the drill, we observe in the end views V and W that the clearance is equal for the two positions, or by

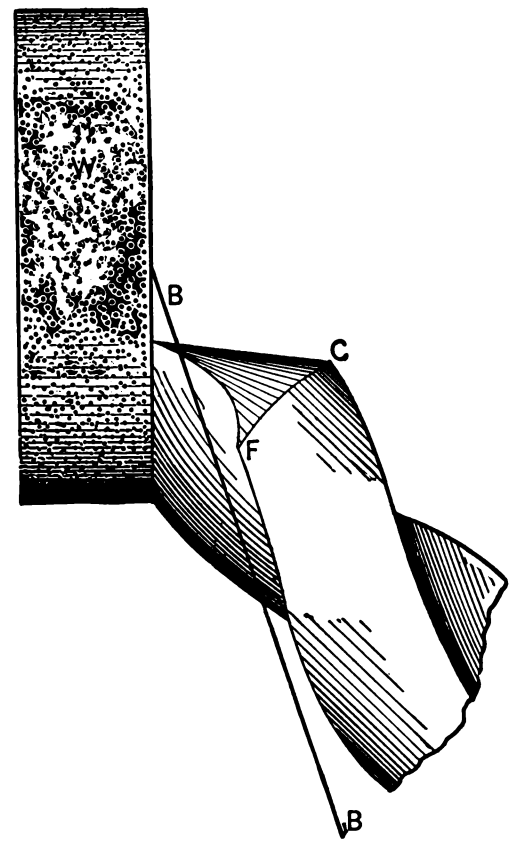

Fig. 2023.

varying the degree of taper of the cone we may regulate the amount of clearance at will. It is found preferable, however, to give more clearance as the point of the drill is approached so as to increase the cutting capacity; hence, in this case, the outer corner of the drill has the least clearance, which greatly increases its endurance for the reasons already mentioned, and which were further pointed out in the remarks upon drilling in the lathe. There remains, however, an additional advantage in this method of grinding which may be pointed out, inasmuch as that the clear-

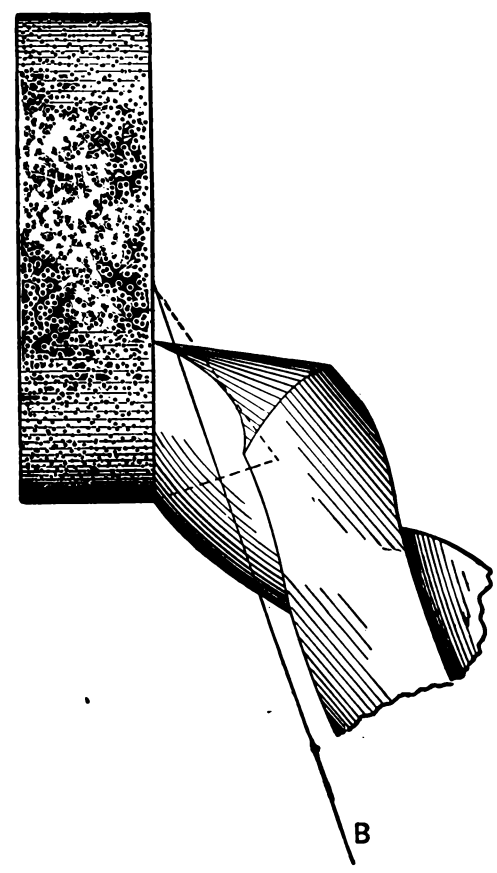

Fig. 2024.

ance produced by the method shown in Fig. 2019, while capable of being governed from end to end of the cutting edge, yet increases as the heel of the *land* is approached, making the central cutting edge (C, Fig. 2028) more curved in its length so that it approaches

the form of cutting edge of the fiddle drill and this enhances its cutting capability.

Referring again to the general view of the machine in Fig. 2019, the chuck is supported or carried by the shaft having the ball lever F, which is clearly seen in the rear view, Fig. 2027, and the rod carrying the sleeve B (which holds the centre for supporting the shank end of the drill) is secured to the back of the chuck, as seen in the same figure. When, therefore, lever F is moved

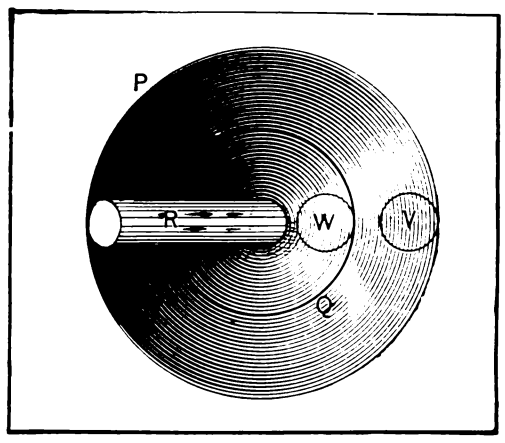

Top View.

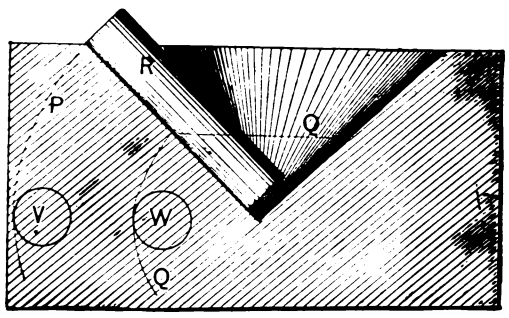

Section.

Fig. 2025.

over, the drill is moved through an arc of a circle of which the axis of the shaft of F is the centre, and this it is that gives clearance to the cutting edge of the drill.

The drill being chucked, the emery wheel is brought up to it by means of the hand wheel E, which moves the frame C laterally, the grinding being done by the side face of the emery wheel. On the same shaft as E is a lever which may be used in connection with the stop or pin (against which it is shown lying) to enable an adjustment of the depth of cut taken by the wheel separately when grinding each lip, and yet to permit both cutting edges of the drill to be gauged to the same length.

Suppose, for example, that the point of a drill has been broken so that it requires several cuts or traverses of the emery wheel to bring it up to a point again; then when this has been done on one cutting edge the lever may be set to the stop, so that when the grinding of the second cutting edge has proceeded until the lever meets the stop both edges will be known to be ground of the same length, and will, therefore, perform equal cutting duty when at work.

The depth of cut being adjusted, the lever D is operated to pass the side face of the emery wheel back and forth along the cutting edge of the drill, this lever rocking the frame C on which the emery wheel is mounted back and forth in a line parallel to the cutting edge of the drill. Different angles of one cutting edge of the drill to the other are obtained by swivelling the frame carrying the shaft of lever F. The emery wheel is cased in except at a small opening where it operates upon the drill, and may, therefore, be liberally supplied with water without the latter splashing over. Water is continuously supplied to the emery wheel by an endless belt pump, which also delivers water on the end of the drill, enabling heavy grinding cuts to be taken without danger of softening the drill at the cutting edge, which is otherwise apt to occur. The following is the method of operating the machine: Open the jaws of the chuck by means of the hand wheel A, insert the drill from the back of the chuck towards the face of the stone, letting the end of the drill rest on the lower jaw, with the cutting edge just touching the end stop; close the jaws temporarily, while the back centre B is run up and clamped; then release the jaws, hold the drill back against the back centre B with the left hand, at the same time rotating hard against the two side stops on the jaws; then tightly closing the jaws, clamp the drill by means of the hand wheel A, using the right hand for this purpose. Throw ball-handle F part way back, and by means of hand wheel E feed up the stone until it just touches the drill. Bring ball-handle F forward and give additional feed; pass the stone over the face of the drill, back and forth, by lever D, moving ball-handle F back a little between each two cuts. This slices off the stock to be removed; then when entirely over the face of the lip being ground, hold lever D stationary, and rotate the drill against the stone by means of ball-handle F. By this means a heavy slicing cut can be taken and a final smooth finish obtained without any risk of drawing the temper of the drill.

When one lip has been thus formed, slack up the jaws of the chuck, turn the drill half around, pressing its lips as before against the side stops on jaws, and at the same time be sure to hold the drill firmly back against the back centre B (pay no attention to the end stop, which is only used in locating the drill endways in the first setting), tighten chuck, and grind the second lip without any readjustment of the stone. The lips will then be of equal length. During all these manipulations the stop that is arranged in connection with hand wheel E can be slack, and may rest against the pin in the bed made to receive it.

Fig. 2027 represents a rear view of the machine, at which there is an attachment for thinning the point of the drill, which is advantageous for the following reasons. In Fig. 2028 we have a side and an end view of a twist drill, and it can be shown that

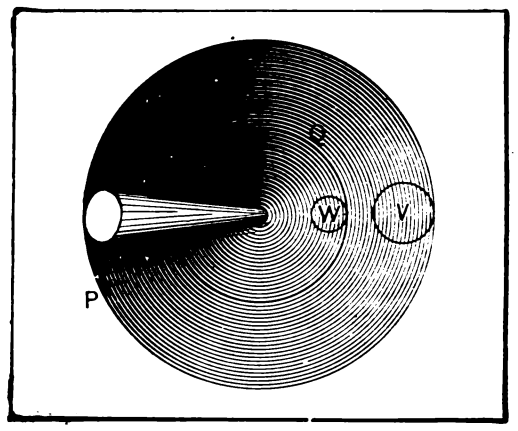

Top View.

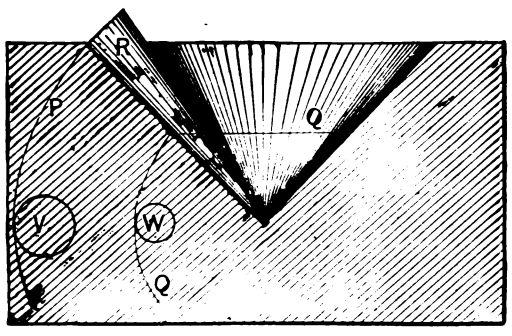

Section.

Fig. 2026.

the angular piece of cutting edge C that connects the two edges A and B cannot be given sufficient angle to make it efficient as a cutting edge without giving clearance and angle excessive to the edges A and B.

In Fig. 2029 we may consider the angle of the cutting edge at the corner H and at the points F and G. First, then, it is obvious that the front face for the point H is represented by the line H *h*, that for F by line F *f*, and that for G by G *g*, and it appears that

on account of the spiral of the flute the front face has less angle to the drill axis as the point of the drill is approached.

Considering the end of the drill, therefore, as a cutting wedge, and considering the cutting edge at the two points C and E, in Fig. 2030, the end face being at the same angle, we see that the point C has the angle A and point E the angle B; at the drill point there will be still less cutting angle, and it has, therefore, the least

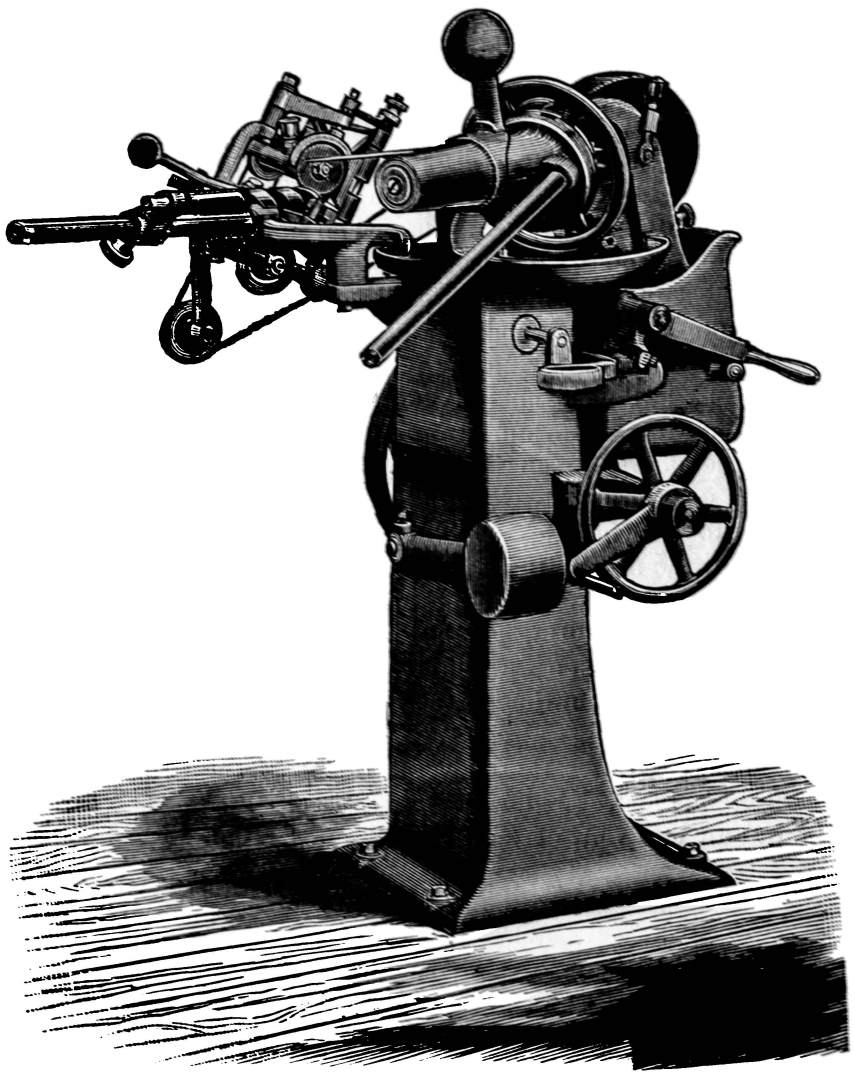

Fig. 2027.

cutting capacity. To remedy this the attachment shown in the figure is employed, consisting of a frame or head carrying a thin emery wheel, and capable of adjustment to any angle to suit the degree of spiral of the drill flute.

By means of this emery wheel a groove is cut in the flute at the point of the drill, as shown in Fig. 2031, at A and B, thus reducing the length of C, and therefore increasing the cutting

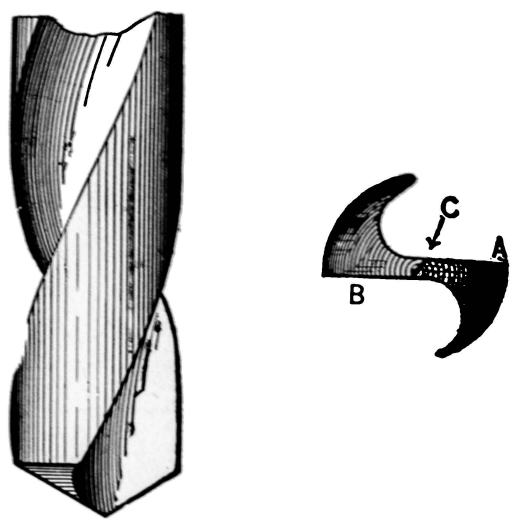

Fig. 2028.

capacity and correspondingly facilitating the feed of the drill. It is found, indeed, that by this means the drill will perform 15 per cent. more duty.

It is obvious, however, that as the thickness of drills at the point increases in proportion to the diameter of the drill, this improvement is of greater advantage with large than with small drills. The reason for augmenting the thickness at the centre with the drill diameter is that the pressure of the cut acts to unwind the spiral of the drill, and if the drill were sufficiently

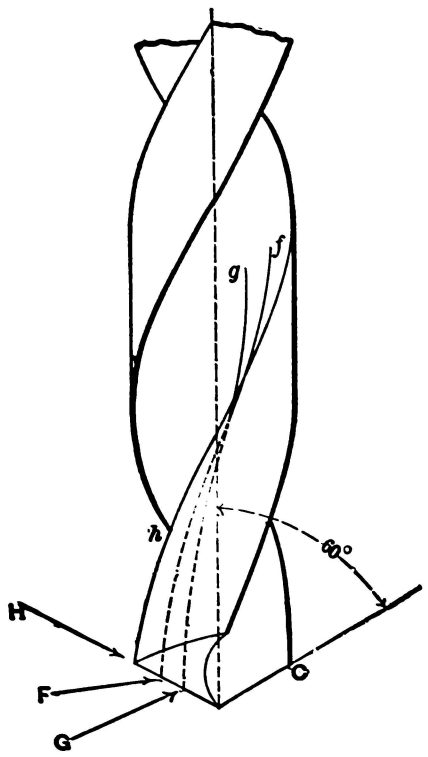

Fig. 2029.

weak at its axis this unwinding would occur, sensibly enlarging the diameter of hole drilled, more especially when the drill

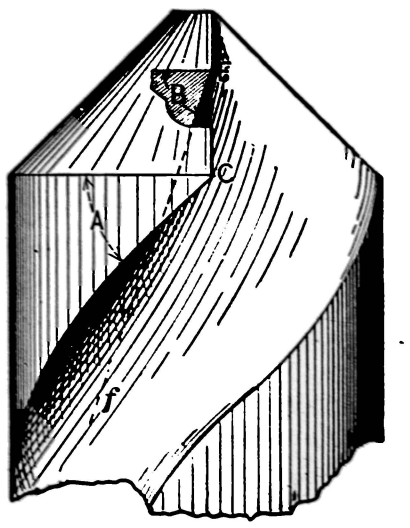

Fig. 2030.

became partly dulled and the resistance of the cut increased.

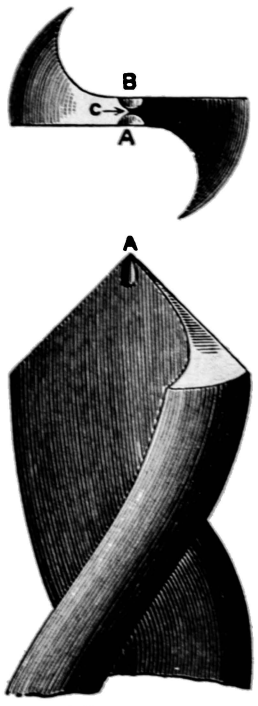

Fig. 2031.

By means of the small grooves A and B, however, the point is thinned while the strength of the drill is left unimpaired.

A CUTTER GRINDING MACHINE, No. 2.—This machine, designed and constructed by the Brown & Sharpe Mfg. Co., is shown in Fig. 2032. It is well adapted for use by manufac-

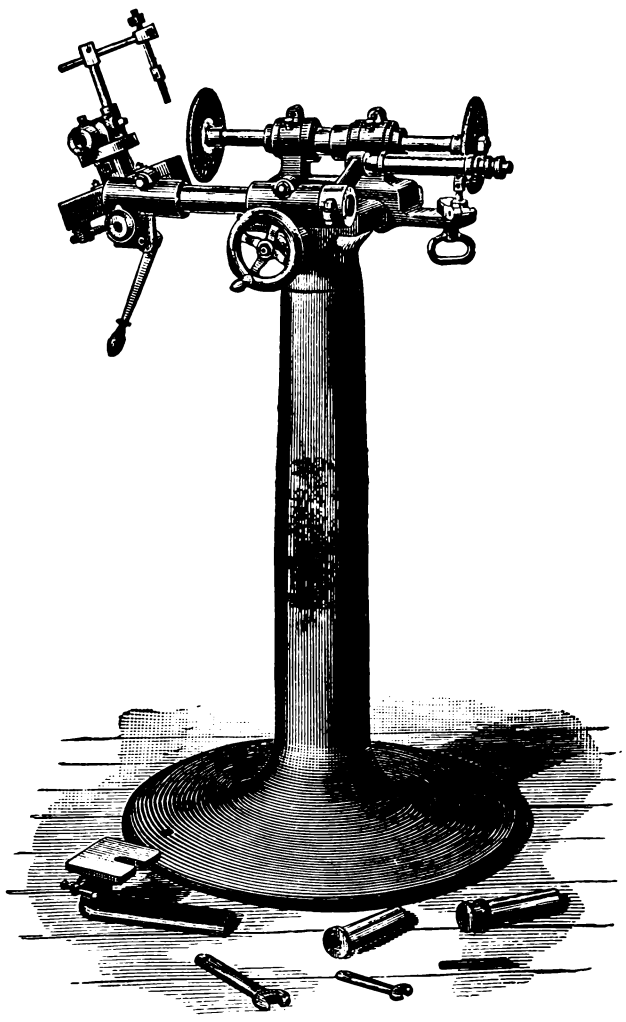

Fig. 2032.

turers of tools and by machine makers generally. It is suitable for grinding cutters of all kinds, and, although especially adapted to a wide range of work, it is economical even where comparatively few cutters are to be ground. The machine grinds cutters to 6 inches in length and 6 inches in diameter, and thin milling cutters or saws to 24 inches in diameter. Careful attention has been given, in its design, to insure rigidity and prevent vibration. Plain bearings are scraped to surface plates, and cylindrical bearings are ground to standards, thus insuring correct alignments. Adequate provision is made for protecting the wearing parts from emery grit and dirt. The spindle head slide P', Fig. 2033, carries the spindle and is adjusted by means of the hand wheel B. The spindle is of steel, hardened, ground, and lapped, and runs in bronze boxes provided with means of compensation for wear. It is driven by a cone pulley, having two steps for 1-inch belt. Provision is made for longitudinal adjustment of the spindle; the cone can be quickly released, the spindle adjusted, and the cone again clamped in position.

The main bar A, and the ¾-inch cutter bar K, Fig. 2033, are

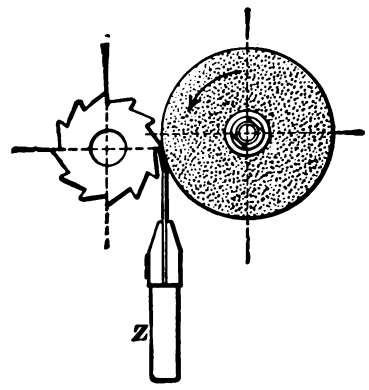

Fig. 2034.

of steel, hardened and ground. The countershaft has tight and loose pulleys 6 inches in diameter for 2-inch belt, and should run 375 revolutions per minute. The countershaft should be placed directly over the spindle when the spindle head is central in its traverse.

The machine should be driven with a 1-inch belt put on quite loosely. This will be ample to drive the spindle and allow traverse of spindle head without unnecessary friction being brought upon the spindle bearings.

In operating the machine the work is moved on and off the wheel, there being no lateral movement of the wheel, except adjustment for position.

Any machine using emery requires more care and attention than most others. Although dust guards and caps are provided for the wearing parts, it is well to frequently wipe and oil the machine. Fig. 2033 shows the method of arranging the machine to grind straight milling cutters to 6 inches long and 6 inches

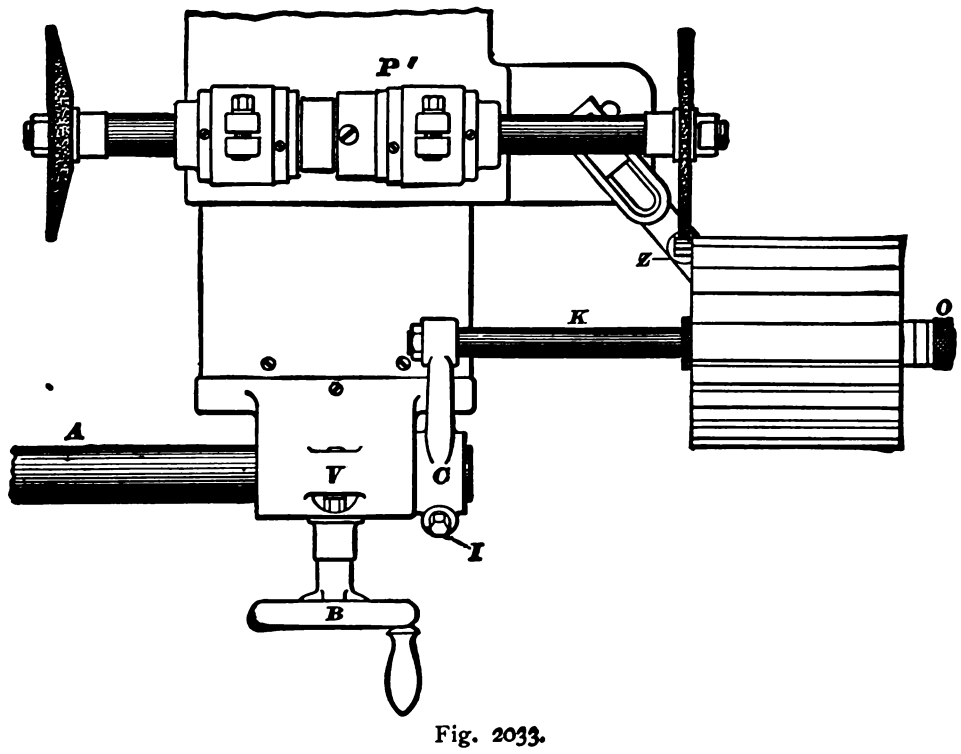

Fig. 2033.

in diameter, with holes $\frac{7}{8}$ inch or more in diameter, and with teeth either straight or spiral. The work is carried on a sleeve which slides upon the bar K.

One of the teeth is brought against the tooth rest Z, as in Fig. 2034, while the mill is moved axially until the whole length of the tooth is presented to the grinding wheel, and the tooth passes off the tooth rest. Another tooth is then brought against the tooth rest and the foregoing operation is repeated until all the teeth are ground. Milling cutters to 6 inches long and 6 inches in diameter, and thin cutters or saws to 24 inches in diameter, can be ground

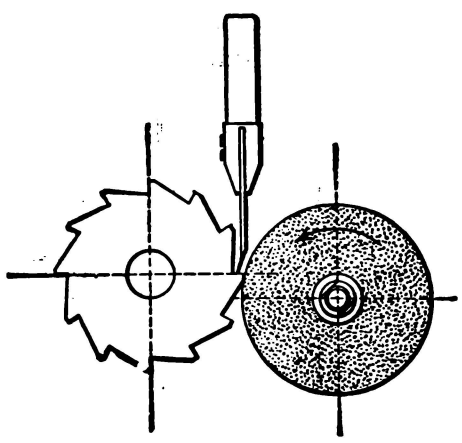

Fig. 2035.

in this way. Mills and cutters with spiral teeth are ground the same as shown in Fig. 2033, except that the tooth rest should be set at the same angle as the spiral of the cutter or mill to be ground. This may be obtained by setting the rest so that the top edge will touch the face of the cutter teeth evenly at both ends, for if one end of the rest is lower than the other the cutter tooth will drop in sliding on or off, and leave a high place on that

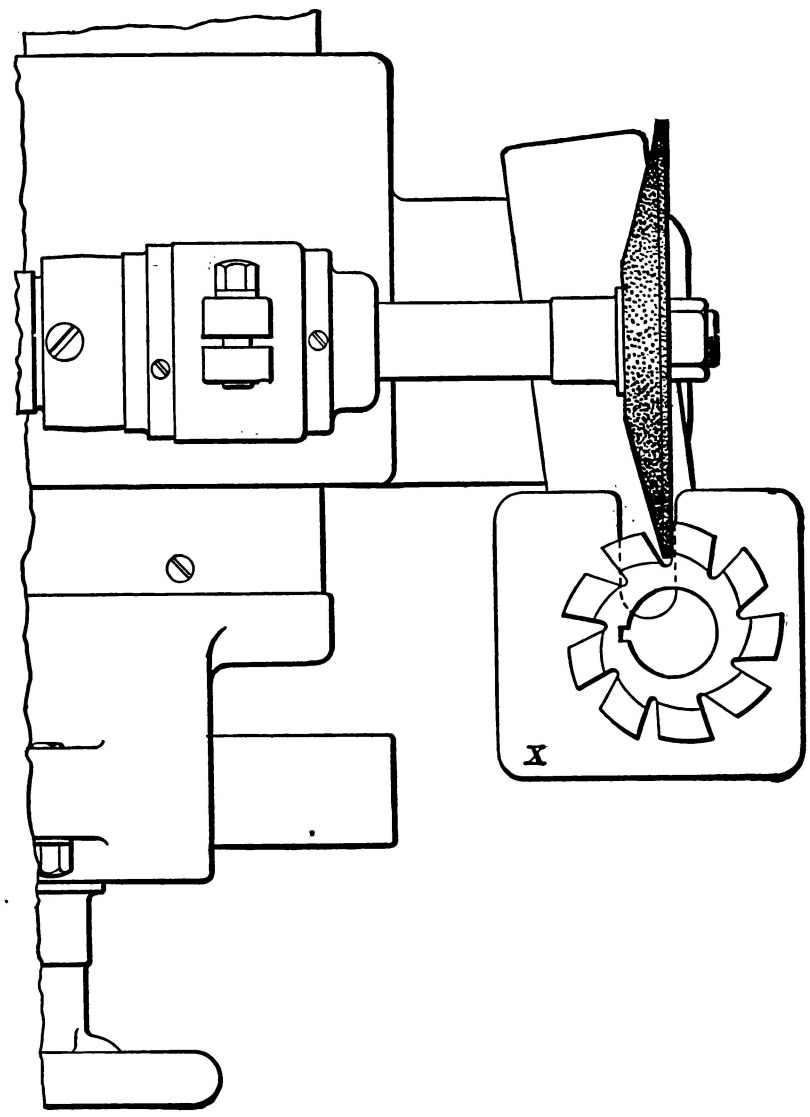

Fig. 2036.

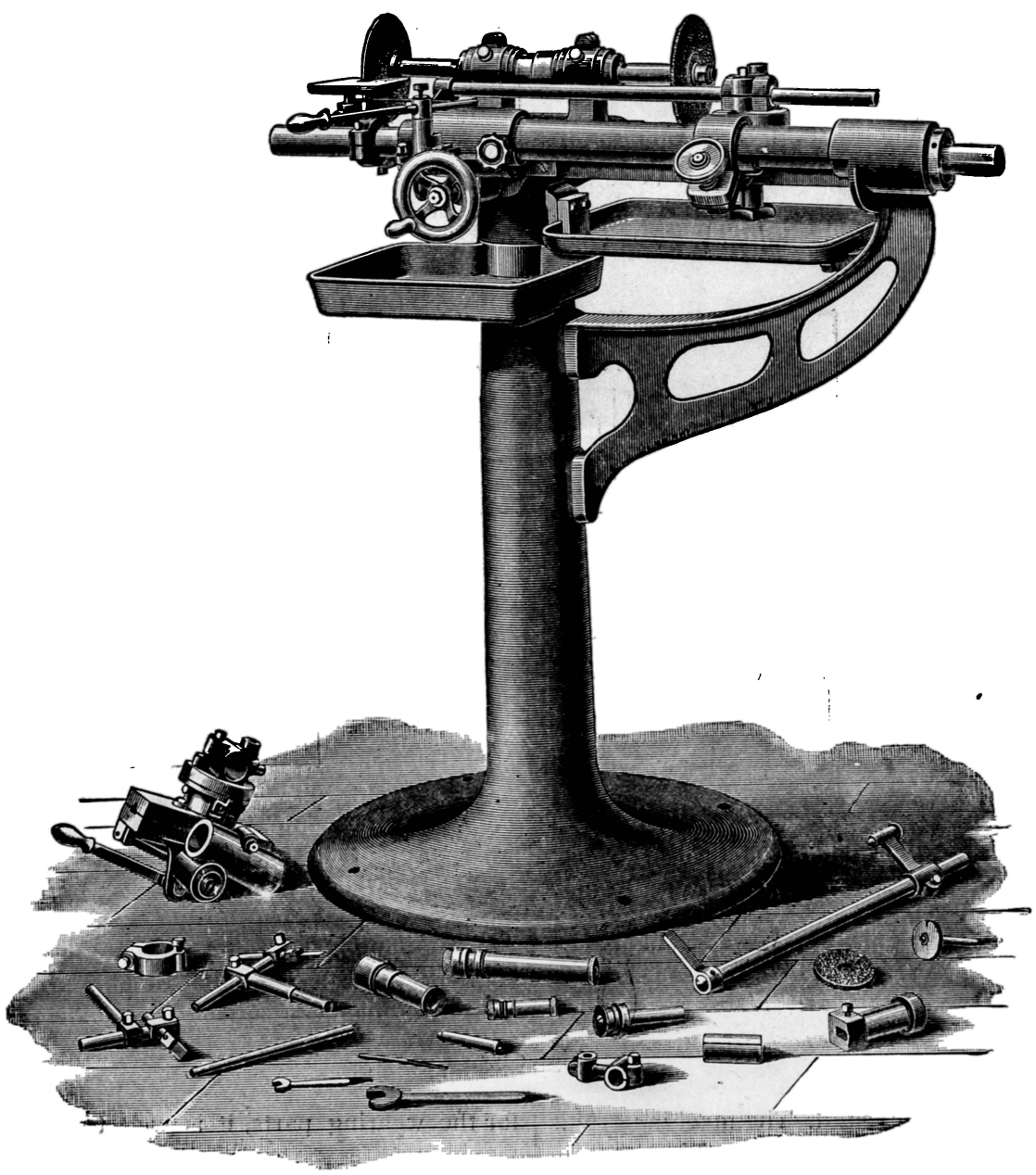

Fig. 2037.

end of the cutter. To insure the cutter or mill sliding perfectly free the tooth rest should be slightly rounded on the corners. The tooth rest should be perfectly flat on top and somewhat wider than the wheel, so that the cutter will pass off the wheel before the tooth passes off the tooth rest. It will readily be seen that if the top of the rest was uneven or narrower than the wheel, the teeth might not be correctly ground, as, during a portion of the time, the teeth would not be supported while the wheel was acting upon them. A coarse grade of wheel, just hard enough so that when in use the emery will not fly, is found best suited for most classes of work and less liable to draw the temper.

It is well to turn away a part of the face of the wheel, leaving about ⅛ inch of the face to act upon the teeth of the cutter. This reduces the risk of heating and taking temper out of the cutter teeth. The wheel should be kept clean, as a glazed or dirty wheel will instantly draw the temper of the work. To clean the side of the wheel when it becomes glazed or dirty, sprinkle coarse emery upon a common surface plate and rub the surface of the wheel lightly upon same; this will leave the sharp particles of emery free to cut. The face, or periphery, of the wheel is cleaned with a diamond in the usual way. While it may not require so skilful a workman to operate this machine as it does to run a lathe or planer, yet it could hardly be expected that any one would become a successful operator until he had run the machine for several days. One of the first troubles may be drawing the temper out of the cutter teeth—this may be caused by attempting to grind off too much at one time or by having the cutting part of the wheel too wide. Another trouble may be that a tooth slips away from the tooth rest and the wheel scores the cutter. If the teeth of cutters are too thick there is more liability of drawing the temper. It is a good plan to first make a few movements of the cutter, as if grinding, before starting the emery wheel. The safest way is to run the wheel off of the cutting edge, as shown in Fig. 2034, as by running in this direction there is no danger of the work being drawn away from the tooth rest by the action of the wheel. But a keener cutting edge can be secured by running the wheel on to the cutting edge, as shown in Fig. 2035.

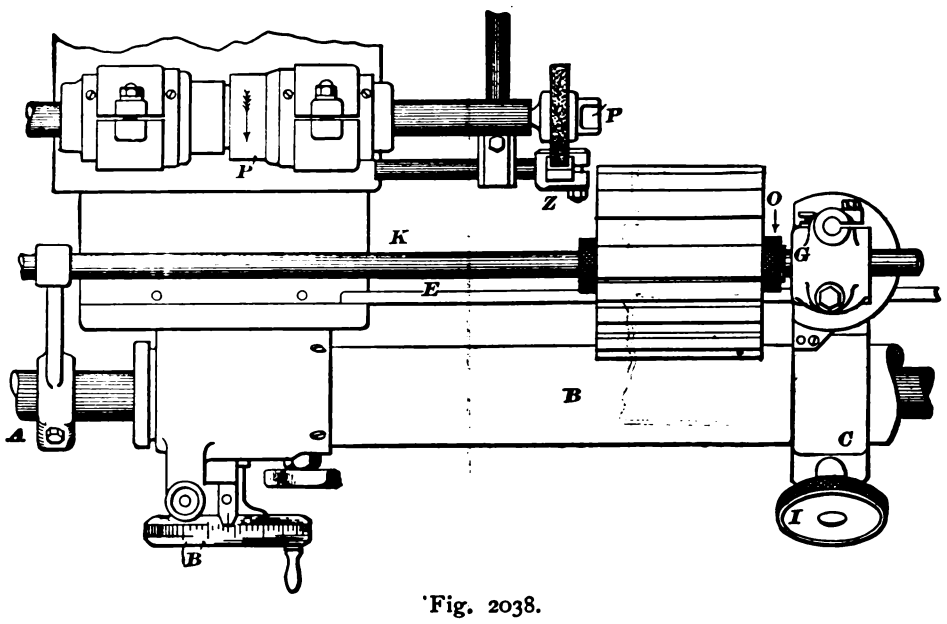

Fig. 2038.

The clearance of the teeth back of the cutting edge is obtained, when the teeth face downward, by having the centre of the work below the plane of the axis of the wheel, as in Fig. 2034; and, when the teeth face upward, by having the centre of the work above the centre of the wheel, as in Fig. 2035. The dotted lines indicate the relative positions of the centres of the wheel and work.

Formed cutters are ground as shown in Fig. 2036, the cutters being kept square with the wheel by the rest X. The faces of teeth of gear cutters and of formed cutters must be ground radial, because if ground otherwise the shape of the work cut by them will not be correct. By having a free cutting wheel and taking light cuts across the teeth there will be no trouble from drawing the temper.

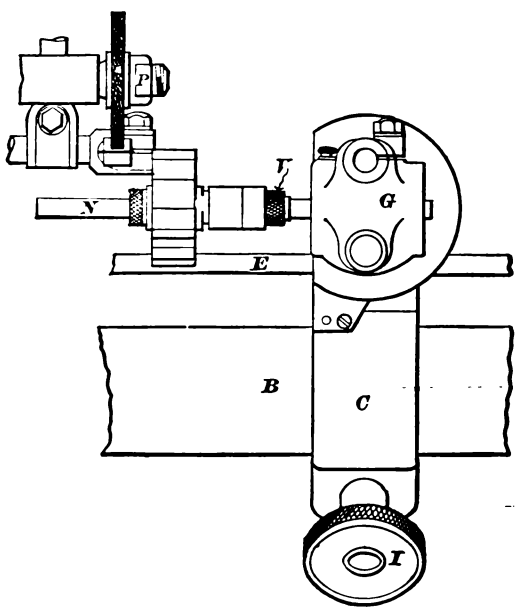

Fig. 2039.

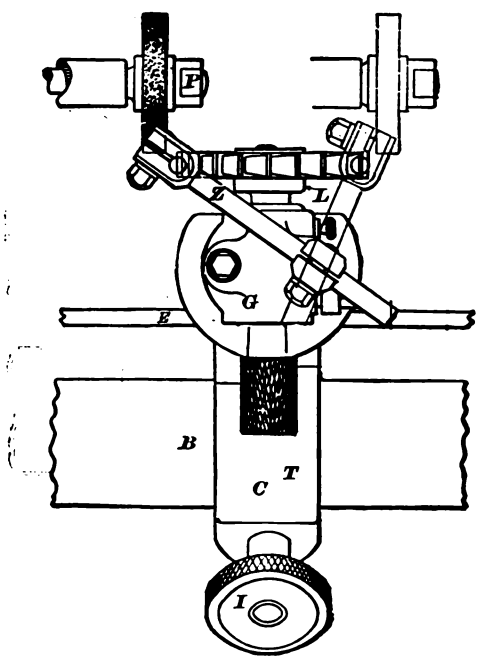

Fig. 2040.

The economy of keeping the cutters sharp cannot be too strongly urged. A workman seldom wastes a cutter by too frequent grinding, but a cutter rapidly deteriorates if a workman uses it when dull.

No. 3 Universal Cutter and Reamer Grinder, Fig. 2037. —This machine is designed for manufacturers of tools and for machine makers generally. It is capable of grinding quickly and accurately all kinds of cutters and reamers.

The spindle head slide P′, Fig. 2038, carries the spindle, and is adjusted by means of the hand wheel B′, graduated to read to thousandths of an inch.

The spindle is of steel, hardened and ground, and runs in bronze boxes provided with means of compensation for wear. It is driven

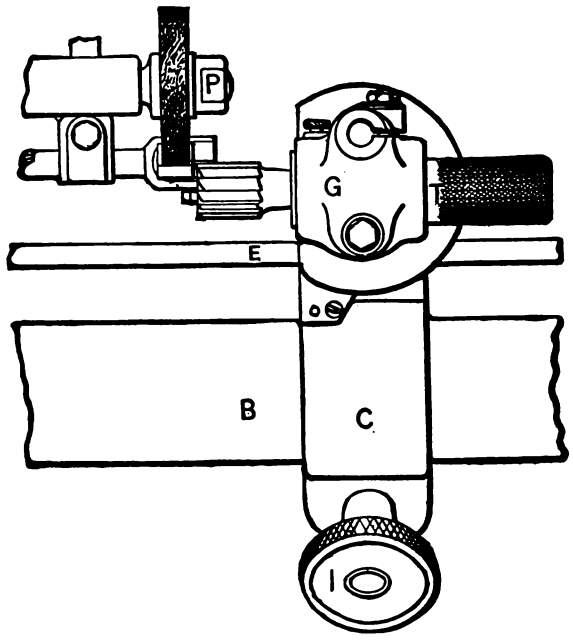

Fig. 2041.

by a two-step cone pulley for 1-inch belt. Dust guards are placed over both ends of the boxes, protecting the running parts.

The main guide bar A, Fig. 2038, is of steel, hardened and ground. The bar is provided with a guard to protect it from dust.

The $\frac{3}{8}$-inch and $\frac{3}{4}$-inch cutter bars are of steel, hardened and ground.

The swivel head G carries different fixtures for holding angular cutters, end mills, etc. It is graduated and is adjustable to any angle. It has a vertical adjustment by means of the wheel H, Fig. 2047.

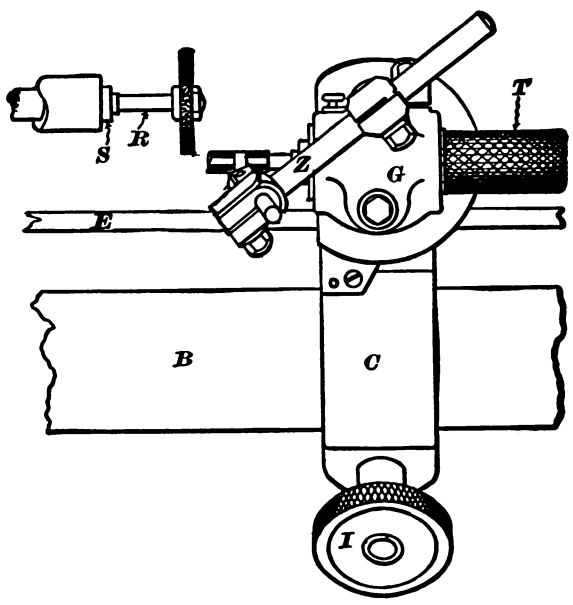

Fig. 2042.

The sliding head C, Figs. 2038, 2039, etc., carries the swivel head G. An adjustable hand lever that can be placed upon the main guide bar provides for the easy movement of work held in the swivel head G.

In the following are given a few illustrations of some of the various kinds of work that can be done upon the machine. The cuts will also show how to arrange the machine for doing the work. The cuts show but one way of doing each kind of work illustrated, but often there are several ways of doing the same job. Thus the radial teeth of side mills, Fig. 2040, can be ground in the compound swivel head, and the peripheral or outer teeth, Fig. 2041, can be ground on the centres as in Fig. 2045.

In operating the machine, the work is moved on and off the wheel, there being no lateral movement of the wheel.

A machine using emery requires more care to keep it clean than most machines. Although provided with a dust guard it is well to frequently wipe and oil the main guide bar. By having this bar move easily the grinding can be made smoother.

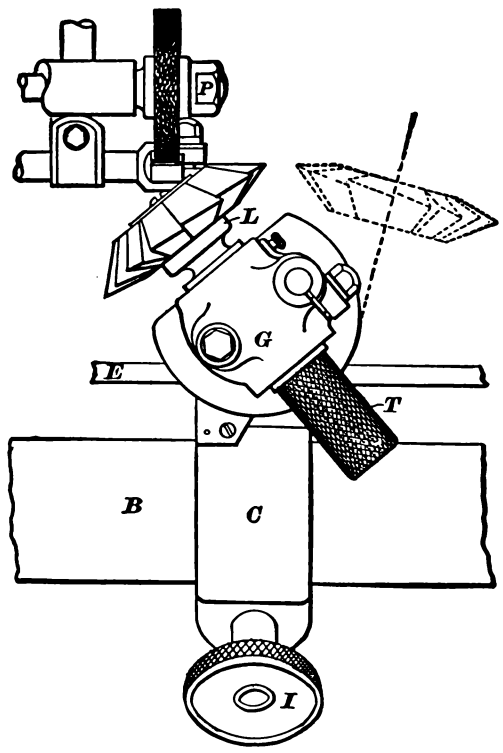

Fig. 2043.

Fig. 2038 illustrates how to arrange the machine to grind straight milling cutters and straight shell reamers to 6 inches diameter and 7 inches long, with holes $\frac{7}{8}$ inch or more in diameter and with teeth either straight or spiral. In this operation the head C does not slide, but firmly holds the cutter rod or bar K upon which the work slides. One of the teeth is brought against the tooth rest Z, as in Fig. 2047, while the mill is moved axially until the whole length of the tooth is presented to the grinding wheel and the

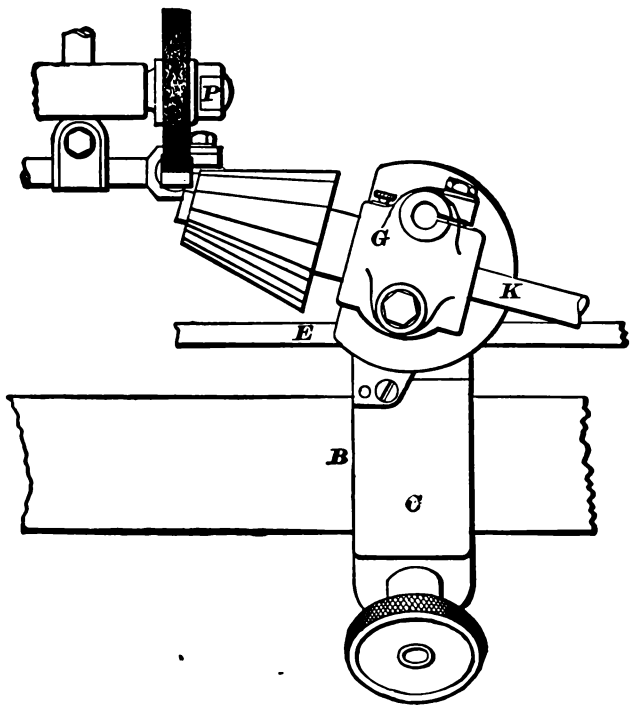

Fig. 2044.

tooth passes off the tooth rest. Another tooth is then brought against the tooth rest and the foregoing operation is repeated until all the teeth are ground. Milling cutters and shell reamers to $12\frac{1}{2}$ inches long, either straight or taper, can be ground on arbors held between the centres, as shown in Figs. 2045 and 2046.

Mills and cutters with spiral teeth are ground the same as shown in Figs. 2038 and 2041, except that the tooth should be set at the same angle as the spiral of the cutter or mill to be ground. This

may be obtained by setting the rest so that the top edge will touch the face of the cutter teeth evenly at both ends, for if one end of the rest is lower than the other the cutter tooth will drop in sliding on or off and leave a high place on that end of the cutter. To insure the cutter or mill sliding perfectly free the tooth rest should be slightly rounded on the corners.

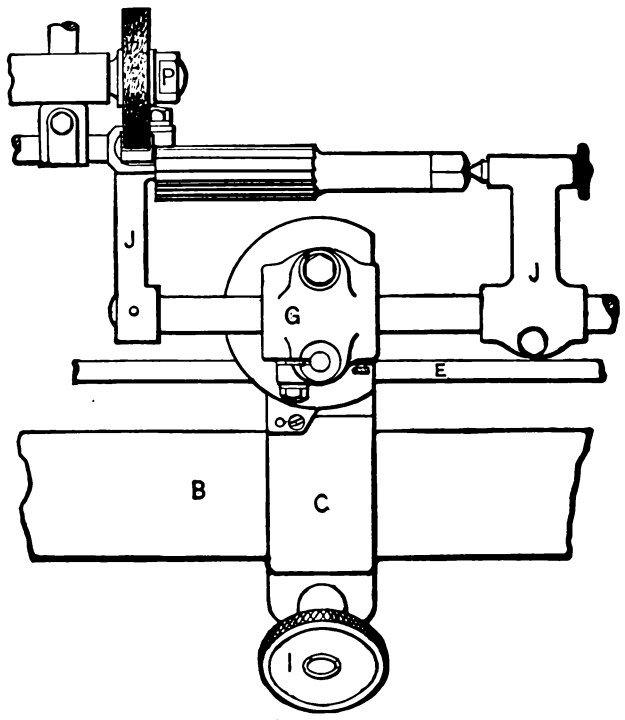

Fig. 2045.

The tooth rest should be perfectly flat on top and somewhat wider than the wheel, so that the cutter will pass off the wheel before the tooth passes off the tooth rest. It will readily be seen that if the top of the rest was uneven or narrower than the wheel, the teeth might not be correctly ground, as during a portion of the time the teeth would not be supported while the wheel was acting upon them.

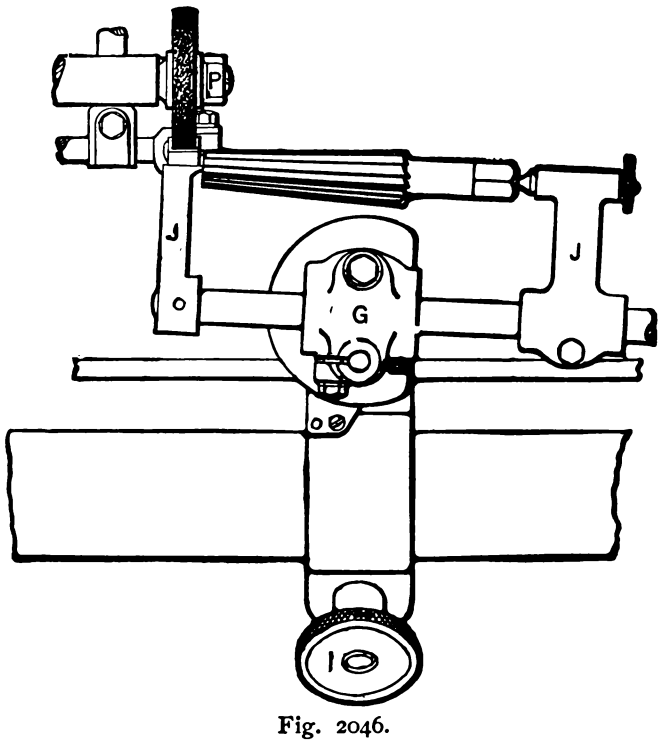

Fig. 2046.

A coarse grade of wheel, just hard enough so that when in use the emery will not fly, will be found best suited for most classes of work and less liable to draw the temper.

It is well to turn away a part of the face of the wheel, leaving about ⅛ inch of the face to act upon the teeth of the cutter. This reduces the risk of heating and taking temper out of the cutter teeth.

The wheel should be kept clean; a glazed or dirty wheel will instantly draw the temper of the work.

Fig. 2039 is for the same kind of work as Fig. 2038 when the holes are less than ⅞ inch in diameter.

While it may not require so skilful a workman to operate this machine as it does to run a lathe or a planer, yet it could hardly be expected that any one would become a successful operator until he had run the machine for several days. One of the first troubles may be taking temper out of the cutter teeth—this may be caused by attempting to grind off too much at one time or by having the cutting part of the wheel too wide. Another trouble may be that a tooth gets away from the tooth rest and the wheel scores the cutter. If the teeth of cutters or reamers are too thick there

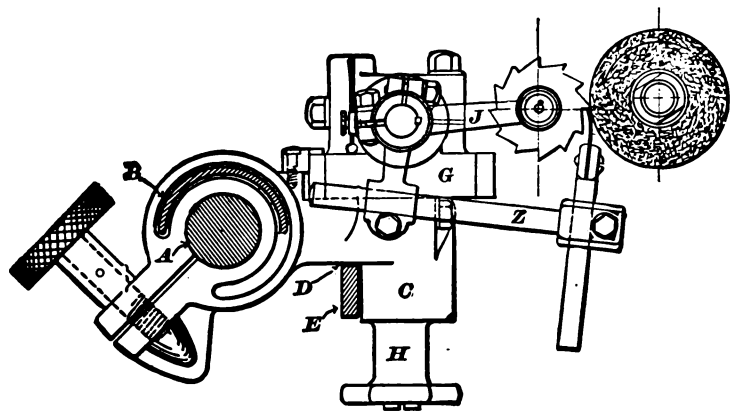

Fig. 2047.

is more liability of drawing the temper. At first it is a good plan to make a few movements of the cutter as if grinding, before starting up the emery wheel.

Fig. 2040 shows one arrangment for grinding the radial teeth or sides of straddle mills or face mills. The sliding head C is clamped to the main sliding bar under B by means of the screw I, the bar then moving with the sliding head C. On the swivel head, at the left of G, there is a boss in the casting for gauging the height of the tooth rest Z. The dotted portion of the figure on the right shows the position of parts when grinding on the right-hand side. This change is made when changing from one side of the cutter or mill to the other side, the mill also being reversed upon the arbor L. This kind of work can be done to better advantage by the use of the compound swivel head.

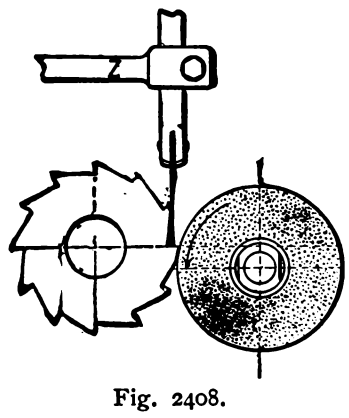

Fig. 2408.

The grinding of the peripheral or outer teeth of end mills is illustrated by Fig. 2041. Work of this character can also be done on the centres, as in Fig. 2045.

Fig. 2042 is for smaller mills of the same character as in Fig. 2041. A smaller emery wheel is used and the tooth rest Z is attached to the swivel head. The teeth, as they are ground, face upwards.

A mill being held by its shank, as shown in Figs. 2041 and 2042, insures the teeth being ground true with the shank.

When the teeth are ground on centres, as in Fig. 2045, unless the shank is true with the centres the teeth will not be true with the shank.

Angular cutters can be ground as in Fig. 2043; the swivel head G being set at the required angle.

When angular cutters are too thick to be held upon the arbor L,

as in Fig. 2043, they can be placed upon the bar K, as in Fig. 2044. This arrangement is also applicable to taper shell reamers. When the holes are $\frac{7}{8}$ inch or larger, the cutter shell O, Fig. 2038, can be used. The sliding head C is moved and the work does not slide upon the bar K.

In grinding solid reamers, the centres J J, Fig. 2045, are used, the centre bar being held by the swivel head G.

In grinding solid taper reamers, Fig. 2046, the arrangement is

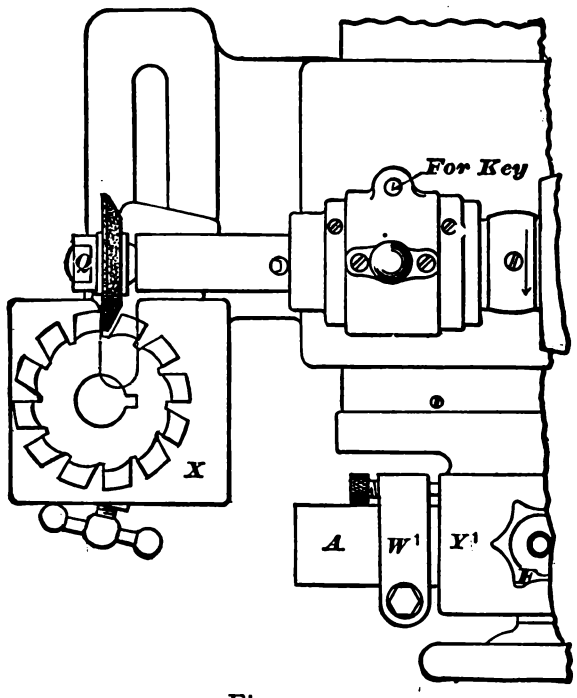

Fig. 2049.

similar to Fig. 2045, the swivel head G being set at an angle for the taper.

Fig. 2047 is an end view of Fig. 2045, with the position of the tooth rest Z changed and fastened to the bar of the centres which is held by the swivel head G. This is applicable to reamers and cutters where the teeth are cut straight and the plane of each tooth passes through the axis, and is sometimes preferred because the tooth rest moves with the work.

Fig. 2047, as there is no liability of the work being drawn away from the rest by the action of the wheel.

In grinding angular cutters and taper reamers having straight teeth, it is necessary to have the axis of the work and the tooth rest in a plane that is parallel to the line in which the work travels.

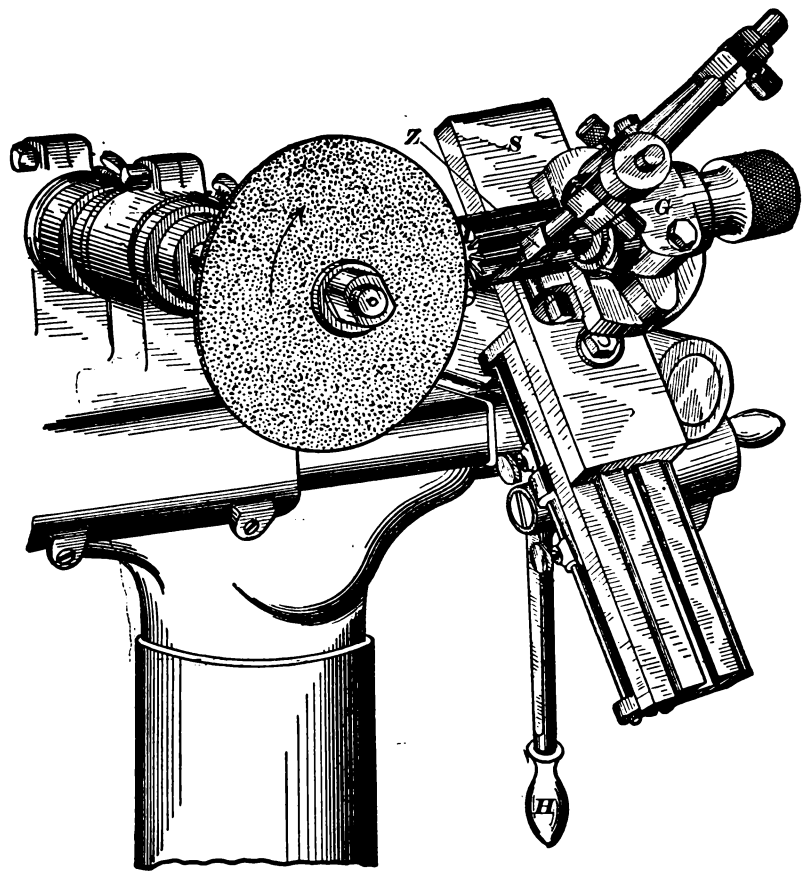

Fig. 2051.

The clearance of the teeth back of the cutting edges is obtained, when the teeth face downwards, by having the centre of the work below the plane of the axis of the wheel, as in Fig. 2047, but when the teeth face upwards, as in Fig. 2048, the centre of the work is above the centre of the wheel; the dotted centre lines in Figs. 2047 and 2048 will illustrate this.

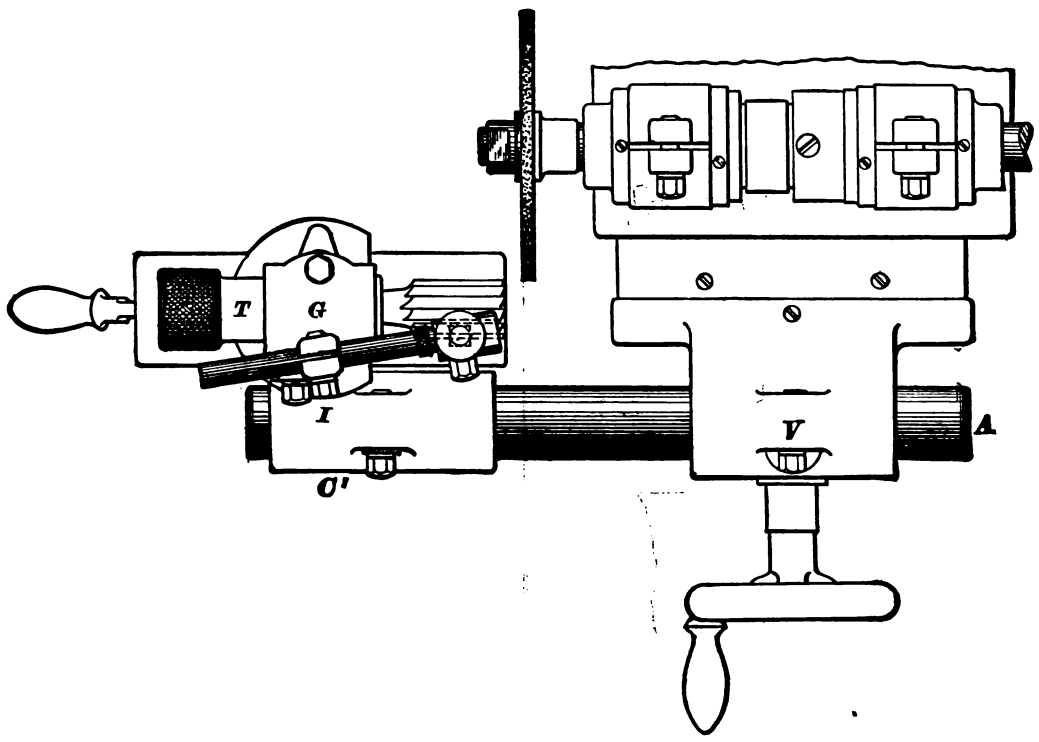

Fig. 2050.

When practicable it is better to grind cutters with the emery wheel running on to the cutting edge, as shown in Fig. 2048, thus securing a keener cut on the tooth. In grinding the clearance on the teeth of reamers it is best to grind them in a universal grinding machine, leaving them about .0005 inch larger than the size required, and in backing off the teeth for clearance leave a fine line, to be stoned out, along the cutting edge. By this method a keener cutting edge is secured for the reamer than could be obtained with the emery wheel, so that the safest way is to run as shown in

In the previous illustrations, the work has been done with the wheel on the right, but Brown & Sharpe gear cutters and formed cutters are sharpened with the left-hand wheel, as in Fig. 2049, the cutters being kept square with the wheel by the rest X. The faces of teeth of gear cutters and of formed cutters must be ground radial, because if the teeth are not radial the shape of the work cut by them will not be correct.

By having a free cutting wheel and taking light cuts across the teeth there will be no trouble from drawing the temper. The

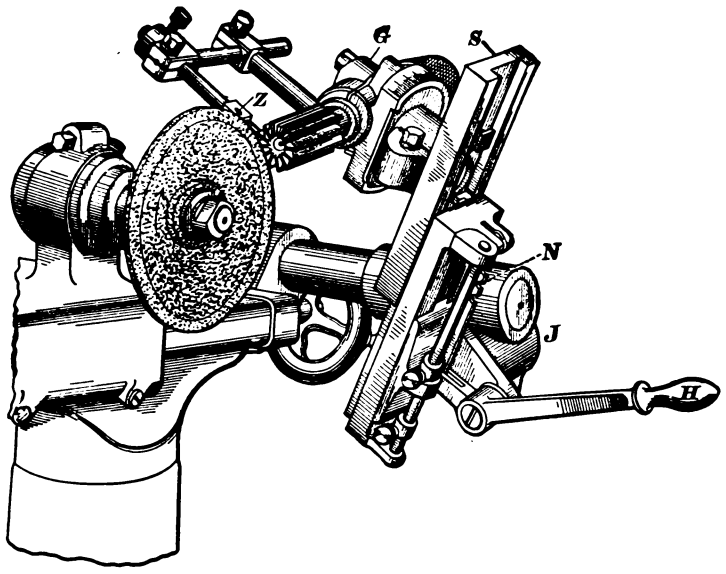

Fig. 2052.

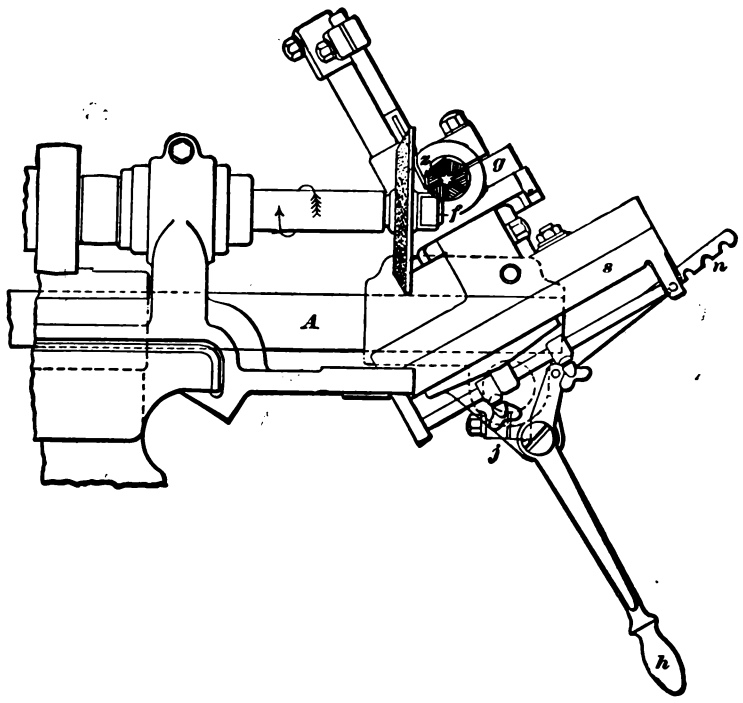

Fig. 2053.

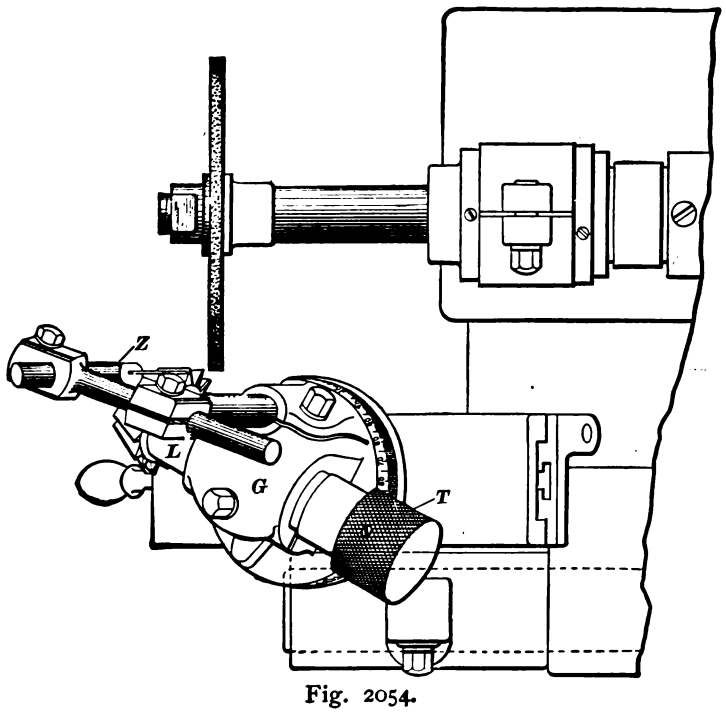

Fig. 2054.

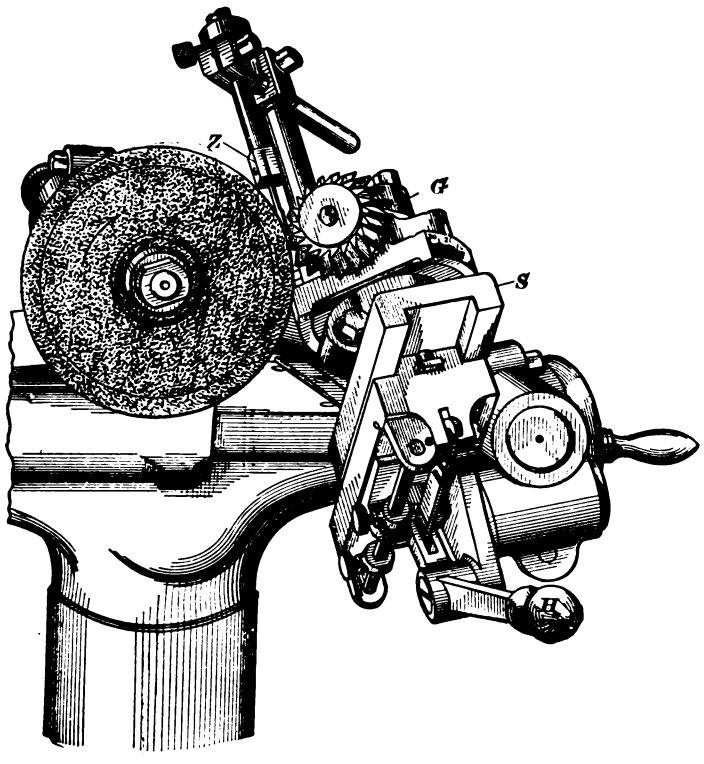

Fig. 2055.

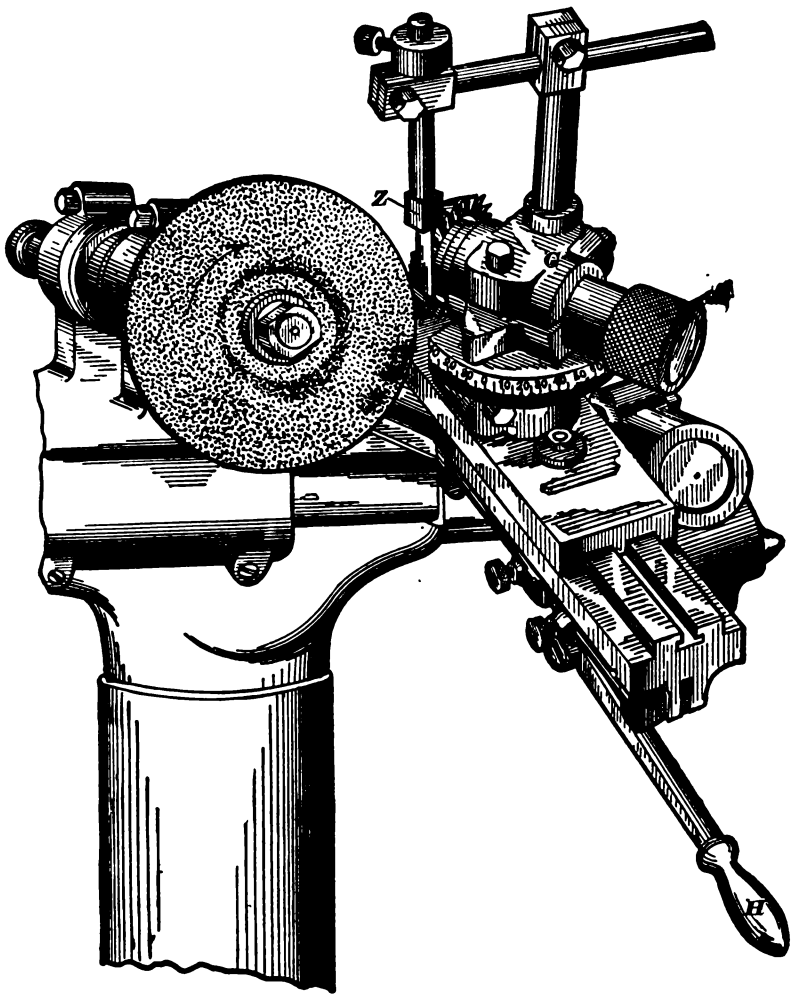

Fig. 2056.

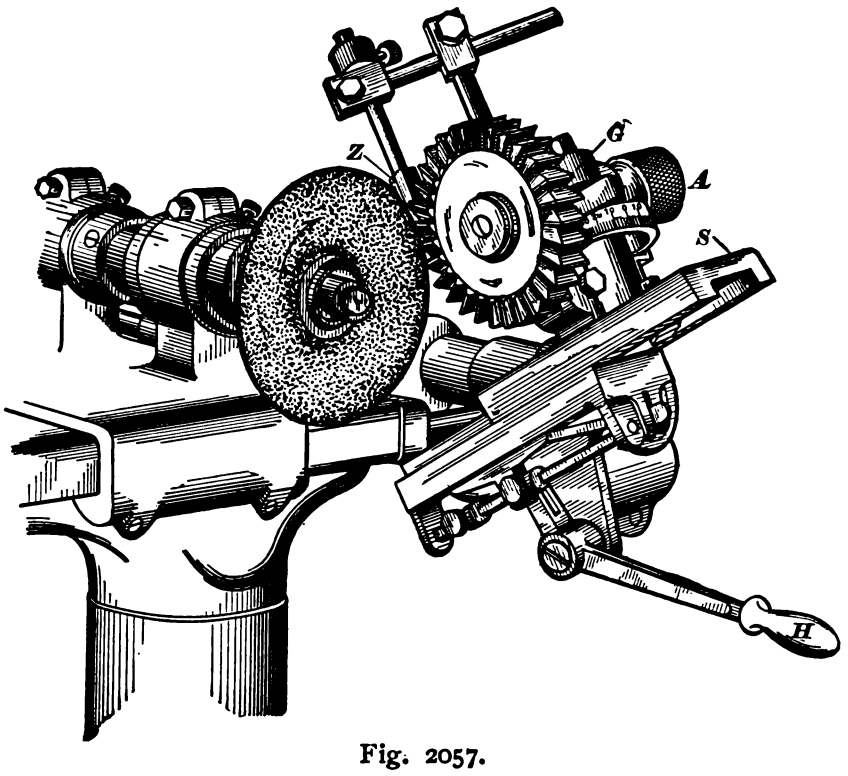

Fig. 2057.

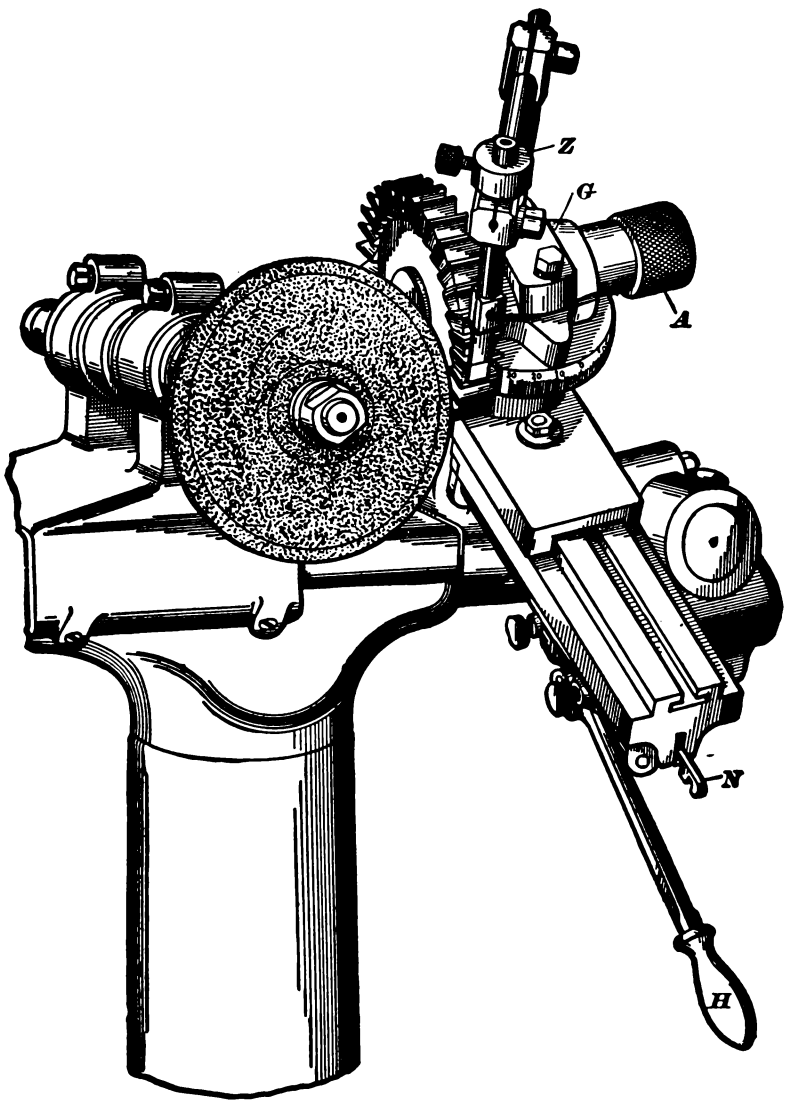

Fig. 2058.

wheel must be kept clean. The economy of keeping all kinds of cutters sharp cannot be too strongly urged. A workman seldom wastes a cutter by too frequent grinding, but a cutter rapidly wastes away if a workman tries to use it when dull. When a workman tries to cut with a dull cutter, he is abusing the cutter rather than using it.

The compound swivel head is useful for recutting and sharpening end and hollow mills, and for sharpening fine tooth mills, angular and side milling cutters. Its adaptability for grinding angular cutters arises from its angular adjustments in relation to the main guide bar.

The compound swivel head, Figs. 2050 to 2058, has three swivel adjustments, so that work can be moved in different directions past the wheel. By means of the clamp C', Fig. 2050, the head is held upon the main guide bar A, which forms one of the swivels. By means of the swivel J, Fig. 2052, the slide S is held to the clamp.

The swivel head is carried by the slide S. The taper shank, mill bushings, and the side milling cutter arbor are held in the swivel head G. Other bushings and arbors for holding straddle mills, face mills, etc., can be fitted to the head. The tooth rest is shown at Z, Fig. 2051. Adjustable slide stops are on the rod under the slide. The slide is moved by the handle H. The notched connecting rod N allows the handle H to be placed in any convenient position.

Fig. 2053 shows the head adjusted to recut a left-hand end mill. A movable arm is provided that can be used for a stop to the main bar A, both in end movement and in keeping the head at the right height. The head is set to bring the mill considerably above the centre of the wheel; the depth of the cut can be varied by changing the height of the mill. The tooth rest Z, Fig. 2051, is adjusted so that the tooth that rests against it will be parallel to the slide S; then the slide S is adjusted, by means of the swivel, so that the zero will coincide with the figure on the dial corresponding to the number of teeth in the mill or cutter, which brings the tooth face parallel to the side of the emery wheel. The top of the boss *g*, Fig. 2053, is central with the hole in the swivel head and can be used as a gauge to set the tooth rest.

The wheel cuts in the space *f*, Fig. 2053, as the slide is moved by the handle *h*. The slide is shown in position for changing the mill to recut the next tooth. To sharpen the teeth the head is lowered so that the tooth which bears against the tooth rest will be ground to give a clearance of about two degrees. It is well to have the end teeth a little hollowing, letting them be .001 inch or .002 inch lower near the centre than at the outside; this can be done by setting the swivel about one-quarter of a degree away from 90 degrees.

In Fig. 2052 the emery wheel is put on with its flat side toward the spindle, the head is swung in the opposite direction to that in grinding a left-hand mill, and is moved nearer the machine in order that the mill may move toward the wheel from the other side.

In Figs. 2051 and 2052 it will be noticed that the wheel does not sharpen the teeth by grinding square across their edges, but, being slanting with the edge of the tooth that is being ground, it passes somewhat between the teeth rather than over them. This feature of the compound swivel head gives it an adaptability for sharpening finer toothed mills or cutters than can be sharpened with the wheel moving square across the edge of the teeth.

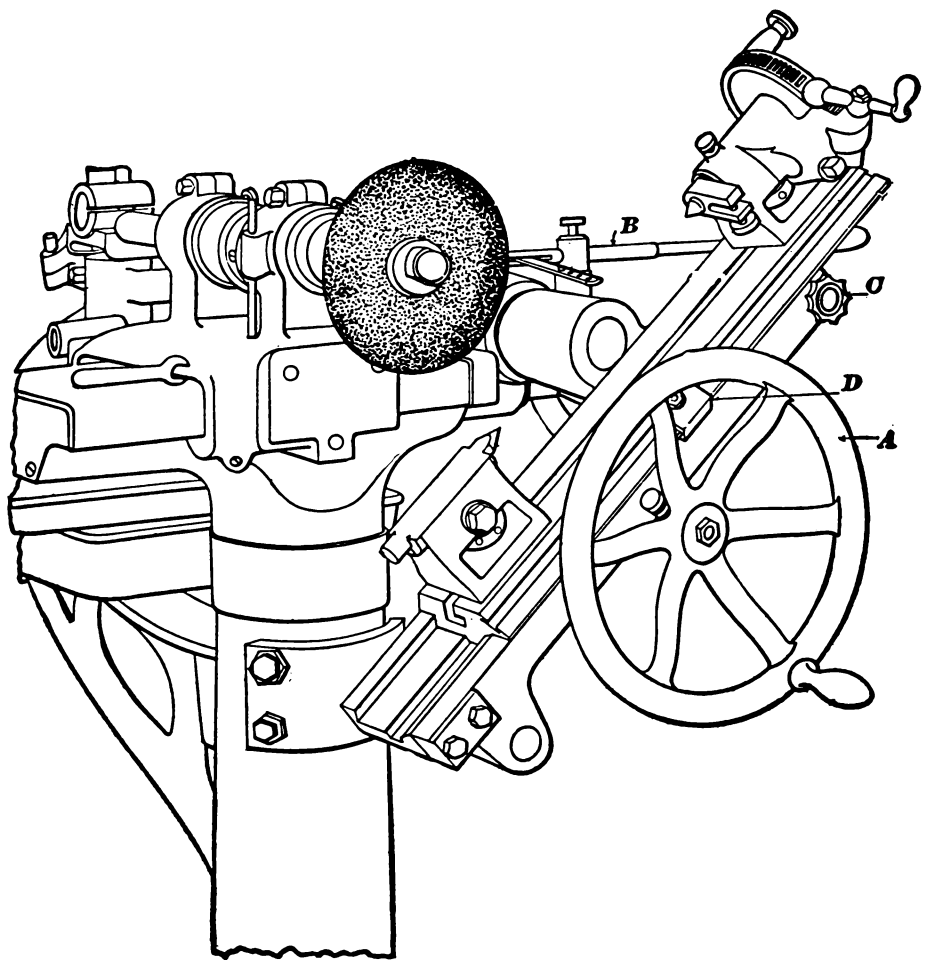

Fig. 2059.

Figs. 2054 and 2055 show the compound swivel head adjusted to grind a right-hand angular mill, and Fig. 2056 shows the head in position to grind a left-hand angular mill. In grinding angular cutters, as shown in Figs. 2055 and 2056, care should be taken in setting the tooth rest on boss *g*, shown in Fig. 2053, as any variation above or below the centre line of the tooth will change the angle of the cutter. The face teeth of angular cutters are ground in the same manner as the end teeth of shank or end mills and the side teeth of side milling cutters.

The operation of setting up to grind the side teeth of side milling cutters, as shown in Figs. 2057 and 2058, is the same as described in connection with Figs. 2051 and 2052, except that in the case of side mills of large diameter, where the space between the teeth is sufficient, the head need not be set to the number of teeth, but at any convenient angle that will allow the wheel to clear the next tooth to the one being ground. Care should be taken, when the teeth are close together, to avoid grinding two teeth at once, as the clearance on one of them would be in the wrong direction.

To remove the work after grinding, loosen the clamp screw V, Fig. 2050, that holds the main bar in place on the spindle head, keeping tight the clamp screw C′, Fig. 2050. Then raise the compound swivel head to an upright position, and retighten clamp screw V to hold it in place. After changing the work, loosen the clamp, lower the head to first position, and proceed as before. To facilitate raising the head to examine work, and insure its returning to the same position, care should be taken to keep the limiting arm against the end of the main bar journal.

FORMED CUTTER GRINDING ATTACHMENT, Fig. 2059.—This attachment is new in design and is so constructed that it can be readily detached from the machine. It is held rigidly in place by a clamp screw.

A bed is rigidly attached to the main bar and carries the sliding table, as shown in cut. The sliding table is provided with a pair of index centres, between which the work to be ground is held. It is also provided with a dust guard, not shown in cut, to prevent dust and emery grit from accumulating on the ways of the bed. The reciprocating movement of the table is obtained by the operation of the hand wheel A, which moves a pinion meshing into a rack on the bottom of the table.

The side adjustment is controlled by the lever B, and the adjustment to various sizes of work and wheels is obtained by moving the spindle head forward or back, as may be found necessary. By the use of the clamp C the table can be locked in any position while changing work.

The adjustable stop D prevents the emery wheel from injuring the index head when the table is being moved downward.

The centres will swing work to 4¾ inches diameter, and take 10 inches in length. By means of raising blocks, formed cutters to 8 inches in diameter can be ground.

The grooves in taps and the faces of reamer teeth can be ground by the use of this attachment, and by removing the index centres and substituting a vice or other fixture, light surface grinding can easily be done.

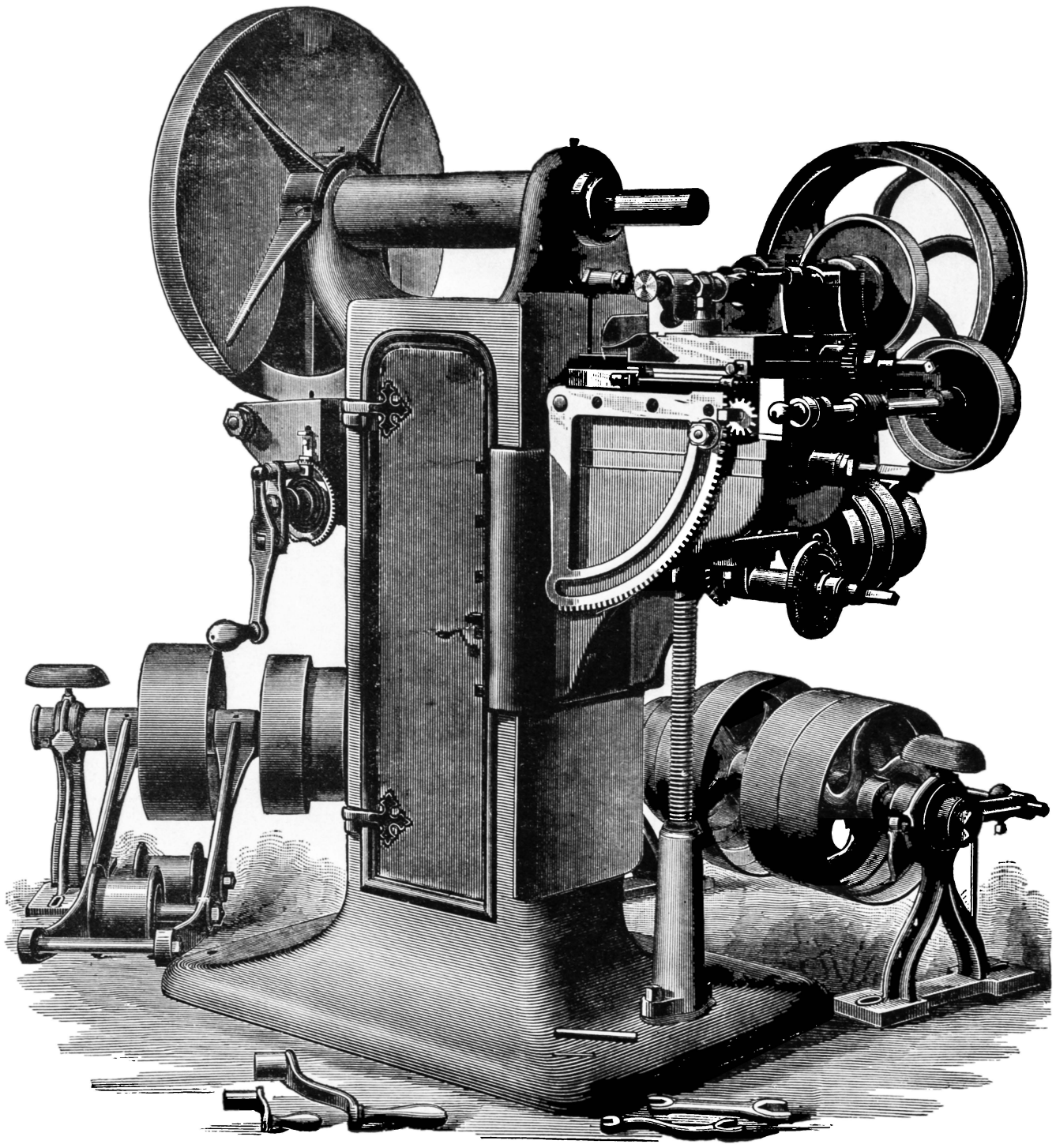

Fig. 2060.

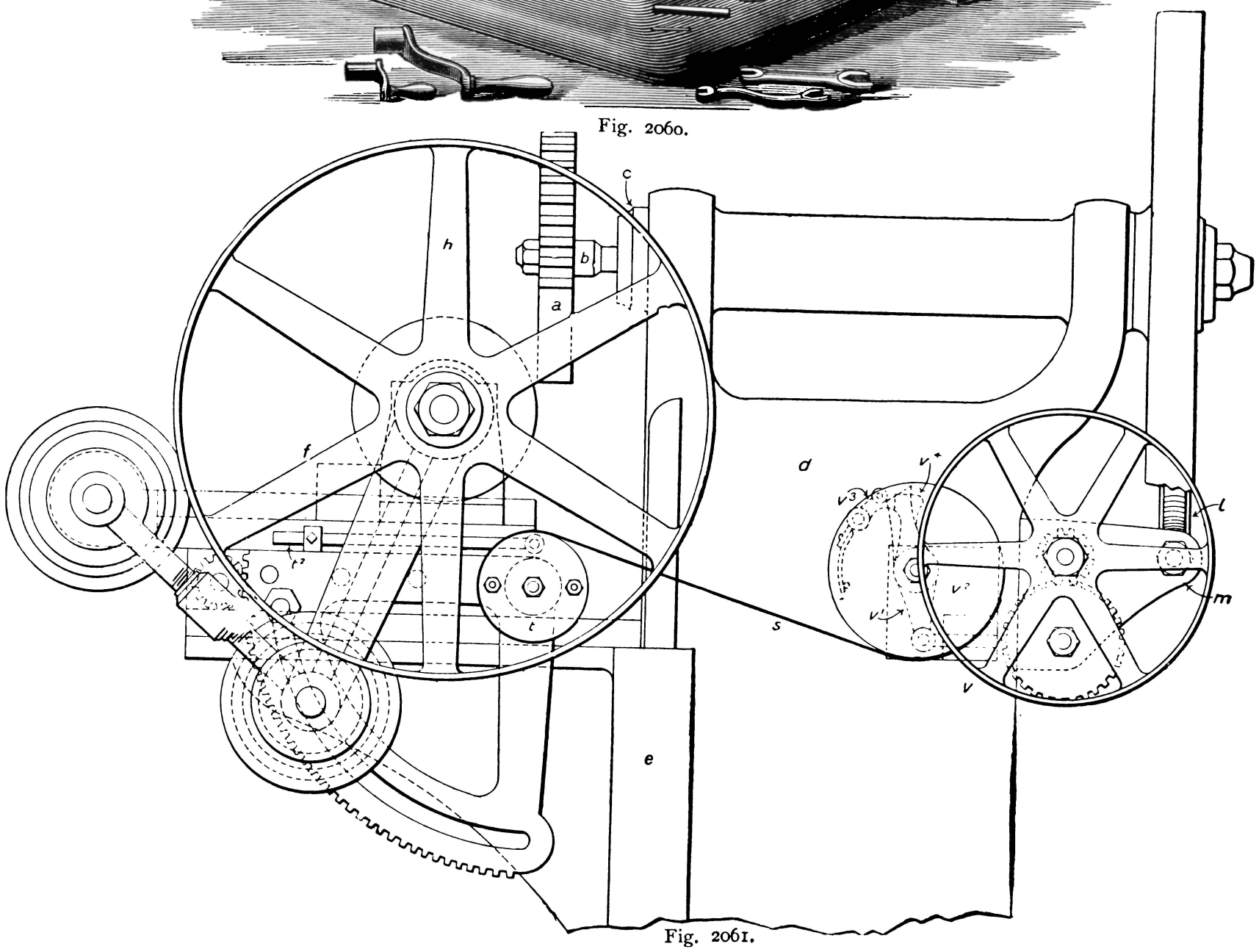

Fig. 2061.

Chapter XXIV.—GEAR-CUTTING MACHINES.

THE Brainard automatic gear cutter, Figs. 2060, 2061, 2062, and 2063, is arranged to cut spur, bevel, and worm-wheels, and is of that class where the manipulations required in gear cutting are all performed by the machine itself, thus dispensing with the care of an attendant except to place the wheels in position and set the machine for the proper depth and length of cut. The manner in which these results are accomplished will be seen from the following description, reference being had to the engravings. The wheel to be cut (*a*, Fig. 2061) is held upon a mandrel *b* fitted to the spindle *c*, which is mounted in firm bearings upon a column or standard *d*. To the face of the standard is gibbed a sliding knee *e*. Upon this knee is placed the cutter slide *f*, which is arranged to be inclined for bevel-gear cutting, and to be swung aside in cutting worm-wheels. Rotary cutters are carried

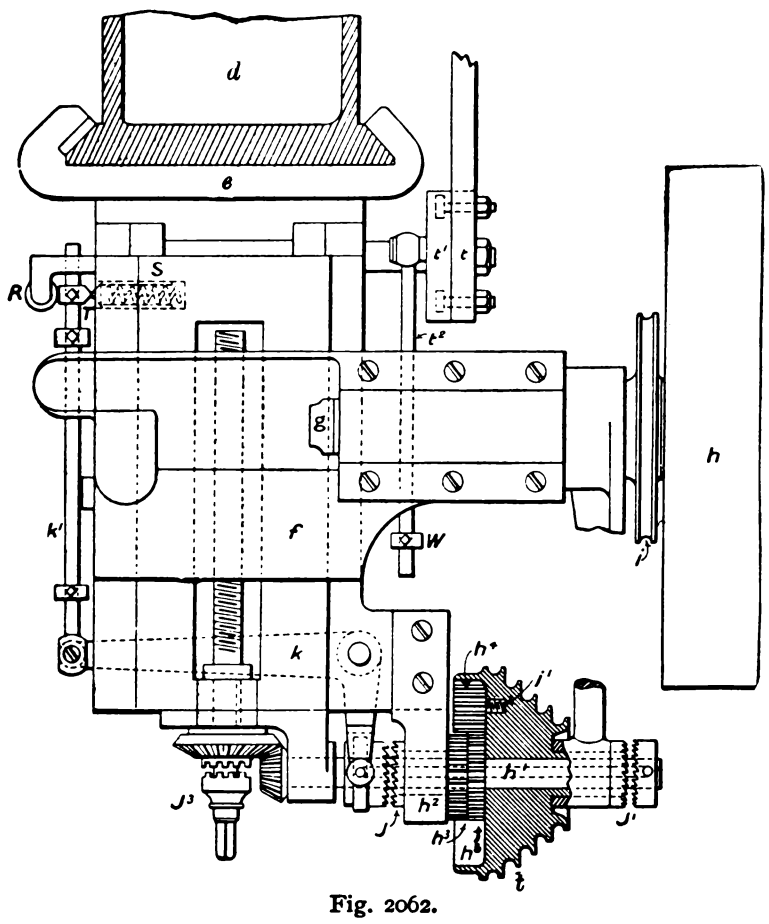

Fig. 2062.

on arbors fitted to the cutting spindle (*g*, Fig. 2062). Power for driving the cutter is applied to the pulley *h*, mounted upon the cutter spindle.

The cutter slide *f* is operated through the medium of a screw and bevel-gears from a shaft h^1, which is arranged to revolve alternately in opposite directions from a continuous motion of the driving cone pulley *t*, receiving motion from the feed pulley *i*, through the means of a swinging arm, carrying a receiving pulley and cone as is shown in Fig. 2060.

The method of obtaining these opposite motions of the shaft h^1 will be seen in Fig. 2062. To the block h^2 which supports the shaft h^1 is secured a gear h^3, which engages with a pinion h^4 mounted loosely on the cone pulley i^1. Side by side with this gear is placed a second gear h^5 also engaging with the pinion h^4 and having one tooth less than the gear h^3. This gear is mounted loosely on the shaft h^1 and is sleeved through the block h^2, and to it is secured a ratchet clutch *j*.

This arrangement produces a motion analogous to that of worm gearing; the revolution of the cone i^1 carrying the pinion h^4, causes the gear h^5 to be moved in the opposite direction to that of the cone i^1, and at a speed of one tooth for each revolution of the cone. The cone i^1 carries on its outer end a second clutch j^1. The shaft h^1 is made hollow, and two clutches are secured to a rod playing loosely on the hollow shaft, and arranged to be engaged alternately with the clutches *j* and j^1. This engagement is effected by means of a bell crank *k*, operated by a shipper rod k^1 on which adjustable dogs are placed, arranged to be operated by the cutter slide *f*.

This arrangement of feed shipping motion is very positive in its action, and allows of a very quick return of the cutter slide. The parts are so proportioned that the slide returns thirty-three times as fast as the forward motion, and yet on the very fastest speeds there is no perceptible jar of the parts. The entire mechanism can be disconnected from the feed screw, when desired, by disengaging the clutch j^3 on the feed screw. The means employed for spacing the wheel blank are shown in Figs. 2061 and 2063. At the rear end of the spindle *c* is secured a worm-wheel *l*. This worm-wheel is made in two parts screwed firmly together. By this construction the wheel is made very accurately. The screw holes in the ring l^1 are slightly elliptic. After the wheel has been hobbed out the position of the ring is changed and the wheel re-hobbed, and so on until the teeth will match perfectly in any position of the ring, when the ring is pinned and screwed on permanently. This wheel is driven by a worm *m* in connection with change gearing m^1, m^2, in such a way that one turn of the shaft m^3 serves for all divisions. To the shaft m^3 is secured a graduated plate *o*, to which is secured a latch plate o^1 by means of a T-slot and bolts. The latch plate o^1 is secured in this manner in order that the plate *o* may be turned any desired amount of "set over" in bevel-gear cutting, without disturbing the change gearing or latch. This dividing mechanism is driven by an independent belt from the countershaft to the pulley P, which is secured to a pinion P^1, running loose on a stud. The pinion P^1 engages with a gear P^2 mounted loosely on the shaft m^3. This gear is made to drive the latch plate o^1 at the proper time by means of friction plates, which are set to the required tension by check nuts. The latch plate o^1 is held by a spring latch *v*, which is secured to an arm v^1 mounted loosely on a stud. The arm v^1 is moved by a disk v^2 carrying a secondary latch v^3. This secondary latch v^3 has on one side a roll which engages with a fixed cam v^4, which trips the latch v^3 from its connection with the arm v^1, thus allowing the spring on the latch *v* to return it to its seat in the latch plate o^1.

The disk v^2 is moved by a steel ribbon (S, Fig. 2061) which is connected to a pair of plates, t t^1, held together by a T-slot and bolts, and mounted loosely upon the carriage which carries the cutter slide *f*. The object of the double plates is to take up the slack ribbon, in any required position of the carriage, on the knee *e*. To the inside plate t^1 is connected a shipper rod t^2, which carries a dog and is operated by the return motion of the cutter slide *f*. A spiral spring coiled on the stud supporting the disk v^2 returns the disk to its original position on the forward motion of the cutter slide *f*, and reseats the secondary latch v^3 in its seat in the arm v^1. This arrangement of dividing mechanism requiring but one turn of the shaft m^3 possesses some very decided advantages over the ordinary way of simple gearing and multiplied turns. The latch *v* is tripped immediately after leaving its seat in the plate o^1, and is returned by its spring against the periphery of the plate, and is surely seated by means of a lip on the upper side of the plate. Should it, however, fail by reason of

any accident no harm will be done as the gear will be correctly spaced whenever the latch is seated, only one or more spaces will have been missed. Another advantage is that the feed gear can be disconnected and the latch withdrawn, thus allowing the gear to be revolved for the purpose of examination without any necessity for remembering the exact number of turns. When the latch is again seated the gear will be always properly spaced.

Fig. 2064 represents the same machine made half automatic, or in other words the feed is automatic, but when the cut is through, the worm that actuates the feed is thrown out of gear by a catch which lets the box or bearing at the left hand of the worm shaft drop vertically, this catch being operated by a stop on the side of the cutter slide. The method of arranging the feed mechanism so that it shall remain undisturbed, and require no alteration or adjustment at whatever height the knee carrying the cutter slide may be, is substantially the same as that already described with reference to the universal milling machine in Fig. 1893, while the dividing mechanism and other general features are the same as in the full automatic, with the exception of the mechanism for operating the cutter during the return stroke, and which may be longer than would be practical if it stood upright.

Fig. 2066 represents a gear planing machine, shown with a bevel-gear in place. The main spindle is horizontal upon a fixed head, and has its dividing mechanism at the back of the machine. A single pointed tool is used in a slide rest, operated (by crank motion) upon the horizontal slideway shown, which may be set at any required angle for bevel-wheels. The cut is carried from the point to the flank of the tooth, and is put on by a rod and ratchet motion, the rod striking against the stop seen beneath the cross slide for the slide rest, and on the side of the horizontal slideway.

Figs. 2067, 2068, 2069, 2070, 2071, 2072, and 2073 represent different views of a gear-cutting machine, which consists of a bed plate A A, Figs. 2068, 2069, and 2070, having an extension at end A^2, to support the hollow cylindrical column A^3, which carries an overhead shaft a, at one end of which is a four-step cone a^3, for driving the cutter feed motions. At the other end are the tight and loose pulleys for driving this shaft, upon which is also a series of grooved pulleys a^5, arranged in the form of a cone. The object of this is to drive the cutter. At the base of the column A^3 is a

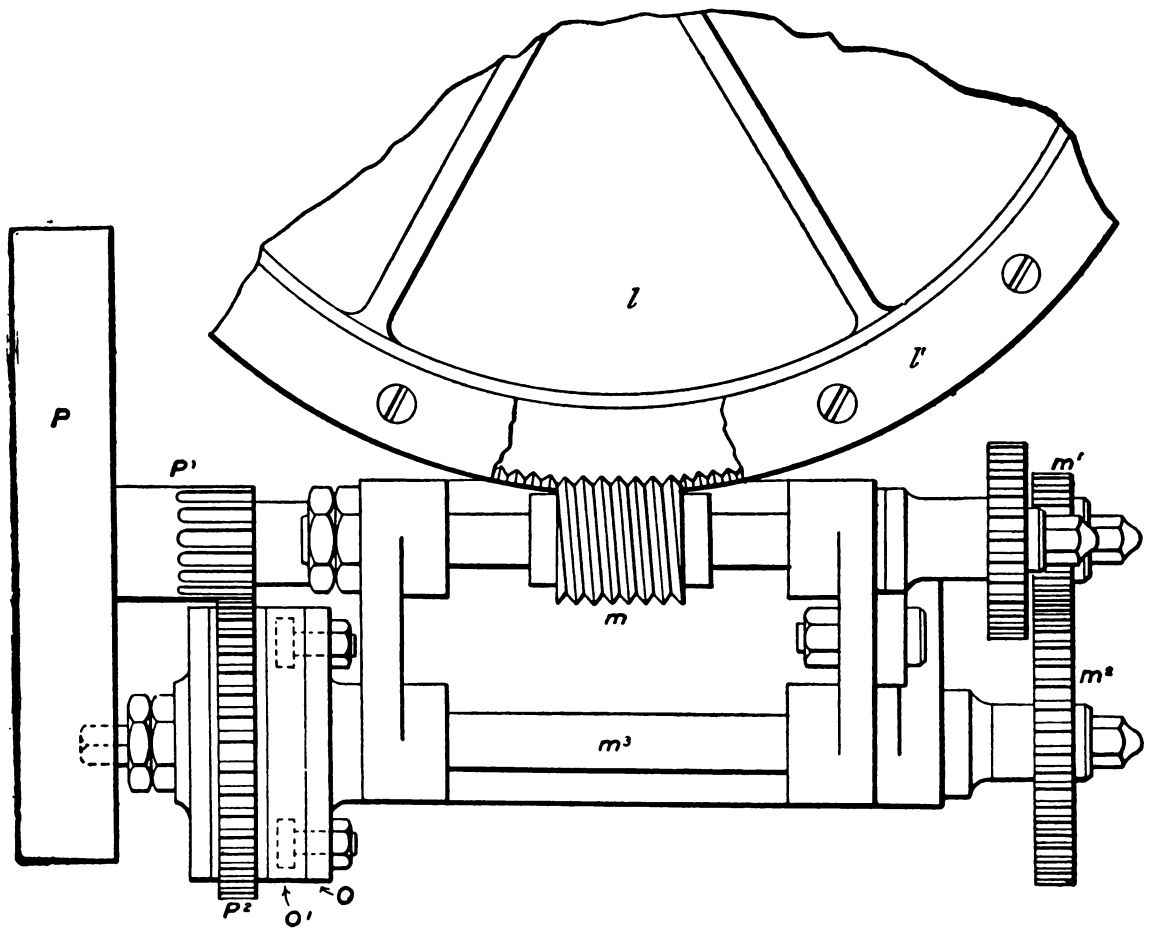

Fig. 2063.

operating the dividing mechanism, both of which operations are done by hand in the half-automatic machine.

Fig. 2065 represents a Whitworth machine in which the cutter is carried in a vertical spindle carried in a sliding head. A is the driving pulley, B a pair of bevel-gears, and C a pinion driving the cutter spindle D, the cutter being at E. The cutter spindle has journal bearing at each end in arms upon the sliding head F, which is operated along the slideway of H by the gear-wheel G, receiving motion from the worm at C; at K is the index wheel, the wheel to be cut being carried on its shaft at M. The head N, carrying the index-wheel shaft, may be moved along the bed on which it slides by the handle P, which operates a screw within the bed, and engaging a nut on the under side of N. The worm for the worm-wheel K is carried beneath the wheel by a bracket from N, and being on a splined shaft moves with N. I is the handle for the divisions, the latter being obtained by means of change wheels at J, which connect with the worm shaft. By employing change gears the handle P makes a complete turn for any division, and is locked in a recess, which determines when an exact turn has been made. The range of a machine of this design is very great, because of the length of the bed on which the head N slides, corresponding series of grooved pulleys, also arranged in the form of a cone a^6. A round belt is employed. The shaft on which a^6 is placed extends across the column, and on its opposite end a grooved pulley is also placed. This serves to drive a belt which, passing over a series of idle pulleys, as will be seen by reference to Figs. 2067 and 2068, drives the rotary cutter.

The wheel to be cut is carried as follows: Upon the bed-plate of the machine is placed a head B, Fig. 2069, corresponding to the headstock of a lathe, opposite which is a head B', answering to the tailstock of a lathe. Two bearings on B carry a mandrel D, which carries a face-plate D' against which the work is chucked. At the end of D'' is fixed, in the usual manner, the worm-wheel for the dividing mechanism. The cutting arbor is held in a head that is carried in a cross slide C^2, Fig. 2068, this cross slide being a carriage that may be fed along the side extension of the bed, which is broken off in the plan view of the machine, Fig. 2069. The two slides thus provided in this machine form in effect a longitudinal and cross feed, answering to the feeds of a lathe carriage and tool rest.

The cutter head M, Fig. 2068, is composed of two parts, C and M. The cutter head M carries the cutter arbor c'. Provision is

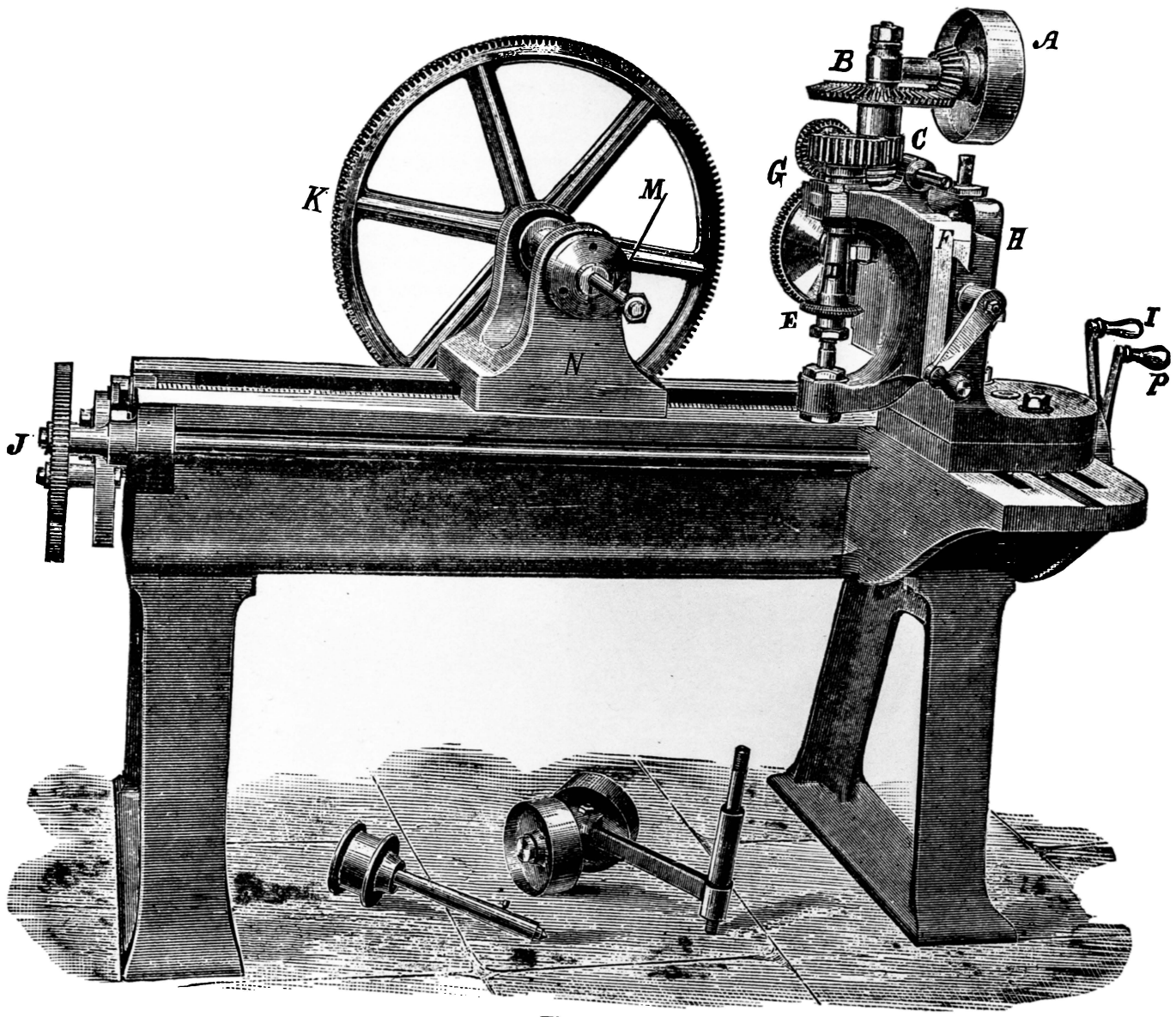

Fig. 2065.

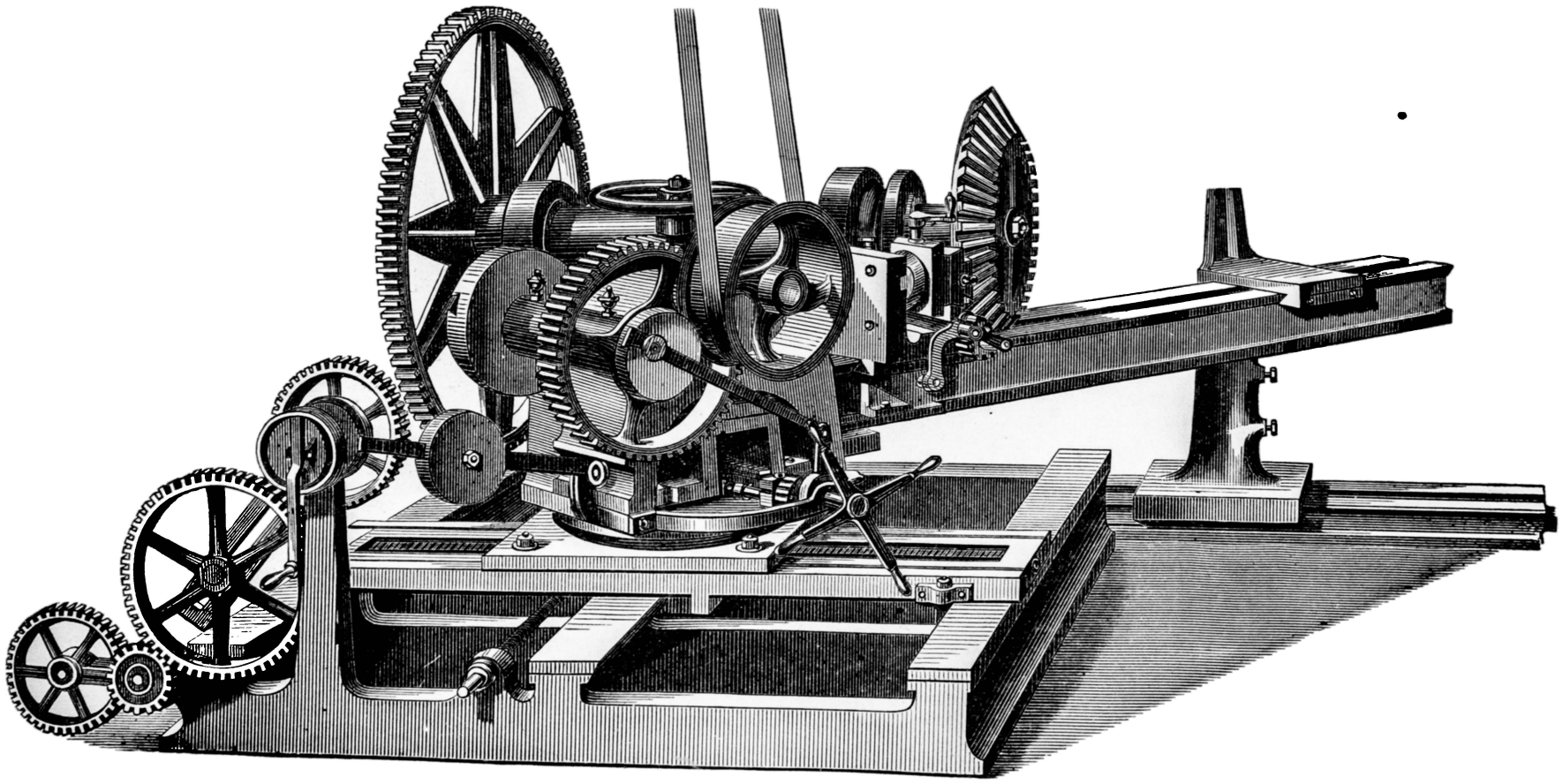

Fig. 2066.

made to swing the arbor in the two directions, noted by the plain and feathered arrows. Between the two the cutter arbor, it will be perceived, may be set at an angle in whatever direction the nature of the work may require. Referring to Figs. 2067 and 2068, it will be seen that the cutter-driver mechanism operates as follows: The tight pulley a^1, driven in the direction noted by the arrow, turns the cone a^6 which drives the pulley b. The belt from b passes over grooved idlers, b^1, b^2, b^3, &c., to the grooved pulley b^8, which is fast on its shaft and drives a train of gearing that operates the cutter arbor, the train being best shown in Fig. 2068. The train of gearing thus driven is composed of gears c^1, c^2 and c^5, the latter being on the cutter arbor. The object of this arrangement is to obtain a high belt velocity. It will be seen that all these gears have their teeth at an angle to their axes, a feature that has been introduced to obtain smoothness of action. To maintain equal tension of belt at whatever angle the cutter may be set, the idle pulley b^2 acts as a belt tightener, being carried by the rods t and t^1.

Referring now to the feed motions, the machine is provided with a quick return for the cutter, the mechanism of which is as follows: The cone pulley a^4, Fig. 2068, is mounted upon a driver shaft d, Fig. 2070. Upon this shaft are two loose bevelled pinions d^2 d^4, between which, and splined to the shaft, is a clutch f. For the feed traverse the clutch f is moved to engage with the pinion D^4, while for the quick return it engages with d^2. This device corresponds to the old-style quick-return motion used in some of the heavy English planing machines. The clutch f is operated by a rod l', and drives the bevelled pinions d^2 d^4 by friction. The hub of the clutch is coned to fit a coned recess in the hubs of the two pinions. A pair of gears, d^6 d^7, transmit the motion of d^5 to the shaft d^1, on the end of which is the pinion e'. Motion is conveyed from this pinion to the feed-screw e, Fig. 2072, by the intermediate gears e^2, e^3, e^4, and e^5, and also by the helical pinions e^6 and e^7, the latter (e^7) being also shown in Fig. 2072.

Referring to the dividing mechanism, E, Fig. 2068, is an index-wheel operated by a worm. E^1 is an arm with a locking tongue. Motion from E is conveyed to the shaft g through a swing-frame, shown in dotted lines in Fig. 2068, and a train of gears g^2, g^3, g^4, g^5, g^6. On shaft g, Fig. 2069, is a pair of angular-toothed beveled pinions, h^1 h^2, and on shaft h, Fig. 2071, is a pinion h^3, driving a pinion h^4, which in turn drives pinions i i^1. The latter drive the worm H' which operates the wheel H. The two shafts carrying i i^1 are supported by a piece F, the arm of which appears in section. This is fixed on the large toothed wheel G, indicated by the dotted lines in the same figure. The piece F above referred to is not fully shown in the engraving, portions of it having been omitted in order to show the mechanism previously mentioned. The wheel H is mounted on shaft D'', and is used to revolve the face plate D', all as shown in Fig. 2069. The wheels g^2 g^3 are change wheels, whose relative diameters determine the number of turns the wheel E must make for a given pitch. The arm E^1, Fig. 2068, is provided with a spring to hold

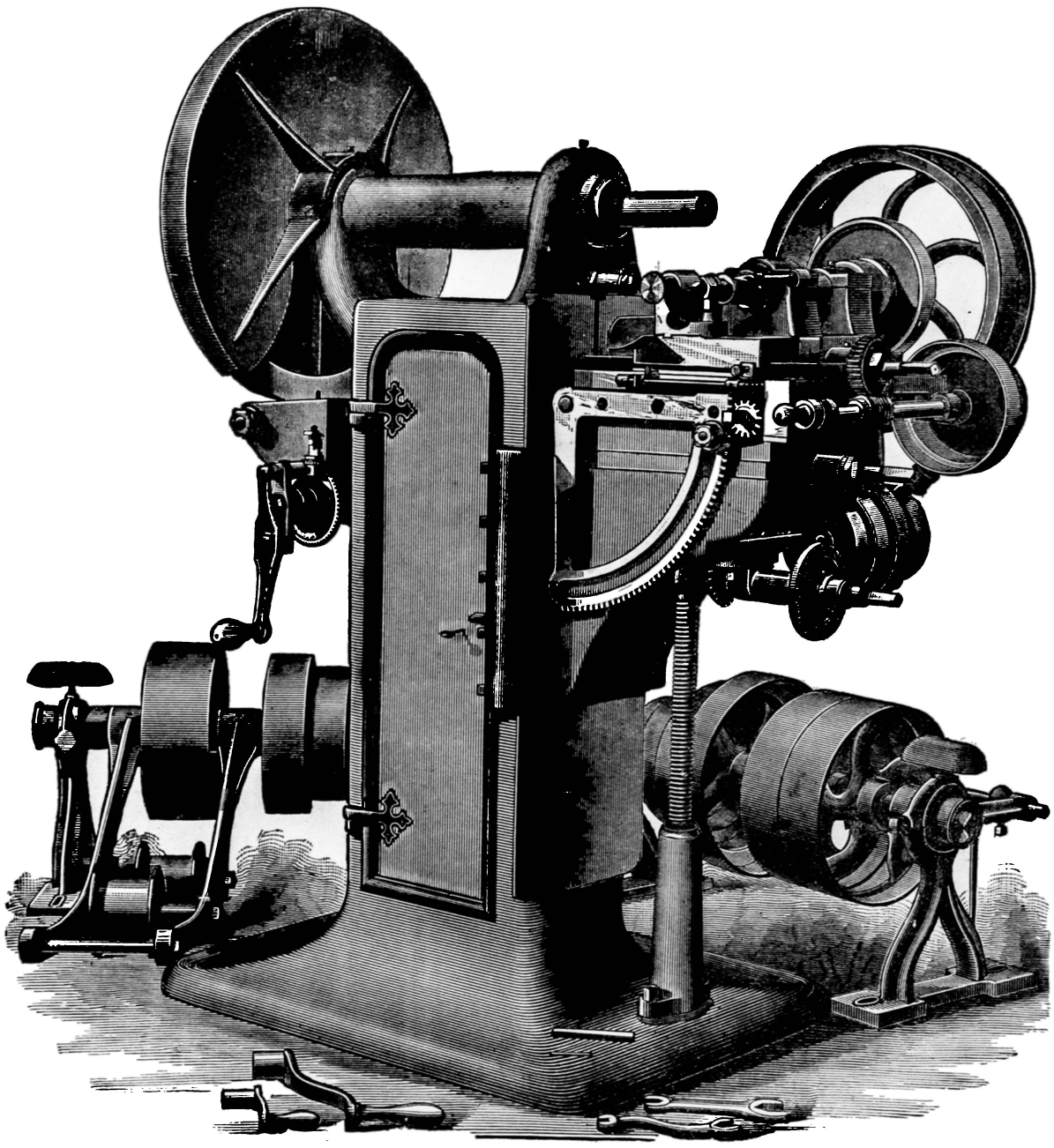

Fig. 2064.

the index pin into the notch of the index wheel. From this description it is obvious that when the number of the teeth of the wheel to be cut is a multiple of that of the wheel H, the number of turns to be given to the tangent screw H′, Fig. 2071, is exactly determined by the ratio existing between these two numbers. On the other hand, where the number of teeth required is not a multiple of the teeth in the wheel H, the number of turns to be given to the screw will be equal to *n* plus a fraction. In the first case, if all the intermediate gears between the dividing apparatus and the tangent screw are arranged to transmit to the former a number of definite turns, it will suffice to make the crank describe the number of turns indicated by the ratio the wheel E bears to the worm-wheel. In the second case, in order to give the tangent screw *n* turns plus a fraction by giving the crank *n* + turns, it is necessary to employ several wheels, for which the ratio must be calculated. If the division so obtained is not an exact divisor of the number of teeth of the wheel H, it is necessary that one of the wheels forming the combination shall have a number of teeth which is a multiple of the division mentioned.

Another consideration with reference to the number of turns to be given to the crank of the dividing apparatus is mentioned in the inventor's description of this machine. The smaller the number the greater will be the chance of error in the result; for example, if it be supposed that a division corresponding to one turn of the tangent screw is to be made, if only one turn of the crank is made, the play unavoidable where easy movement is secured will be repeated and multiplied in the same way that an error is produced after a certain number of divisions. If, on the contrary, the mechanism be arranged so that the number of turns of the crank is multiplied in obtaining one turn of the tangent screw, the error will be appreciably reduced. It is therefore recommended by the designer of this machine to arrange the train of gears so as to give a certain number of full turns to the crank in all cases. If, after having cut the teeth in the blank, it is desirable to go over them again, it is simply necessary to turn the screw j which engages with the gear-wheel J^1.

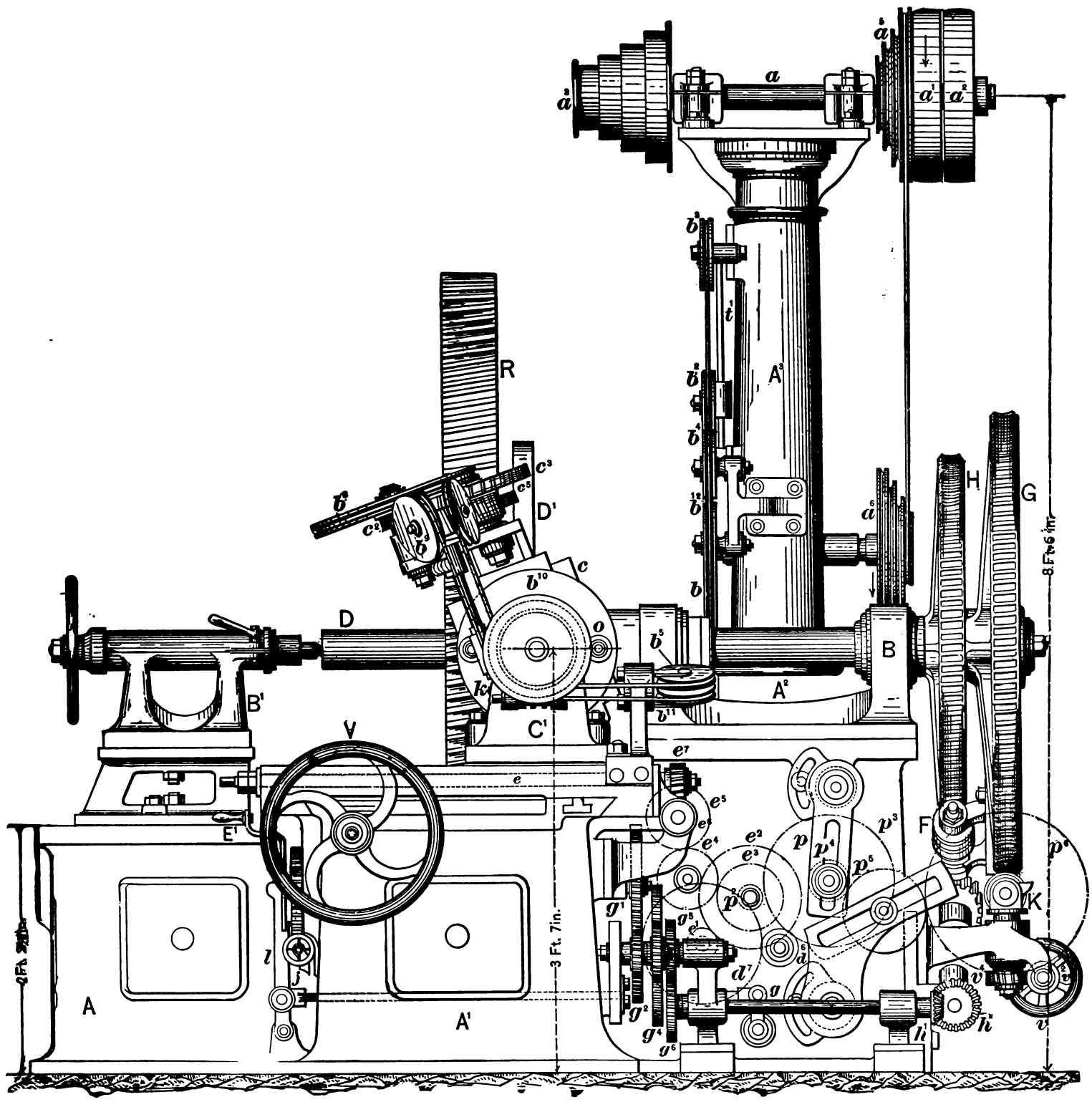

Fig. 2067.

The next feature to be described is the adjustment of the cutter. In some cases it is necessary to incline the cutter in such a way that the axis of the shaft carrying it forms a certain angle with the vertical. This is the case in cutting angle teeth, as shown in Fig. 2067. In order to produce the necessary angle for such teeth, it is only necessary to turn the worm *k* that engages with the worm-wheel k^1, Fig. 2068. This wheel is fast on to the piece M, and the latter, when set to the desired inclination, is kept in place by means of bolts O, Figs. 2068 and 2072. In some cases it is necessary to incline the cutter in such a way that the

axis of the shaft that carries it does not cease to be in a vertical plane perpendicular to the shaft D, this being the case as illustrated in Fig. 2073. In order to obtain this obliquity the small shaft m is turned, and the movement so obtained is transmitted by means of two small pinions m^2 m^3 to the shaft carrying at its extremity the screw n'. This screw gears with the segment n''. The latter is fixed to a piece J, furnished with bearings for the reception of the shaft that drives the cutter spindle, which is adjusted endways by means of the nuts shown.

If it is desired to produce a wheel with angle teeth it is necessary, after having arranged the cutter as shown in Fig. 2067, and not turn, nor does the second pinion h^4, which slides on the former. The screw H' slightly turns the large wheel H, which, as previously mentioned, is mounted on the shaft D, Fig. 2069. When the special tooth operated upon is finished the movement is reversed by operating the lever l. The table and the wheel R, Fig. 2068, then move in the opposite direction. When the original position is reached by the cutter, the reversing lever is thrown out of gear; the handle E' is then used so as to effect the proper division, and the machine is again started.

As has been shown, only a small portion of the circumference of the wheel G is subjected to wear. In this way it would be

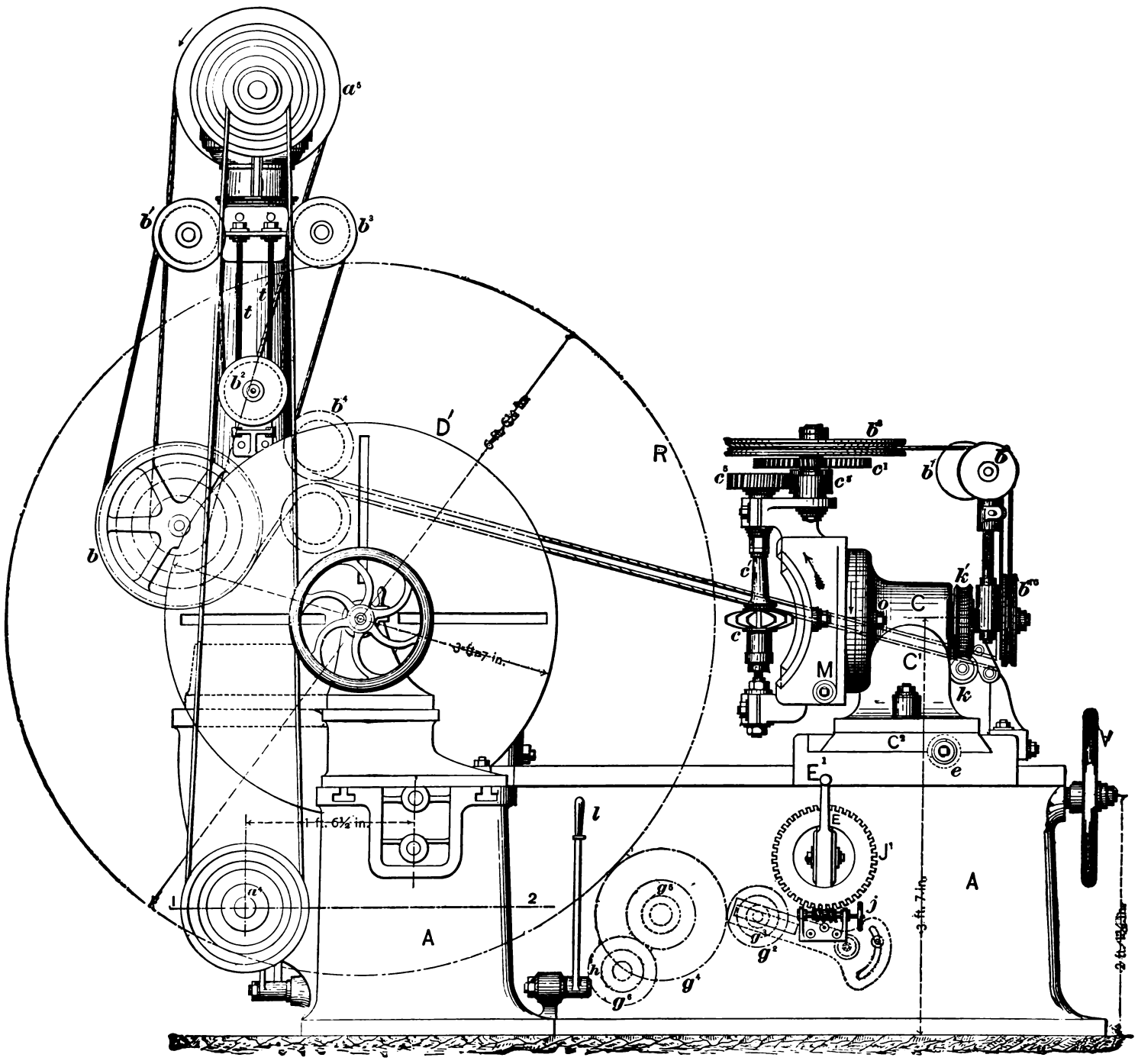

Fig. 2068.

while the forward motion of the carriage takes place, that the wheel R shall turn with a slow, regular movement until the tooth operated upon is finished. After this the tool retraces its path at a somewhat higher speed. This automatic motion is obtained from a shaft (Fig. 2067), on which are placed the pinions c^2 c^3. This shaft carries a third pinion p^2, which, by means of one or more pairs of wheels mounted two by two on a swinging frame p, as shown by p^3 p^4 p^5, turns the shaft p' (Fig. 2071), which carries at one of its extremities the wheel p^6 and at the other the screw h^3. This screw, by proper intermediates, operates the toothed wheel G, Fig 2071, which in its rotation carries along the piece F, with all the parts supported by it. In this movement the pinion h^3 does possible to limit the operation of cutting the teeth to a certain length of arc only. In that case, however, considerable wear would be produced; for this reason the constructor has preferred to provide the whole circumference with teeth, in order to change the working point from time to time, so as to distribute the wear. In order to permit this displacement it is necessary to disengage the worm K (Fig. 2067), which is accomplished by turning the hand wheel v, mounted on the shaft v', Fig. 2069. This shaft carries at each extremity small pinions, v^2, v^3, gearing with other pinions fixed at the extremity of each of the supports of the shaft p'

In order to make the operation of this machine better understood, we will conclude our description by some practical examples

of the calculations required in making helical teeth. It will be observed that the two small movements necessary in cutting an angle tooth in a given inclination are obtained first by the screw *e*, Fig. 2068, feeding the cutter head, and second by the tangent screw K, Fig. 2067, that governs the rotary motion of the wheel G, and consequently of the shaft D, carrying the face plate and the blank to be cut. The second wheel H, mounted on this shaft, is driven by the endless screw H′, Fig. 2071, the supports of which are fixed on the wheel G It will be observed at the same time that the speed of the screw *e* acting upon the tool holder is the same as that of the shaft carrying the wheels e^2 e^3 and p^2, since the wheels e^4 e^5 e^6 e^7 have the same number of teeth. It is obvious, therefore, that that ratio of speed which will exist between the tangent screw K and the shaft of wheels e^2 e^3 and p^2 will have to be the same as that between the driving screw *e* of the cutter head and the tangent screw K. Consequently, the combinations of wheels that connect

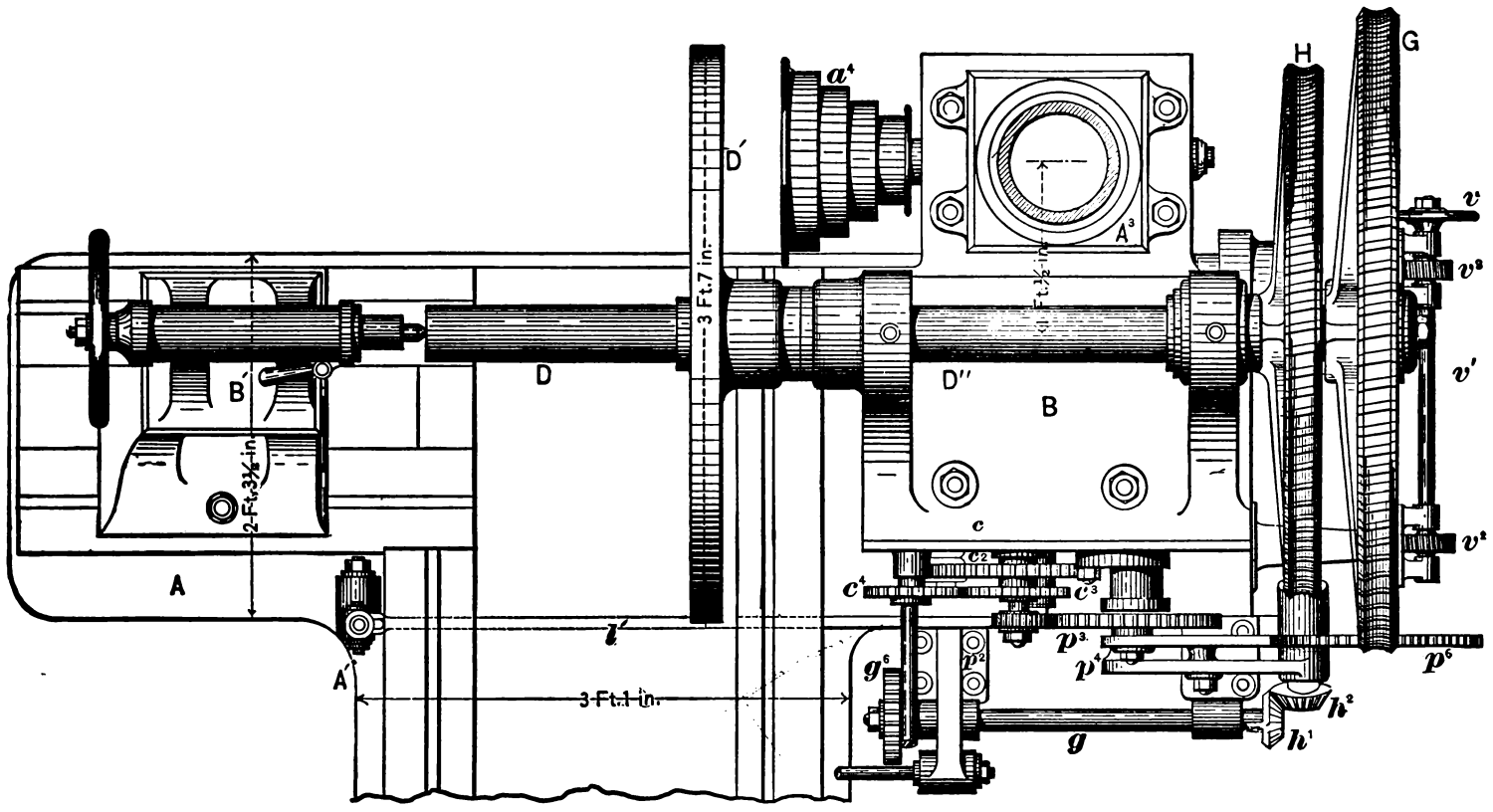

Fig. 2069.

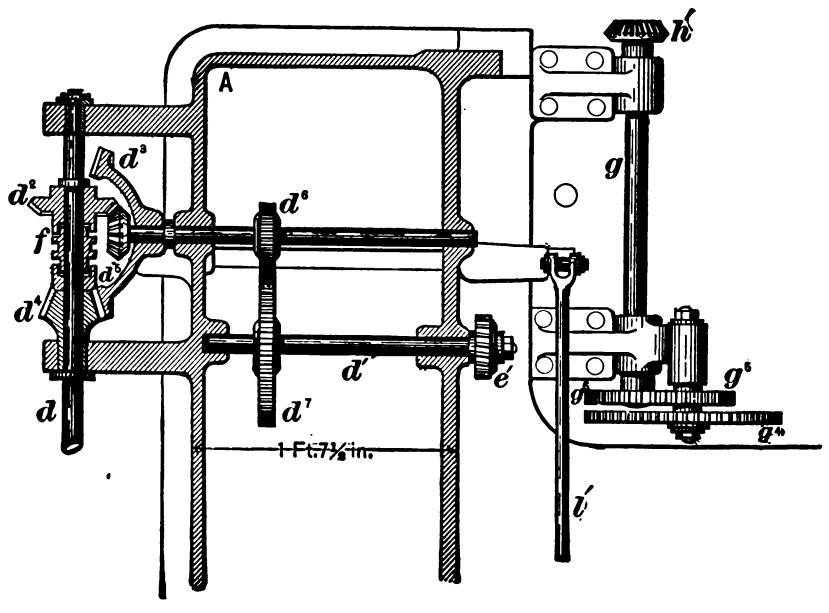

Fig. 2070.

this tangent screw K to the shaft e^2 e^3 and p^2 will produce the same effect as if they were connected directly with the feed screw *e*. This being established, the general formulæ determining the gearing to be employed in order to produce helical teeth inclined at a certain angle are obtained in the following manner: It should here be observed that the teeth produced will be what in the United States are called angle teeth, corresponding, however, so nearly to the helix as to be considered helical. Suppose that the number of teeth in the wheel G is 300, and that the pitch of the driving screw of the cutter head is 5 mm., using for convenience the French system of measurements. Let $\frac{x}{y}$ be the ratio of the four wheels that it is necessary to mount. Let M designate the degrees of inclination of the teeth. Let P equal the pitch of the desired helix, and D the diameter of the wheel to be operated upon. We then have cotan. $M = \frac{P}{D \times 3{\cdot}14}$, from which we find $P =$ cotan. $M \times D \times 3{\cdot}14$, and in order to make the cutter head

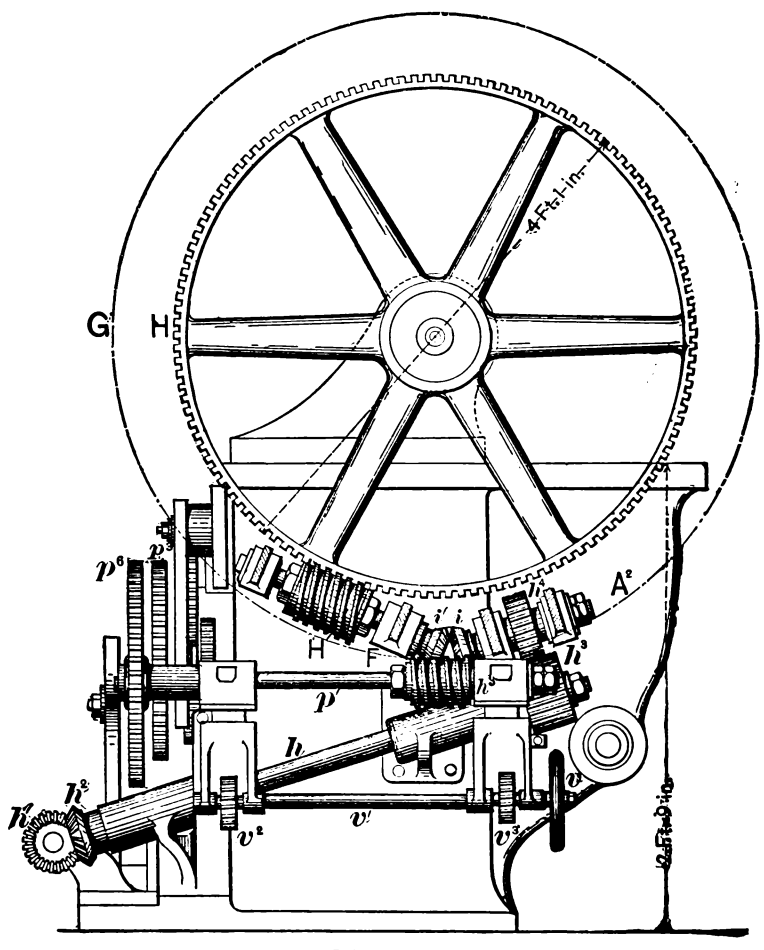

Fig. 2071.

run over a distance corresponding to this pitch, the driving screw *e* must make a number of turns equal to

$$\frac{\text{cotan. } M \times D \times 3{\cdot}141}{5}$$

But while the cutter head passes over a distance equal to the

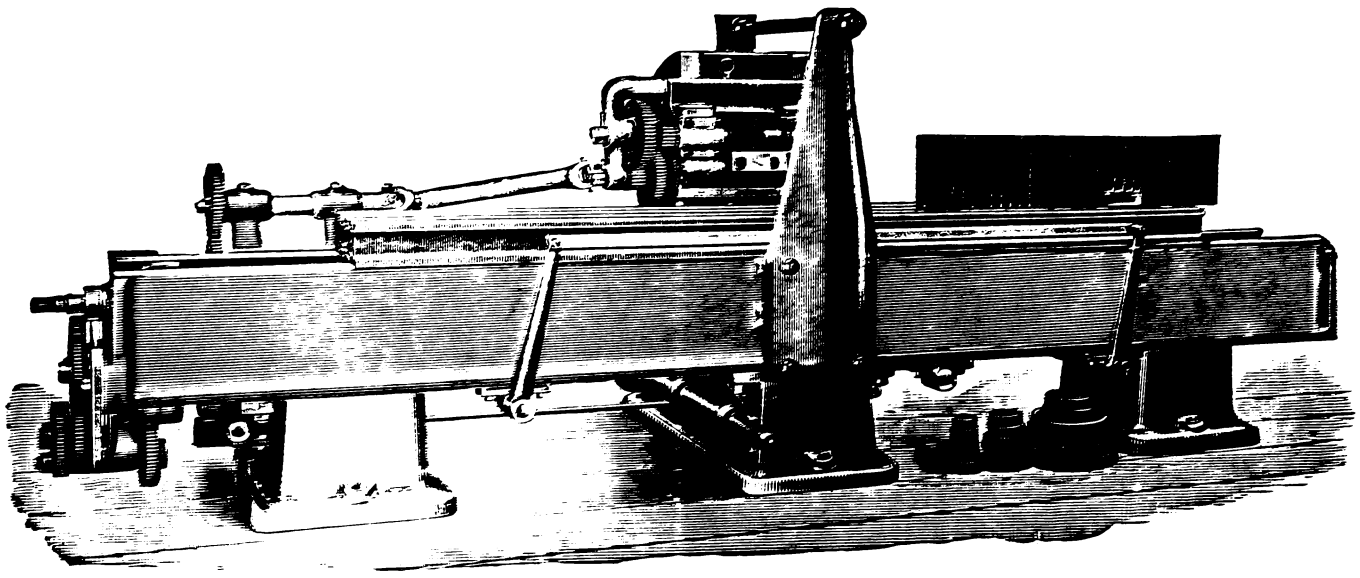

Fig. 1.

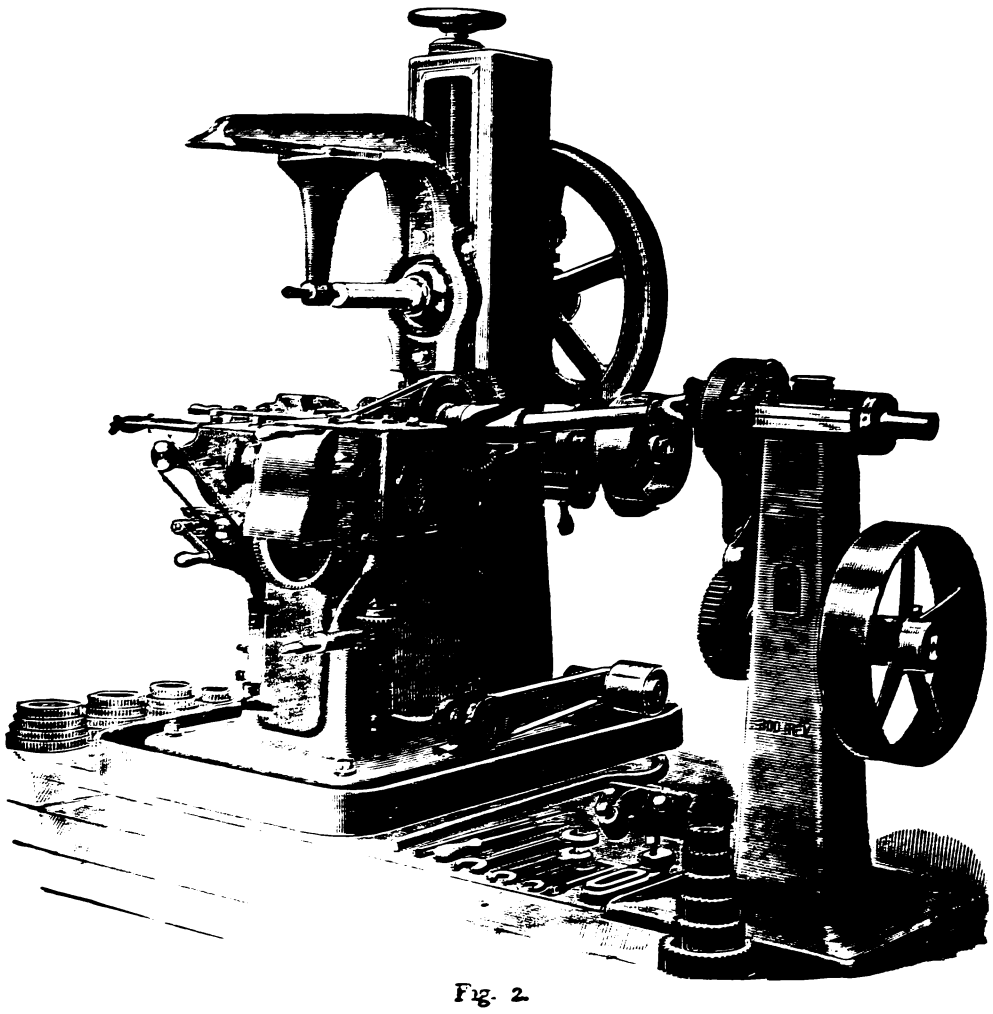

Fig. 2.

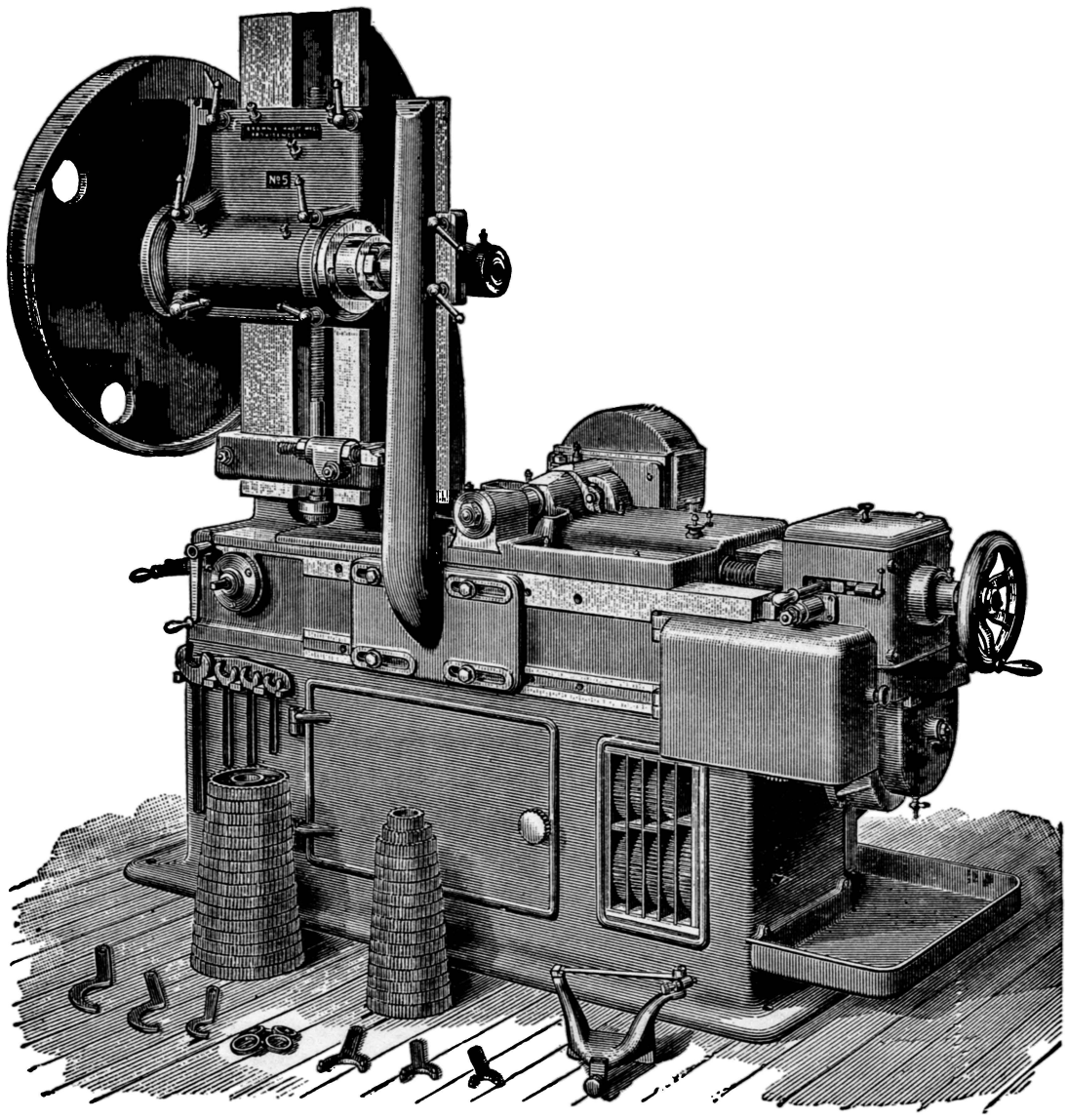

Fig. 2074.

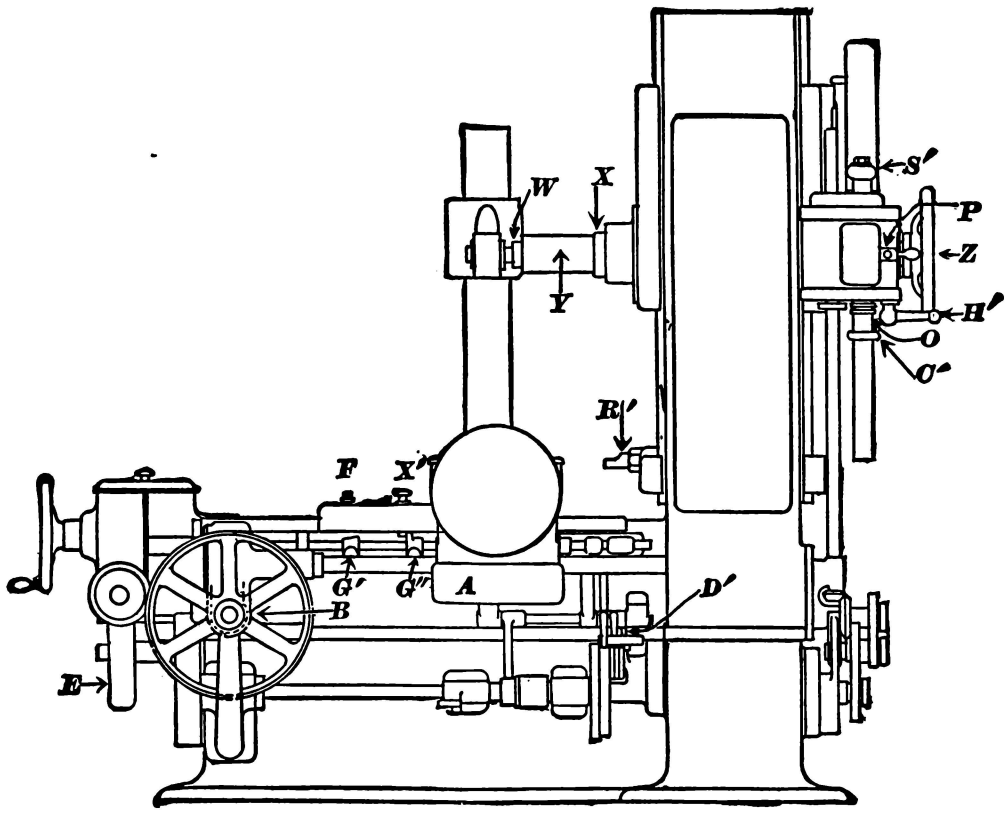

Fig. 2075.

pitch, the wheel G makes one turn and the tangent screw 300 turns; consequently, the ratio to be established between the speed of the tangent screw and that of the screw driving the carriage will be represented by

$$\frac{x}{y} = \frac{1500}{\text{cotan. } M \times D \times 3{\cdot}141}$$

Thus, for a wheel with a diameter of 1·75 inches, the machine ought to have an inclination of 15° to the primitive circumference,

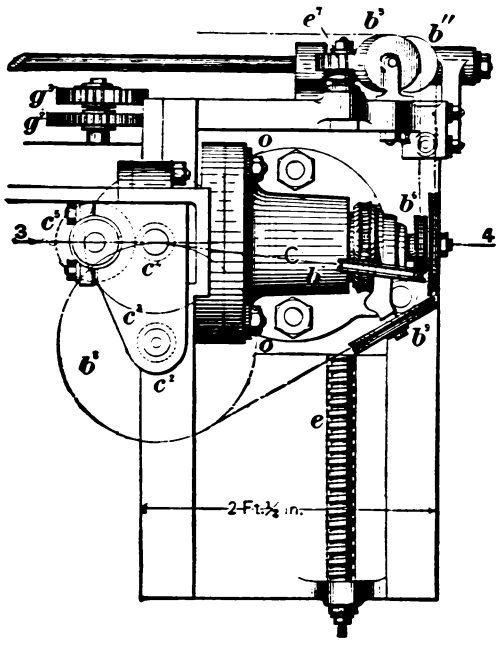

Fig. 2072.

and he would have, for the ratio to be established between the tangent screw and the driving screw,

$$\frac{x}{y} = \frac{1500}{\text{cotan. } 15^\circ \times 1{\cdot}75 \times 3{\cdot}141} = \frac{1500}{20{\cdot}51778}.$$

It should be remarked that, according as the angle should be either to right or to left, one or two intermediate pieces are placed on the swing-frame, the slide of which is nearly horizontal. The speed of the driving shaft, supported by the column mentioned in introductory remarks, is 120 revolutions; that of cutter equals from 20 to 30 revolutions; that of screw of cutter head, advance from 1 to 42 revolutions, return from 7 to 66 revolutions.

Fig. 1, Plate XIV.-B, represents a rack cutting machine, by Gould & Eberhardt.

The machine has capacity for cutting up a rack to ten inches face and to ten feet long at one setting, and up to three inch actual or linear pitch, using one to twelve cutters, according to the pitch being cut.

The machine may be said to consist essentially of a heavy bed, supported upon three pedestals, and having gibbed to its top a platen to which the work, or a vice for holding the work, is secured by means of T-slots. This platen is moved by means of a large screw, which passes from end to end of the bed, being driven by the gears which compose the spacing mechanism seen at the left. The spacing is done in much the same manner as on the gear cutting machines, viz., by a friction wheel, which a running pulley always tends to revolve, but which is allowed to revolve only at such times as the platen is to be moved for a space, a stop being then automatically removed, which allows the friction wheel to make just one revolution, when its motion is again arrested until a cut has been made and the cutter withdrawn; then another movement takes place, and so on to the completion of the job. Suitable gears are placed between the friction wheel and the screw, so that the single revolution of the former gives the proper amount of motion to the latter, whether it be only a fraction of a turn or several complete turns. The spacing may be changed from the diametral to the linear system by means of two change gears provided for the purpose, these gears being always in place ready for use.

The spindle is driven by means of gearing, motion being transmitted from the driving belt to the gears by means of the shaft having telescopic slides and universal joints, this shaft and the joints being so proportioned and run at such a speed as to give ample strength and power. No cone pulley is used, but the speed can be varied when desired by changing one gear, this having been shown by experience to be a more satisfactory arrangement for such a machine than a cone pulley, the speed, of course being required to be changed much less frequently than in the case with other tools, such as the lathe or drill press.

The platen moves in either direction when in operation, so that it is not necessary to move it back at the completion of a rack, but another one can be put in and the platen instantly arranged to move in the other direction. Any desired arrangement of cutters may be made where more than one is used; as, for instance, where two are to be used both may be finishing cutters, in which case the machine is made to move two spaces for each cut, and, of course, two teeth are finished at each cut. Or, one cutter may be for roughing while the other finishes, in which case the platen moves only one space. Or, supposing twelve cutters to be in use, all of them may be finishing cutters, if the size of tooth and nature of the work permit it, so that twelve teeth are finished at one cut, or any proportion of them may be for roughing.

When using a gang of cutters, the cutting points are so set as to form a spiral line as shown in the engraving, which has been found to make the work much easier, and more free from vibration. The engraving shows a heavy rack which has been cut on the machine, finishing four teeth at each cut, as shown by the uncompleted cut. A complete system is provided for removing chips and oil, and there is a pump which returns the latter to the cutter, washing out the chips. Means are provided by which the machine is under the full control of the operator in whatever position he may find it most convenient to stand; and the movement of the upright to and from the platen is graduated in thousandths of an inch for setting the cutter to depth, after which operation it is firmly locked in position at the bottom, and at the top by the tie rod.

Fig. 2, Plate XIV.-B, represents Gould & Eberhardt's automatic

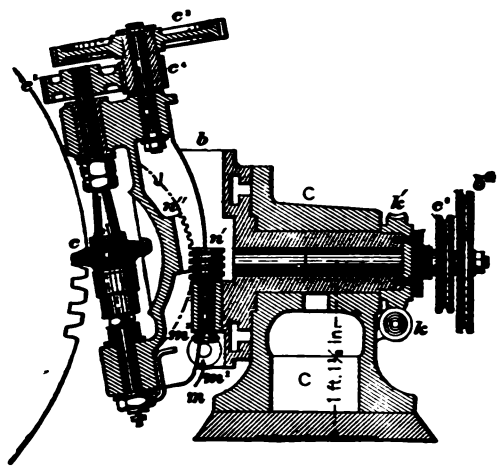

Fig. 2073.

gear cutter, which is driven by the stand shown on the right hand, the changes of speed being made by altering the gear wheels on the stand.

There is also provided a support for the outer end of the work arbor, and where desired, a pump for returning oil to the cutter, the oil as it flows from the cutter being conducted to a pan in the base of the machine, from whence it is taken by the pump, which is shown in the cut at the side of the machine near the floor. All the movements of the machine are entirely automatic.

BROWN & SHARPE AUTOMATIC SPUR GEAR CUTTING MACHINE No. 5.—A general view of this machine is given in Fig. 2074. It consists, as will be seen, of a substantial box-frame bed, upon which slides the carriage carrying the cutter spindle, and a rigid vertical column, upon which is mounted the carriage carrying the work spindle and index mechanism.

This machine is one of a series built by the above manufacturers, and the following are the most important features that have been

applied to all machines of this series. The driving power and ratio of gearing are amply proportioned to the capacity of the machines, and give a large number of changes of cutter feed combined with a wide range and great ease of adjustment.

The feed and working mechanisms are placed at the end of the machine, enclosed in a case, and are easy of access for changing the feed or examining the parts.

The cutter spindle is driven by spiral gears, thus giving a smooth cutting action, and also doing away with a belt tightener or other device for adjusting the belt. The outer end is supported by a bearing fastened rigidly to the cutter slide, but easily removed for changing cutters.

The drive for returning the cutter slide and for indexing is independent of cutter drive and feed, so that the quick return of cutter slide and high speed of indexing mechanism are constant, whatever the speed or the feed of cutter.

The indexing mechanism is so designed that the liability of error or failure is reduced to a minimum.

The Nos. 5 and 6 machines are provided with means for raising and lowering the work spindle slide by power.

As the life and efficiency of machines depend largely upon the amount of care bestowed upon them, it is important that they should be kept clean and well oiled and that all repairs should be promptly attended to. All spiral gears and worms should be kept flooded with oil. A heavy oil is recommended; a light cylinder oil is preferable. When the oil shows signs of becoming dirty or thick, it should be removed and new oil substituted. Suitable receptacles for holding the oil are shown at A, Figs. 2075 and 2079, B, Figs. 2075 and 2076, C and D, Figs. 2076 and 2078, and E, Figs. 2075 and 2078.

The guiding ways of the cutter slide should be kept clean and well oiled. Provision is made at F, Figs. 2075, 2076, and 2078, for oiling the feed screw and nut. These must be kept well supplied with oil while the machine is running.

The index worm and worm-wheel should be kept clean and well oiled, as the accumulation of dirty or thick oil will affect the indexing. To take up the end play of the cutter spindle, remove the gear case cover M, Fig. 2079, adjust the nut N, and lock in position with the screw O. The feed screw is adjusted for end play by means of the nut Q, Fig. 2078. When correctly adjusted, lock with the small screw shown at R.

The end play of the index worm is adjusted by means of the sleeve O, Fig. 2075. After adjusting the sleeve, it should be locked with the check nut. If backlash occurs in the index worm and worm-wheel, loosen the stop screw P, Fig. 2075, and force the worm into the wheel. Care should be taken not to force the worm into the wheel too hard, as it will cause the parts to bind and impair the accuracy of the indexing mechanism. To operate the work spindle slide by power, first be sure that all the clamps are loosened and remove crank from shaft A′, Fig. 2076; then by raising or lowering the lever L′, Figs. 2076 and 2077, the slide can be raised or lowered to the height required. To adjust the friction, which operates the reversing mechanism, remove the top of the feed case K, Fig. 2078, throw the lever R, Figs. 2076 and 2077, back as far as possible in the direction shown by the arrow, Fig. 2076, and loosen screw S, Fig. 2078; with screw U, draw in wedge T, and lock with screw S. Then bring the lever R, Fig. 2076, to a central position by means of the stop V and try the feed screw by hand to see that the friction works freely. To set the cutter central, loosen nut H, Fig. 2076, adjust the spindle by means of the worm and rack, shown at G, and, when properly adjusted, clamp with nut H.

In using the indicator, furnished with each machine and shown in Fig. 2080, remove the dust guard from the front of the cutter slide and clamp the indicator to the bed by means of the screw I, Fig. 2080. The position of the indicator should be such that the point of the screw J shall come about to the pitch line of the cutter. After the indicator has been properly set, indicate first one and then the other side of the cutter. To indicate opposite sides of the cutter, remove the arm K from pin L, replace it with the opposite side up, and adjust the cutter spindle longitudinally until the zero on the arm is equidistant from the zero on the plate.

Placing the work: Remove the nut W, Figs. 2075 and 2076, from the work arbor and with nut X force the bushing Y off the arbor. By reversing the nut X to loosen the spring collet in the spindle, and taking hold of the hand wheel Z, the arbor can be drawn back into the spindle. Insert bushing Y into bore of the gear blank and swing the blank into place. Push the work arbor forward and screw nut W into place, expanding the bushing Y solidly into bore of gear blank. Loosen nut X a little, and with the hand wheel Z draw the arbor and collet snugly into the taper hole in spindle. In setting the machine first set the reversing lever R, Figs. 2076 and 2077, central, and run the cutter slide forward by hand until the cutter is under the blank. Second, loosen all the clamps on the work spindle slide and outer support, lower the blank by means of the hand wheel or crank at A′, Fig. 2076, until the cutter, which should be running, just touches its periphery, making proper allowance in case the blank is inaccurately turned.

When the cutter just touches the blank draw the cutter slide back so that the cutter will clear the blank, and set the dial E′, Fig. 2076, at zero, then lower the work spindle slide a little more than the depth required and raise it so that the dial E′ will read to the proper depth. By this method the weight of the various parts will rest upon the screw, and the slide will be less liable to change position when clamping. After the work is properly set, clamp the work spindle slide and the outer support. In clamping, first clamp the dovetailed slide, next the plain gib, and lastly, the outer support. Bring the rim rest shown at R′, Fig. 2075, into position, setting it high enough to clear the cutter, and adjust so that it will just touch the rim of the blank. Care should be taken that the rim rest does not bind at any point, as it would affect the indexing. To try the adjustment of the rim rest, throw the worm out of mesh with worm-wheel and turn the work spindle by hand. After trying adjustment, throw the worm back into mesh with the worm-wheel and clamp securely by means of handle H′, Fig. 2075.

Put on the proper change gears, as given in the table, for the required number of divisions, and set the stop for the proper number of turns of the locking disk by lifting the knob D′, Fig. 2075, and sliding the stop along to the recess numbered to correspond with that given in the table sent with the machine. To adjust the locking disk for the proper number of turns, lift the spring knob, shown in Fig. 2081, and slide the block along until the knob is opposite the number of turns required, as indicated in index table, and drop the knob into the recess. Determine from tables the proper feed change gears and place as at I′, Fig. 2076.

The transposing gears, which are back of the feed change gears and shown at J′, Fig. 2076, should not be disturbed except in changing from the coarser to the finer feeds. In setting reversing dogs, move the cutter slide forward, leaving enough space between the cutter and work for indexing, and clamp the reversing dog G″, Fig. 2075, so it will rest against the stop X′. Start the machine and throw in the feed by means of the lever R, Figs. 2076 and 2077, which should be thrown as far forward as possible. The stop V should be dropped so as to allow the lever R to come all the way back when reversing. When the centre of the cutter has nearly reached the forward edge of the work, clamp the dog G″, Fig. 2075, while it is resting against the stop X′. It may be necessary to slightly adjust the dogs to avoid loss of time at the ends of travel of the cutter slide.

To measure or gauge the teeth of gear while in the machine, lift the stop X′, Fig. 2075, to clear the dog G′ and run the cutter slide back out of the way. The adjustment of the dogs G′ and G″ need not be disturbed, and the stop X′ will resume its position so that when the cutter slide is run forward it will engage the dogs as before. If the teeth gauge correctly the machine is ready to proceed with the work.

If it is desired to recut a gear or to cut out a bad place in the blank, loosen the clamp screw S′, Fig. 2075, and adjust the blank to the proper position by means of the knob C′ and clamp securely with the screw S′.

In cutting several teeth at one time, the advantage is in the increase of production, but at a sacrifice of accuracy. The advantage claimed for omitting one or more teeth before cutting the next is the more even distribution of heat throughout the blank. On the other hand, however, good results can be obtained by arranging the feed and speed slow enough to avoid heating.

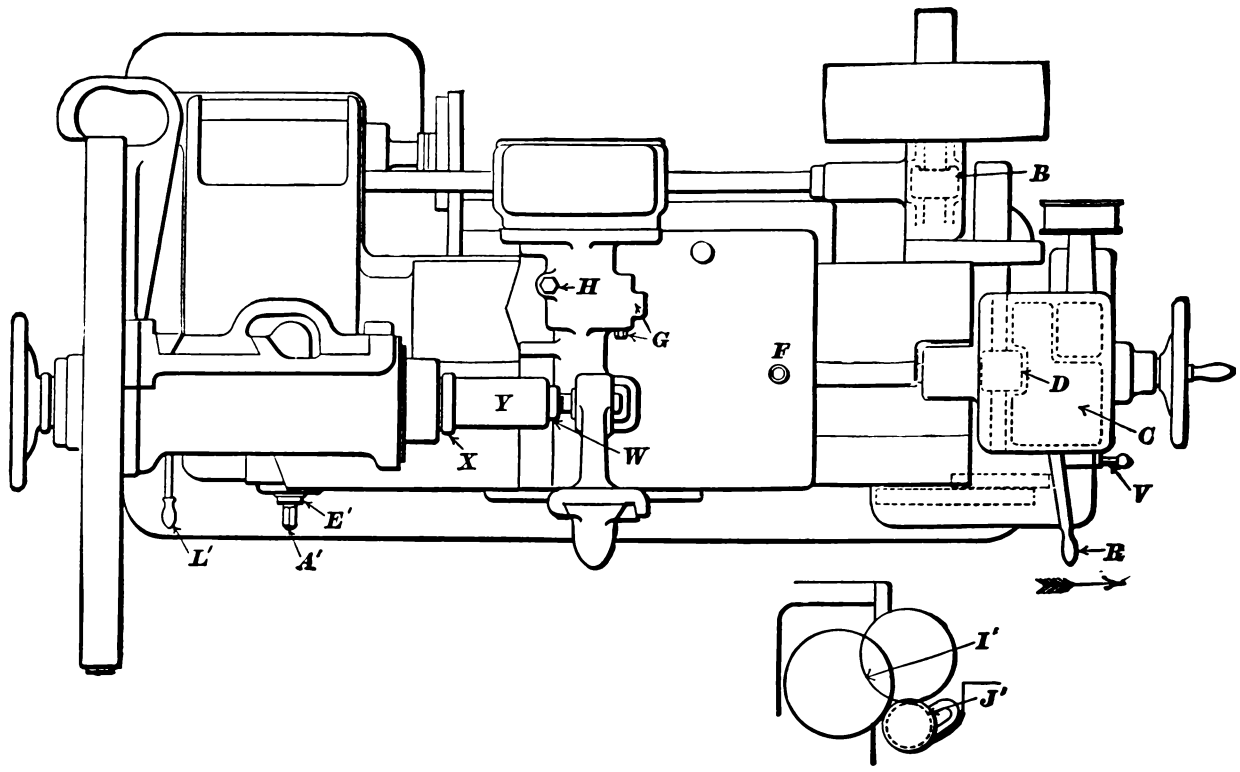

Fig. 2076.

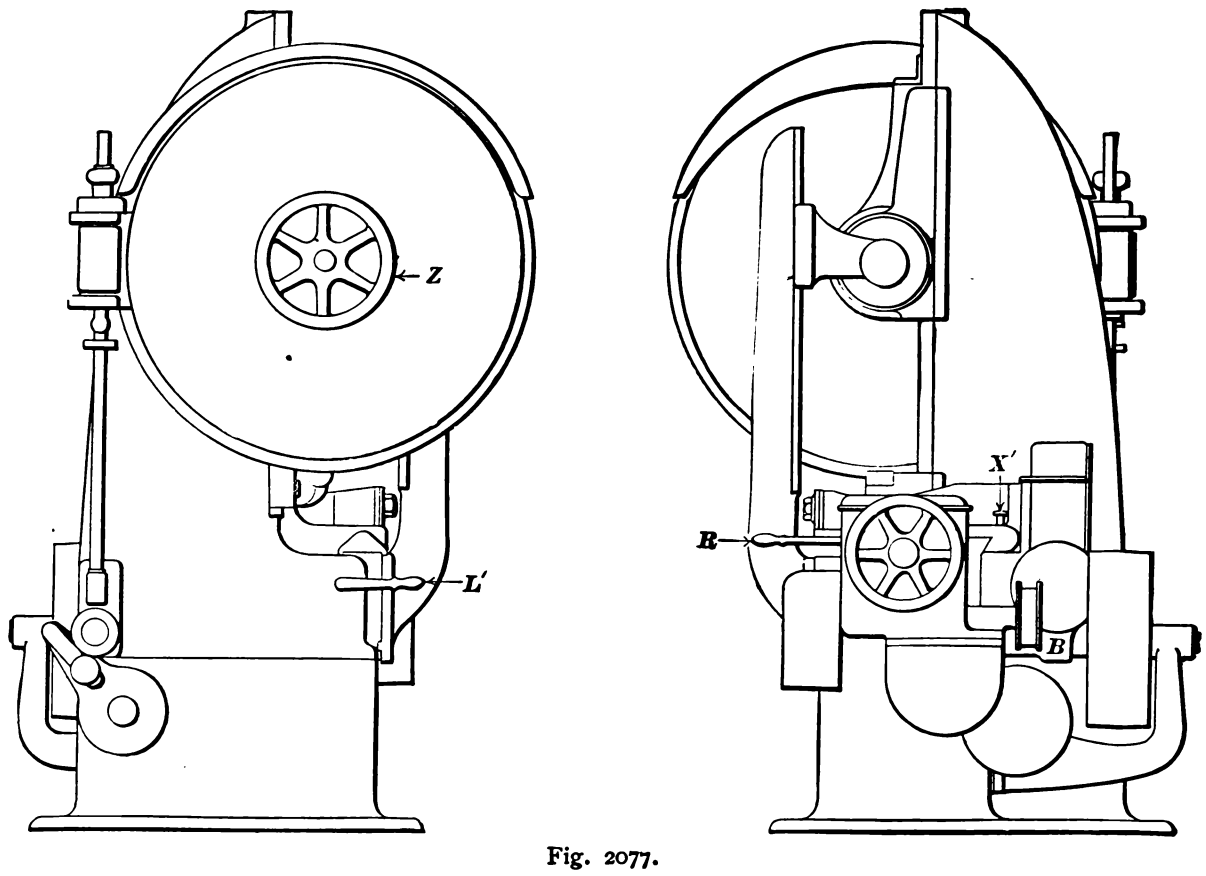

Fig. 2077.

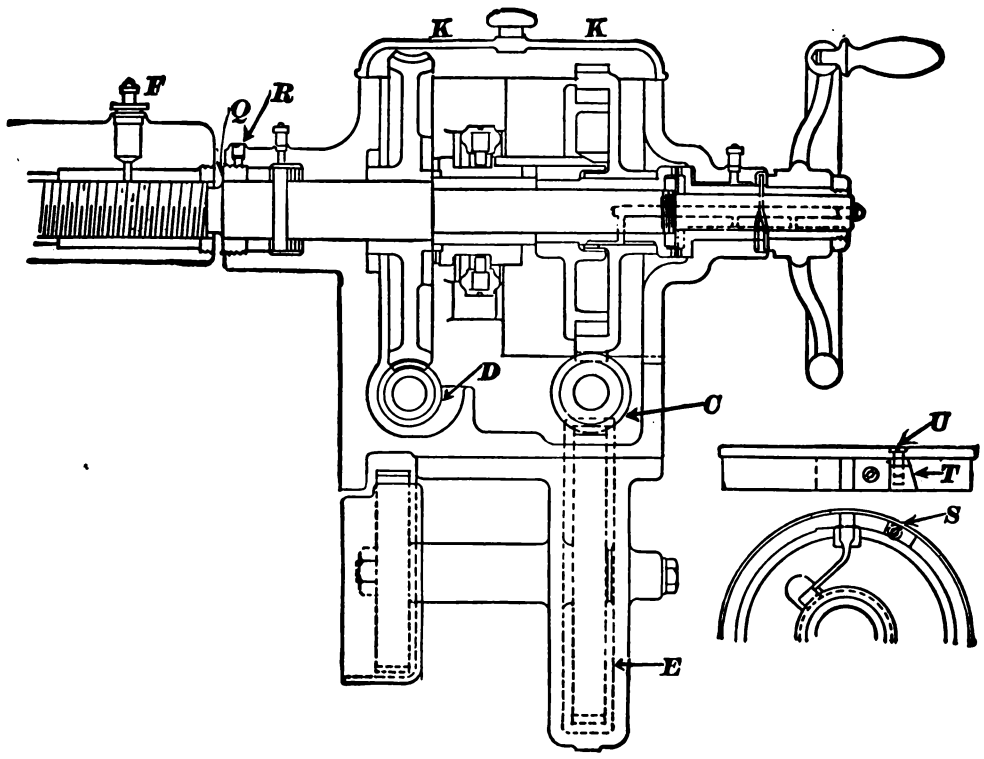

Fig. 2078.

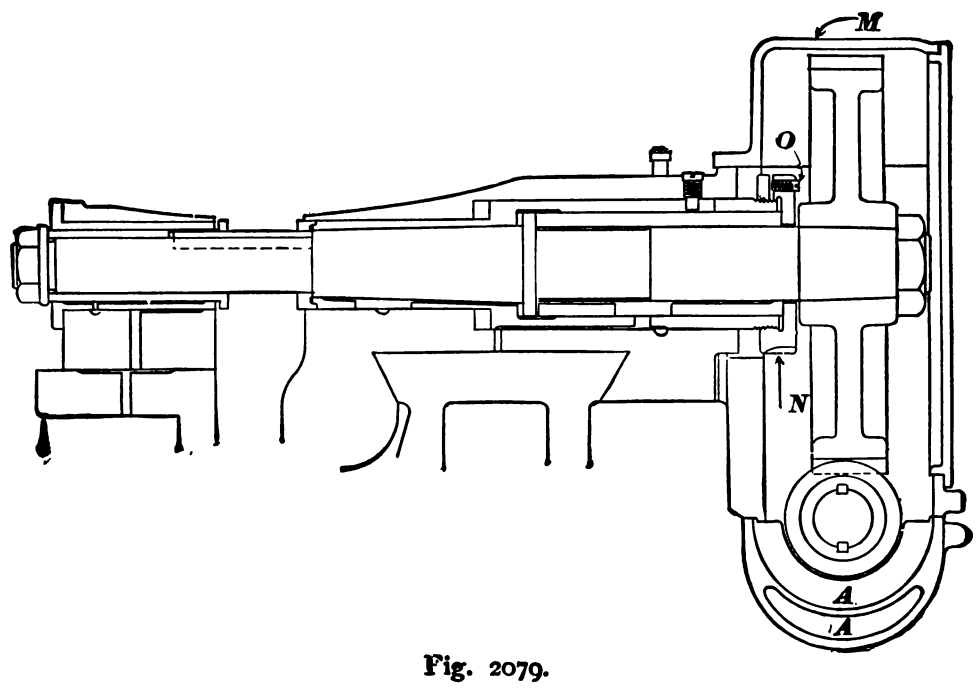

Fig. 2079.

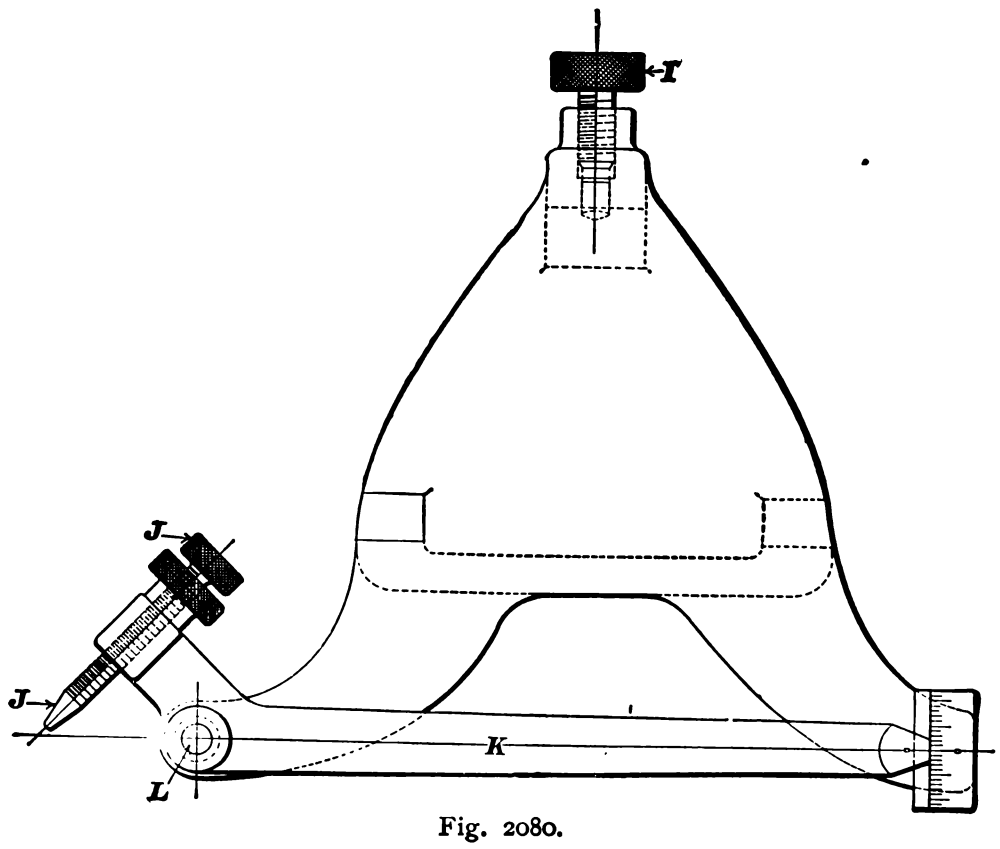

Fig. 2080.

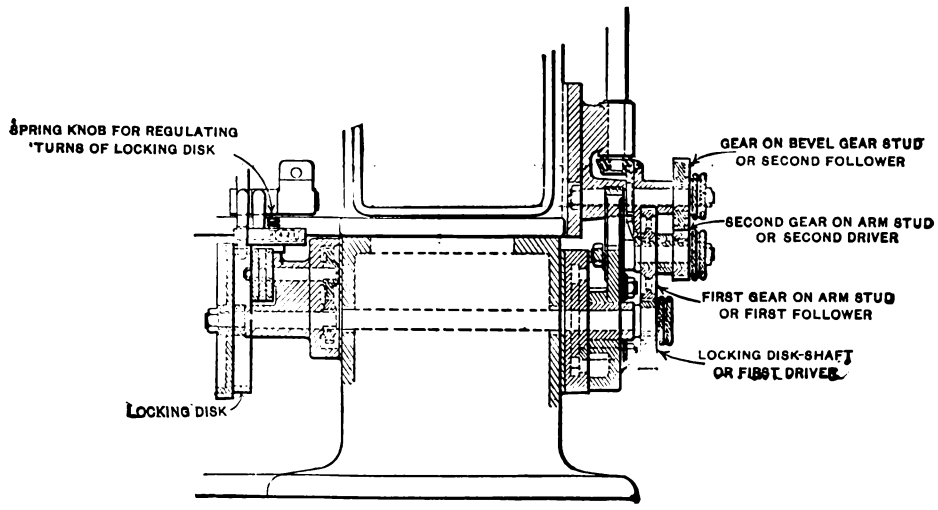

Fig. 2081

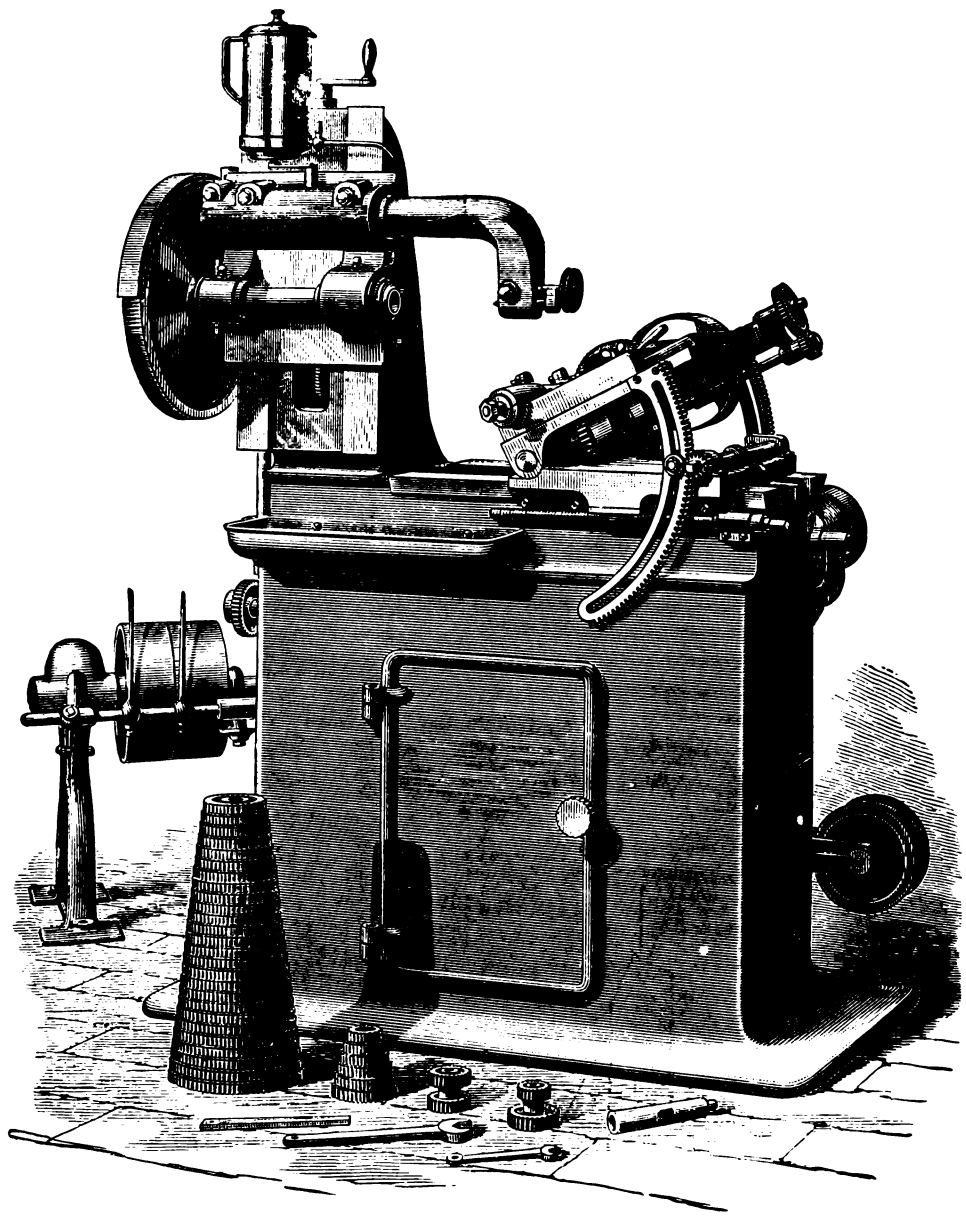

Fig. 2082.

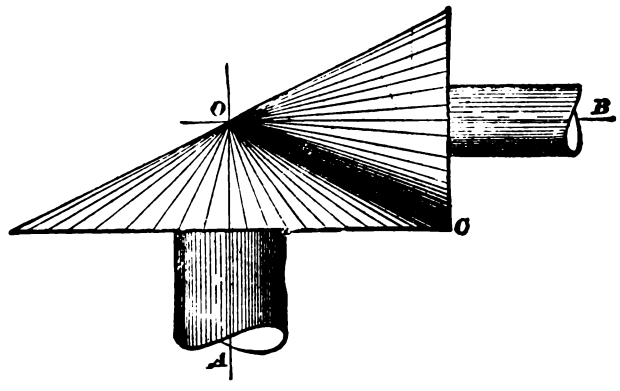

Fig. 2083.

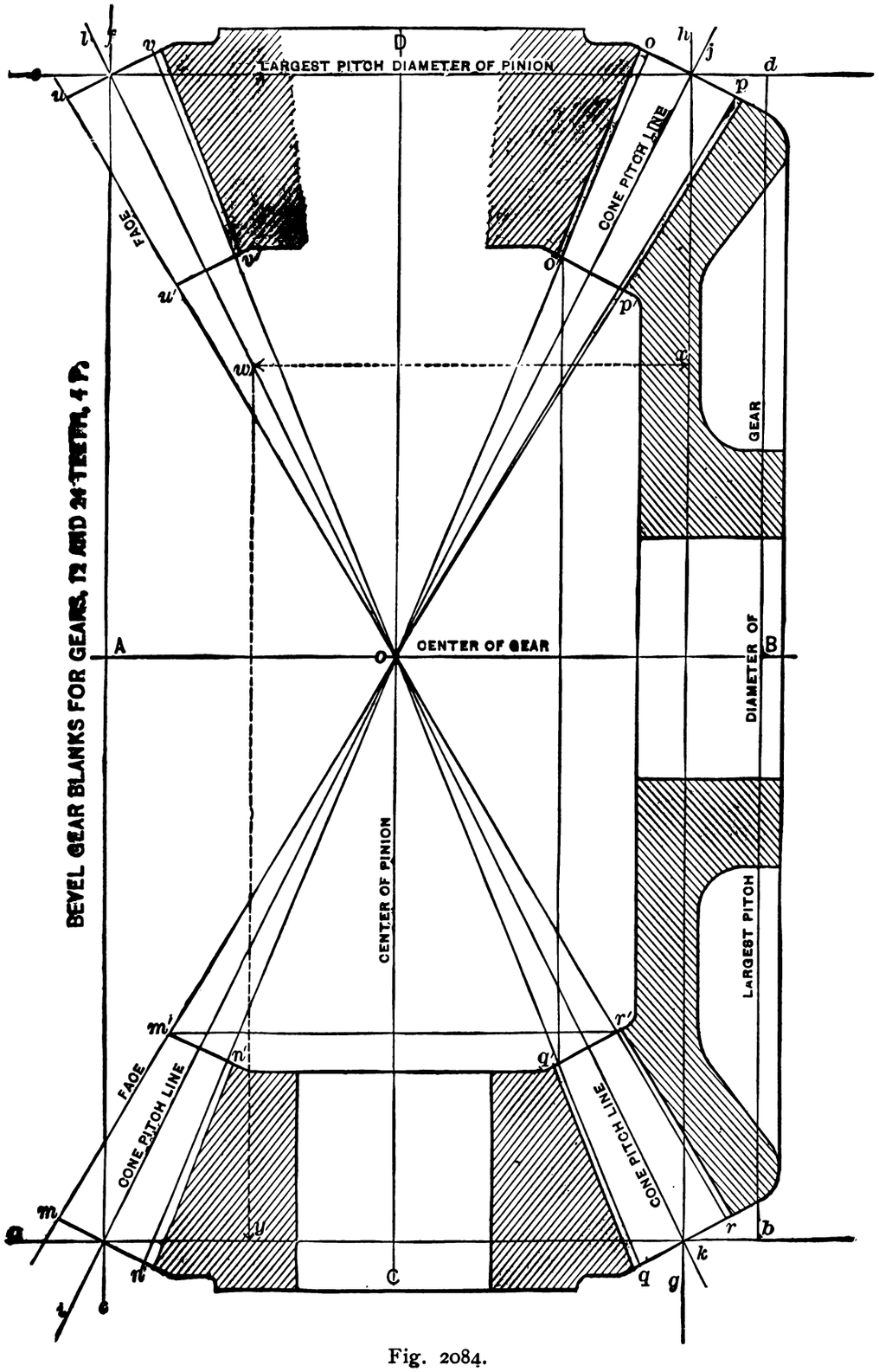

Fig. 2084.

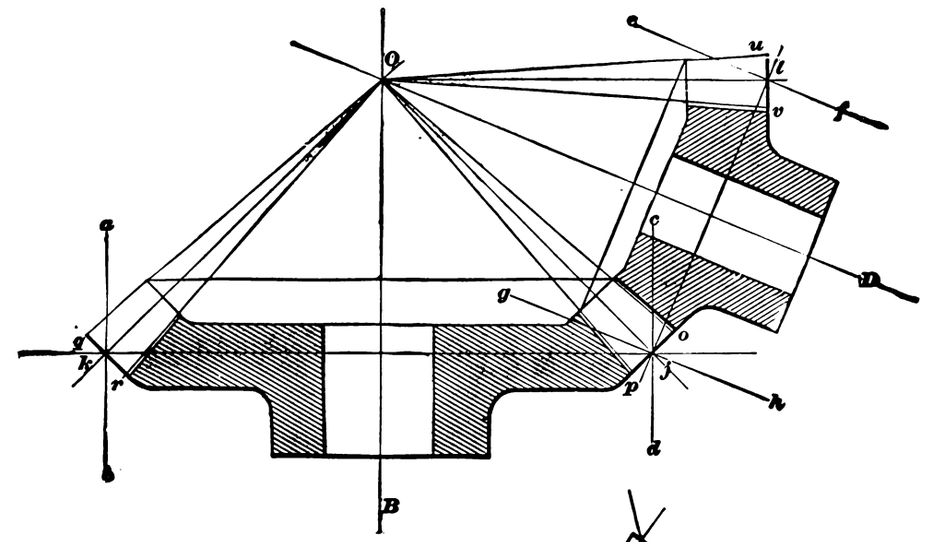

Fig. 2085.

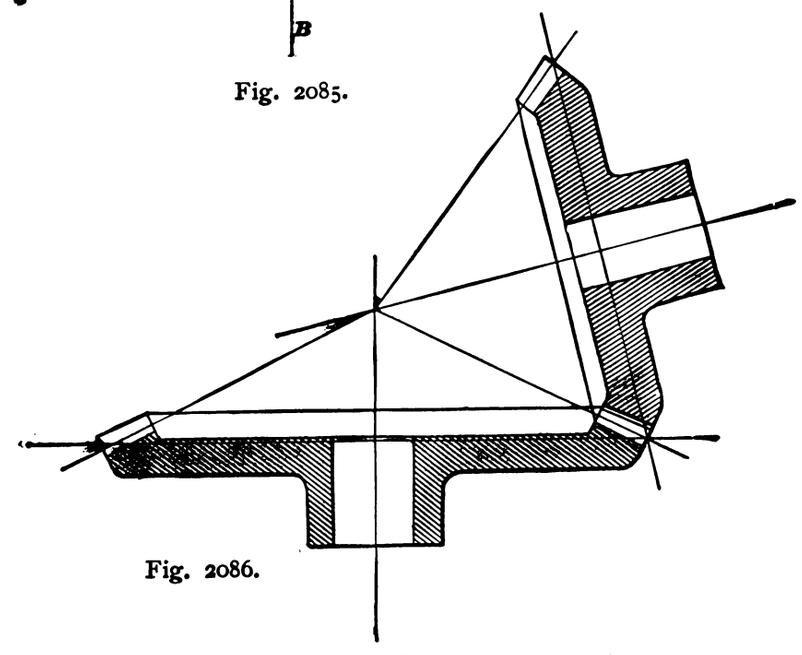

Fig. 2086.

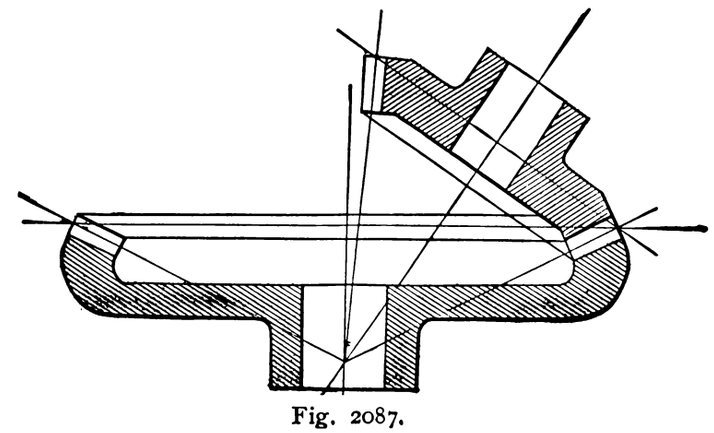

Fig. 2087.

BROWN & SHARPE AUTOMATIC GEAR-CUTTING MACHINE No. 13.—This machine, which is illustrated in Fig. 2082, cuts both spur and bevel gears up to 18 inches in diameter, 4 inches width of face, and 6 diametral pitch. It consists of a box bed. Upon the horizontal slideway is a carriage, upon which is mounted the cutter slide, which is pivoted at one end and has two segmental tooth segments, by means of which the feed motion of the cutter may be set to any angle (within 90 degrees) that may be required for cutting bevel gears, for which purpose the cutter can be set on either side of the centre line of the work ; a vernier graduated to read to thousandths of an inch indicating this adjustment. The vertical head, which carries the work spindle, the index wheel, and the overhanging supporting arm ; is adjusted for height of the work by means of the screw shown. A dial graduated to read to thousandths of an inch indicates this adjustment. The movements of the indexing mechanism and of the cutter are entirely automatic. The spindle has eight changes of speed. The cutter arbor is $\frac{7}{8}$ inch in diameter. The overhanging arm clears gears to $7\frac{1}{2}$ inches in diameter. Larger gears are supported by a rest placed back of the rim of gear, opposite cutter.

The indexing mechanism consists of a worm and worm gear driven by change gears. The change gears provide for the cutting of all numbers of teeth from 12 to 50, all even numbers to 100, all numbers divisible by 3 to 150, by 4 to 200, and by 5 to 250.

Tables giving cutter speeds for different pitches, the changes for gears to use for cutting the various numbers of teeth, and the changes for feed gears to obtain the proper feed for the cutter slide are provided with each machine. The countershaft has tight and loose pulleys 12 inches in diameter for 3-inch belt and should run about 200 revolutions per minute.

BEVEL GEARS.—Bevel gears connect shafts whose axes meet when sufficiently prolonged. The teeth of bevel gears are formed about the frustums of cones whose apexes are at the same point where the shafts meet. In Fig. 2083 we have the axes A O and B O meeting at O, and the apexes of the cones also at O. These cones are called the pitch cones, because they roll upon each other, and because upon them the teeth are pitched. If, in any bevel gear, the teeth were sufficiently prolonged toward the apex, they would become infinitely small ; that is, the teeth would all end in a point, or vanish at O. We can also consider a bevel gear as beginning at the apex and becoming larger and larger as we go away from the apex. Hence, as the bevel gear teeth are tapering from end to end, we may say that a bevel gear has a number of pitches and pitch circles, or diameters : in speaking of the pitch of a bevel gear, we mean always the pitch at the largest pitch circle, or at the largest pitch diameter, as at *b d*, Fig. 2084.

Fig. 2084 is a section of three bevel gears, the gear *o* B *q* being twice as large as the two others. The outer surface of a tooth, as *m m'*, is called the face of the tooth. The distance *m m'* is usually called the length of the face of the tooth, though the real length is the distance that it occupies upon the line *O i* The outer part of a tooth at *m n* is called its large end, and the inner part *m' n'* the small end.

The directions given in connection with Fig. 2084 apply to gears with axes at right angles.

Having decided upon the pitch and the numbers of teeth :

1. Draw centre lines of shafts, A O B and C O D, at right angles.

2. Parallel to A O B, draw lines *a b* and *c d*, each distant from A O B equal to half the largest pitch diameter of one gear. For 24 teeth, 4 pitch, this half largest pitch diameter is 3 inches.

3. Parallel to C O D, draw lines *e f* and *g h*, distant from C O D equal to half the largest pitch diameter of the other gear. For a gear 12 teeth, 4 pitch, this half largest pitch diameter is $1\frac{1}{2}$ inches.

4. At the intersection of these four lines, draw lines O *i*, O *j*, O *k*, and O *l*. These lines give the size and shape of pitch cones, and are called "cone pitch lines."

5. Perpendicular to the cone pitch lines and through the intersection of lines *a b*, *c d*, *e f*, and *g h*, draw lines *m n*, *o p*, *q r*. We have drawn also *u v* to show that another gear can be drawn from the same diagram. Four gears, two of each size, can be drawn from this diagram.

6. Upon the lines *m n*, *o p*, *q r*, the addenda and depth of the teeth are laid off, these lines passing through the largest pitch circle of the gears. Lay off the addendum, it being in these gears $\frac{1}{4}$ inch. This gives distance *m n*, *o p*, *q r*, and *u v* equal to the working depth of teeth, which in these gears is $\frac{1}{2}$ inch. The addendum, of course, is measured perpendicularly from the cone pitch lines as at *k r*.

7. Draw lines O *m*, O *n*, O *p*, O *o*, O *q*, O *r*. These lines give the height of teeth above the cone pitch lines as they approach O, and would vanish entirely at O. It is quite as well never to have the length of teeth, or face, *m m'* longer than one-third the apex distance *m* O, nor more than two and one-half times the circular pitch.

8. Having decided upon the length of face, draw limiting lines *m' n'* perpendicular to *i* O, *q' r'* perpendicular to *k* O, and so on.

The distance between the cone pitch lines at the inner ends of the teeth *m' n'* and *q' r'* is called the inner or smaller pitch diameter, and the circle at these points is called the smallest pitch circle. We now have the outline of a section of the gears through their axes. The distance *m r* is the whole diameter of the pinion. The distance *q o* is the whole diameter of the gear. In practice these diameters can be obtained by measuring the drawing. The diameter of pinion is 3.45 inches, and of the gear 6.22 inches. We can find the angles also by measuring the drawing with a protractor. In the absence of a protractor, templets can be cut to the drawing. The angle formed by line *m m'* with *a b* is the angle of face of pinion, in this pinion 59 degrees 11 minutes, or nearly $59\frac{1}{6}$ degrees. The lines *q q'* and *g h* give us angle of face of gear, for this gear 22 degrees 19 minutes, or nearly $22\frac{1}{3}$ degrees. The angle formed by *m n* with *a b* is called the angle of edge of pinion, in our sketch 26 degrees 34 minutes, or about $26\frac{1}{2}$ degrees. The angle of edge of gear line *q r* with *g h* is 63 degrees 26 minutes, or about $63\frac{1}{2}$ degrees. In turning blanks to these angles we place one arm of the protractor or templet against the end of the hub, when trying angles of a blank. Some designers give the angles from the axes of gears, but it is not convenient to try blanks in this way. The method that we have given comes right also for angles as figure in compound rests.

When axes are at right angles, the sum of angles of edge in the two gears equals 90 degrees, and the sums of angle of edge and face in each gear are alike.

The angles of the axes remaining the same, all pairs of bevel gears of the same ratio have the same angle of edge ; all pairs of same ratio and of same numbers of teeth have the same angles of both edges and faces independent of the pitch. Thus, in all pairs of bevel gears having one gear twice as large as the other, with axes at right angles, the angle of edge of large gear is 63 degrees 26 minutes, and the angle of edge of small gear is 26 degrees 34 minutes.

In all pairs of bevel gears with axes at right angles, one gear having 24 teeth and the other gear having 12 teeth, the angle of face of small gear is 59 degrees 11 minutes.

The following method of obtaining the whole diameter of bevel gears is sometimes preferred :

From *k* lay off, upon the cone pitch line, a distance K *w*, equal to ten times the working depth of the teeth = 10 D''. Now add $\frac{1}{10}$ of the shortest distance of *w* from the line *g h*, which is the perpendicular dotted line *w x*, to the outside pitch diameter of gear, and the sum will be the whole diameter of gear. In the same manner $\frac{1}{10}$ of *w y*, added to the outside pitch diameter of pinion, gives the whole diameter of pinion. The part added to the pitch diameter is called the *diameter increment*.

A somewhat similar construction will do for bevel gears whose axes are not at right angles.

In Fig. 2085 the axes are shown at O B and O D, the angle B O D being less than a right angle.

1. Parallel to O B, and at a distance from it equal to the radius of the gear, we draw the lines *a b* and *c d*.

2. Parallel to O D, and at a distance from it equal to the radius of the pinion, we draw the lines *e f* and *g h*.

3. Now, through the point *j* at the intersection of *c d* and *g h*, we draw a line perpendicular to O B. This line *k j*, limited by *a b* and *c d*, represents the largest pitch diameter of the gear.

Through *j* we draw a line perpendicular to O D. This line *j l*, limited by *e f* and *g h*, represents the largest pitch diameter of the pinion.

4. Through the point *k* at the intersection of *a b* with *k j*, we draw a line to O, a line from *j* to O, and another from *l*, at the intersection *j l* and *e f* to O. These lines O *k*, O *j*, and O *l*, represent the cone pitch lines as in Fig. 2084.

5. Perpendicular to the cone pitch lines we draw the lines *u v*, *o p*, and *q r*. Upon these lines we lay off the addenda and working depth as in the previous figure, and then draw lines to the point O as before.

By a similar construction, Figs. 2086 and 2087 can be drawn.

Forms and Sizes of Teeth; Cutting Teeth.—To obtain the form of the teeth in a bevel gear we do not lay them out upon a pitch circle, as we do in a spur gear, because the rolling pitch surface of a bevel gear, at any point, is of a longer radius of curvature than the actual radius of a pitch circle that passes through that point. Thus, in Fig. 2088, let *f g c* be a cone about the axis O A, the diameter of the cone being *f c*, and its radius *g c*. Now the radius of curvature of the surface, at *c*, is evidently longer than *g c*, as can be seen in the other view at C; the full line shows the curvature of the surface, and the dotted line shows the curvature of a circle of the radius *g c*. It is extremely difficult to represent the exact form of bevel gear teeth upon a flat surface, because a bevel gear is essentially spherical in its nature; for practical purposes we draw a line *c* A perpendicular to O *c*, letting *c* A reach the centre line O A, and take *c* A as the radius of a circle upon which to lay out the teeth. This is shown at *c n m*, Fig. 2089. For convenience the line *c* A is sometimes called the back cone radius.

Let us take, for an example, a bevel gear and a pinion 24 and 18 teeth, 5 pitch, shafts at right angles. To obtain the forms of the teeth and the data for cutting, we need to draw a section of only a half of each gear, as in Fig. 2089.

1. Draw the centre lines A O and B O, then the lines *g h* and *c d*, and the gear blank lines. Extend the lines *o' p'* and *o p* until they meet the centre lines at A' B' and A B.

2. With the radius A *c* draw the arc *c n m*, which we take as the geometrical pitch circle upon which to lay out the teeth at the large end. The distance A' *c'* is taken as the radius of the geometrical pitch circle at the small end; to avoid confusion an arc of this circle is drawn at *c'' n' m'* about A.

3. For the pinion we have the radius B *c* for the geometrical pitch circle at the large end and B' *c'* for the small end; the distance B' *c'* is transferred to B *c'''*.

4. Upon the arc *c n m* lay off spaces equal to the tooth thickness at the large pitch circle, which in this example is .314 inch. Then draw the outlines of the teeth: for single curve teeth we draw a semi-circle upon the radius A *c*. For all bevel gears that are to be cut with a rotary disk cutter, or a common gear cutter, single curve teeth are chosen; and no attempt should be made to cut double curve teeth. We now have the form of the teeth at the large end of the gear. Repeat this operation with the radius B C about B, and we have the form of the teeth at the large end of the pinion.

5. The tooth parts at the small end are designated by the same letters as at the large, with the addition of an accent mark to each letter, as in the right hand column, Fig. 2089. The clearance, *f*, however, is usually the same at the small end as at the large, for convenience in cutting the teeth.

The sizes of the tooth parts at the small end are in the same proportion to those at the large end as the line O *c'* is to O *c*. In our example O *c'* is 2 inches, and O *c* is 3 inches; dividing O *c'* by O *c* we have $\frac{2}{3}$, or .666, as the ratio of the sizes at the small end to those at the large: *t'* is .209 inch or $\frac{2}{3}$ of .314 inch, and so on. If the distance *n m* is equal to the outer tooth thickness, *t*, upon the arc *c n m*, the lines *n* A and *m* A will be a distance apart equal to the inner tooth thickness *t'* upon the arc *c'' n' m'*. The addendum, *s'*, and the working depth, D''', are at *o' c'* and *o' p'*.

6. Upon the arcs *c'' n' m'* and *c'''* we draw the forms of the teeth of the gear and pinion at the inside.

As an example of the cutting of bevel gears with rotary disk cutters, or common gear cutters, let us take a pair of 8 pitch, 12 and 24 teeth, shown in Fig. 2090.

In making the drawing it is well to remember that nothing is gained by having the face F E longer than five times the thickness of the teeth at the large pitch circle, and that even this is too long when it is more than a third of the *apex distance* O *c*. To cut a bevel gear with a rotary cutter, as in Fig. 2091, is at best but a compromise, because the teeth change pitch from end to end, so that the cutter, being of the right form for the large ends of the teeth, cannot be right for the small ends, and the variation is too great when the length of face is greater than a third of the apex distance O *c*, Fig. 2090. In the example, one-third of the apex distance is $\frac{9}{16}$ inch, but F E is drawn only a half inch, which even, though rather short, has changed the pitch from 8 at the outside to finer than 11 at the inside. Frequently the teeth have to be rounded over at the small ends by filing; the longer the teeth the more we have to file. If there is any doubt about the strength of the teeth, it is better to lengthen at the large end, and make the pitch coarser rather than to lengthen at the small end.

These data are needed before beginning to cut:

1. The pitch and the numbers of the teeth the same as for spur gears.

2. The data for the cutter, as to its form: sometimes two cutters are needed for a pair of bevel gears.

3. The whole depth of the tooth spaces, both at the outside and inside ends; D'' + *f* at the outside, and D''' + *f* at the inside.

4. The thickness of the teeth at the outside and at the inside; *t* and *t'*.

5. The height of the teeth above the pitch lines at the outside and inside; *s* and *s'*.

6. The cutting angles, or the angles that the path of the cutter makes with the axes of the gears. In Fig. 2090 the cutting angle for the gear *c* D is A O *p*, and the cutting angle for the pinion is B O *o*.

The form of the teeth in one of these gears differs so much from that in the other gear that two cutters are required. In determining these cutters we do not have to develop the forms of the gear teeth as in Fig. 2089; we need merely measure lines A *c* and B *c*, Fig. 2090, and calculate the cutter forms as if these distances were the radii of the pitch circles of the gears to be cut. Twice the length A *c*, in inches, multiplied by the diametral pitch, equals the number of teeth for which to select a cutter for the twenty-four-tooth gear: this number is about 54, which calls for a No. 3 bevel gear cutter. Twice B *c*, multiplied by 8, equals about 13, which indicates a No. 8 bevel gear cutter for the pinion. This method of selecting cutters is based upon the idea of shaping the teeth as nearly right as practicable at the large end, and then filing the small ends where the cutter has not rounded them over enough.

In Fig. 2092 the tooth L has been cut to thickness at both the outer and inner pitch lines, but it must still be rounded at the inner end. The teeth M M have been filed. In thus rounding the teeth they should not be filed thinner at the pitch lines.

There are several things that affect the shape of the teeth, so that the choice of cutters is not always so simple a matter as the taking of the lines A *c* and B *c* as radii.

In cutting a bevel gear, in the ordinary gear-cutting machines, the finished spaces are not always of the same form as the cutter might be expected to make, because of the changes in the positions of the cutter and of the gear blank in order to cut the teeth of the right thickness at both ends. The cutter must, of course, be thin enough to pass through the small end of the spaces, so that the large end has to be cut to the right width by adjusting either the cutter or the blank sidewise; then rotating the blank, and cutting twice around.

Thus, in Fig. 2091, a gear and a cutter are set to have a space widened at the large end *e'*, and the last chip to be cut off by the right side of the cutter, the cutter having been moved to the left, and the blank rotated in the direction of the arrow; in a universal milling machine the same result would be attained by moving the blank to the right and rotating it in the direction of the arrow. It may be well to remember that in setting to finish the side of a tooth, the tooth and the cutter are first separated sidewise, and the blank is then rotated by indexing the spindle to bring the large end of the tooth up against the cutter. This tends not only to cut the spaces wider at the large pitch circle, but also to cut off still more at the face of the tooth; that is, the teeth may be cut rather

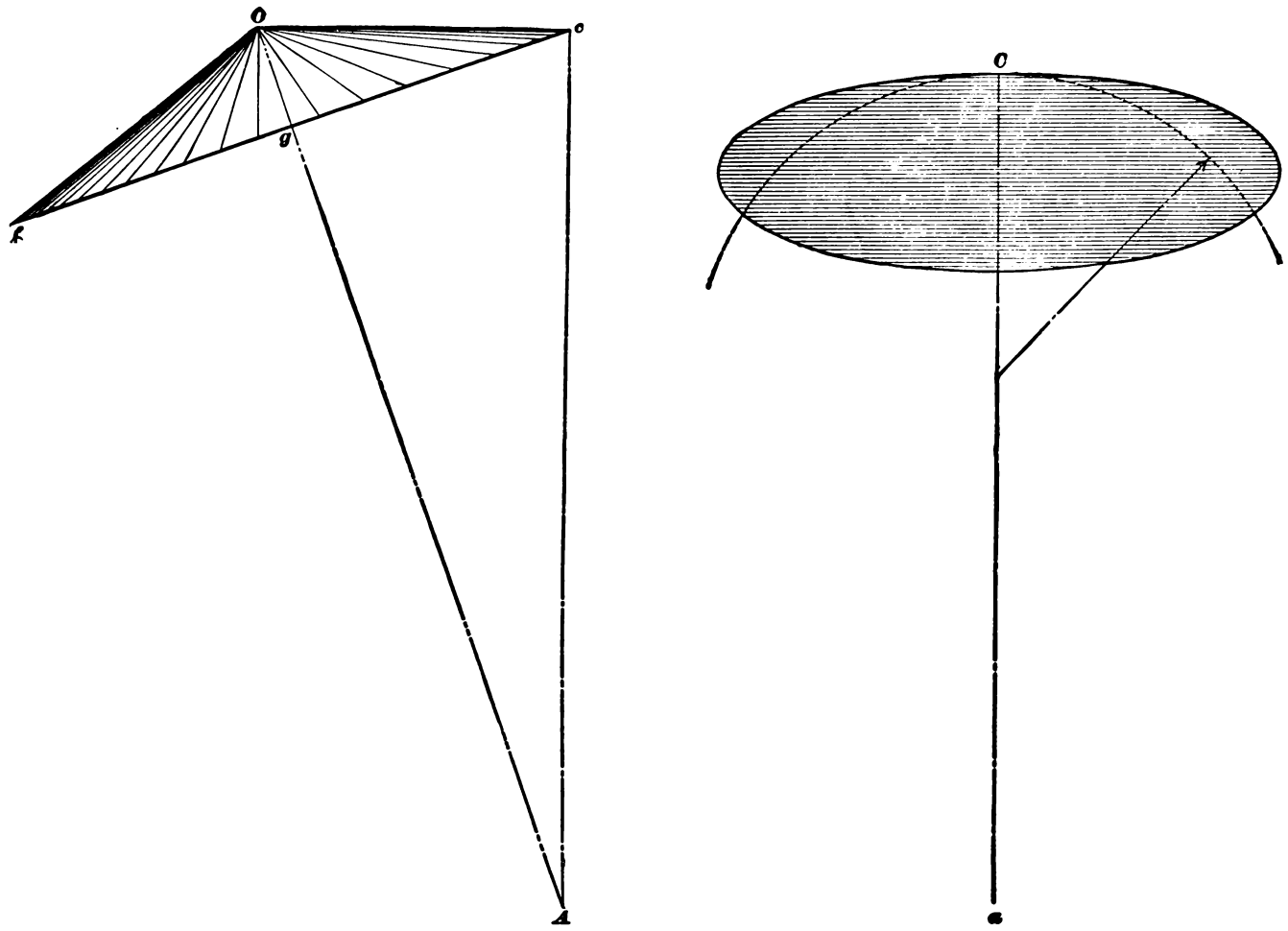

Fig. 2088.

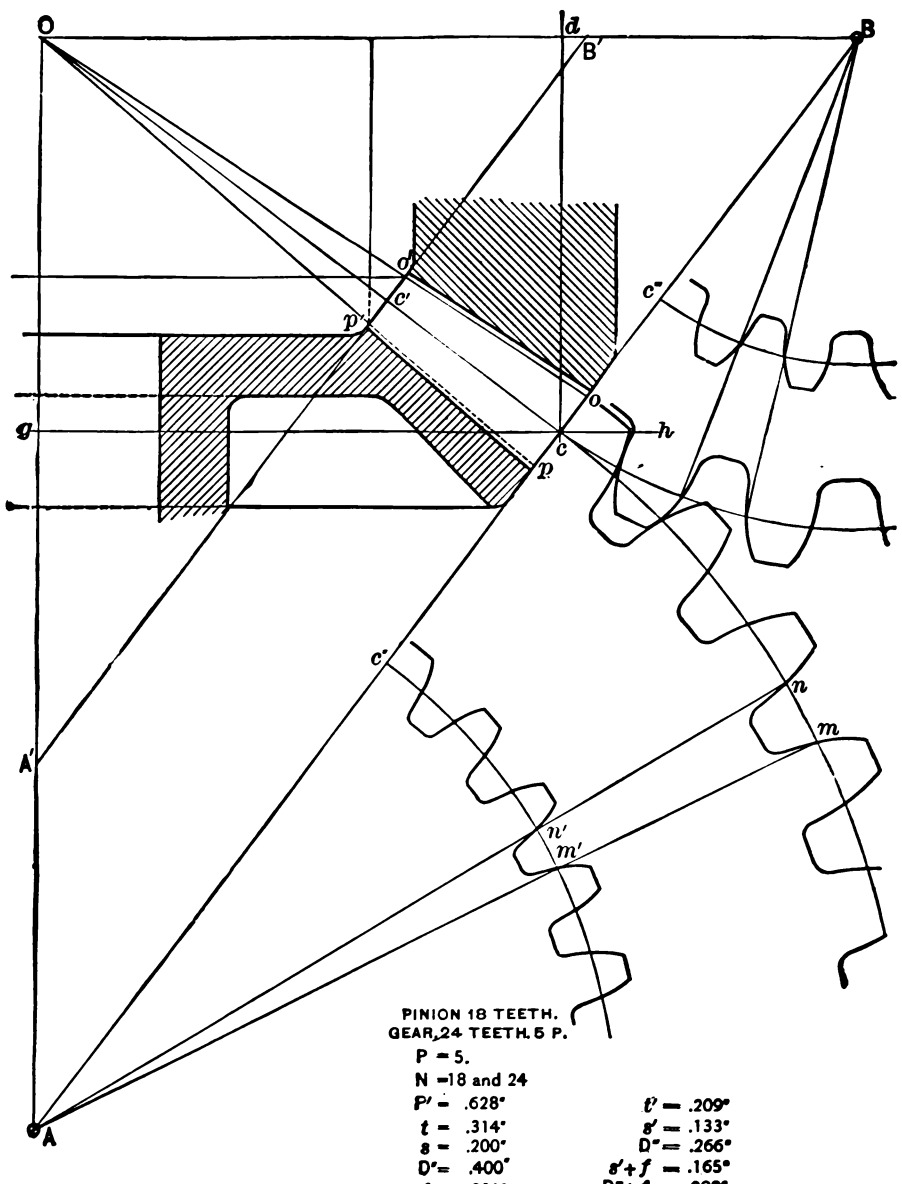

Fig. 2089.

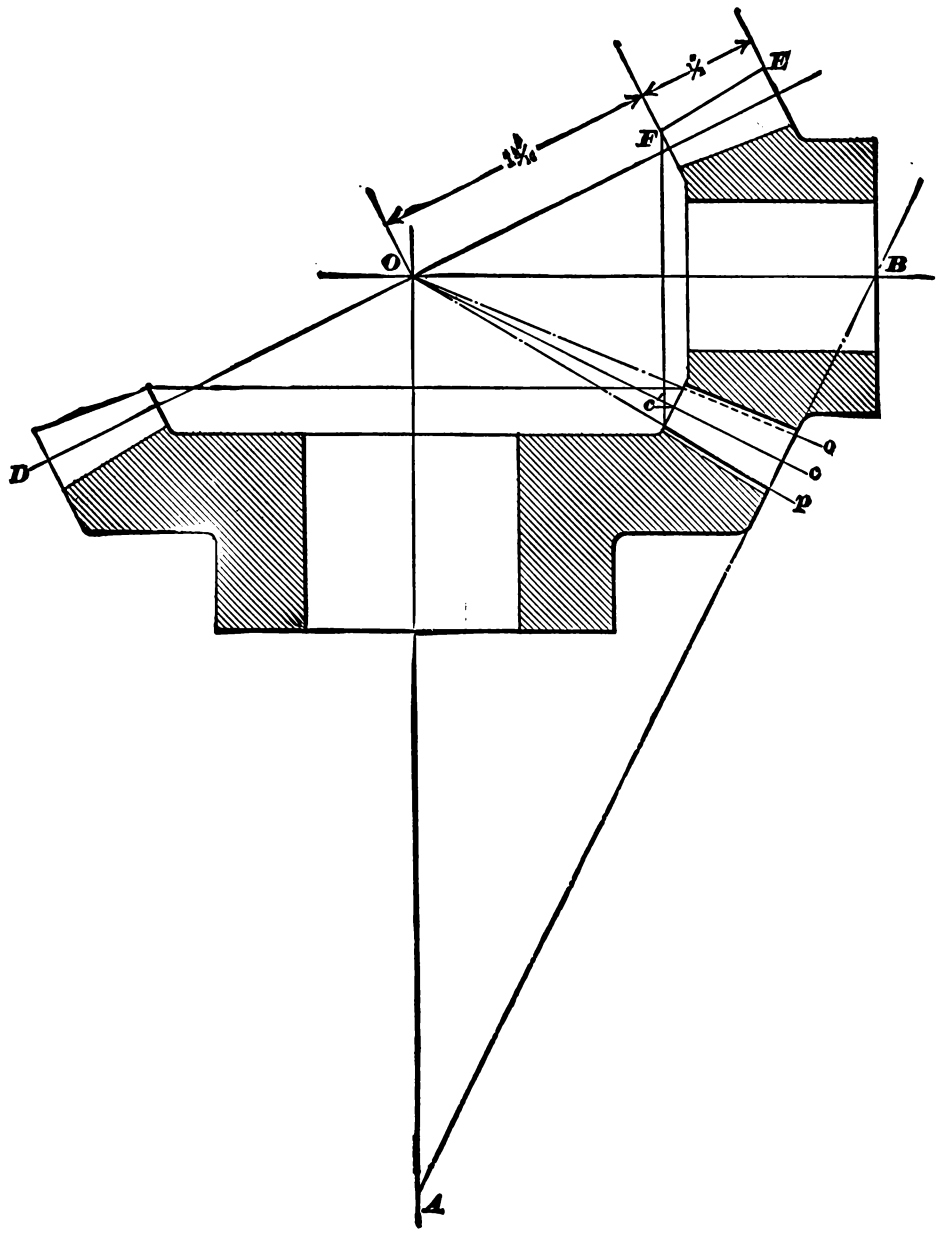

Fig. 2090.

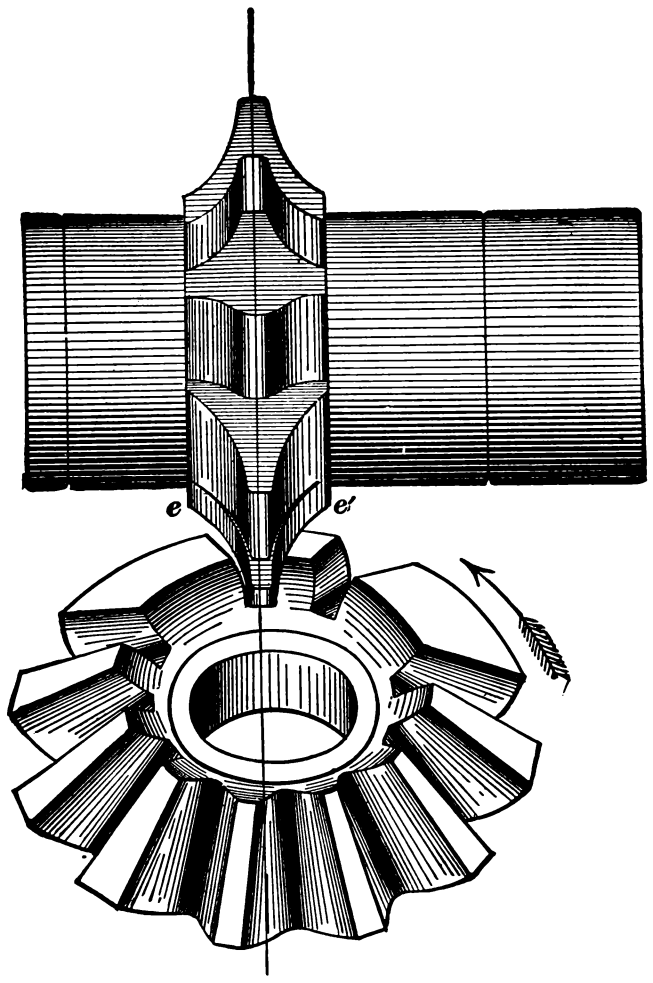

Fig. 2091.

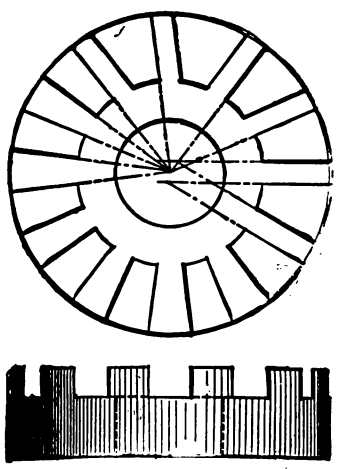

Fig. 2093.

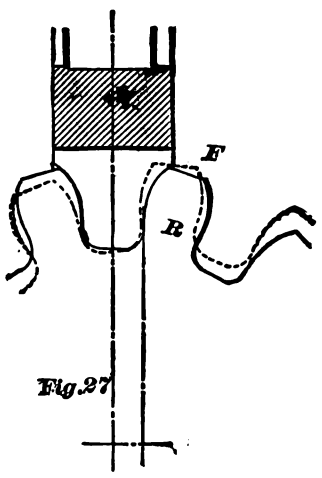

Fig. 2094.

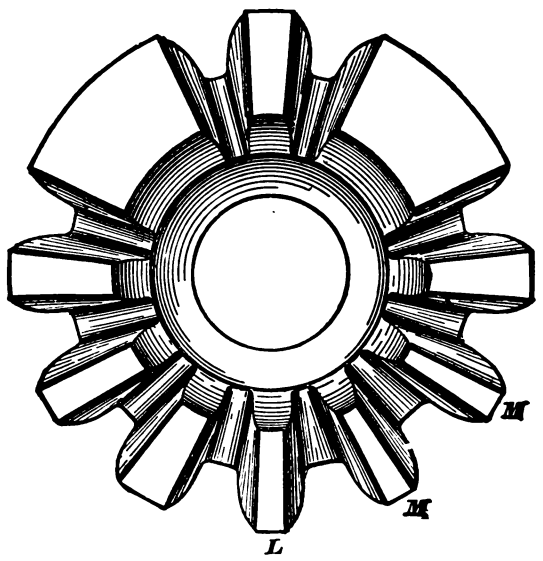

Fig. 2092.

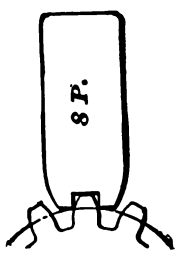

Fig. 2096.

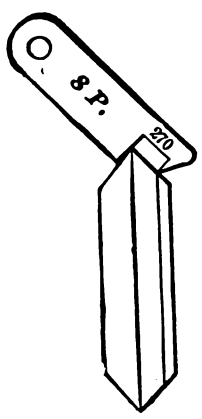

Fig. 2097.

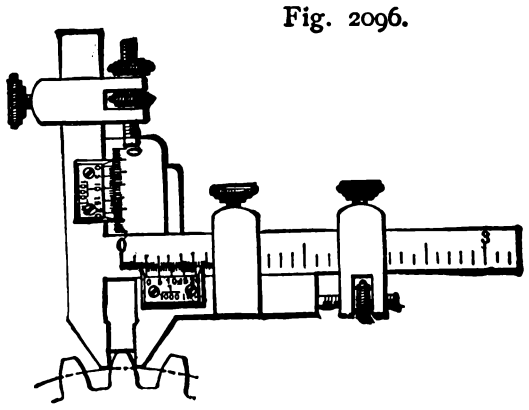

Fig. 2098.

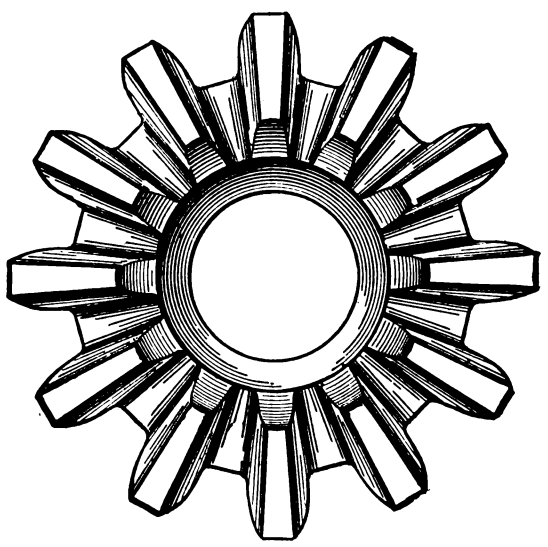

Fig. 2095.

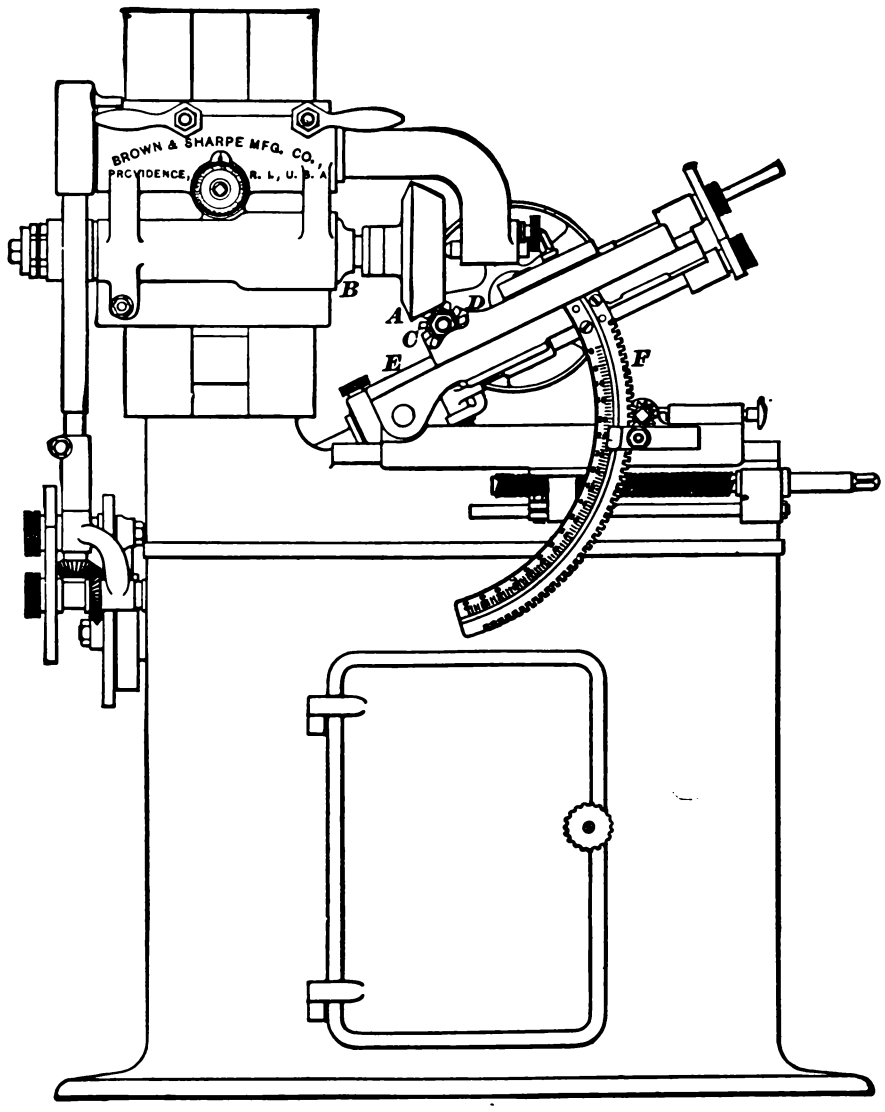

Fig. 2099.

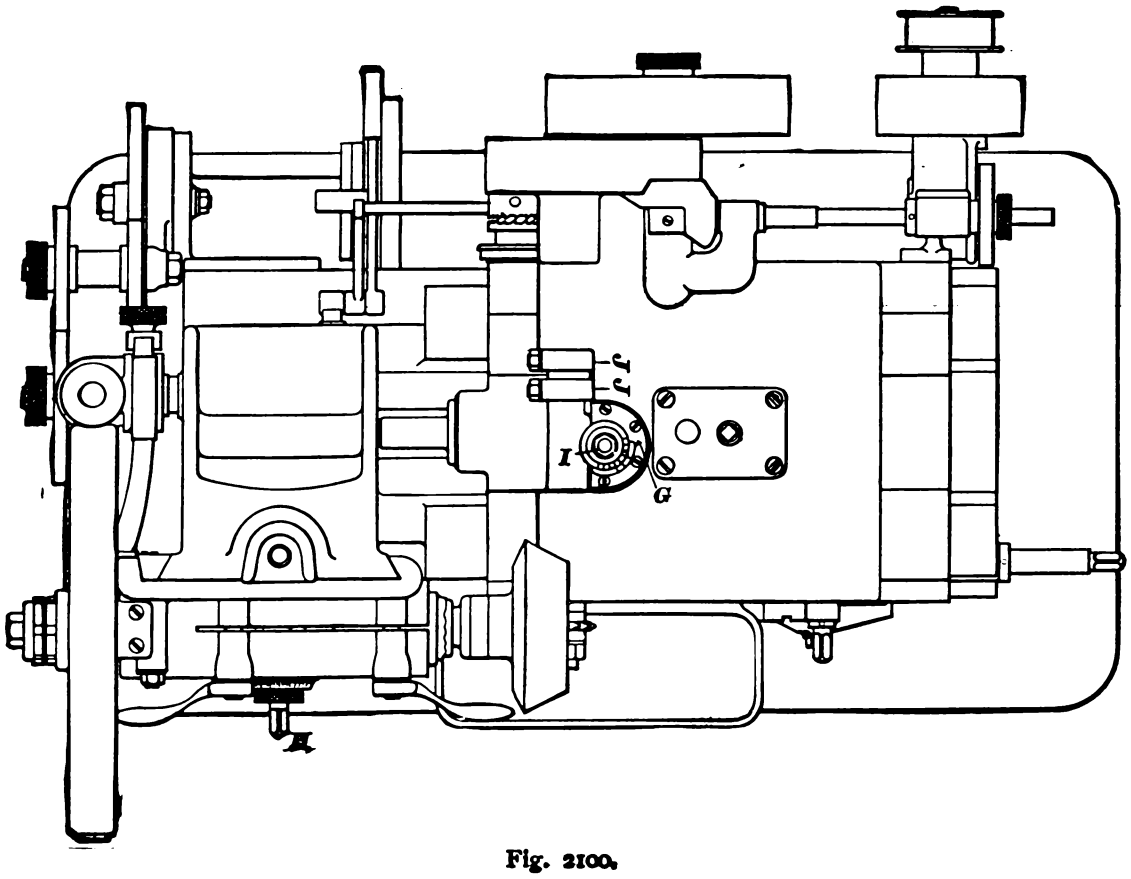

Fig. 2100.

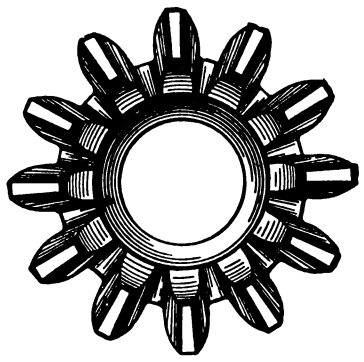

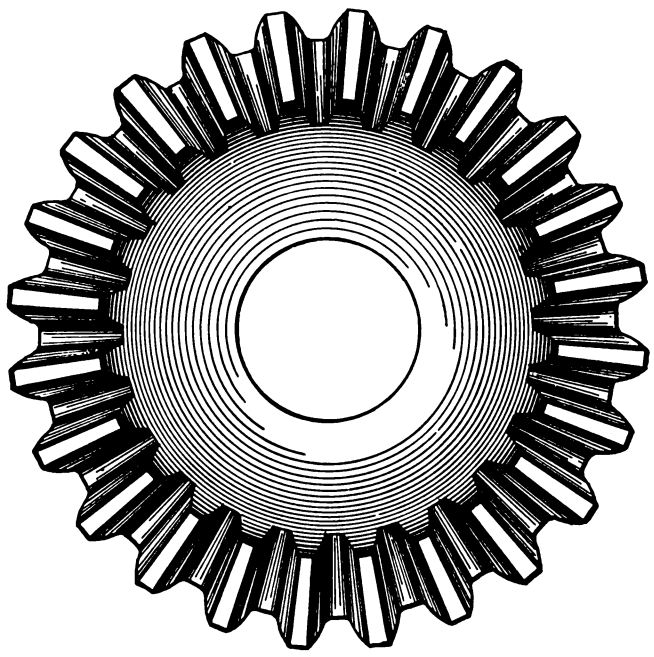

Fig. 2101.

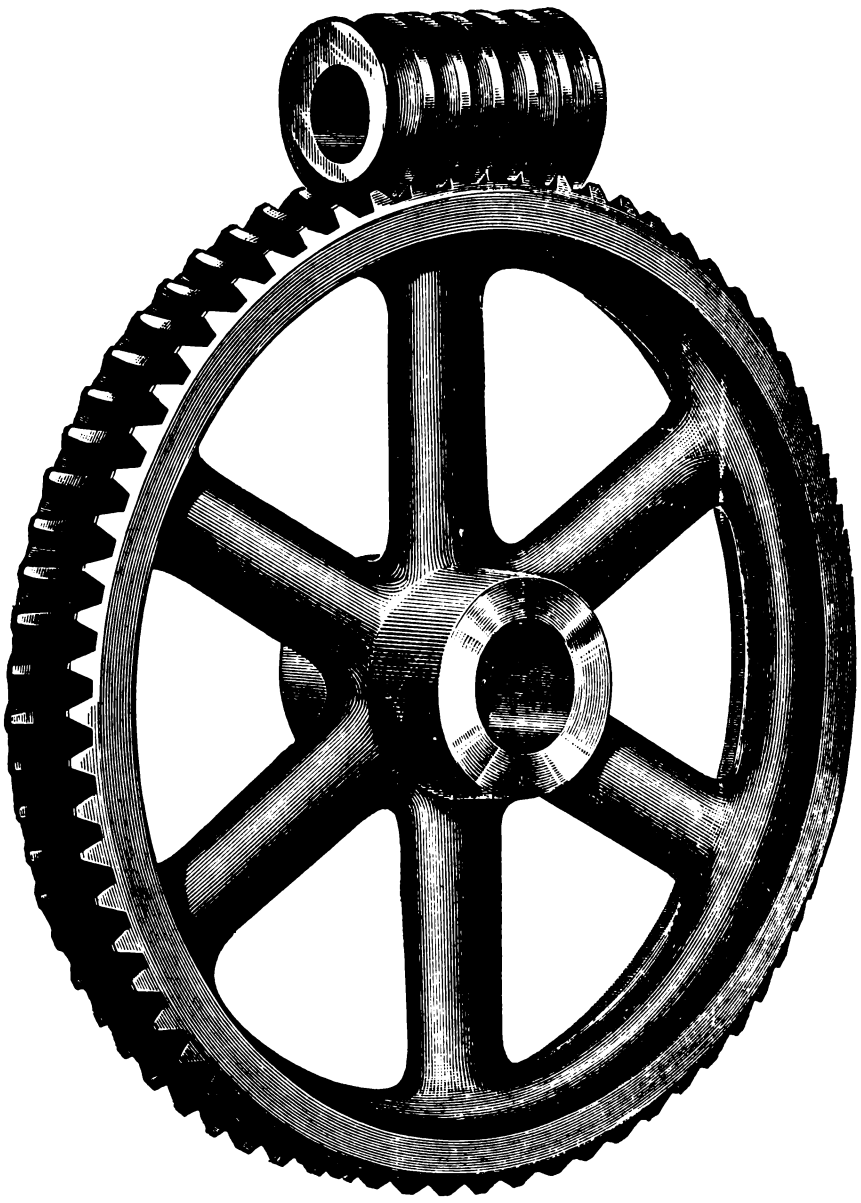

Fig. 2102.

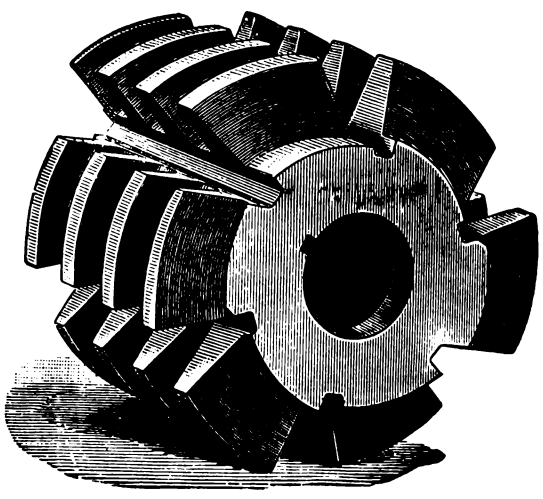

Fig. 2104.

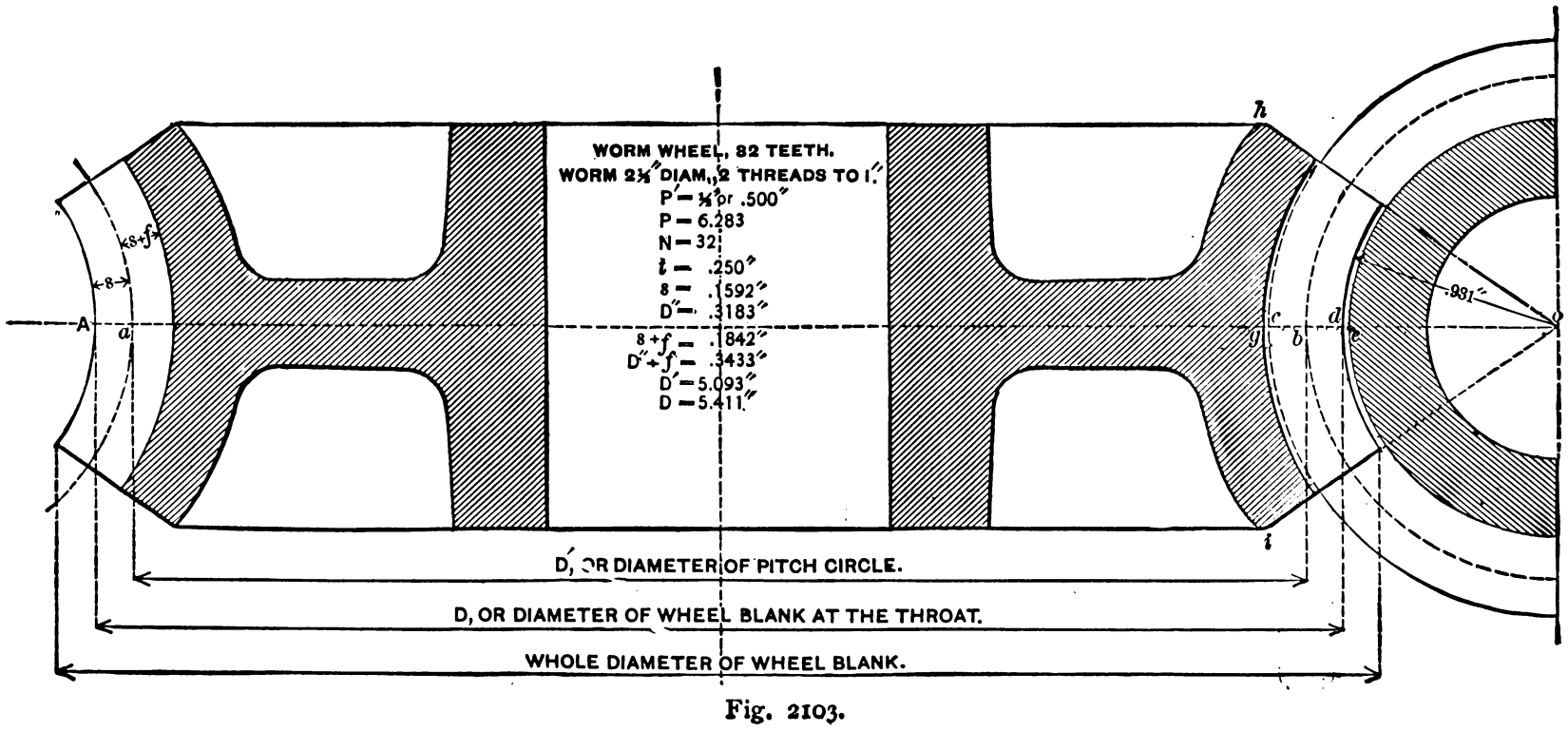

Fig. 2103.

thin at the face and left rather thick at the root. This tendency is greater as a cutting angle B O *o*, Fig. 2090, is smaller, or as a bevel gear approaches a spur gear, because when the cutting angle is small the blank must be rotated through a greater arc in order to set to cut the right thickness at the outer pitch circle. This can be understood by Figs. 2093 and 2094. Fig. 2093 is a radial-toothed clutch, which for our present purpose can be regarded as one extreme of a bevel gear in which the teeth are cut square with the axis: the dotted lines indicate the different positions of the cutter, the side of a tooth being finished by the side of the cutter that is on the centre line. In setting to cut these teeth there is the same side adjustment and rotation of the spindle as in a bevel gear, but there is no tendency to make a tooth thinner at the face than at the root. On the other hand, if we apply these same measurements to a spur gear and cutter, Fig. 2094, we shall cut the face F much thinner without materially changing the thickness of the root R.

Almost all bevel gears are between the two extremes of Figs. 2093 and 2094, so that when the cutting angle B O *o*, Fig. 2090, is smaller than about 30 degrees, this change in the form of the spaces, caused by the rotation of the blank, may be so great as to necessitate the substitution of a cutter that is narrower at *e e'*, Fig. 2091, than is called for by the way of figuring that we have just given: thus we might cut the pinion with a No. 6 cutter, instead of a No. 8. The No. 6, being for 17 to 20 teeth, cuts the tooth sides with a longer radius of curvature than the No. 8, which may necessitate considerable filing at the small ends of the teeth in order to round them over enough. Fig. 2095 shows the same gear as Fig. 2092, but in this case the teeth have all been filed similar to M M, Fig. 2092.

Different workmen prefer different ways to compromise in the cutting of a bevel gear. When a blank is rotated in adjusting to finish the large end of the teeth there need not be much filing of the small end, if the cutter is right, for a pitch circle of the radius B *c*, Fig. 2090, which for our example is a No. 8 cutter, but the tooth faces may be rather thin at the large ends. This compromise is preferred by nearly all workmen, because it does not require much filing of the teeth.

The sizes of an 8-pitch tooth part, Fig. 2090, at the large end, are copied from the table of spur gear teeth. The O *c'* is seven-tenths of the *apex distance* O *c*, so that the sizes of the tooth parts at the small end, except *f*, are seven-tenths the large. The order for cutting these gears goes to the workmen in this form:

LARGE GEAR.

P = 8
N = 24

D'' + *f* = .270''	D''' + *f* = .195''
t = .196''	*t'* = .137''
s = .125''	*s'* = .087''

Cutting Angle = 59° 10'

SMALL GEAR.

N = 12

Cutting Angle = 22° 18'

Fig. 2099 is a side view of a gear-cutting machine. A bevel gear blank A is held by the index spindle B. The cutter C is carried by the cutter slide D. The cutter slide carriage E can be set to the cutting angle, the degrees being indicated on the quadrant F.

Fig. 2100 is a plan of the machine. In this view the cutter slide carriage, in order to show the details a little plainer, is not set to an angle.

Before beginning to cut, the cutter is set central with the index spindle and the dial G is set to zero, so that we can adjust the cutter to any required distance out of centre, in either direction. Set the cutter slide carriage E, Fig. 2099, to the cutting angle of the gear, which for 24 teeth is 59 degrees 10 minutes; the quadrant being divided to half degrees, we estimate the 10 minutes or $\frac{1}{6}$ degree more than 59 degrees. Mark the depth of the cut at the outside, as in Fig. 2097. It is also well enough to mark the depth at the inside as a check. The thickness of the teeth at the large end is conveniently determined by the solid tooth gauge, Fig. 2096. The gear tooth vernier caliper, Fig. 2098, will measure the thickness of teeth up to two diametral pitch. In the absence of the vernier caliper we can file a gauge similar to Fig. 2097 to the thickness of the teeth at the small end.

The index having been set to divide to the right number, we cut two spaces central with the blank, leaving a tooth between that is a little too thick, as in the upper part of Fig. 2092. If the gear is of cast iron and the pitch is not coarser than about five diametral, this is as far as we go with the central cuts, and we proceed to set the cutter and the blank to finish first one side of the teeth and then the other, going around only twice. The tooth has to be cut away more in proportion from the large than from the small end, which is the reason for setting the cutter out of centre, as in Fig. 2093.

It is important to remember that the part of the cutter that is finishing one side of a tooth at the pitch line should be central with the gear blank, in order to know at once in which direction to set the cutter out of centre. We cannot readily tell how much out of centre to set the cutter until we have cut and tried, because the same part of a cutter does not cut to the pitch line at both ends of a tooth. As a trial distance out of centre we can take about one-tenth to one-eighth of the thickness of the teeth at the large end. The actual distance out of centre for the 12-tooth pinion is .021 inch; for the 24-tooth gear, .030 inch.

After a little practice a workman can set his blank the trial distance out of centre, and take his first cuts, without any central cuts at all; but it is safer to take central cuts like the upper ones in Fig. 2092. The depth of cut is partly controlled by the index spindle raising dial shaft H, Fig. 2100, which determines the height of the index spindle, and partly by the position of the cutter spindle. We now set the cutter out of centre the trial distance by means of the cutter spindle dial shaft I, Fig. 2100. The trial distance can be about one-tenth the thickness of the tooth at the large end in a 12-tooth pinion, and from that to one-eighth the thickness in a 24-tooth gear and larger. The principle of trimming the teeth more at the large end than at the small is illustrated in Fig. 2091, which is to move the cutter away from the tooth to be trimmed, and then to bring the tooth up against the cutter by rotating the blank in the direction of the arrow.

The rotative adjustment of the index spindle is accomplished by loosening the connection between the index worm and the index drive, and turning the worm; the connection is then fastened again. The cutter is now set the same distance out of centre in the other direction, and the index spindle is adjusted to trim the other side of the tooth until one end is down nearly to the right thickness. If now the thickness of the small end is in the same proportion to the large end as O *c'* is to O *c*, Fig. 2090, we can at once adjust to trim the tooth to the right thickness. But if we find that the large end is still going to be too thick when the small end is right, the out of centre must be increased.

It is well to remember this: too much out of centre leaves the small end proportionally too thick, and too little out of centre leaves the small end too thin.

After the proper distance out of centre has been learned, the teeth can be finish-cut by going around out of centre first on one side and then on the other without cutting any central spaces at all. The cutter spindle stops, J J, can now be set to control the out of centre of the cutter, without having to adjust by the dial G. If, however, a cast-iron gear is 5 pitch or coarser it is usually well to cut central spaces first and then take the two out-of-centre cuts, going around three times in all. Steel gears should be cut three times around.

Blanks are not always turned nearly enough alike to be cut without a different setting for different blanks. If the hubs vary in length the position of the cutter spindle has to be varied. In thus varying, the same depth of cut or the exact D'' + *f* may not always be reached. A slight difference in the depth is not so objectionable as the incorrect tooth thickness that it may cause. Hence, it is well, after cutting once around and finishing one side of the teeth, to give careful attention to the rotative adjustment of the index spindle so as to cut the right thickness.

After a gear is cut, and before the teeth are filed, it is not always

a very satisfactory looking piece of work. In Fig. 2092 the tooth L is as the cutter left it, and is ready to be filed to the shape of the teeth M M, which have been filed. Fig. 2101 is the pair of gears that we have been cutting; the teeth of the 12-tooth pinion have been filed.

A second approximation in cutting with a rotary cutter is to widen the spaces at the large end by swinging either the index spindle or the cutter slide carriage, so as to pass the cutter through on an angle with the blank sideways, called the *side angle*, and not rotate the blank at all to widen the spaces. This side angle method is employed in the No. 2 automatic mitre gear-cutting machine: it is available in the manufacture of mitre gears in large quantities, because, with the proper relative thickness of cutter, the tooth thickness comes right by merely adjusting for the side angle; but for cutting a few gears it is not much liked by workmen, because, in adjusting for the side angle, the central setting of the cutter is usually lost, and has to be found by guiding into the central slot already cut. If the side angle mechanism pivots about a line that passes very near the small end of the tooth to be cut, the central setting of the cutter may not be lost. With this method a gear must be cut at least twice around; in widening the spaces at the large end, the teeth are narrowed practically the same amount at the root as at the face, so that this side angle method requires a wider cutter at *e e'*, Fig. 2091, than the first, or rotative, method. The amount of filing required to correct the form of the teeth at the small end is about the same as in the first method.

A third approximate method consists in cutting the teeth right at the large end by going around at least twice, and then to trim the teeth at the small end and toward the large with another cutter, going around at least four times in all. This method requires skill and is necessarily a little slow, but it contains possibilities for considerable accuracy.

A fourth method is to have a cutter fully as thick as the spaces at the small end, cut rather deeper than the regular depth at the large end, and go only once around. This is a quick method, but more inaccurate than the three preceding: it is available in the manufacture of large numbers of gears when the tooth face is short compared with the apex distance. It is little liked, and seldom employed in cutting a few gears: it may require some experimenting to determine the form of cutter. Sometimes the teeth are not cut to the regular depth at the small end in order to have them thick enough, which may necessitate reducing the addendum of the teeth, *s'*, at the small end by turning the blank down. This method is extensively employed by chuck manufacturers.

A machine that cuts bevel gears with a reciprocating motion, and using a tool similar to a planer tool, is called a gear planer, and the gears so cut are said to be *planed*.

One form of gear planer is that in which the principle embodied is theoretically correct; this machine originates the tooth curves without a former. Another form of the same class of machines is that in which the tool is guided by a former.

Usually the time consumed in planing a bevel gear is greater than the time necessary to cut the same gear with a rotary cutter, thus proportionately increasing the cost.

Pitches coarser than 4 are more correct and sometimes less expensive when planed; it is hardly practicable, and certainly not economical, to cut a bevel gear as coarse as 3 P. with a rotary cutter. In gears as fine as 16 P. planing affords no practical gain in quality.

While planing is theoretically correct, yet the wearing of the tool may cause more variation in the thickness of the teeth than the wearing of a rotary cutter, and even a planed gear is sometimes improved by filing. If gears are not correctly mounted in the place where they are to run, they might as well not be planed. In fact, after taking pains in the cutting of any gear, when we come to the mounting of it we should keep right on taking pains.

The method of obtaining the sizes and angles pertaining to bevel gears by measuring a drawing is quite convenient, and with care is fairly accurate. Its accuracy depends, of course, upon the careful measuring of a good drawing. We may say, in general, that in measuring a diagram, while we can hardly obtain data mathematically exact, we are not likely to make wild mistakes.

WORM GEARS.—A worm is a screw made to mesh with the teeth of a wheel called a *worm-wheel*. A section of a worm through its axis is, in outline, the same as a rack of corresponding pitch. This outline can be made either to mesh with single or double curve gear teeth; but worms are usually made for single curve, because, the sides of involute rack teeth being straight, the tool for cutting worm thread is more easily made. The thread tool is not usually rounded for giving fillets at bottom of worm thread.

The rules for circular pitch apply in the size of tooth parts and diameter of pitch circle of worm-wheel.

The pitch of a worm or screw is usually given in a way different from the pitch of a gear, viz.: in number of threads to one inch of the length of the worm or screw. Thus, if we say a worm is two pitch we mean two threads to the inch, or the worm makes two turns to advance the thread one inch. But a worm may be double threaded, triple threaded, and so on.

To avoid misunderstanding, it is better always to call the advance of the worm thread the *lead*. Thus, a worm thread that advances one inch in one turn we call one-inch *lead* in one turn. A single thread worm 4 to 1 inch is $\frac{1}{4}$-inch lead. We apply the term "pitch" to the actual distance between the threads or teeth. In single thread worms the lead and the pitch are alike. If we have to make a worm and wheel so many threads to one inch, we first *divide one inch by the number of threads to one inch*, and the quotient *gives us the circular pitch*. Hence, the wheel in Fig. 2103 is $\frac{1}{2}$ inch circular pitch. The term *linear pitch* expresses exactly what is meant by circular pitch. Linear pitch has the advantage of being an exact use of language when applied to worms and racks. The number of threads to one inch linear, is the reciprocal of the linear pitch.

Multiply 3.1416 by the number of threads to one inch, and the product will be the diametral pitch of the worm-wheel. Thus, we would say of a double thread worm advancing 1 inch in $1\frac{1}{3}$ turns that:

Lead$=\frac{3}{4}$ inch or .75 inch. Linear pitch or P'$=\frac{3}{8}$ inch or .375 inch.

Diametral pitch or P=8.377.

To make drawing of worm and wheel we obtain data as in circular pitch.

1. Draw centre line A O and upon it space off the distance *a b* equal to the diameter of pitch circle.
2. On each side of these two points lay off the distance *s*, or the usual addendum$=\frac{1}{P}$ inch, as *b c* and *b d*.
3. From *c* lay off the distance *c* O equal to the radius of the worm. The diameter of a worm is generally four or five times the circular pitch.
4. Lay off the distances *c g* and *d e* each equal to *f*, or the usual clearance at bottom of tooth space.
5. Through *c* and *e* draw circles about O. These represent the whole diameter of worm and the diameter at bottom of worm thread.
6. Draw *h* O and *i* O at an angle of from 30 degrees to 45 degrees with A O. These lines give width of face of worm-wheel.
7. Through *g* and *d* draw arcs about O, ending in *h* O and *i* O.

This operation repeated at *a* completes the outline of worm-wheel. For 32 teeth and more, the addendum diameter, or D, should be taken at the throat or smallest diameter of wheel, as in Fig. 2103.

The foregoing instructions and sketch are for cases where the teeth of the wheels are finished with a *hob*.

A hob is shown in Fig. 2104, being a steel piece threaded with the same tool that threads the worm, then grooved to make teeth for cutting, and hardened.

The whole diameter of hob should be at least 2 *f*, or twice the clearance larger than the worm. In relieved hobs the diameter should be made still larger in order to give the proper clearance. The outer corners of hob thread can be rounded down as far as the clearance distance. The width at top of the hob thread before rounding should be .31 of the linear, or circular pitch=.31 P'. The whole depth of thread should be the ordinary working depth plus the clearance=D''+*f*. The diameter at bottom of hob thread should be 2*f* larger than the diameter at bottom of worm thread. The thickness of cutter for grooving small hobs, say, less than two

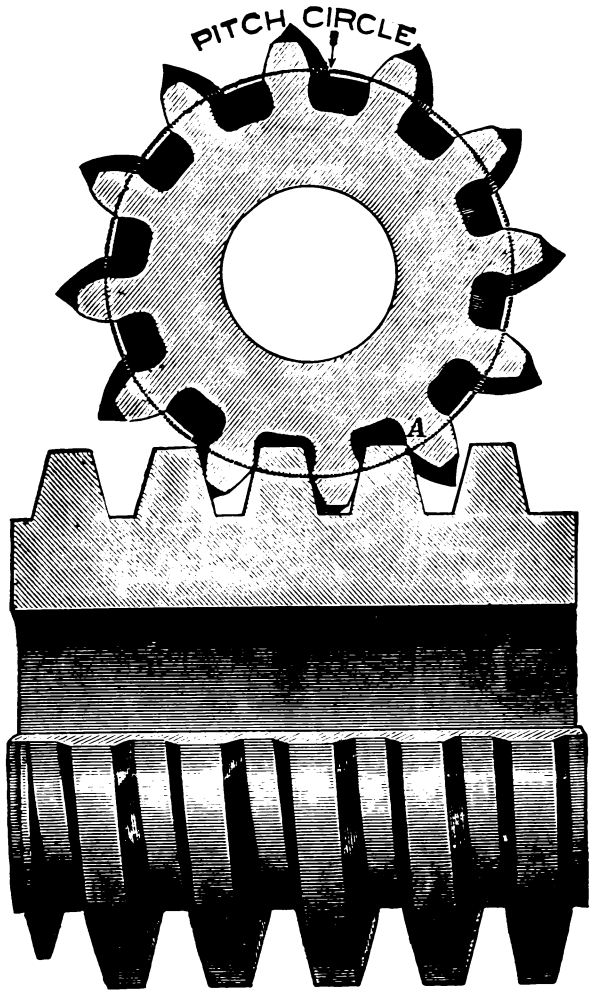

Fig. 2105.

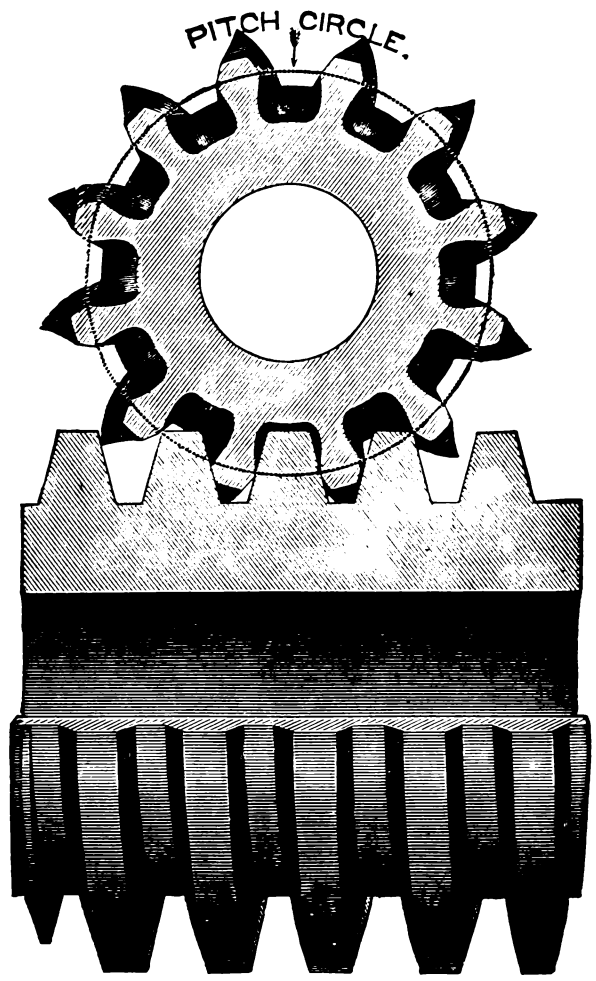

Fig. 2106.

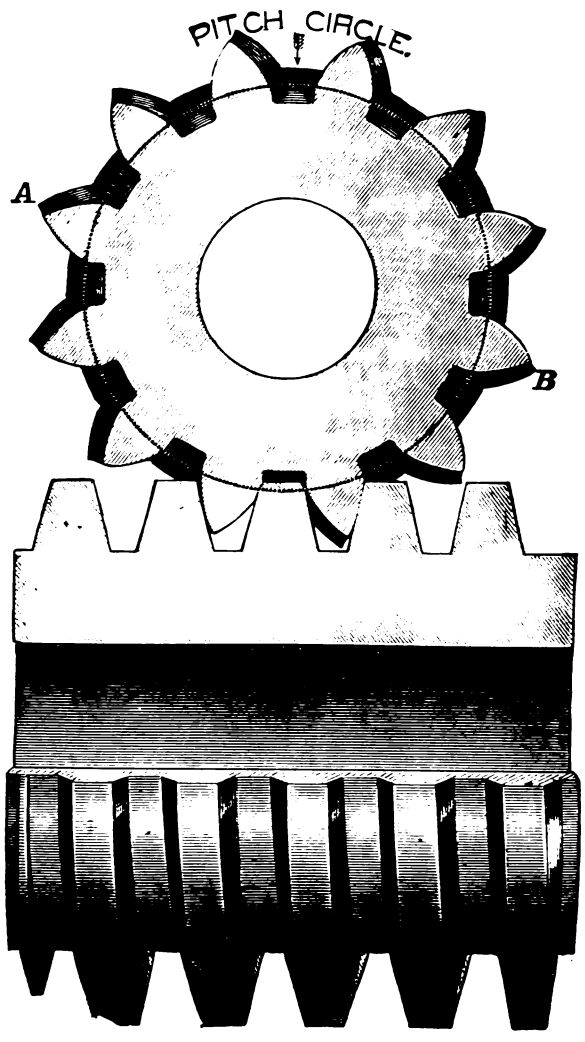

Fig. 2107.

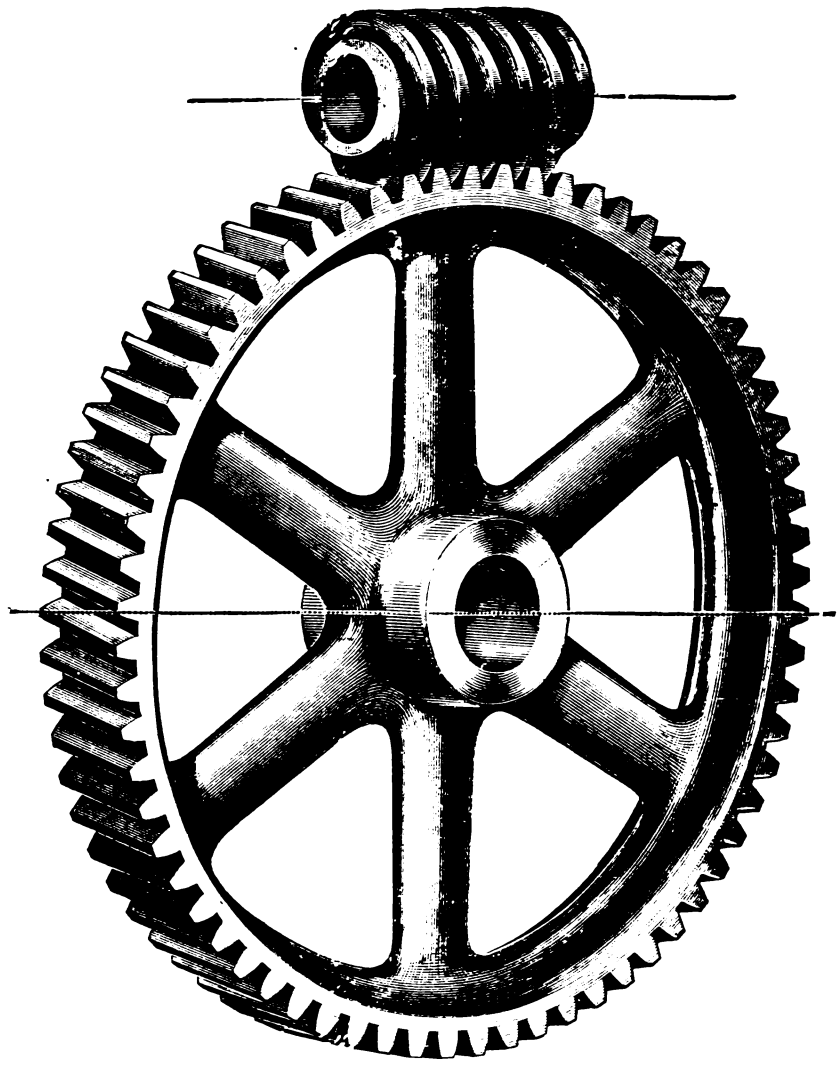

Fig. 2108.

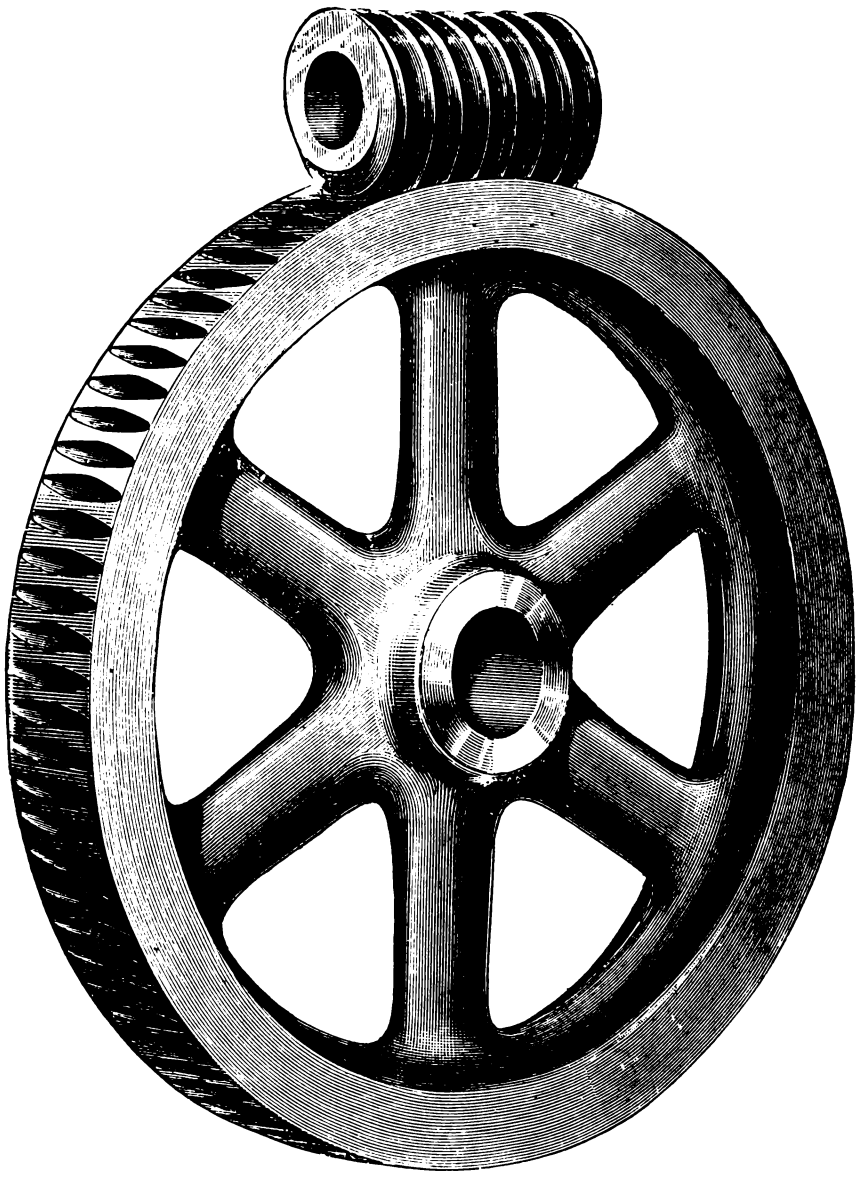

Fig. 2109.

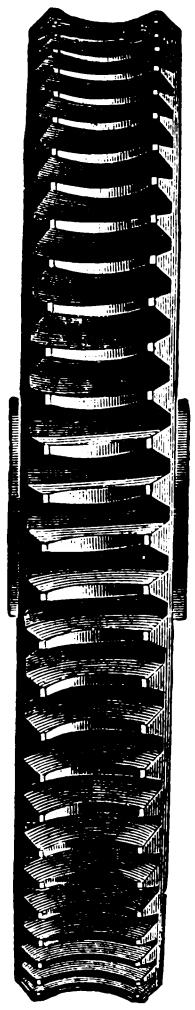

Fig. 2110.

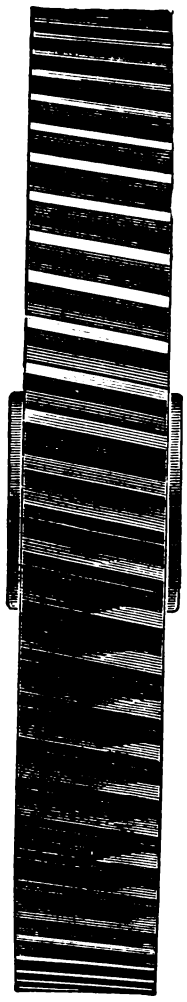

Fig. 2110*a*.

Fig. 2110*b*.

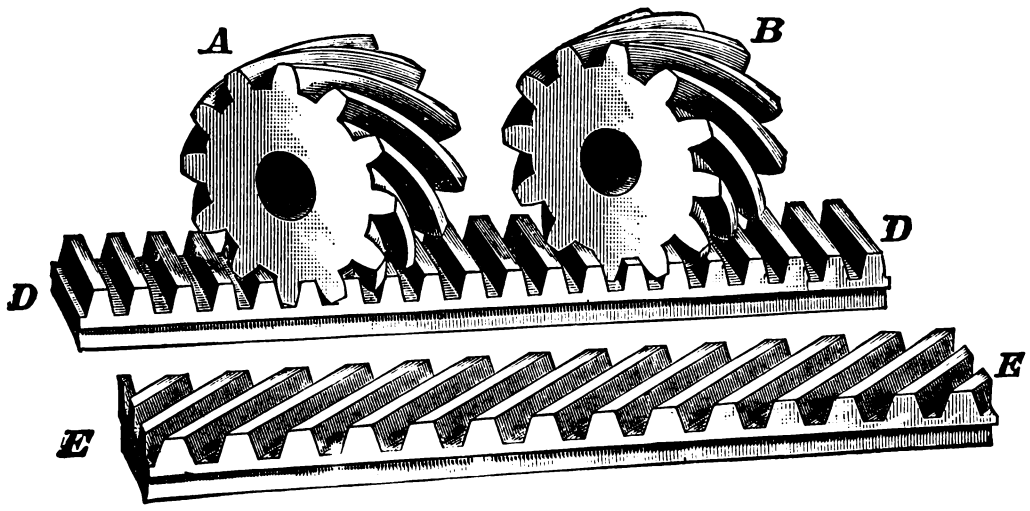

Fig. 2111.

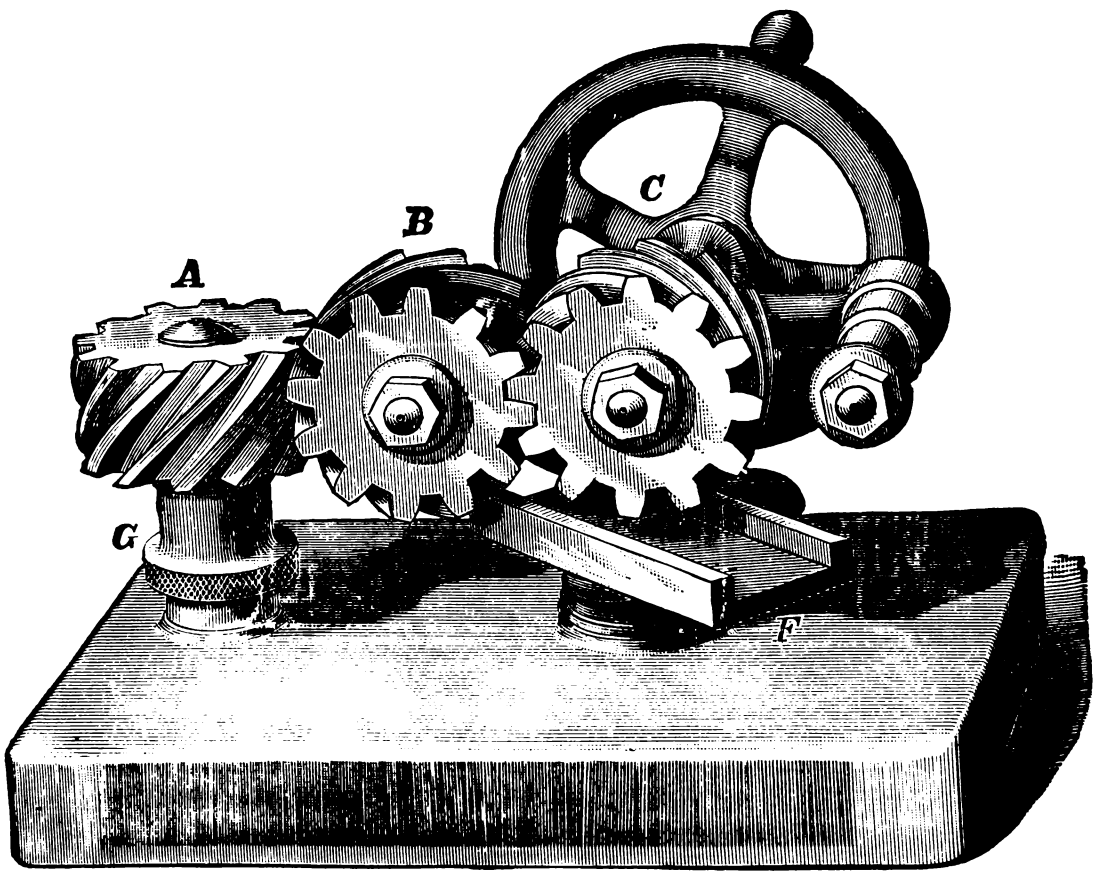

Fig. 2112.

inches in diameter, can be about $\frac{1}{2}$ the width of thread at top plus $\frac{1}{8}'' = \cdot\frac{2}{3}\frac{3}{5}\frac{1}{2}' + \frac{1}{8}''$. The width of lands at the bottom can be about the depth of thread plus $\frac{1}{8}'' = D'' + 2f + \frac{1}{8}''$. The grooves are usually cut with a round-edge cutter, the parallel part of cutter just reaching the bottom of thread, making the half-round bottom of grooves below the bottom of thread. In small hobs, the teeth are often not relieved between the grooves. In large hobs, or those more than three inches in diameter, the teeth may be cut with radial faces, cutting the space wider at the outer part so as to leave the faces and backs of teeth about parallel, and the teeth should be relieved. This can be done in the universal milling machine. A common way in hobs two to three inches in diameter, is to relieve with a file.

The teeth of the wheel are first cut as nearly to the finished form as practicable ; the hob and worm-wheel are mounted upon shafts and hob placed in mesh as in Fig. 2102. The hob is now made to rotate, and is dropped deeper into the wheel at each revolution of the wheel until teeth are finished. The hob generally drives the worm-wheel during this operation. The universal milling machine is very convenient for doing this work, and with it the distance between axes of worm and wheel can be readily noted. There are machines for hobbing wheels, in which the work spindle is driven by gearing so that the hob does not have to do the work of driving the wheel. The object of hobbing a wheel is to get more bearing surface of the teeth upon worm thread. The worm-wheels, Figs. 2102 and 2110, were hobbed. By hobbing we produce outline of teeth something like the thread of a nut.

If we make the diameter of a worm-wheel blank—that is, to have less than 30 teeth, by the common rules for sizing blanks—and finish the teeth with a hob, we shall find the flanks of teeth near the bottom to be *undercut* or hollowing. This is caused by the interference, already referred to. Thirty teeth was then given as a limit, which will be right when teeth are made to circle arcs. With pressure angle $75\frac{1}{2}$ degrees, and rack teeth with usual addendum, this interference of rack teeth with flanks of gear teeth commences at 31 teeth ($31\frac{7}{10}$ geometrically), and interferes with nearly the whole flank in wheel of 12 teeth.

In Fig. 2105 the blank for worm-wheel of 12 teeth was sized by the same rule as given for Fig. 2103. The wheel and worm are sectioned to show shape of teeth at the midplane of wheel. The flanks of teeth are undercut by the hob. The worm thread does not have a good bearing on flanks inside of A, the bearing being that of a corner against a surface.

In Fig. 2106 the blank for wheel was sized so that pitch circle comes midway between outermost part of teeth and innermost point obtained by worm thread.

This rule for sizing worm-wheel blanks has been in use to some extent. The hob has cut away flanks of teeth still more than in Fig. 2105. The pitch circle in Fig. 2106 is the same diameter as the pitch circle in Fig. 2105. The same hob was used for both wheels. The flanks in this wheel are so much undercut as to materially lessen the bearing surface of teeth and worm thread.

In the previous remarks the interference of teeth in high-numbered gears and racks with flanks of 12 teeth was remedied by rounding off the addenda. Although it would be more systematic to round off the threads of a worm, making them, like rack teeth, to mesh with interchangeable gears, yet this has not generally been done, because it is easier to make a worm-thread tool with straight sides.

Instead of cutting away the addenda of worm thread, we can avoid the interference with flanks of wheels having less than 30 teeth by making wheel blanks larger.

The flanks of wheel in Fig. 2107 are not undercut, because the diameter of wheel is so large that there is hardly any tooth inside the pitch circle. The pitch circle in Fig. 2107 is the same size as pitch circles in Figs. 2105 and 2106. This wheel was sized by the following rule : Multiply the *pitch diameter* of the wheel by .937, and add to the product four times the addendum ($4\,s$) ; the sum will be the diameter for the blank at the throat or small part. To get the whole diameter, make a sketch with diameter of throat to the foregoing rule and measure the sketch.

It is impracticable to hob a wheel of 12 to about 16 or 18 teeth when blank is sized by this rule, unless the wheel is driven by independent mechanism and not by the hob. The diameter across the outermost parts of teeth, as at A B, is considerably less than the largest diameter of wheel before it was hobbed.

In general it is well to size all blanks, as by Figs. 2103 and 2105, when the wheels are to be hobbed. Of course, if the wheel is to be hobbed, the cutter should be thin enough to leave stock for finishing. The spaces can be cut the full depth, the cutter being dropped in.

To get angle of worm thread, it is best to apply protractor directly to the thread, as computing the angle affords but little help. Set gear-cutter head as near the angle as can be seen from trial with protractor upon thread ; cut a few teeth ; try in worm. Generally the cutter head has to be changed before the worm will take the right position.

When worm-wheels are not hobbed it is better to turn blanks like a spur wheel. Little is gained by having wheels curved to fit worm unless teeth are finished with a hob. The teeth can be cut in a straight path diagonally across face of blank, to fit angle of worm thread, as in Figs. 2108 and 2110*a*.

For dividing wheels to gear-cutting engines the blanks are turned like a spur wheel and a cutter about $\frac{1}{16}$ inch larger diameter than the worm, is dropped in, as in Figs. 2109 and 2110*b*, and the worm thread is slightly rounded at the outer corners. The radius for rounding thread can be $\frac{1}{4}$ the width of thread at the top.

With an accurate cutting engine we have found wheels like Figs. 2109 and 2110*b*, not hobbed, every way satisfactory. Dividing wheels of 2 feet diameter and less are generally made without arms, the part between hub and rim being a solid web. As to the different wheels, Figs. 2110, 2110*a*, and 2110*b*, when worm is in right position at the start, the lifetime of Fig. 2110, under heavy and continuous work, will be the longest.

Fig. 2110*a* can be run in mesh with a gear or a rack as well as with a worm when made within the angular limits commonly required. Strictly, neither two gears made in this way, nor a gear and a rack would be mathematically exact, as they might bear on the sides of the gear or at the ends of the teeth only and not in the middle. At the start the contact of teeth in this wheel upon worm thread is in points only ; yet such wheels have been many years successfully used in elevators.

Fig. 2110*b* is a neat looking wheel. In gear-cutting engines, where the workman has occasion to turn the work spindle by hand, it is not so rough to take hold of as Figs. 2110 and 2110*a*.

Some designers prefer to take off the outermost part of teeth in wheels (Figs. 2102 and 2110), as shown in these two figures, and not leave them sharp, as in Fig. 2108.

SPIRAL GEARS—CALCULATIONS FOR PITCH OF SPIRALS.—When the teeth of a gear are cut, not in a straight path, like a spur gear, but in a helical or screw-like path, the gear is called, technically, a twisted or screw gear, but more generally, among mechanics, a spiral gear. A distinction is sometimes made between a screw gear and a twisted gear. In twisted gears the pitch surfaces roll upon each other, exactly like spur gears, the axes being parallel. In screw gears there is an end movement, or slipping of the pitch surfaces upon each other, the axes not being parallel. In screw gearing the action is analogous to a screw and nut, one gear driving another by the end movement of its tooth path. This is readily seen in the case of a worm and worm-wheel, when the axes are at right angles, as the movement of wheel is then wholly due to the end movement of worm thread. But as we make the axes of gears more nearly parallel, they may still be screw gears, but the distinction is not so readily seen.

We can have two gears that are alike run together, with their axes at right angles, as at A B, Fig. 2112.

The same gear may be used in a train of screw gears or in a train of twisted gears. Thus, B, as it relates to A, may be called a screw gear ; but in connection with C, the same gear, B, may be called a twisted gear. These distinctions are not usually made, and we call all helical or screw-like gears made on the universal milling machine *spiral gears*.

When two external spiral gears run together, with their axes parallel, the teeth of the gears must have opposite hand spirals.

Thus, in Fig. 2112, the gear B has right-hand spiral teeth, and the gear C has left-hand spiral teeth. When the axes of two

spiral gears are at right angles, both gears must have the same hand spiral teeth. A and B, Fig. 2112, have right-hand spiral teeth. If both gears A and B had left-hand spiral teeth, the relative direction in which they turn would be reversed.

The spiral or pitch of spiral is the distance the spiral advances in one turn. Strictly, this is the *lead* of the spiral. A cylinder or gear cut with spiral grooves is merely a screw of coarse pitch or long lead ; that is, a spiral is a coarse-pitch screw, and a screw is a fine-pitch spiral.

In screws the pitch is often given as so many threads to one inch ; thus, a screw of $\frac{1}{2}$-inch lead is said to be two threads to the inch. The reciprocal expression is not much used with spirals. For example, it would not be convenient to speak of a spiral of 6 inches lead as $\frac{1}{6}$ thread to one inch.

The calculations for spirals are made from the functions of a right-angle triangle.

Cut from paper a right-angle triangle, one side of the right angle 6 inches long, and the other side of the right angle 2 inches. Make a cylinder 6 inches in circumference. It will be remembered that the circumference of a cylinder, multiplied by .3183, equals the diameter—6 inches × .3183=1.9098 inches. Wrap the paper triangle around the cylinder, letting the 2-inch side be parallel to the axis, and the 6-inch side perpendicular to the axis and reaching around the cylinder. The hypothenuse now forms a helix or screw-like line, called a spiral. Fasten the paper triangle thus wrapped around. (See Fig. 2113).

If we now turn this cylinder A B C D in the direction of the arrow, the spiral will advance from O to E. This advance is the *pitch of the spiral.*

The angle E O F, which the spiral makes with the axis E O, is the *angle of the spiral.* The circumference of the cylinder corresponds to the side *opposite the angle.* The pitch of the spiral corresponds to the side *adjacent the angle.* Hence the rule for getting angle of spiral :

Divide the circumference of the cylinder or spiral by the number of inches of spiral to one turn, and the quotient will be the tangent of angle of spiral.

When the angle of spiral and circumference are given, to find the pitch :

Divide the circumference by the tangent of angle, and the quotient will be the pitch of the spiral.

When the angle of spiral and the lead or pitch of spiral are given, to find the circumference :

Multiply the tangent of angle by the pitch, and the product will be the circumference.

When applying calculations to spiral gears the angle is reckoned at the pitch circumference and not at the outer or addendum circle.

It will be seen that when two spirals of different diameters have the same pitch the spiral of less diameter will have the smaller angle. Thus, in Fig. 2113, if the paper triangle had been 4 inches long instead of 6 inches, the diameter of the cylinder would have been 1.27 inches and the angle of the spiral would have been only $23\frac{1}{2}$ degrees.

When two spiral gears are in mesh the angle of spiral should be the same in one gear as in the other, in order to have the shafts parallel and the teeth work properly together. When two gears both have right-hand spiral teeth, or both have left-hand spiral teeth, the angle of their shafts will be equal to the *sum* of the angles of their spirals. But when two gears have different hand spirals the angle of their shafts will be equal to the *difference* of their angles of spirals. Thus, in Fig. 2112, the gears A and B both have right-hand spirals. The angle of both spirals is 45 degrees, their sum is 90 degrees, or their axes are at right angles. But C has a left-hand spiral of 45 degrees. Hence, as the difference between angles of spirals of B and C is 0, their axes are parallel.

When the two gears have the same number of teeth the pitch of the spiral will be alike in both gears. But when one gear has more teeth than the other the pitch of spiral in the larger gear should be longer in the same ratio. Thus, if one gear has 50 teeth and the other gear has 25 teeth, the pitch of spiral in the 50-tooth wheel should be twice as long as that of the 25-tooth wheel. Of course, the diameter of pitch circle should be twice as large in the 50-tooth as in the 25-tooth wheel.

In spirals where the angle is 45 degrees the circumference is the same as the spiral pitch, because the tangent of 45 degrees is 1.

Sometimes the circumference is varied to suit a pitch that can be cut on the machine and retain the angle required. This would apply to cutting rolls for making diamond-shaped impressions where the diameter of the roll is not a matter of importance.

When two gears are to run together in a given velocity ratio, it is well to first select spirals that the machine will cut of the same ratio, and calculate the numbers of teeth and angle to correspond. This will often save considerable time in figuring.

The calculations for spiral gears present no special difficulties, but sometimes a little ingenuity is required to make work conform to the machine and to cutters. It is a good plan to make a trial piece for each gear, and to cut a few teeth in each trial piece to test the setting of the machine. These trial pieces are called "dummies." If the gears are likely to be duplicated, each dummy can be marked and kept for future setting of the machine. Stamp all the data on the dummies ; it is better to spend a little time in marking dummies than a good deal of time hunting up, or trying to *remember*, old data.

Let it be required to make two spiral gears to run with a ratio of 4 to 1, the distance between centres to be 3.125 inches ($3\frac{1}{8}$ inches).

The diameters of pitch circles will be 5 inches and $1\frac{1}{4}$ inches. Let us take a spiral of 48 inches pitch for the large gear, and a spiral of 12 inches pitch for the small gear. The circumference of the 5-inch pitch circle is 15.70796 inches. Dividing the circumference by the pitch of the spiral, we have $\frac{15.70796}{48}$=.32724 inch for tangent of angle of spiral. In the table the nearest angle to tangent, .32724 inch, is 18 degrees 10 minutes. As before stated, the angle of the teeth in the small gear will be the same as the angle of teeth or spiral in the large gear. Now, this rule gives the angle at the pitch surface only. Upon looking at a small screw of coarse pitch, it will be seen that the angle at bottom of thread is not so great as the angle at top of thread ; that is, the thread at bottom is nearer parallel to the centre line than at the top.

This will be seen in Fig. 2114, where A O is the centre line ; *b f* shows direction of bottom of thread, and *d g* shows direction of top of thread. The angle A *f b* is less than the angle A *g d*. This difference of angle is due to the warped nature of a screw thread, and sometimes makes it necessary to change the angle for setting work from the figured angle, when a rotary disk cutter is used, to prevent the cutter from marring the groove as the teeth of cutter enter and leave. How much to change the angle can be seen by inspection when cutting the dummies. The change of angle will be more in a small gear of a given pitch than in a large gear of the same pitch.

A rotary disk cutter is generally preferable, because it cuts faster and holds its shape better. Yet it is hardly practical to cut low-numbered pinions with rotary disk cutters, because for some distance below the pitch line the spaces are so nearly parallel. A part of the difficulty can be removed by making the cutter as small as is consistent with strength. Still more of the trouble can be done away with by making a cutter on a shank, the centre of the work and the centre of shank cutter then being in the same plane. When using a shank cutter the centre of the work is perpendicular to the centre of the cutter, no adjustment for angle being made. Strictly, a shank mill does not reproduce its own shape in cutting a spiral groove. In using a shank cutter, more care is necessary to see that the work does not slip. It may be well to rough out with a disk cutter and finish with a shank cutter. There is generally not much difficulty in involute or single-curve spiral gears with disk cutters.

A cylinder 2 inches in diameter is to have spiral grooves 20 degrees with the centre line of cylinder ; what will be the pitch of spiral? The circumference is 6.2832 inches. The tangent of 20 degrees is .36397. Dividing the circumference by the tangent of angle, we obtain $\frac{6.2832}{.36397}$=17.26 inches + for pitch of spiral.

Before cutting into a blank it is well to make a slight trace of the spiral, with the cutter, after the machine is geared up, to see if the gears are properly arranged. Attention to this may avoid spoiling a blank.

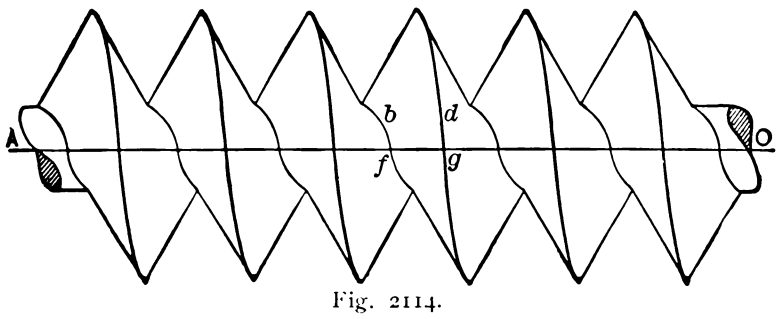

Fig. 2114.

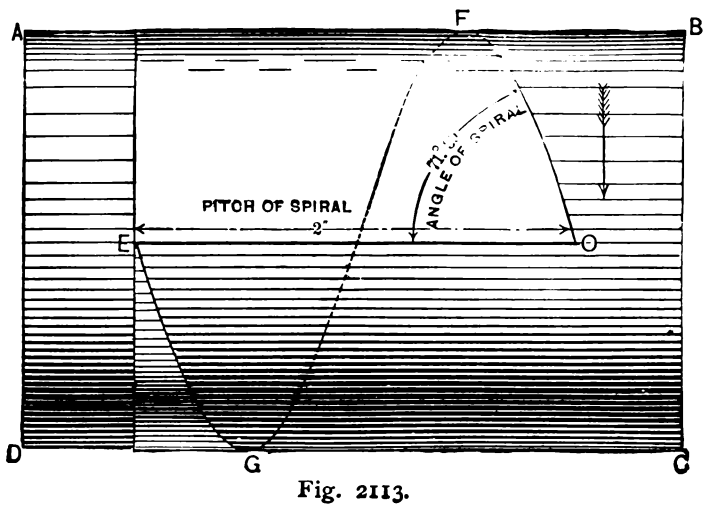

Fig. 2113.

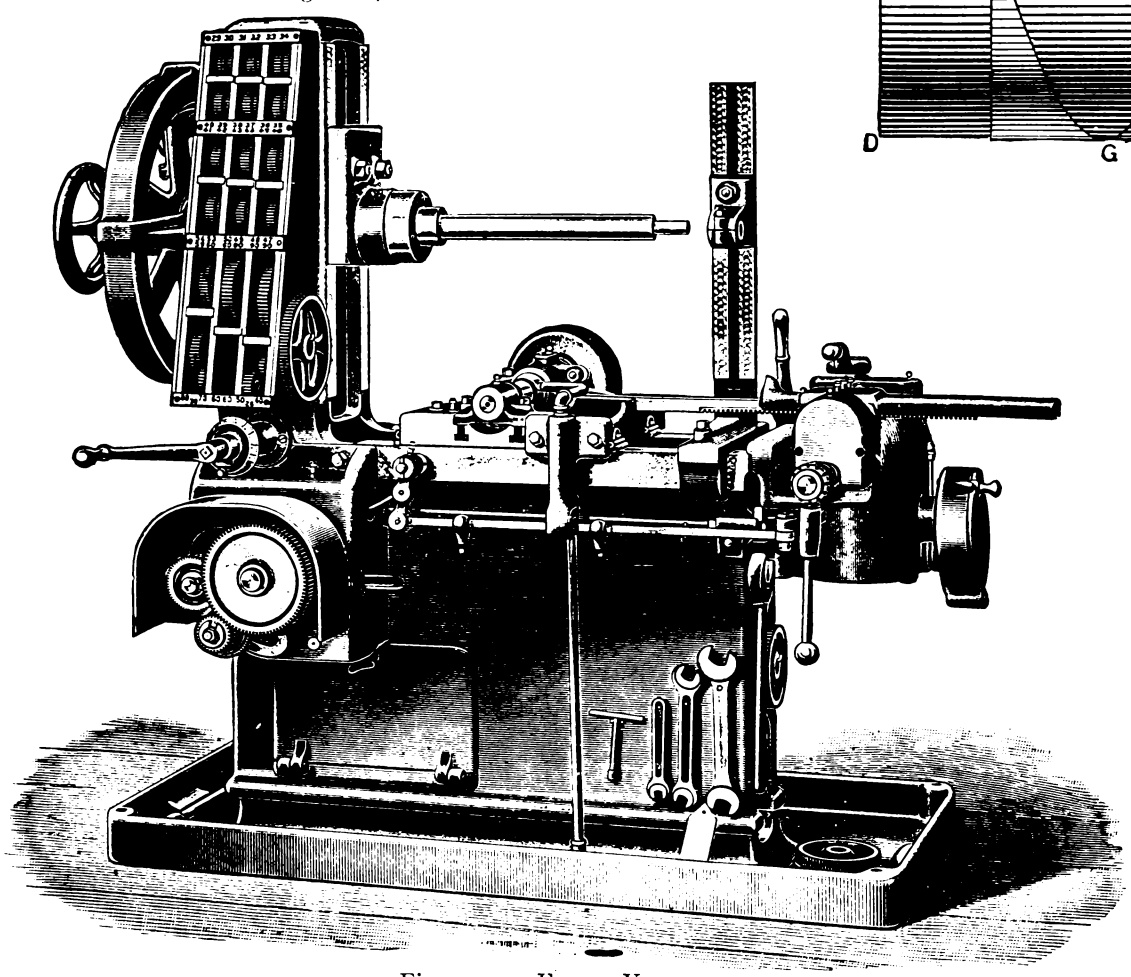

Fig. 2115. Front View.

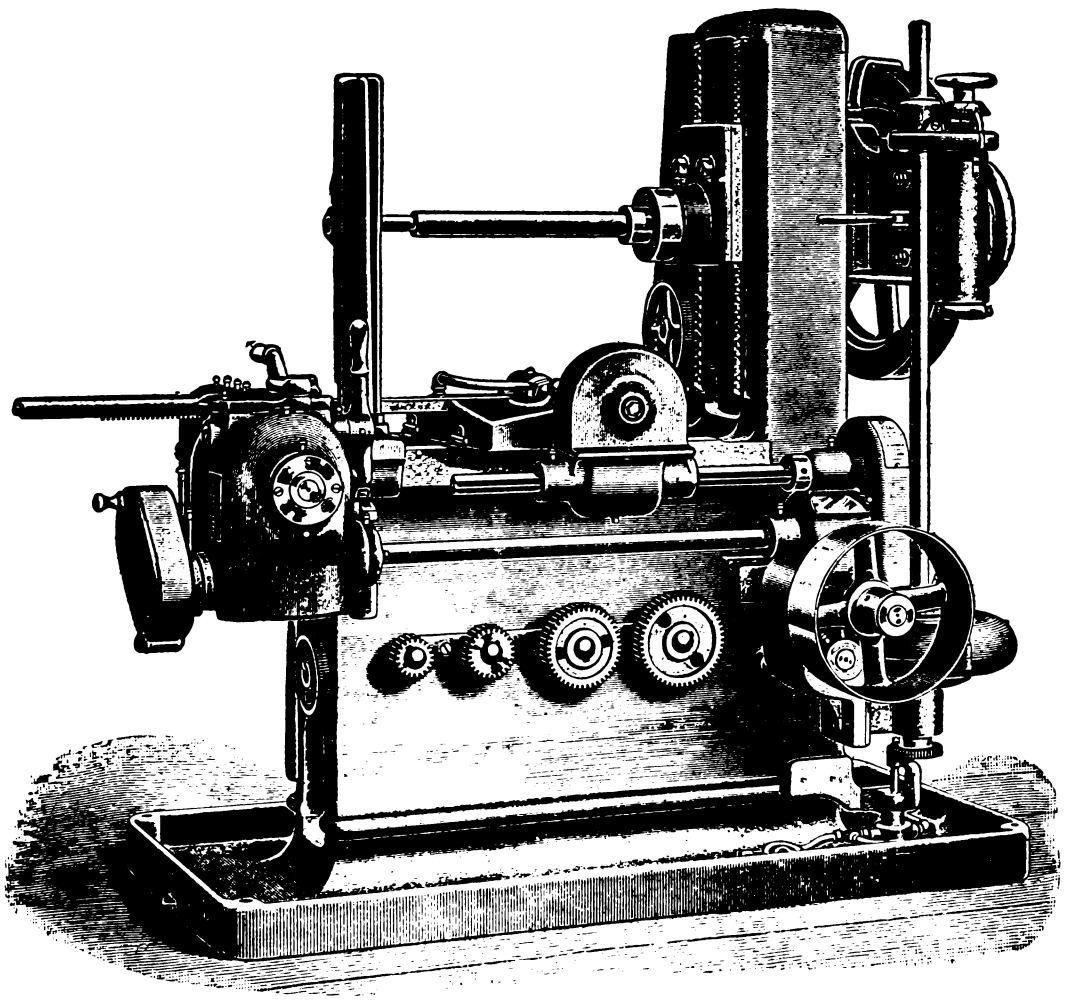

Fig. 2116. Back View.

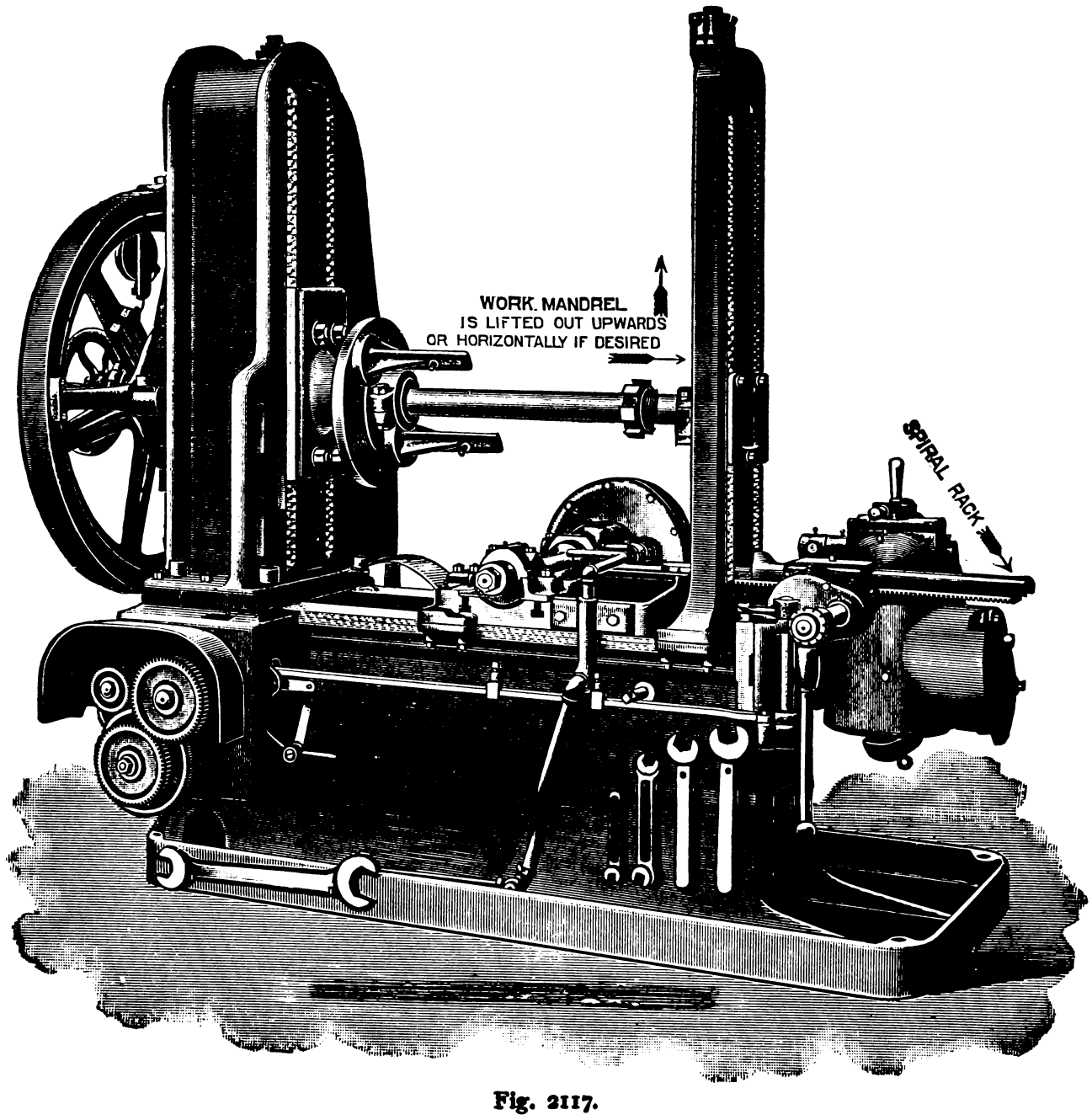
WORK. MANDREL
IS LIFTED OUT UPWARDS
OR HORIZONTALLY IF DESIRED
SPIRAL RACK

Fig. 2117.

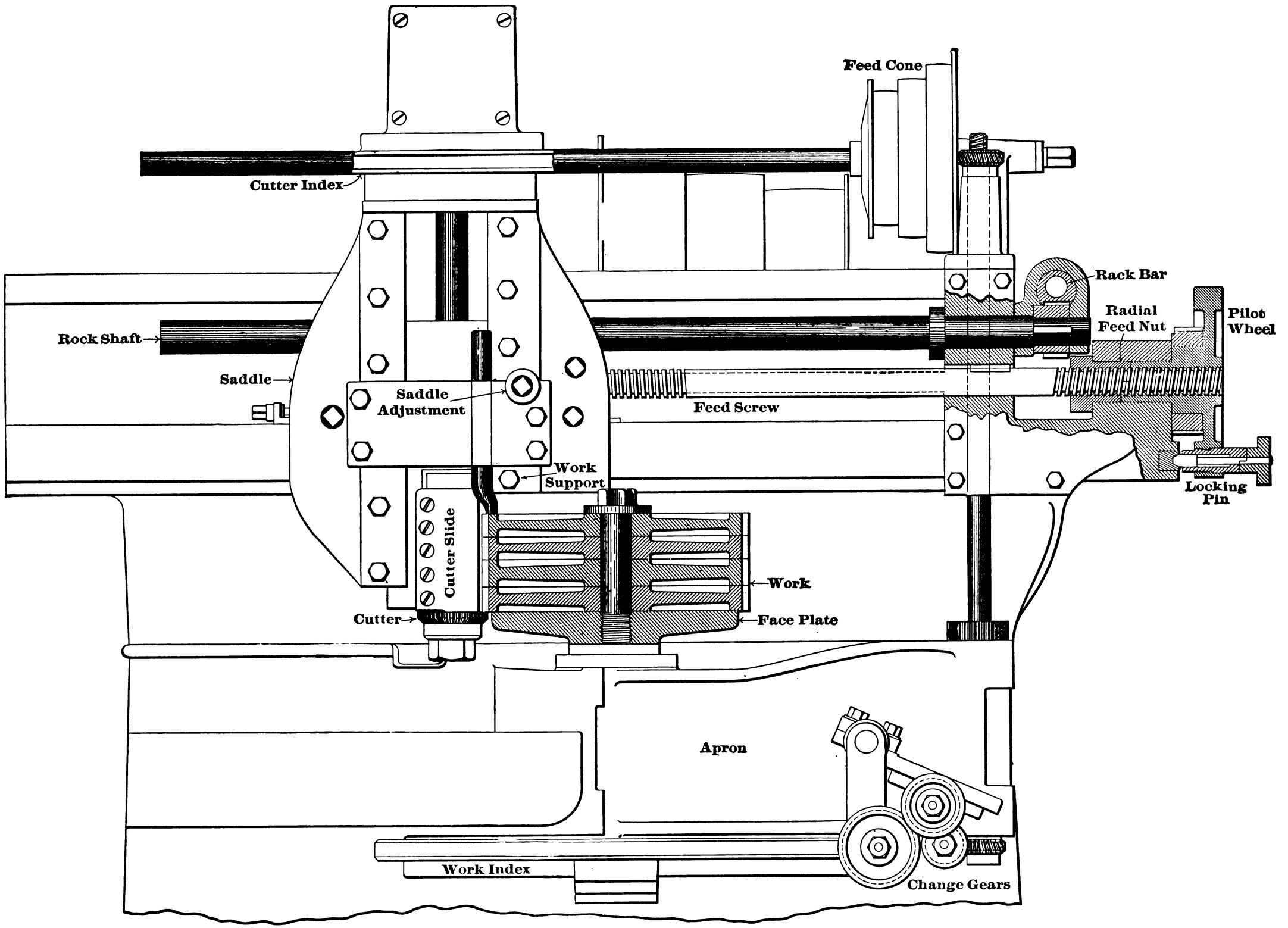
Feed Cone
Cutter Index
Rack Bar
Radial Feed Nut
Pilot Wheel
Rock Shaft
Saddle
Saddle Adjustment
Feed Screw
Work Support
Locking Pin
Cutter Slide
Work
Cutter
Face Plate
Apron
Work Index
Change Gears

Fig. 1.

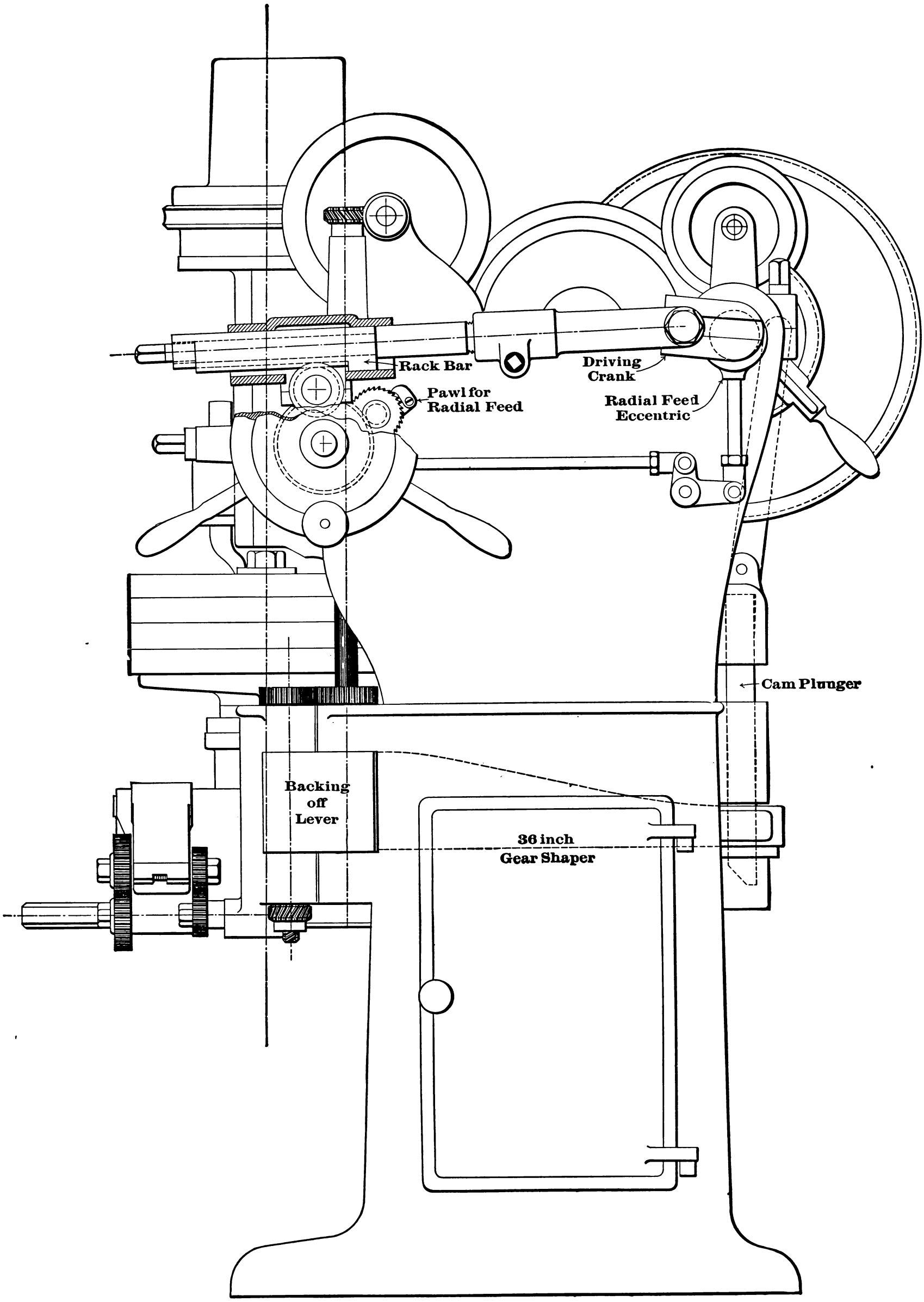
Rack Bar
Pawl for
Radial Feed
Driving
Crank
Radial Feed
Eccentric
Cam Plunger
Backing
off
Lever
36 inch
Gear Shaper

Fig. 2.

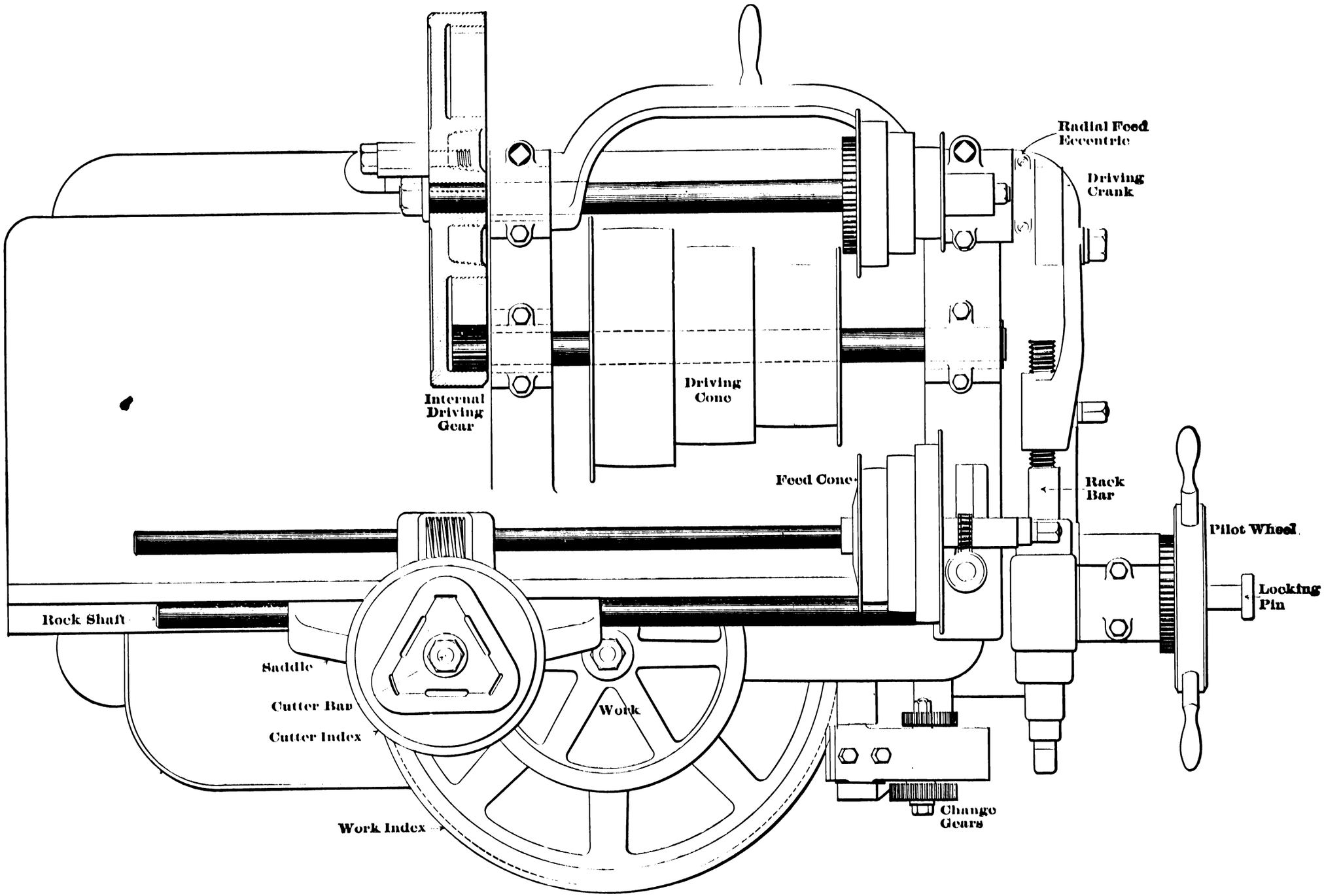
Radial Feed Eccentric
Driving Crank
Internal Driving Gear
Driving Cone
Feed Cone
Rack Bar
Pilot Wheel
Locking Pin
Rock Shaft
Saddle
Cutter Bar
Cutter Index
Work
Work Index
Change Gears

Fig. 3.

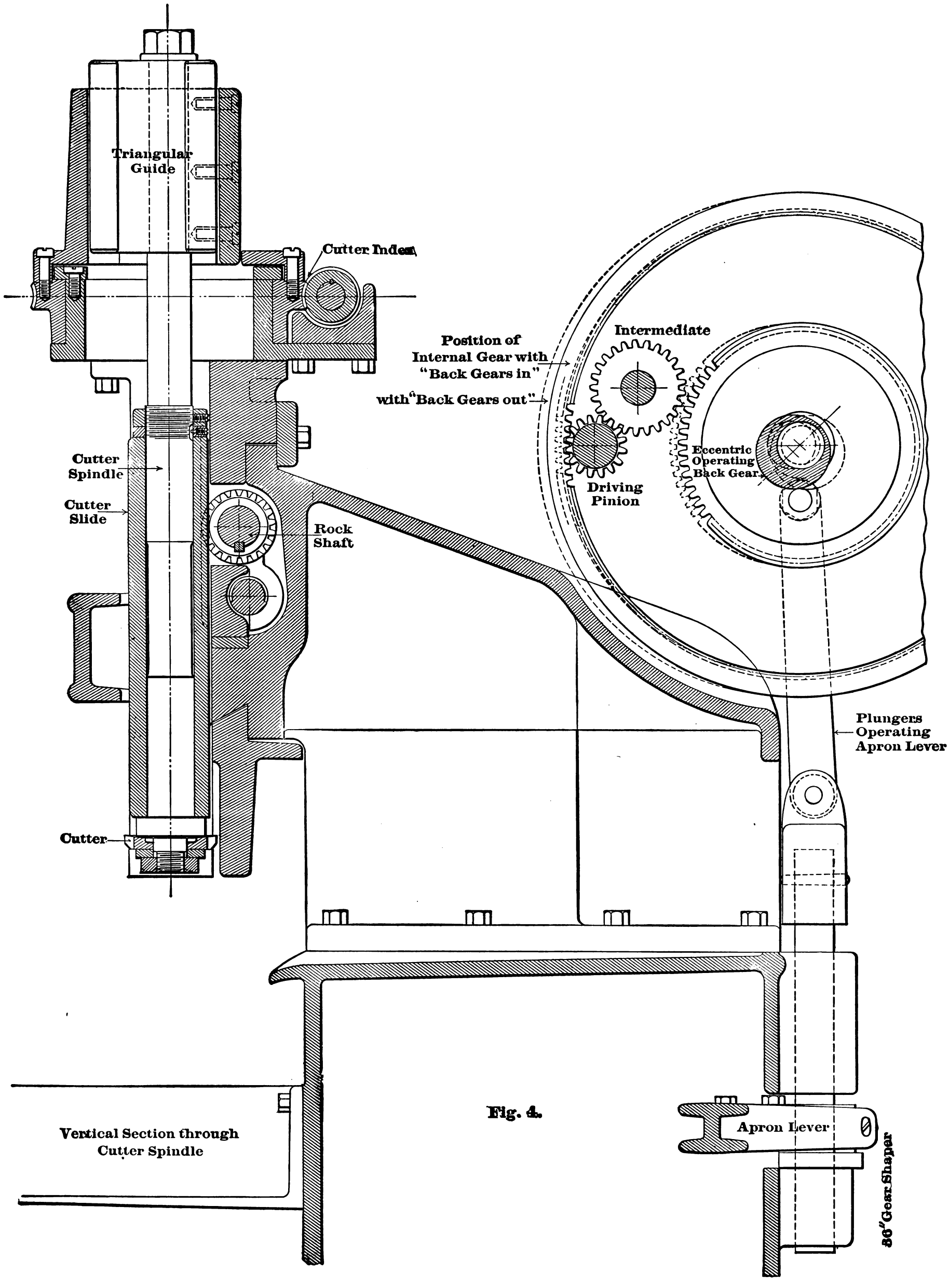
Triangular Guide
Cutter Index
Position of Internal Gear with "Back Gears in"
with "Back Gears out"
Intermediate
Eccentric Operating Back Gear
Driving Pinion
Cutter Spindle
Cutter Slide
Rock Shaft
Plungers Operating Apron Lever
Cutter
Vertical Section through Cutter Spindle
Apron Lever
36" Gear Shaper

Fig. 4.

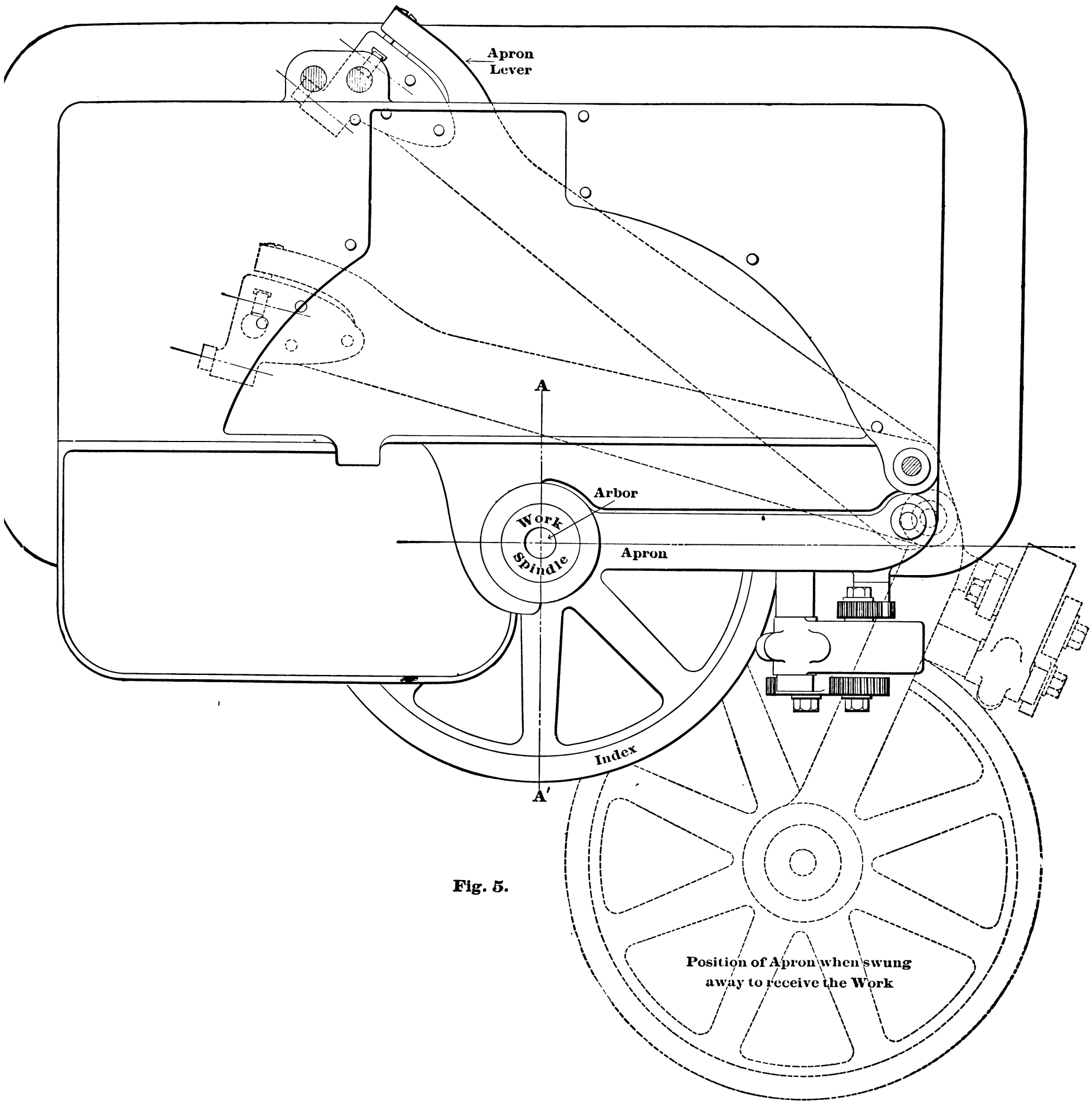
Apron
Lever
A
Arbor
Work
Spindle
Apron
Index
A′
Position of Apron when swung
away to receive the Work

Fig. 5.

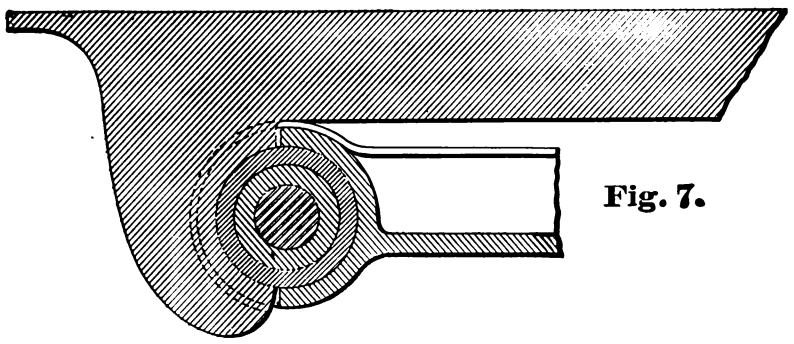

Fig. 7.

HORIZONTAL SECTION OF WORK SPINDLE ON LINE B-B.

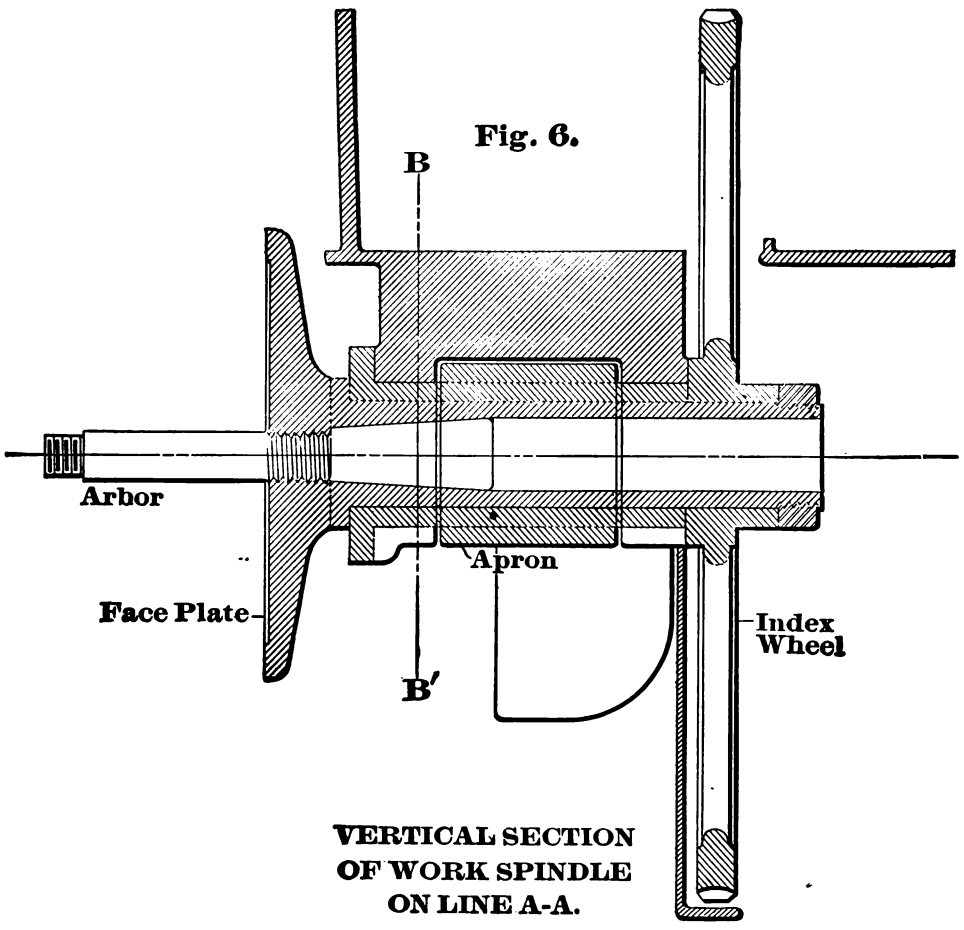

Fig. 6.

VERTICAL SECTION OF WORK SPINDLE ON LINE A-A.

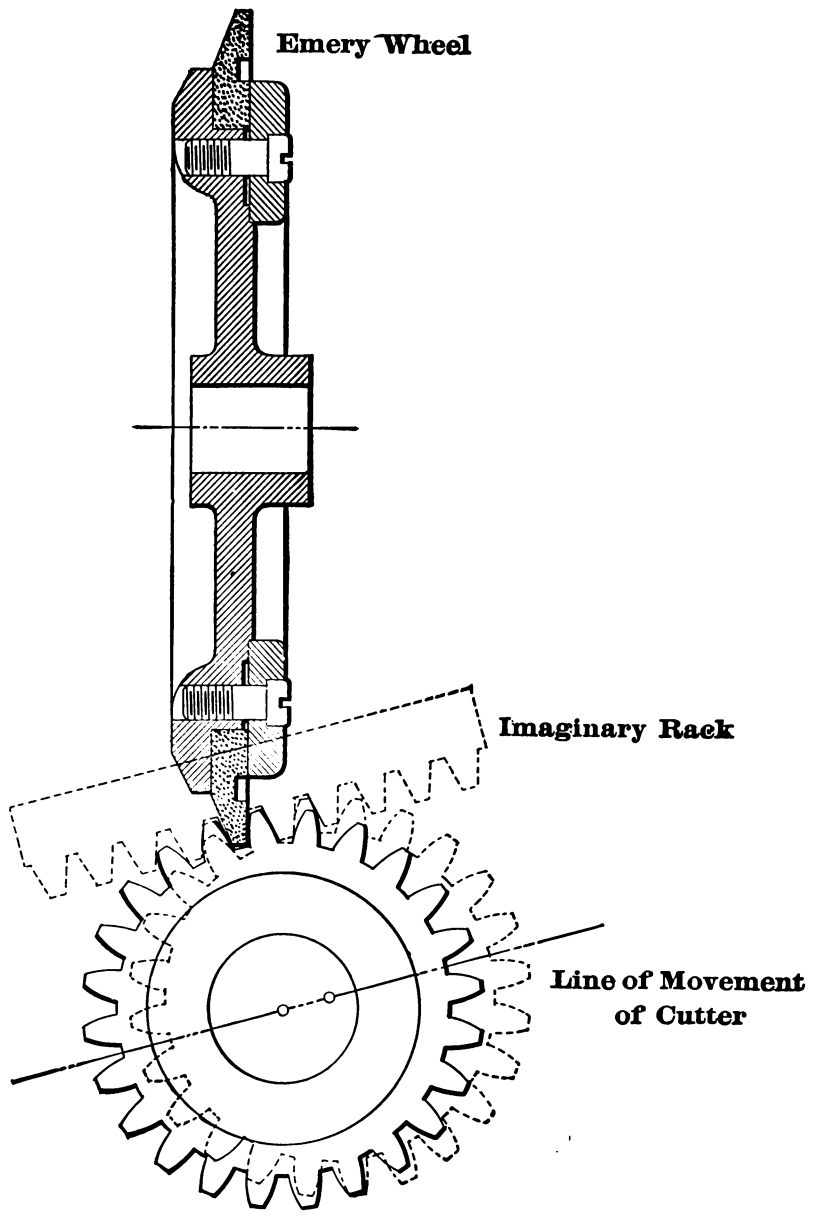

Fig. 10

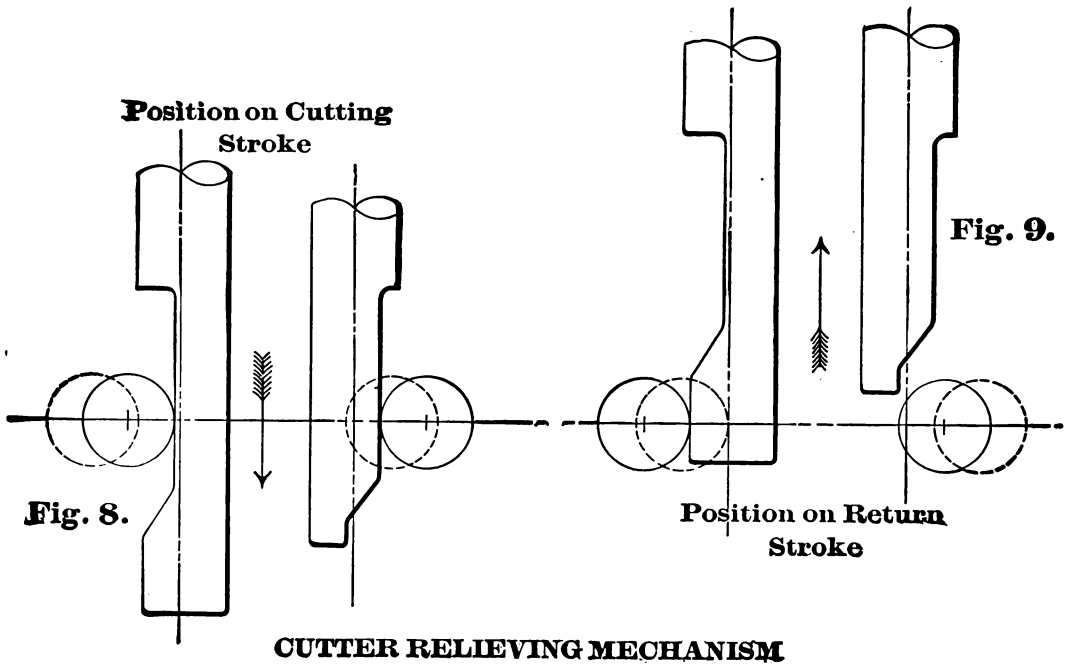

Fig. 8.

Fig. 9.

CUTTER RELIEVING MECHANISM

The cutting of spiral gears develops some curious facts to one who may not have studied warped surfaces.

In the universal milling machine we can cut a class of warped surfaces that will fit a straight edge in two directions. Thus, in Fig. 2114, if it were possible to reduce the diameter of screw and then cut the thread clear down to the centre line A O, the bottom of the thread would be a straight line running through the centre, or the line A O itself. The sides would still be straight as in the figure. If we should cut a spiral groove with a plain rotary disk cutter, having parallel sides, the shape of the grooves would have but little resemblance to that of the cutter. Taking advantage of this principle, we learned the fact that spiral gears can be planed with a rack tool.

The gears, Fig. 2112, were planed. The tool was of the same shape as the spaces in the rack D D, Fig. 2111. All spiral gears of the same pitch could be planed with one tool.

The nature of this can be seen when we consider that straight rack teeth can mesh with spiral gears, as in Fig. 2111.

GOULD & EBERHARDT'S "VICTORIA" ENTIRELY AUTOMATIC GEAR-CUTTING MACHINE.—Figs. 2115 and 2116 represent the latest type of the above-named machine, which is intended for heavy and rapid work. It is driven throughout by a spiral or helical gearing and is so constructed that each function of the machine must be automatically completed before the next one can begin. But one belt is used in driving the whole machine; the pulley or driving shaft is geared direct to the driving mechanism, and all derive their respective and separate movements positively, and thus are not affected by the slip that accompanies mechanism driven by belts.

The worm-wheel is made in two sections, and by the simple movement of a lever the worm can be engaged for working and disengaged for resting. A micrometer adjustment allows for the turning of the worm-wheel by hand to permit any recutting of teeth if desired. The worm and worm-wheel are entirely encased to keep out all dust, etc., but a tight-fitting slide on the encasement can be opened to allow for inspection of the movement when the worm and worm-wheel are brought together. In connecting and disconnecting the worm and worm-wheel, the driving gears to the worm are constantly kept in mesh, thus making but one movement. The machine will divide and cut all numbers of teeth from 4 to 100 and all from 100 to 450 except the prime members and their multiples.

A spiral rack is used for driving the cutter slide, which allows for the return of the cutter at a very rapid rate; the rack terminating directly in back of the cutter in the centre of the slide gives it a direct central thrust. The spiral driving gears to the cutter mandrel are thoroughly deluged in oil by running in oil-tight casings. All gears in the driving mechanism are encased and are lubricated by means of oil tubes which terminate and are fed from without. It is only necessary to change two gears to obtain any feed desirable. An index fastened to the feed box indicates the gears to be used for various speeds.

When desirable, the cutter can be fed through or returned by hand. A novel style of handle is employed to perform this, and whenever it is not being used it disengages automatically from the feed and remains stationary.

A support which rests central on the sliding surface holds long mandrels firm and rigid, and it is not necessary to disturb the adjustment in the changing of work.

All gears, with the exception of the pair connecting with the worm direct, are on fixed centres, and gears used for the various movements are of different pitches, so that they cannot be used for the wrong work. An automatic oil pump, easily detached, conveys lubricant to the cutter.

Fig. 2117 represents what is termed by its makers Eberhardt's patent new-type automatic gear cutter, which is made in sizes to cut gears up to 103 inches in diameter by 20-inch face, and weighs about 16,000 pounds. It will cut up to 6-inch circular pitch.

The general features of this machine correspond to those of this well-known type of gear cutter. It possesses, however, a pan cast around the base of the machine for holding a lubricant, which is automatically pumped to the cutter to keep it and the work cool, thus eliminating the errors that are induced in the cutter and in the work when either of them increase in temperature as the cutting proceeds, which is more especially liable to occur under heavy cuts and rapid feed. Furthermore, keeping the cutter quite cool very greatly preserves the cutter edges. Changes in the rate of feed by change gearing, an index of the range being affixed to the machine. The quick return of the cutter slide is uniform and independent of the rate of feed. The cuttings are removed from beneath the cutter automatically.

THE FELLOWS GEAR-SHAPING MACHINE.—This machine belongs to that class in which the mechanism of the machine generates the shape or form of the work it is to produce positively and automatically. The centre idea in the design of the machine is to use, as a cutting tool, a pinion by means of which all the wheels in a train of gearing from a pinion to a rack can be cut with one cutter, which is in the form of a gear used as a tool, and cutting on the ends of the teeth, while receiving a reciprocating motion.

As soon as the cutter has been fed into the work the proper distance to cut a tooth of correct depth in the work, both the work and the cutter are given a slow rotary motion precisely as if they were two gears rolling together, the cutter in the meantime continuing its reciprocating motion. The cutter thus generates a gear tooth on the blank, which tooth has a perfect rolling contact with the cutter. As all sizes of gears cut with this cutter mesh with it, it is evident that they will mesh together; consequently, one cutter produces an interchangeable set of gears from 12 teeth to a rack.

The principle of the machine for grinding the cutter will be understood from Fig. 10, Plate XXI.-L. If a gear is rolled over a rack, each part of the working face of the gear tooth comes in contact with the corresponding face of its mating rack tooth. As the theoretical involute rack tooth has a straight face, we can substitute for one side of one tooth an emery wheel, inclined to the proper angle. Controlling the movement of this gear, by means of steel tapes, it can be given a rolling motion over the face of the emery wheel, which motion will correspond to that of the imaginary gear with its rack, and as a result, the emery wheel generates an involute curve, which is as near to absolute perfection as is possible to produce mechanically. This process is continued step by step until both sides of all of the teeth are ground. The face of the emery wheel is kept true and in position by a mechanically controlled diamond tool.

Operating the Machine. (Plates XXI.-G to XXI.-L.)—The operations of the machine may be divided into three parts: one giving a reciprocating motion to the cutter; one feeding or rotating the cutter and the blank at their proper relative speeds, and one withdrawing the work from contact with the cutter on the return stroke.

The ram carrying the cutter operates vertically, similar to a slotting machine. Figs. 1, 2, and 3 show the cutter driving mechanism. Power is taken from the driving cone, and transmitted through the internal or annular gear to the crank, giving a reciprocating motion to the rack bar. This motion is carried to the cutter by means of the rack shaft, which drives a helical pinion, engaging a rack on the cutter slide, Fig. 4. The length of the stroke is adjusted at the driving crank, which is graduated. The saddle in which the ram slides is adjustable on the bed for different diameters of work. This is accomplished by means of a crank wrench operating the nut which engages the long screw seen at the front of the machine in Fig. 1.

The cutting may take place either during the upward or downward stroke, but the upward or drawing stroke is preferable for most work. For the drawing cut a support, held in the saddle, is placed at the top of the work, directly over the cut. This takes all the thrust, and confines the cutting strains to the saddle.

The feed of the machine consists of two parts: The first, or radial feed, draws the cutter into the blank the proper depth; the second, or rotary feed, gives the cutter and the blank their proper relative rotary speeds, which is the same as two gears meshing together. The screw by which the saddle is held in position has a lengthwise motion, which motion is controlled by the nut, Fig. 1. This nut is an extension of the pilot wheel. The rim of the pilot wheel is graduated, the proper position of each pitch being indicated. In setting up the machine for the operation of cutting, the

pilot wheel is turned until the pointer indicates the required pitch, which operation moves the cutter away from the work an amount equal to the depth of the tooth to be cut. The saddle is now brought up to the work by means of the crank wrench until the cutter comes in contact with a flat gauge held between it and the work. Allowance for the thickness of this gauge is made in graduating the dial. The dial or pilot wheel is now given an intermittent motion by means of a pawl and ratchet, operated by the eccentric at the back of the driving crank, Fig. 2. This draws the cutter into the work until the proper depth is reached, when a locking pin is released, which automatically engages the rotary feed. This feed continues until the lower index and the work have made a trifle over a complete revolution, at which point the feed is tripped, ringing a bell.

In order to accurately control the cutter and the work, each is provided with an index wheel, the worms of which are connected by the horizontal and the vertical shafts shown in Fig. 1. Power is transmitted from the small cone above the driving shaft to the cone on the horizontal feed rod, producing the rotary feed.

It now remains to describe the mechanism for relieving the cutter from contact with the work on the return stroke. This is shown by Figs. 5 to 9. Fig. 5 is a plan of the cabinet, or base of the machine, the upper part with the cutter operating mechanism being removed. Figs. 6 to 9 show the method of controlling the work spindle during the operation of cutting, at the same time allowing it to be withdrawn from contact with the cutter during the return stroke. The quill, in which the work spindle rotates, is forced into the apron, or swinging arm. A portion of the casting around the top and bottom of the quill is cut away, allowing the quill to bear in a corresponding seat in a lug on the main casting or cabinet. The apron is pivoted to the short end of a lever, Fig. 5, the long end of which receives an intermittent motion, timed to take place at each end of the stroke of the cutter. Figs. 8 and 9 show the relative position of the plungers and roller operating this lever, Fig. 8 being their position in the middle of the upward or cutting stroke, and Fig. 9 of the downward or return stroke. The quill, carrying the work spindle, is thus rigidly held in contact with its seat in the cabinet, while the cutter is operating, and withdrawn on its return.

The method of holding the work is another distinctive feature of this machine. A number of blanks may be chucked together, as shown in Plate XXI.-G, in which four blanks are shown. The arbor has an inverted taper, and is drawn into its seat by a face plate threaded to it, Fig. 6. The work is now clamped to the face plate, the whole making the most rigid combination possible. The face plate is not a necessity, but where the quantity of work will warrant the expenditure it is advisable. When not used, its place is taken by a loose washer.

The back gear, shown in Fig. 4, consists of two gears, an outer and internal gear, between which are the driving pinion and an intermediate gear. When the driving pinion is in mesh with the internal gear a slow feed results. A partial turn of the eccentric quill, carrying the bearing of the driving spindle, brings the intermediate gear to mesh with the smaller external gear, doubling the speed. These gears are all cut on this machine with the regular cutter.

The claims for the machine may be summed up under three heads as follows :

Accuracy.

1. It cuts a theoretically correct tooth.
2. An error in spacing is an impossibility.
3. Cannot produce an incorrect tooth by setting the cutter "off the centre."
4. A variation in the diameter of the blank does not produce noisily running gears.
5. Gear teeth bear to the extreme point.

Simplicity.

1. Only one cutter of each pitch is necessary. Five cutters cover the ordinary range of work.
2. No depth gauge is required ; the machine attends to that automatically.
3. The quality of the work does not depend upon the operator. The "personal equation" is entirely eliminated. Given a certain cutting speed and feed, the quality of the work is always the same.

Output.

1. It will cut more gears than any other machine.
2. It will cut internal gears.
3. It will plane close to a shoulder or into a recess.
4. The work is held by the "face plate" system, by which the work spindle, the arbor, and the work are drawn together as rigidly as if they were one piece.
5. The cutter travels the exact face of the blank, whereas the rotary cutter must travel from 10 to 40 per cent. more.

In the Figs. from 2118 to 2133 is illustrated the Colburn keyway-cutting machine constructed by Baker Brothers, of Toledo, Ohio.

The main features of the machine are that the cutter bar is operated vertically from below in a rigid and accurately guided slide operated by rack and pinion motion, a reciprocating motion being obtained by a friction clutch between two driving pulleys (one for the upward and the other for the downward motion), the friction clutch being operated by a tappet motion.

The cutter bar is given rigidity and accurately guided at its upper end by a guide spindle screwed on to its upper end and passing through a horizontal guide arm carried by a vertical post secured to, but adjustable upon, the work table.

The work table or platen is capable of being set at an angle so as to cut keyways taper in their depth, and is provided with a graduated segment of circle and an index pointer for that purpose.

The cutters or cutting tools are made to the correct width of the keyways and are ground to resharpen them on the end face only, so that the grinding does not alter their shape or size.

Figs. 2118 and 2119 are illustrations of two different sized machines known as Nos. 1 and 3, the principles of construction being the same and consisting of a framework carrying a cutter bar operating vertically and cutting on the downward stroke. The upper end of the bar screws upon the lower one just above the tool and is guided by an arm supported by a rigid post. This arm is adjustable for height upon the post to suit different depths of work and is readily clamped in its adjusted position. The post may be for large work set back upon a seat and so adjusted in position as not to be in the way when it happens that the required key seat is to be dead in line with the arm of a pulley or wheel, as illustrated in Fig. 2120.

Fig. 2121 is a view of the lower guide bar, showing the manner of clamping, adjusting, and centring cutter bar in same. This guide bar is of such construction that the wear on the sides is taken up without altering the truth of its position in the frame. The back is cast with an open space leading down and opening in front. Any loose chips falling backward will fall into this opening and come out in front, clear of all running parts of the machine. This is a very important feature, and effectually prevents all chips from lodging in the rack or against the sides of the bearings.

Fig. 2122 is a rear view of the cutter bar, showing a lateral slot cut into its side. A feather in the back of the bearing, Fig. 2124, fits this slot, thus always bringing the cutter into a central position.

Fig. 2123 is a sectional view of the bushings in the upper arm through which the upper guide bar travels. It is chambered out in the centre for oil, which is fed into it through the upright groove.

Fig. 2124 is a view of the bushing used for a smaller size bar. This fits the lower guide the same as the large cutter bar, and has a feather inside its bore, which centres the bar. Being split on one side, it can be clamped tightly against it.

Fig. 2125 is an enlarged view of the upper end of cutter bar and lower part of upper guide bar, showing clearly the manner of fastening them together. The upper end of cutter bar is made to fit snugly into the socket of the guide bar, and they are securely held together by the threaded portion as shown. When these parts are together, the whole bar is quite rigid.

Fig. 2126 is a view showing the bars vertically separated.

The cutting tool, Fig. 2127, is made to fit closely into the slot in the bar, and is held in position by the hardened steel set screws. The cutters are all accurately milled to size, both on their shanks and cutting faces. The shanks are all made to standard gauges.

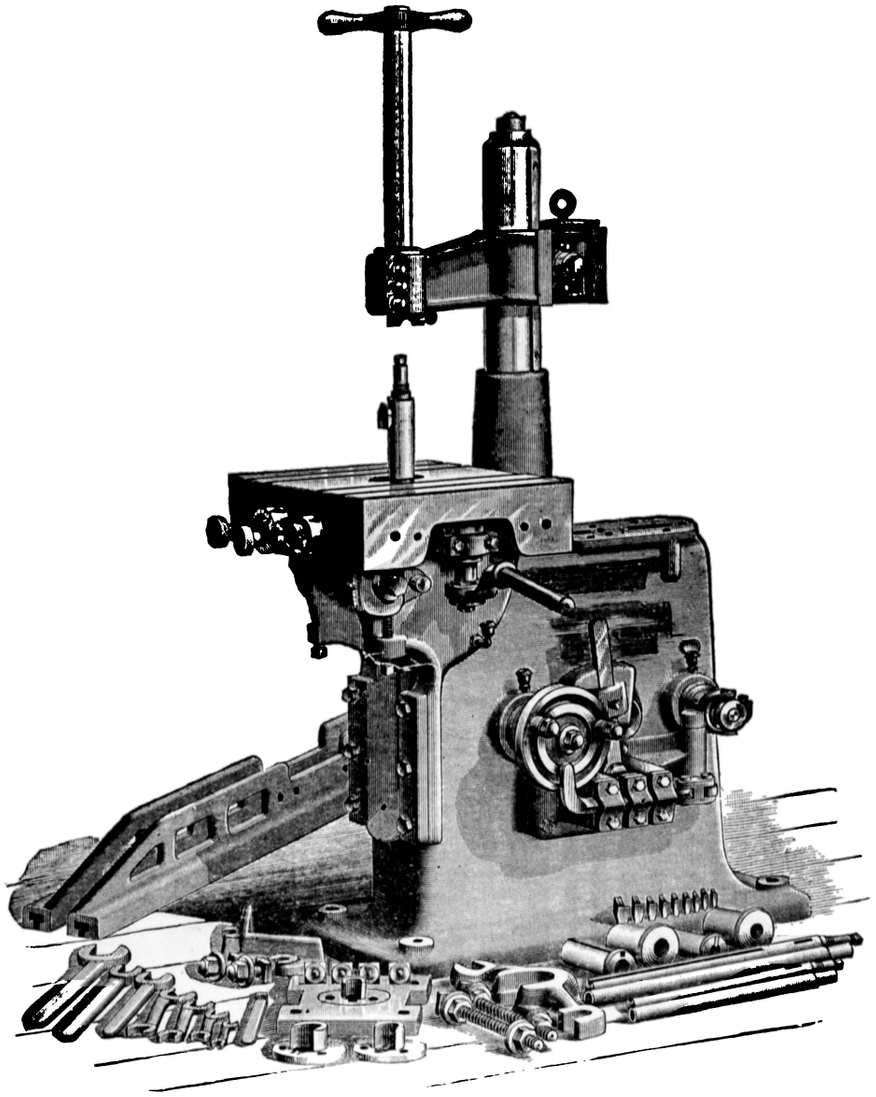

Fig. 2118

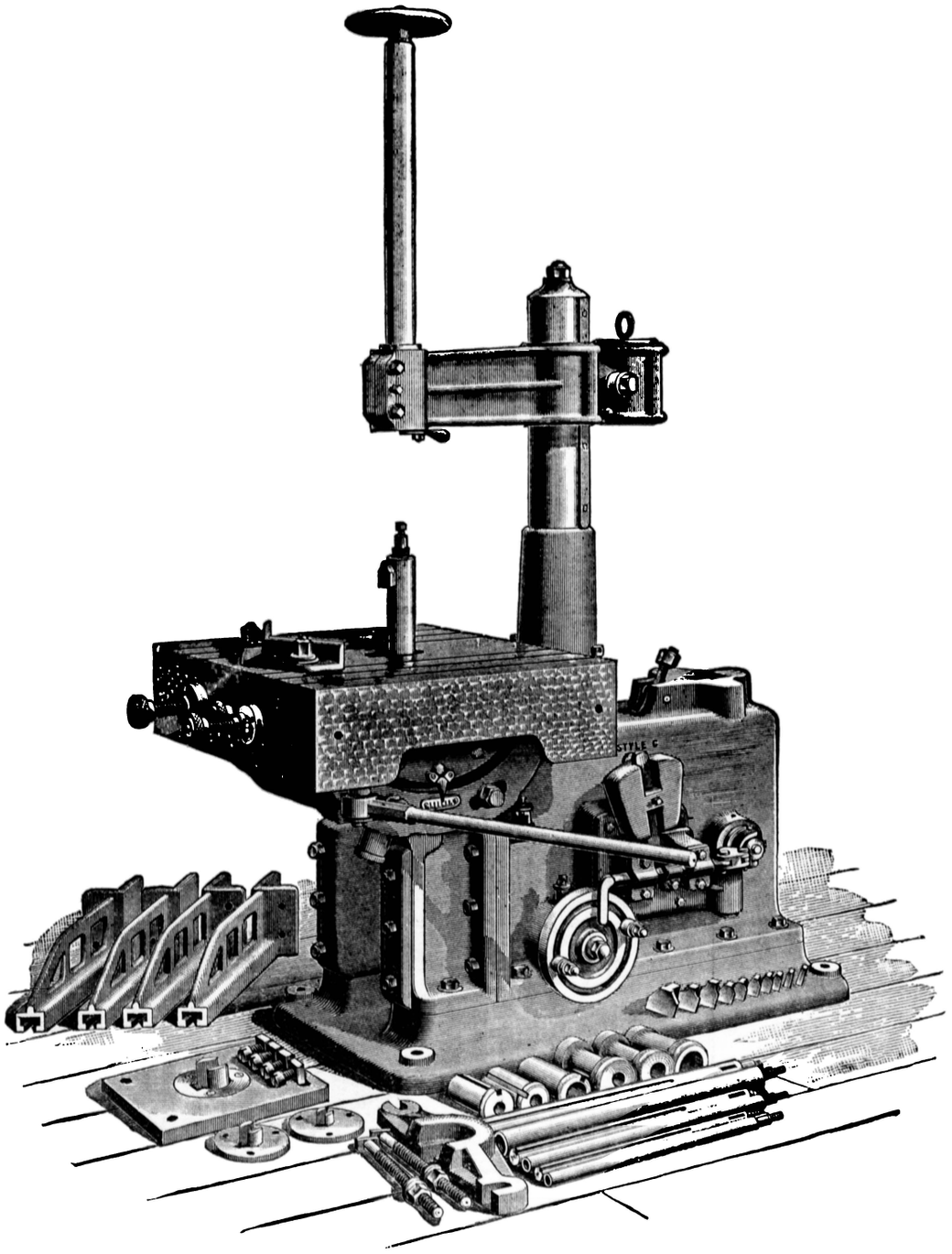

Fig. 2119.

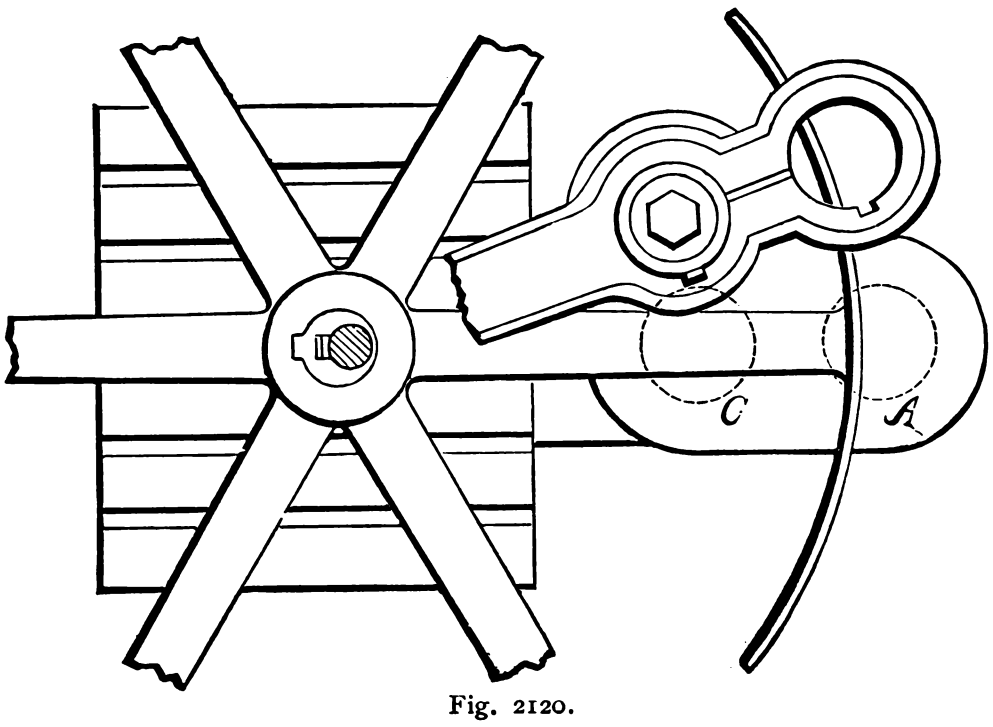

Fig. 2120.

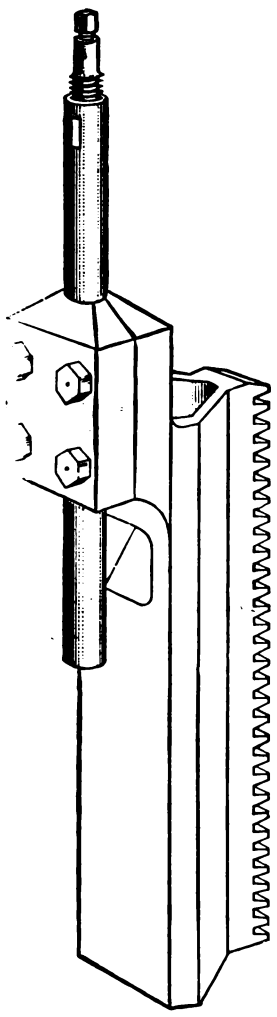

Fig. 2121.

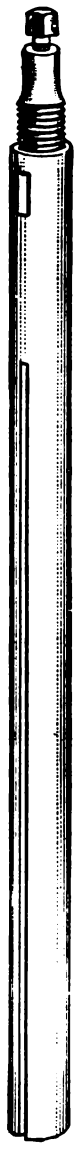

Fig. 2122.

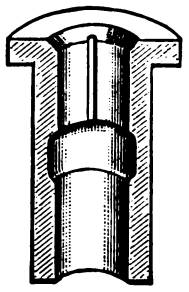

Fig. 2123.

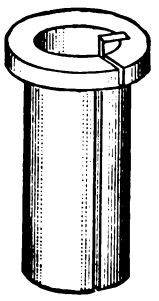

Fig. 2124.

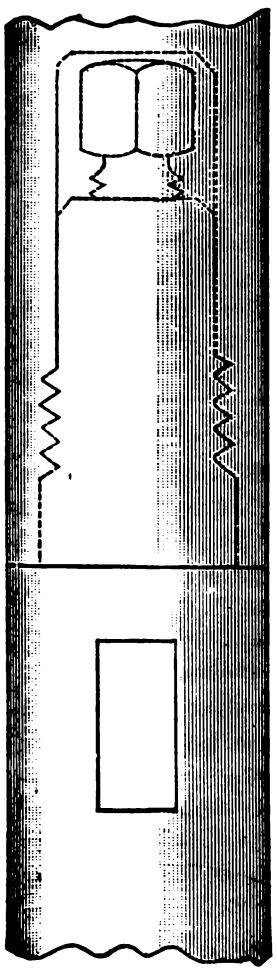

Fig. 2125.

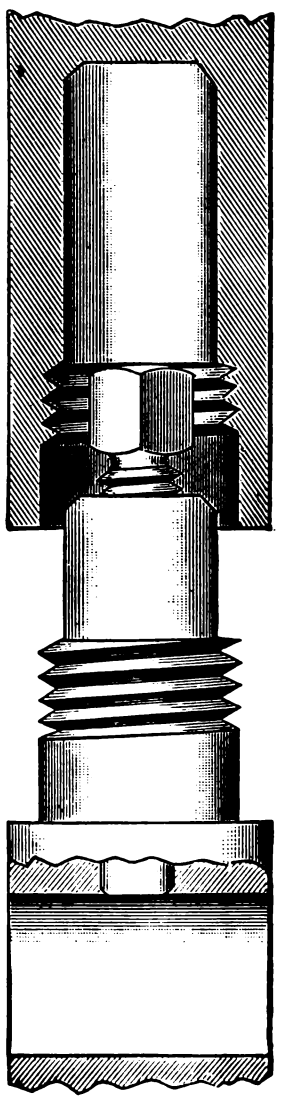

Fig. 2126.

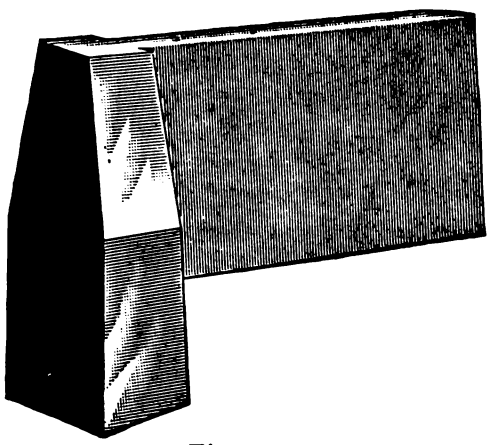

Fig. 2127.

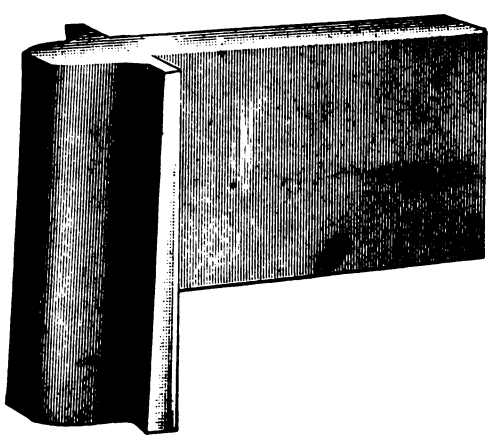

Fig. 2128.

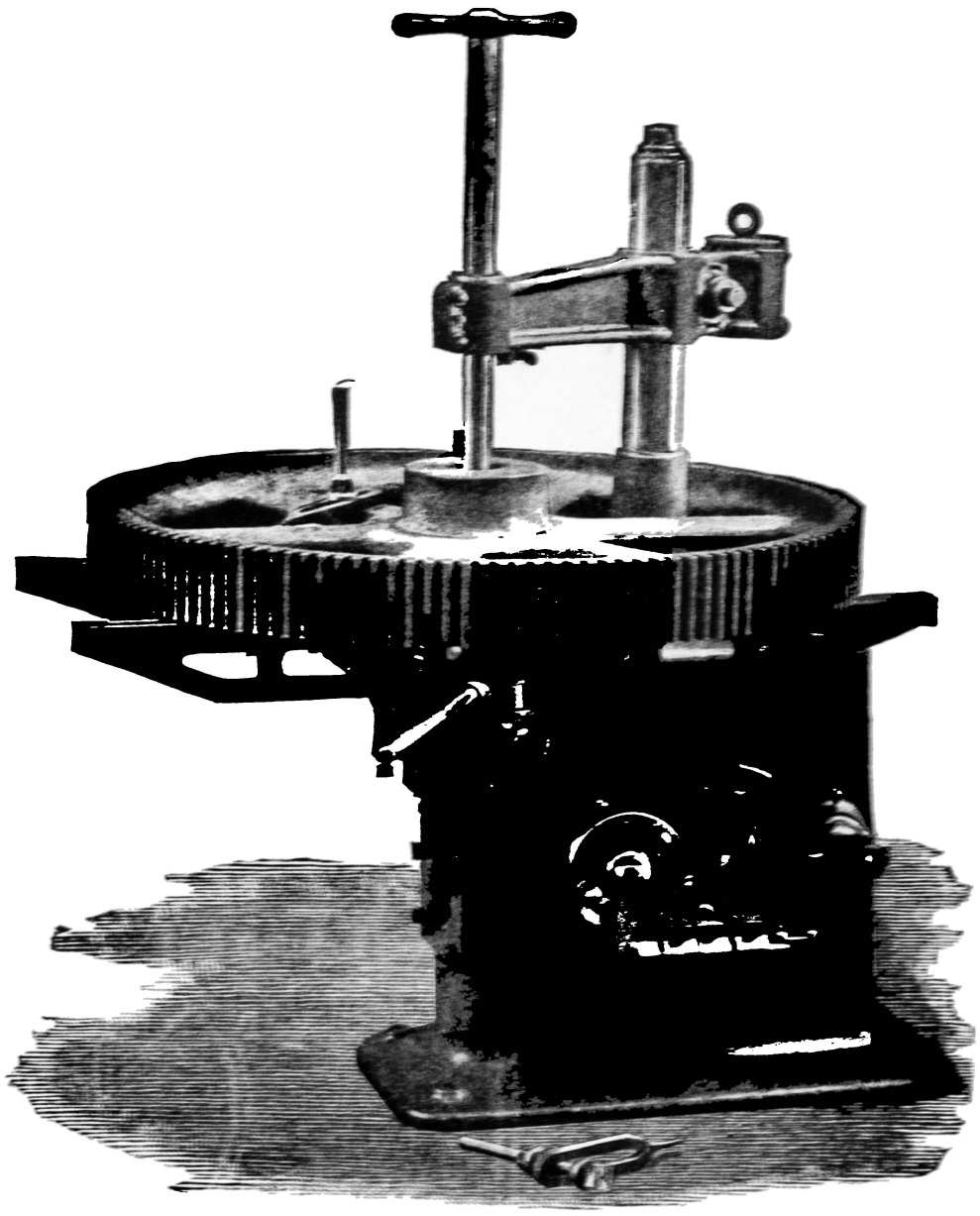

Fig. 2130.

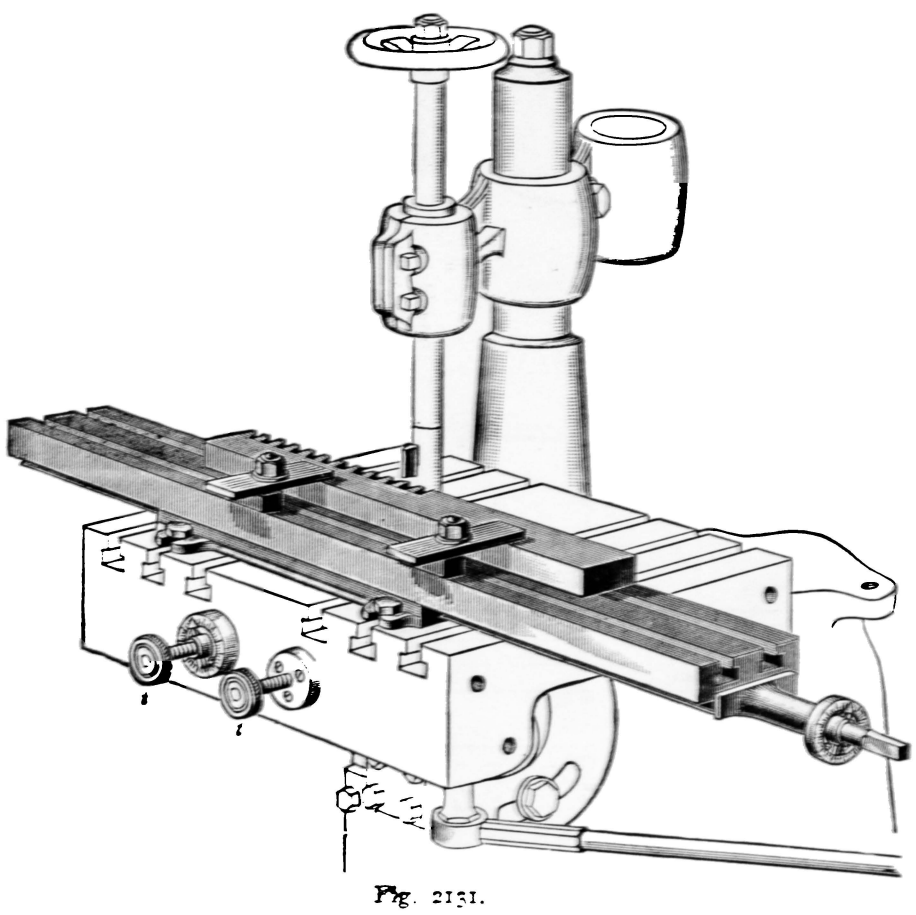

Fig. 2131.

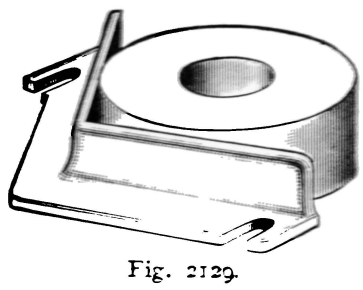

Fig. 2129.

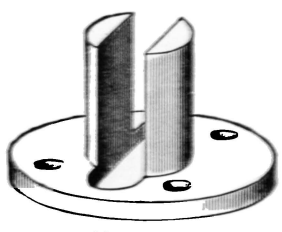

Fig. 2132.

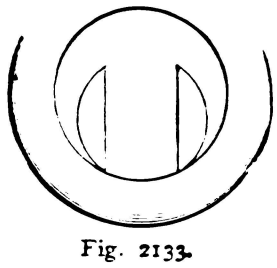

Fig. 2133.

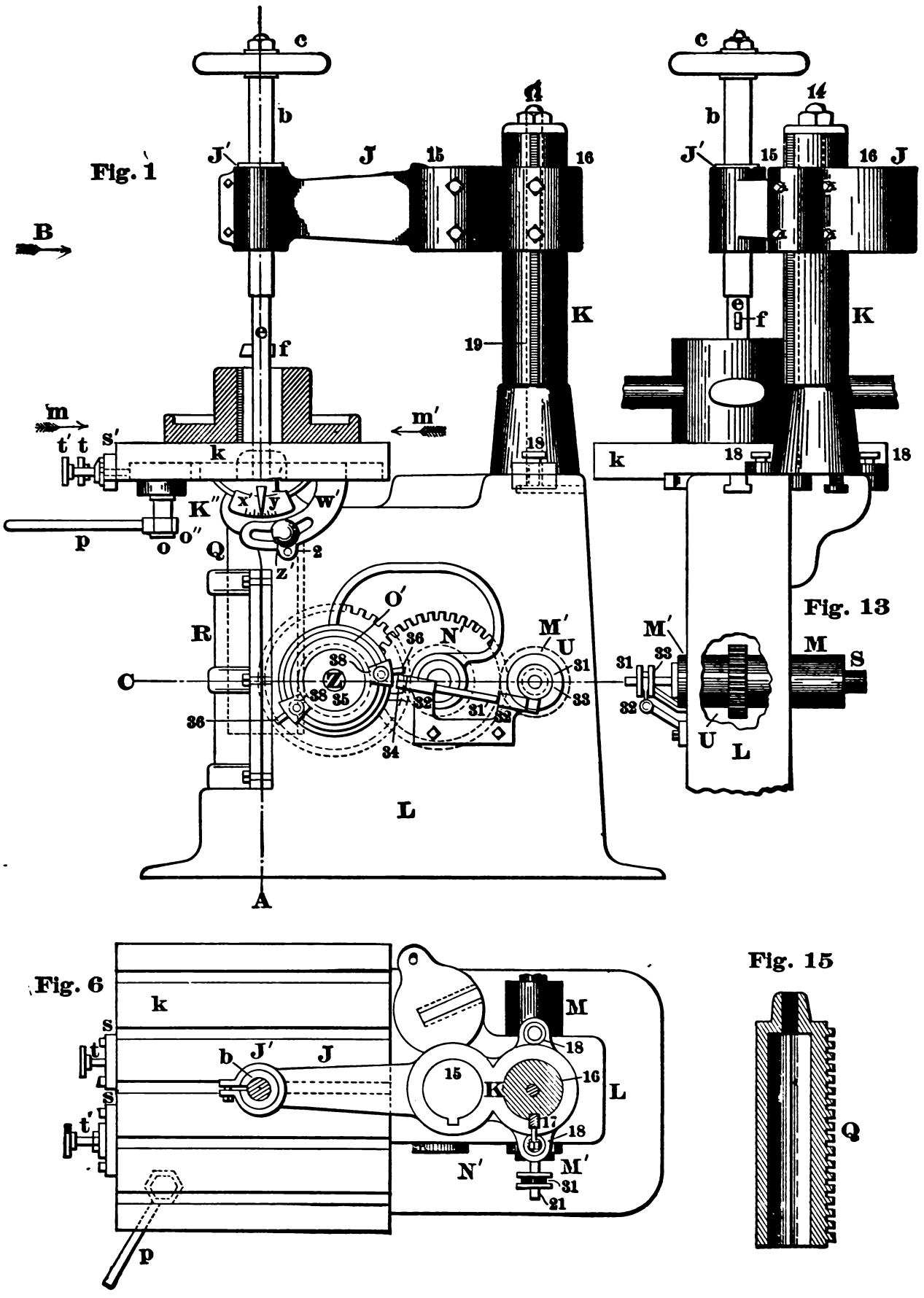
Fig. 1
Fig. 13
Fig. 6
Fig. 15
Fig. 11
B
A
C
D
L
K
J
J'
M
M'
N'
O'
Q
R
S
U
k
p
m
m'
s'
t
t'
o
o''
K''
x
y
w'
z
z'
c
b
e
f
14
15
16
18
19
2
31
32
33
34
35
36
38

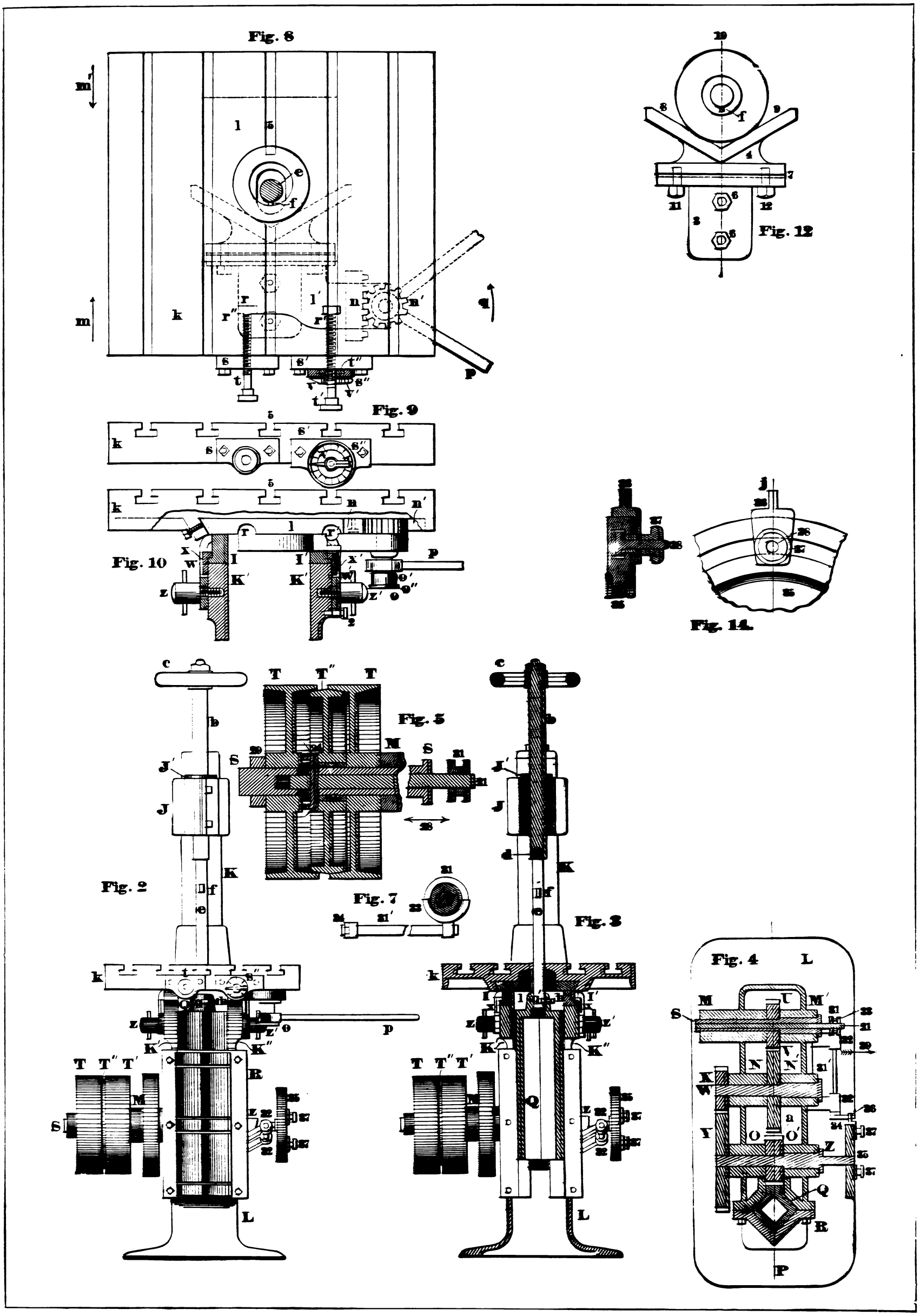
Fig. 8
Fig. 9
Fig. 10
Fig. 12
Fig. 14.
Fig. 5
Fig. 7
Fig. 2
Fig. 3
Fig. 4

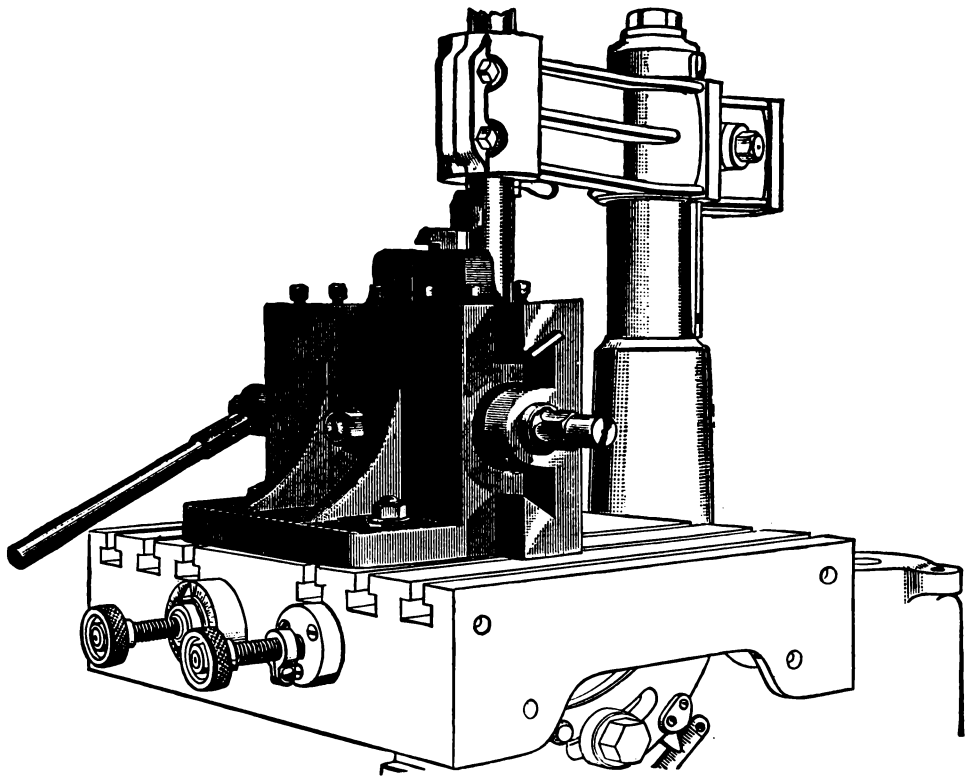

Fig. 2134.

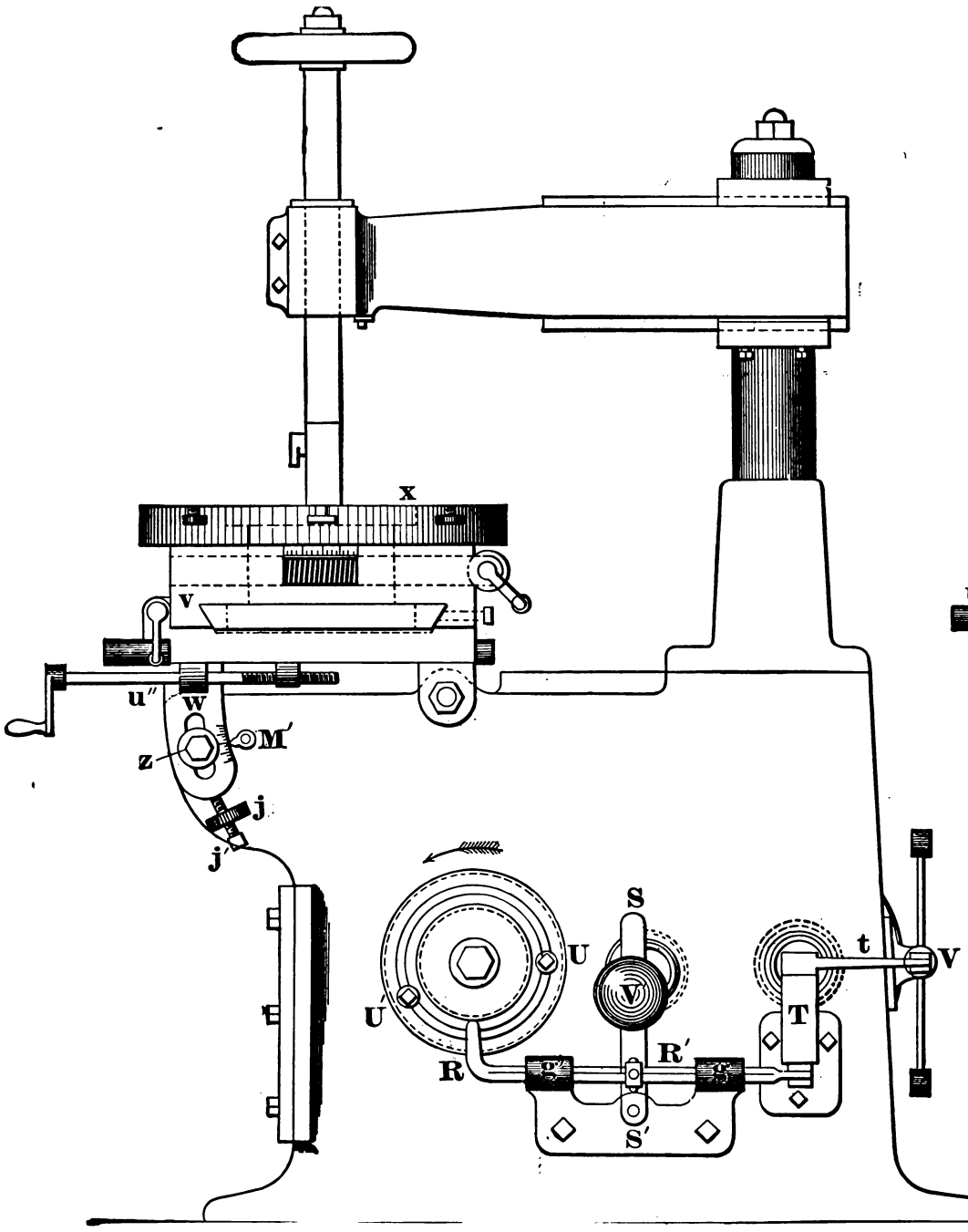

Fig. 2135.

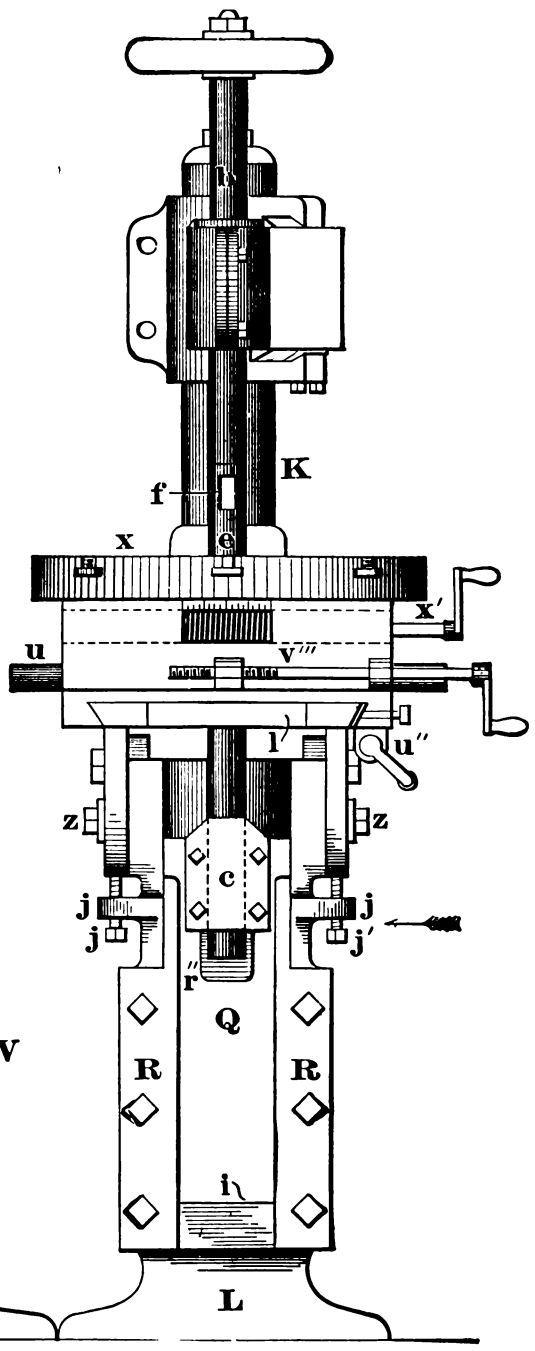

Fig. 2136.

Fig. 2128 is a view of a cutter for rack-cutting attachment. The cutters are made to cut racks of any length or pitch, and up to 6 inches wide. They are accurately made and will keep their correct shape until ground clear down.

Fig. 2129 shows the chuck for centring work that is turned on the outside and faced up. The chuck is adjusted for position on the work table and bolted there, and when once set, any number of pieces can be key seated with the assurance that all will be equally true, while the micrometer will assure that all the keyways are exactly alike for depth.

Fig. 2130 shows the machine with a gear wheel in place to be key seated, and Fig. 2131 with a rack in position for cutting its teeth.

Figs. 2132 and 2133 show different views of the centring attachment; by means of which pieces of work are instantly and accurately centred by the bore, and located on the table always at the same distance from end of the micrometer screw. The centring flange being stationary, this distance must always be the same; consequently, the micrometer being set for the proper depth of keyway, all will be cut alike. The micrometer is graduated to thousandths of an inch, giving it a very fine adjustment. Turning the screw, *t*, regulates the depth of the cut at each stroke of cutter, until the micrometer screw *t'* comes in contact with a stop under table, when it can be fed in no farther, and the keyway is at its proper depth. Where the piece to be key seated is bored only and left rough on the outside, the bushing is made longer and fits the bore closely, thus chucking the same accurately without facing the hub. In this manner considerable time is saved, and the keyway cut perfectly true. This device adapts the machine for a great variety of work, especially among the manufacturers of pulleys, agricultural and mill machinery, windmills, etc. For work that is faced on the hub, one flange will centre a great variety of sizes in the manner shown by Fig. 2133.

A more complete description of the machine is given in the patent as follows:

Referring to Plates XXI.–P and XXI.–Q, Fig. 1 is a side elevation of the entire machine. Fig. 2 is a front elevation of the machine. Fig. 3 is a vertical section of the machine on line A, Fig. 1, viewed in the direction of the arrow B. Fig. 4 is a cross section on line C, Fig. 1, showing the manner of gearing this machine. Fig. 5 is an enlarged section of the driving and friction pulleys, and a portion of the mechanism for operating the same. Fig. 6 is a plan. Fig. 7 (in two parts) represents side views of portions of the reversing mechanism. Fig. 8 is an enlarged view of the top of the table, showing the feed mechanism. Fig. 9 is an enlarged view of the front of the table. Fig. 10 is an enlarged view of the front of the table, showing the mechanism underneath in section on line D, Fig. 11. Fig. 11 is an enlarged side view of the table, showing the mechanism for tilting the same. Fig. 12 is an enlarged top view of the centring or radially locating device. Fig. 13 is a rear elevation of a portion of the machine, showing the arm moved to the position illustrated in Fig. 2120. Fig. 14 is an enlarged view of the dog and part of the disk shown in Fig. 1. Fig. 15 is a section of the lower guide bar on line P, Fig. 4. Similar letters and figures refer to similar parts throughout the several views.

The arm J, column K, and standard L, constitute the framework of the machine. The lower guide bar Q has a vertical movement in a bearing, preferably V-shaped, in the front of the standard L, as shown in Fig. 4. The bearing being V-shaped, the wear is readily taken up by tightening the screws on the cap R. The lower guide bar is actuated by a train of gearing, as shown in Fig. 4.

The shaft S, journaled in the bearings M and M', carries on its outer left-hand end a set of friction pulleys T T' T''. By means of an open and a crossed belt, and mechanism hereinafter described, a rotary motion is given to the shaft S in either direction. On the shaft S is keyed a pinion U, the teeth of which engage with the large gear V, keyed to the shaft W, journaled in the bearings N and N'. To the outer left-hand end of the shaft W is keyed another pinion X, which engages with the large gear Y, keyed to the shaft Z, journaled in the bearings O and O'. To this shaft Z is keyed another pinion *a*, the teeth of which engage with the teeth in the rack of the lower guide bar Q. Thus, it is obvious that a large amount of power may be readily transmitted to the aforesaid guide bar Q. On the front end of the arm J is an adjustable bearing, into which the upper guide bar *b* is fitted. At the upper extremity of the said upper guide bar *b* is a hand wheel *c*. At its lower extremity this bar is bored and threaded as shown at *d*, Fig. 3. A bar *e*, carrying a suitable cutter *f*, having at its upper extremity a thread, is adapted to fit into the opening *d*. The lower end of the bar is fitted to the upper end of the lower guide bar Q, thus bringing shaft *b*, cutter bar *e*, and lower guide bar Q into line with each other.

The two upper outwardly projecting sides K' and K'', Figs. 1, 2, and 3, of the standard L are accurately bored as a bearing for the rockers I and I'. These rockers are segments of a circle whose vertical centre lies in the plane of the top of the table *k* and in line with the vertical centre of the cutter bar *e*. These rockers are attached by suitable means to the slide *l*, Fig. 11. To this slide *l* is attached the table *k*, which is adapted to slide in a direction corresponding to either of the arrows *m* or *m'*, Fig. 1. The mechanism for accomplishing this purpose and for regulating the amount of movement to be given the table is as follows: To the under side of the table *k* is fastened the rack *n*, Fig. 8. To a projection *l'* of the slide *l* is fastened a stud *o*, Fig. 10, having at its upper end and securely fastened to it a pinion *n'*, engaging with the teeth of the rack *n*. At the lower extremity of the stud *o* is a polygonal head *o'*. A wrench *p*, adapted to fit the head *o'*, having a rather long handle, is passed over the head of the stud *o*, and the lower cap or flange *o''* secured to the head *o'*, thus preventing the wrench *p* from falling off when allowed to rest in the position shown in Fig. 11. Having drawn the wrench into the position shown in Fig. 8, by raising it to the position shown in Fig. 10, and thrusting it back in the direction of the arrow *q* to the position shown by the dotted lines, Fig. 8, and dropping it on the head *o'* again, it is now ready to be again drawn forward to its former position.

It is obvious that the stud, moving in a rigid bearing in a projection of the slide *l*, having firmly secured to it a pinion whose teeth engage with the rack *n*, and having motion given to it by means of the wrench *p*, as aforesaid, will, through the mechanism hereinbefore described, convert motion to the table to which the material is secured.

The material to be operated upon being fastened to the table *k* by suitable means, the machine is put in motion. By moving the handle of the wrench *p* toward the front of the machine the work is brought in contact with the cutter *f* in the vertically moving bar *e*. On the projection *l'* of the slide *l* are two lugs *r* and *r'*. On the front of the table are two ears, *s* and *s'*, either a part of said table or fastened thereto. A screw *t* is threaded into ear *s* in line with the lug *r*. The depth of the cut to be taken at each stroke is gauged by turning the screw *t* outwardly away from the lug *r*, the distance from the lug *r* to the end of the screw at *r''* being the depth of each cut. Another screw *t'* is threaded into the ear *s'* and projects through to the lug *r'* on the projection *l'* of the slide *l*. Firmly fastened to the ear *s'* is a graduated plate *s''*. Into a recess of the plate *s''* is fitted a sleeve *t''*, held in position by a flange at its inner end. The sleeve *t''* is fastened to the screw *t* by means of a key which fits loosely in the shaft and tightly in the sleeve. To the part of the sleeve *t''* extending outside of the plate *s''* is fitted a pointer or index finger *v*, adapted to be clamped in position on sleeve *t''* by means of a screw *v'*. To regulate the depth of the slot to be cut in the work, the screw *t'* is first screwed in until its end contacts with the lug *r'*, the work on the table having first been brought in contact with the cutter *f* in the cutter bar *e*. The index finger *v* is then turned around on the sleeve *t''* to the zero mark on the graduated plate *s''* and clamped in position by means of the screw *v'*. The screw *t'* is then turned outwardly the requisite number of turns, each turn corresponding to a fraction of an inch and being indicated by the index finger on the graduated plate. The screw is then allowed to remain in its position, the work being fed in at each stroke by the other screw *t* until the end of the screw *t'* again contacts with the lug *r'*, when the slot has been cut its required depth.

To the under part of the slide *l*, at both sides, are fastened the quadrants *w* and *w'*. Two ears, *x* and *x'*, fastened to the standard L, overlap flanges on the rockers I and I', thus holding them firmly to their bearings in the standard. By means of this mechanism the table can be tilted in either direction. The amount of slant or the degree of the taper to be cut can be determined by the pointer secured to the rocker I' and moving over the graduated arc on X'. The desired angle being obtained, the table is held in position by clamping the quadrants to the standard by means of the screws *z* and *z'*. On the quadrant *w'* is an ear or lug 1. While the table is in a horizontal position, a taper hole is bored through this lug 1 into the standard L and fitted with a pin 2. When it is desired to quickly bring the table from a tilted to a horizontal position, the screws *z* and *z'* are loosened and the table allowed to move in its bearings K' and K'' until the pin 2 can be inserted into its original bearing. For radially locating the slot in the bore of the work a device, illustrated in Fig. 12, is used. The plate 3 has on its lower face a tongue, which fits into the lateral T-slot of the table and is held in position by the bolts. To the perpendicular surface of this plate, at right angles to the tongue at 7, is fitted by a tongue and groove the plate 4. This plate has two sides, 8 and 9, forming any desired angle, which sides form the same angle to a line 10, passing through the centre of the cutter *f* to the point of intersection of the sides 8 and 9; that is, the angle 8 10 must equal the angle 9 10. To bring the plate 4 into the position illustrated, an adjustment is made by the bolts 11 12. The article can then be placed so that the surfaces 8 and 9 will come in contact with its external diameter, thus radially locating the slot when cut in the bore of the same. This device, when clamped to the table, also tends to keep the work from being moved away from the cutter when in motion.

The column K is fastened to the standard L by means of the bolt 14, Fig. 1, passing through its entire length into the T-slot in standard L and tightened at the top by a nut.

The arm J has two bearings, 15 and 16, adapted to fit the outside of the column K, and adapted to be vertically adjusted thereon for different lengths of work and varying lengths of movements, the latter conforming with the movements of the lower guide bar, as hereinafter described. The key 17, Fig. 6, serves the purpose of keeping the bearing J' in line with the cutter bar *e* and the lower guide bar Q.

The column, in addition to the bolt 14, is firmly held in position by the taper pins 18 18, which operate, in conjunction with key 17 in the slot 19 of the column, to bring the bearing J' into line with the cutter bar *e*.

The mechanism for reversing the cutter bar motion is as follows: On the outer left-hand end of the shaft S, Fig. 5, are two pulleys, T and T', loosely fitting the shaft, one driven by an open, the other by a crossed, belt. Between them is fitted a sleeve 20, which keeps them the proper distance apart and prevents them from coming together. Fitted on the outside surface of this sleeve is loosely fitted another pulley T'', whose outside rim is crowned or tapered both sides from the centre. The taper rim of one side fits the inside taper of the rim of pulley T'. The shaft S is bored hollow, and another shaft, 21, is fitted so as to move freely inside of it. The shaft S and sleeve 20 are slotted at 22. The hub of pulley T'' and the shaft 21 are drilled, and a pin 24 fitted into them and held in position in the hub by two pins passing through projections provided on the hub. The pin 24 fits snugly into the internal shaft 21, and is free to move in the slot 22 of the shaft S and sleeve 20. By moving the shaft 21 in either direction (shown by the double-headed arrow 28) the pulley T'' is carried along with it until it contacts with one of the pulleys T or T', which are running in opposite directions. Motion is thus converted in either direction to the pulley T'', the thrust against the pulleys T and T' being taken up by the collar 29 on one end of the shaft S and the bearing M.

A key running the whole length of and passing through the sleeve 20, Fig. 5, locks the pulley T'' and shaft S together and keeps the pulley T'' from rotating without turning shaft S with it, but does not interfere with its longitudinal motion on the sleeve. The sleeve 20 keeps the pulleys T and T' from being drawn together when the pulley T'' is drawn or thrust away from either of them. On the outer end of the shaft 21 is a collar 31, Figs. 5 and 7, having a deep groove in its periphery. Another shaft 31', is secured in bearings and rests at right angles to shaft 21, to one end of which is fastened a forked projection 33, the arms or fingers of which are adapted to fit loosely in the groove of the collar 31. At the other end of the shaft is a projection or dog 34. To the outer right-hand end of the shaft Z, Figs. 1 and 4, is fastened a circular plate or disk 35, having a circular T-slot on its outer face, near its circumference, as shown in Fig. 14, to which is secured two tappets 36 36, having outward projections and held in position by means of the nuts 37 37 and bolts 38 38. By loosening the hand nuts 37 37 the tappets can be adjusted in any position desired on the disk 35, thus gauging the length of the movement of the lower guide bar. The machine being set in motion and having, say, an upward stroke, the disk revolves, carrying the tappets 36 36 with it until one of them comes into contact with the dog 34 on the shaft 31', Fig. 4. This throws the dog 34 downward, carrying the forked projection 33 with it in the direction of the arrow 39, Fig. 4. This fork 33, by means of the collar 31 and shaft 21, carries with it the pulley T'', drawing it from its contact with pulley T into contact with pulley T', Fig. 5. Pulley T' is running in an opposite direction from that of T. Thus the mechanism is reversed, the cutter bar *e*, Fig. 1, now having a downward motion until the other tappet 36 comes into contact with the dog 33, when the pulley T'', Fig. 5, is thrust back again against T''.

The machine can also be used for getting out keys, an application for this purpose being shown in Fig. 2134, where a key is shown chucked in an attachment ready to be operated upon.

In another form of the machine a round table similar to that of a slotting machine and having a circular feed motion is employed, as shown in Figs. 2135 and 2136. In this example the work table is set at an angle to produce taper keyways by being pivoted at one end, the lugs W being arcs of circles secured in their adjusted position by the nut Z, the adjustment being made by the screw J' and the graduations at M'.

In the smallest sizes of these machines the cutter bar may be operated by a crank motion. Ordinarily, however, a tappet motion is used, as already stated, to operate the clutch motion which is clearly shown in Fig. 2135. R R' is a bar held in guides *g g'*. The tappets U U' are adjustable for distance apart and are secured in circular I grooves. T is a bell crank whose arm *t* moves the friction clutch into and out of gear. S is a lever pivoted at S' and carrying the weight W. Now suppose the motion of the tappet plate to be in the direction denoted by the arrow, and tappet U' will strike the vertical end of R and the weight V' will be moved out of the vertical, causing it to fall over to the right, and through the medium of T *t* operate the friction clutch, causing the direction of motion of the tappet plate to be seen in a direction the reverse of that denoted by the arrow, and the tappet pin U to eventually strike the vertical arm of R again, shifting the friction clutch of the driving pulley and the direction of motion of the cutter bar. Obviously, then, it is the distance apart of the tappet pins U' U that regulates the length of the cutter bar motion.

Fig. 2137 represents a portable key-seating machine, constructed by F. C. Burton & Co., of Erie, Pa.; the range of the standard machine being from $2\frac{7}{16}$ to 12-inch bores, all widths desired from $\frac{1}{4}$ up to $2\frac{1}{2}$ inches, and any length up to 24 inches. There are two arbors and cutter bars. The smallest is $2\frac{7}{16}$ inches in diameter, and is supplied with eccentric taper bushes to accommodate it to all bores up to $4\frac{7}{16}$ inches. The arbor is hollow, and has within it a bar called the guide bar, which is movable up and down by means of a screw at each end. It is planed out through its entire length the necessary size and shape to carry within it a tool bar, which carries two tools of the width desired for the key seat. It is connected to the driving carriage by means of a removable pin, and is driven back and forth through the guide bar, cutting in both directions, being fed down to the desired depths and taper by the screws at each end.

The second arbor is $4\frac{7}{16}$ inches in diameter, and is constructed the same as the other, but in place of using the taper bushes to bring it in position in the bore, the arbor head or flange is made a three-jawed chuck, and indexed to suit different bores, so the

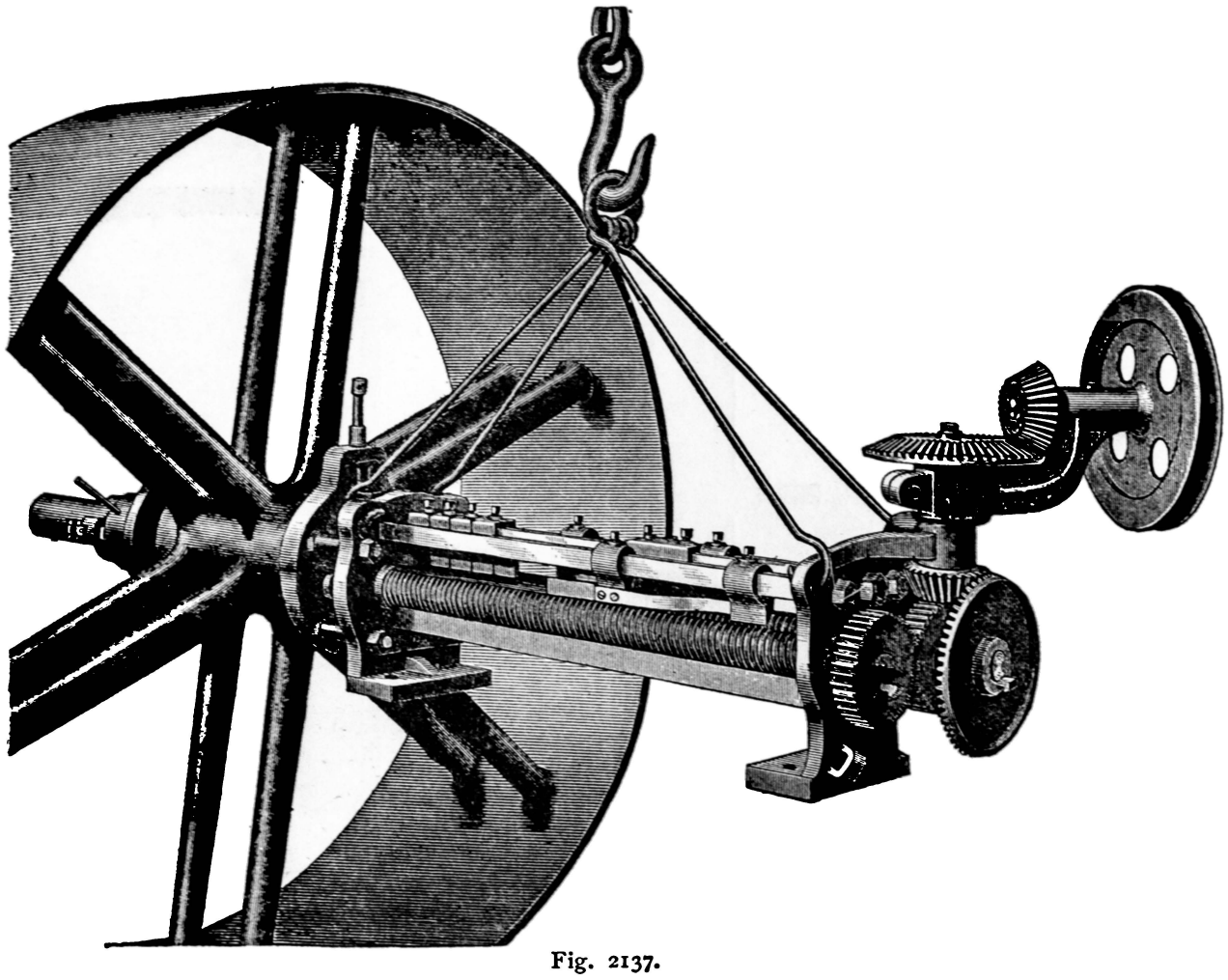

Fig. 2137.

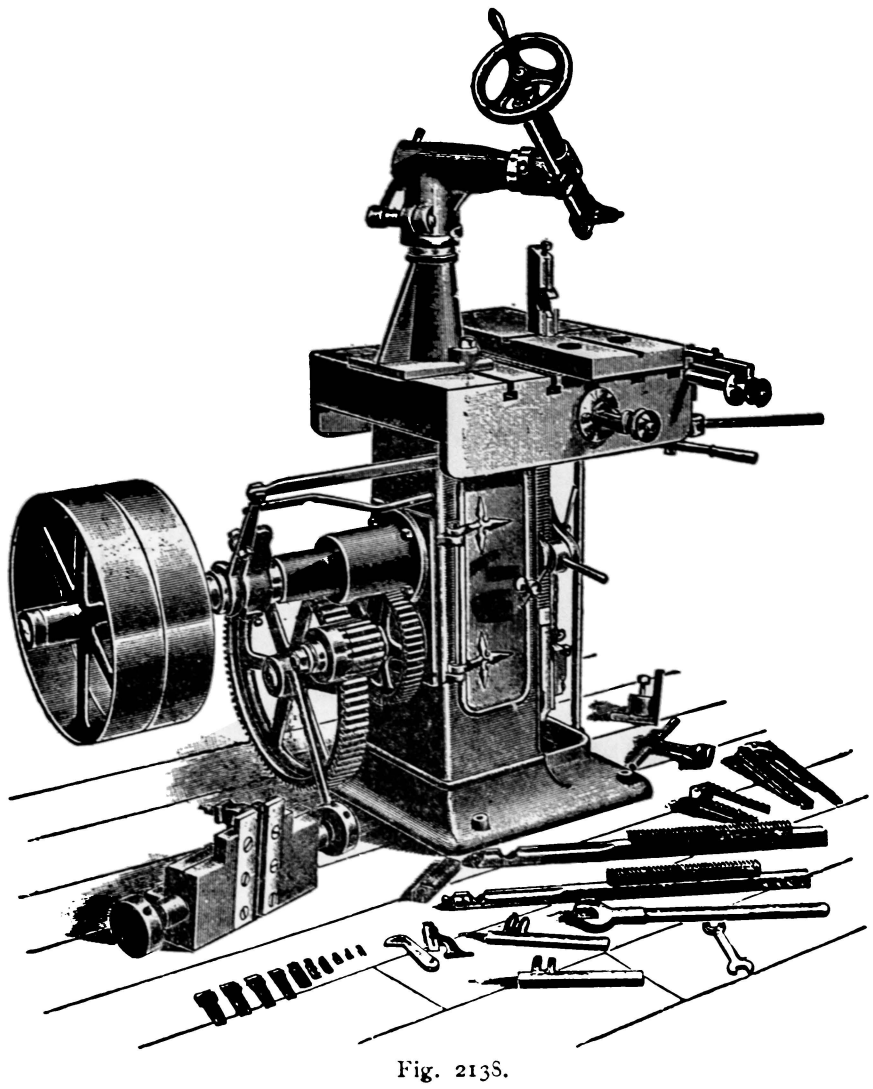

Fig. 2138.

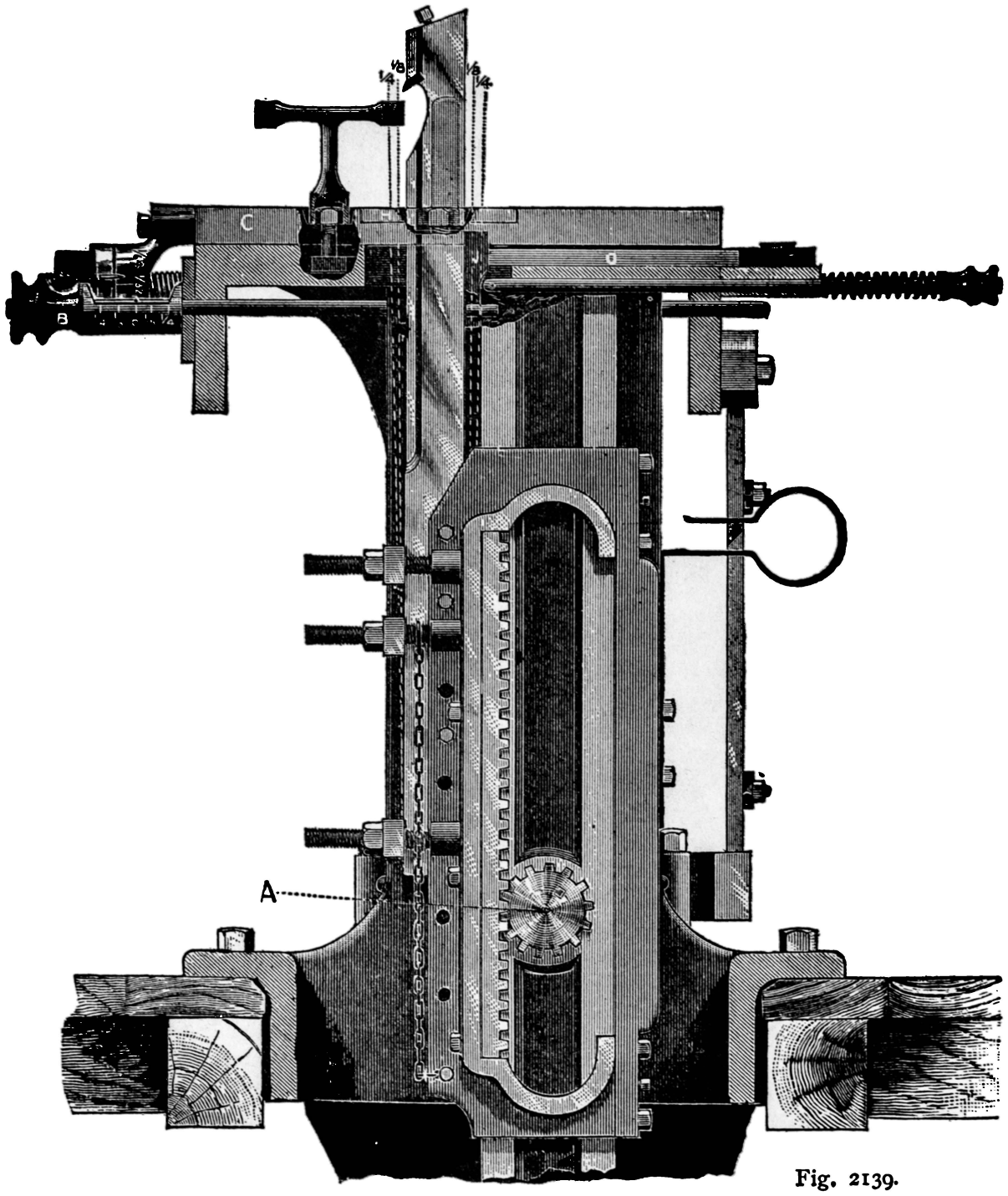

Fig. 2139.

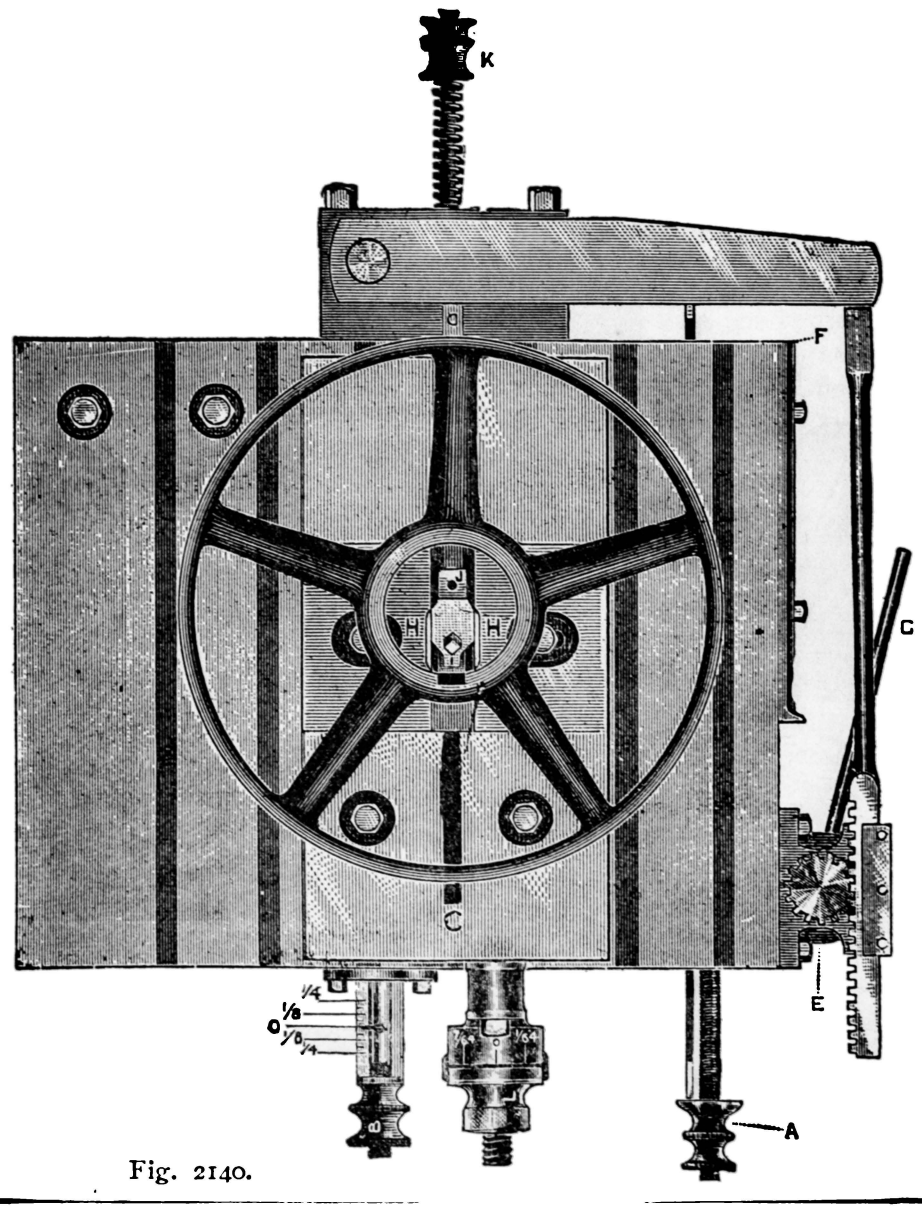

Fig. 2140.

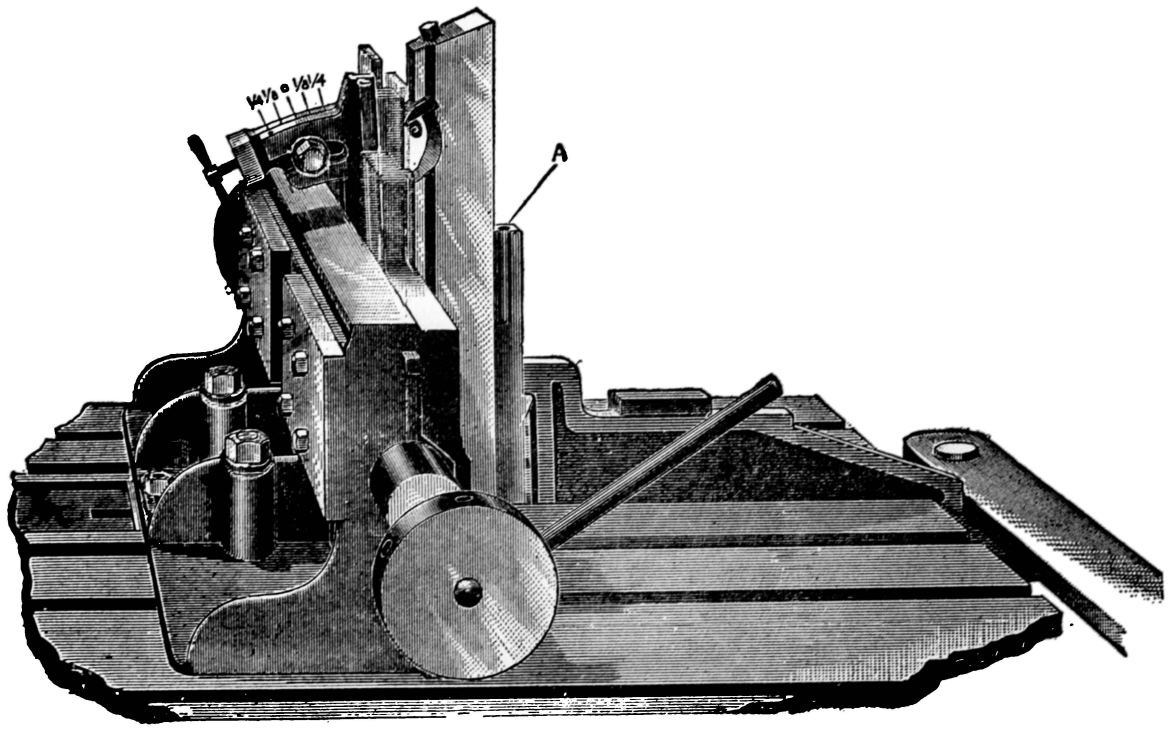

Fig. 2141.

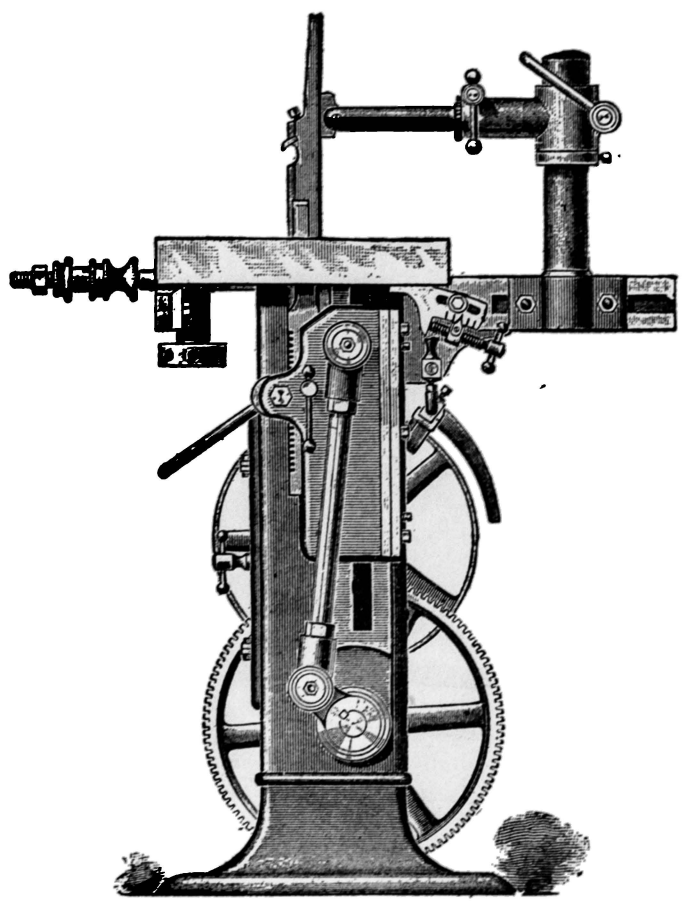

Fig. 2142.

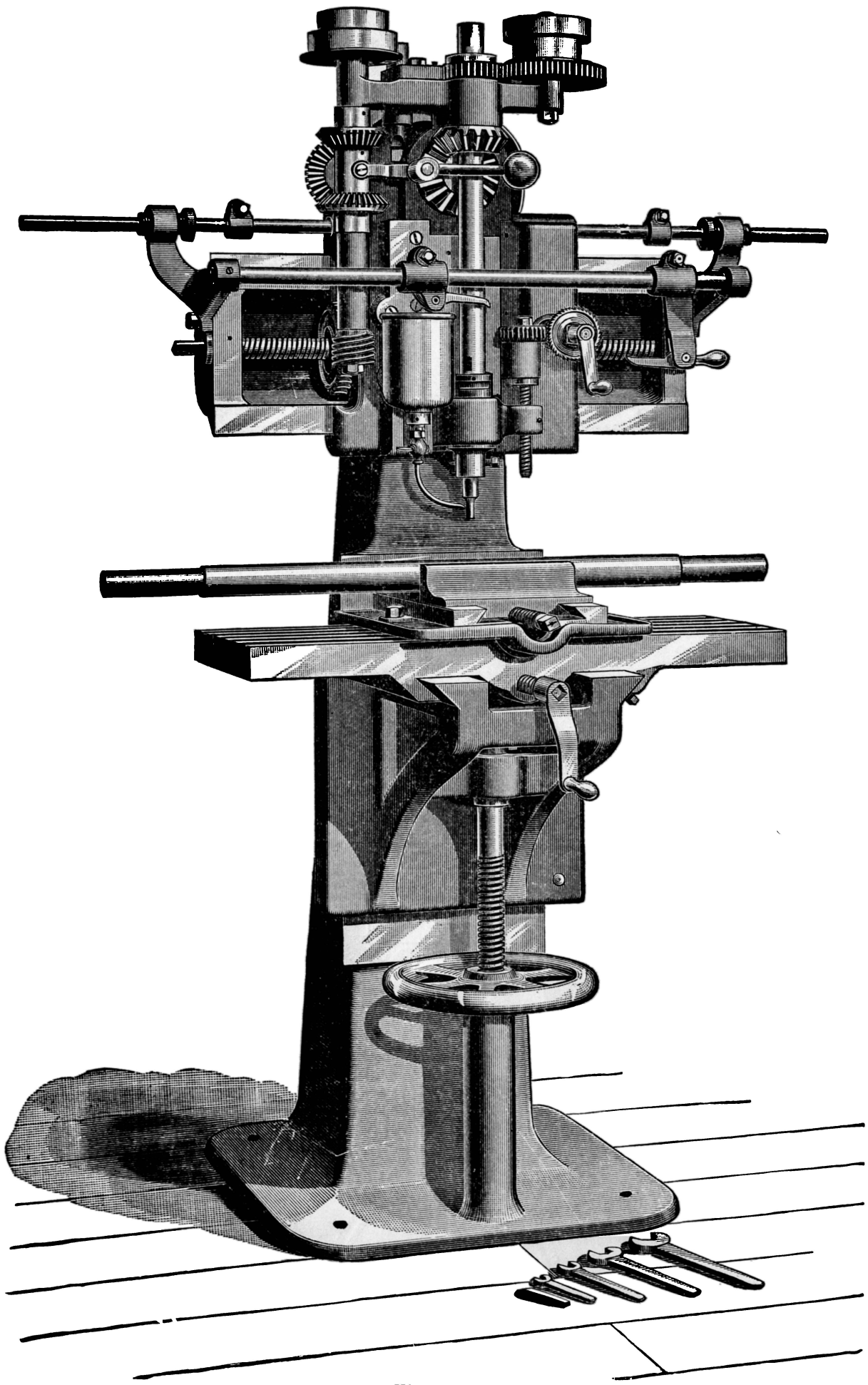

Fig. 2143.

jaws can be adjusted as desired. For the other end of the hub a movable chuck is supplied, and indexed in a similar way.

Both the arbors are supplied with a clamping device, which clamps the work firmly and quickly in place. On each side of the arbor are cut a series of ratchet teeth. A collar with loose ratchet pieces is slipped on the arbor, the pieces dropping into the teeth. By pushing the collar against the hub and turning a nut, the work is held firmly in position. It will be seen by the foregoing description that the bore is the guide by which the machine is set; therefore, no facing of hub is required.

The driving apparatus consists of two parallel screws 2½ inches in diameter, 1½-inch pitch, triple threaded. They are set 6 inches from centre to centre and run in opposite directions; between them is an open-sided nut, which slides from one to the other within a carriage. The nut engages in one screw and travels the desired distance, when it comes in contact with a cam which throws it out of gear, and it is pushed in gear by a spring with the other screw. The nut has two ribs on its top, one of which, by passing behind a guide, holds the nut in gear; the other serves to receive the pressure of the spring. By shifting the cams, springs, and guide, any desired length of stroke can be made. The travelling of the nut carries with it the carriage to which the cutting bar is attached. The screws are driven by cut gears running smoothly, and giving a very strong motion to the cutter bar. The machine can be used in several ways: as a portable, being carried to the work by crane or overhead tramway; or set on a truck constructed to raise or lower it; or set on a bench or feet, and the work lifted to it by hand or by small crane and chain hoist. By the use of a third arbor, seats can be cut in bores as small as $1\frac{3}{16}$ inches by one passage of the cutter.

THE MORTON KEYWAY-CUTTING MACHINE.—A key-seating machine, constructed by the Morton Mfg. Co., of Muskegon Heights, Michigan, is illustrated as follows: Fig. 2138 is the perspective view of the machine, which consists of a vertical cutter bar reciprocated by a pulley and pinion motion, the cutting tool being near the top of the bar, as shown in sectional view in Fig. 2139, and cutting on the downward stroke. The guide upon which the crosshead reciprocates is so constructed that it oscillates from its centre, having bearings at its extremities, and is bored of sufficient diameter at its centre to allow it to form a bearing on the outside of the sleeve in which the main shaft revolves. This practically makes the main shaft and driving pinion centrally located with the guide. Power is supplied to the crosshead by the steel rack and gear on the main shaft. As this guide is adjustable to and fro it will come to a central point where it will be at right angles or square with the table. By moving it back from the said point, the recline of the bar would be such that a keyway finished at this point would have the taper deepest at the bottom side. By inclining or moving the bar from the said point a keyway finished at this point would cut the taper deepest at the top side. From the mechanical principle involved the cutter bar at all times is parallel with the guide, and no matter what the position of the guide is, it is in perfect alignment with the cutter bar, and must necessarily cut a keyway parallel with it.

By referring to Fig. 2139, on the front of the table will be seen an index with scale and pointer with graduations marked O ⅛ ¼. O represents vertical point and ⅛ ¼, inch taper to the foot.

The feed is applied by means of a rack and pinion movement operated by lever G, Fig. 2140. A represents the hand wheel for adjusting the depth of cut, and F represents the stop gauge, which limits the movement of the lever, and is adjusted to regulate the depth of the keyway.

The machine is provided with an adjustable self-centring top plate or chuck C, Fig. 2140, which is provided with T-slots for the purpose of bolting it firmly to the machine, and is held in position and has perfect alignment with the table by means of tongues on its lower side. This top plate is also provided with adjustable slides suitable for the different widths of the cutter bars, and forms a bearing on each side of the bar. This adjustable slide carries projections which come up beside the cutter bar, and as the cutter is centrally located in the bar the projections are an equal distance each side of the cutter. In this way the work is centred by the bore of the wheel or the pinion being cut, Fig. 2140. In connection with this is a micrometer adjustment for setting the machine for the depth of keyways, the workings of which can be understood by referring to L, Fig. 2140. With this device the machine may be set to cut a keyway of a given width, depth, and taper, without the use of a rule, and will cut the keyway tapering deepest at either the top or bottom side, work remaining the same side down on the table, and accurate work will be accomplished, and as all work is centred from the bore of the wheel or pinion, duplicate work is insured.

By referring to Fig. 2139 it will be seen that the cutter is inserted near the upper extremity of the bar and held in place by means of a set screw in the end of the bar. Underneath and adjacent to the cutter will be seen a receptacle which permits the shavings to roll up and accumulate while the cutter is performing its work. Immediately after the cutter passes down through the work the chips drop out. It is not necessary for the cutter to extend out beyond the rib in the bar—only enough to permit it to take its cut, thus making the cutter self-contained within the bar.

The guide is supplied at its upper extremity with a hook bolt and spring which passes through the back side of the machine K, Fig. 2140, and draws the guide back as soon as the pressure is relieved by the feed lever. This allows the cutter to be relieved on the up stroke, and preserves the cutting edge and gives freedom for chips to pass out of the way.

The patent key-making attachment is easily placed on the machine, an application of which can be seen by referring to Fig. 2141. This consists of an angular vice provided with a tongue on the bottom side, which is fitted to a slot in the top plate of the machine. The vice oscillates upon the said plate for the purpose of aligning the key-making attachment with the cutter, which is so formed that it gives a shearing cut. When in line with the cutter, this plate is securely fastened to the vice by means of bolts, and allows the vice to be moved to and from the cutter without changing the alignment with the cutter itself. This vice is provided with adjustable backings of different widths and a scale corresponding with the different measurements on adjustable scale of key-seating machine. This attachment is also used for removing the stock and planing off small strips and a great variety of work which will naturally appear when the machine is operated in the shop.

The binding attachment consists of a base, with a tongue on its lower side which is fitted to a T-slot in the machine. The end of the said base being turned, to this is fitted an angular arm, on the extremity of which is a swivel nut. This nut forms a bearing for the hand wheel, screw, and fork, and is provided with gripping devices to hold the attachment firmly in position. It is also provided with a notched fork, which is placed on the top of work or wheel. The attachment is set so that as the swivel on the end of the fork comes in contact with the notches, the binding screw, which has a slight incline, gives a forward pressure, thus centring the work with the projection H H, Fig. 2140. This attachment almost entirely dispenses with binders and bolts.

The No. 1, or 6-inch stroke machine, Fig. 2142, is somewhat different in construction, the taper being obtained by oscillating the guide, which is furnished with graduations for taper adjustment and appliances for securing the guide at any desired taper. The top plate is gibbed and fitted to the top of the column, and is furnished with feed adjustment.

Projections are fitted to the adjustable plate, which form a bearing on each side of the bar, to which the work may be centred by the bore of the wheel or pinion being cut. It has micrometer adjustment for setting for depth and stop gauge for limiting the depth of keyway. Sliding tables are only used on small-sized machines, as, if used for heavy work, they are very difficult to feed.

COTTER AND KEY SEAT DRILLING MACHINE.—Fig. 2143 illustrates a machine for cutting slots or key seats by the employment of a form of drill. The work is held in chucks upon a knee adjustable for height upon a vertical slide. The cutter drill is carried in a vertical spindle in a carriage traversing while being revolved for a horizontal slide. Tappets above this slide regulate the amount of the horizontal motion, and, therefore, the length of key seat cut. The feed is put on automatically at the end of each slide traverse.

Chapter XXV.—VICE WORK.

VICE work may be said to include all those operations performed by the machinist that are not included in the work done by machine tools. In England vice work is divided into two distinct classes, viz., fitting and erecting. The fitter fits the work together after it has been operated upon by the lathe, planer, and other machine tools, and the erector receives the work from the fitter and erects it in place upon the engine or machine.

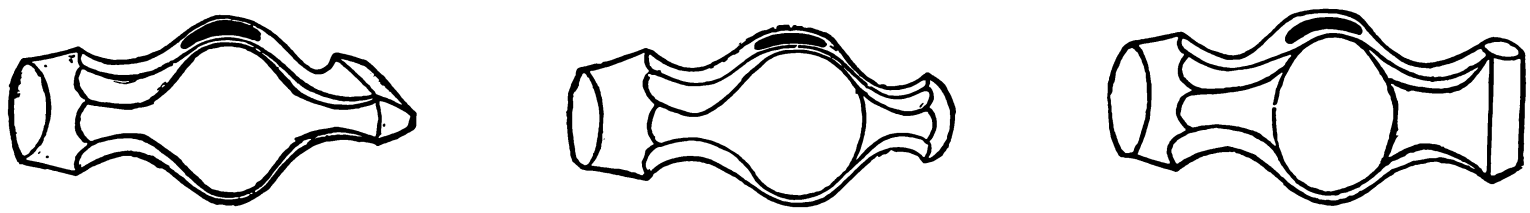

Fig. 2143*a*.

Fitting requires more skill than turning, and erecting still more than fitting, but it is at the same time to be observed that the operations of the erector include a great many of those of the fitter.

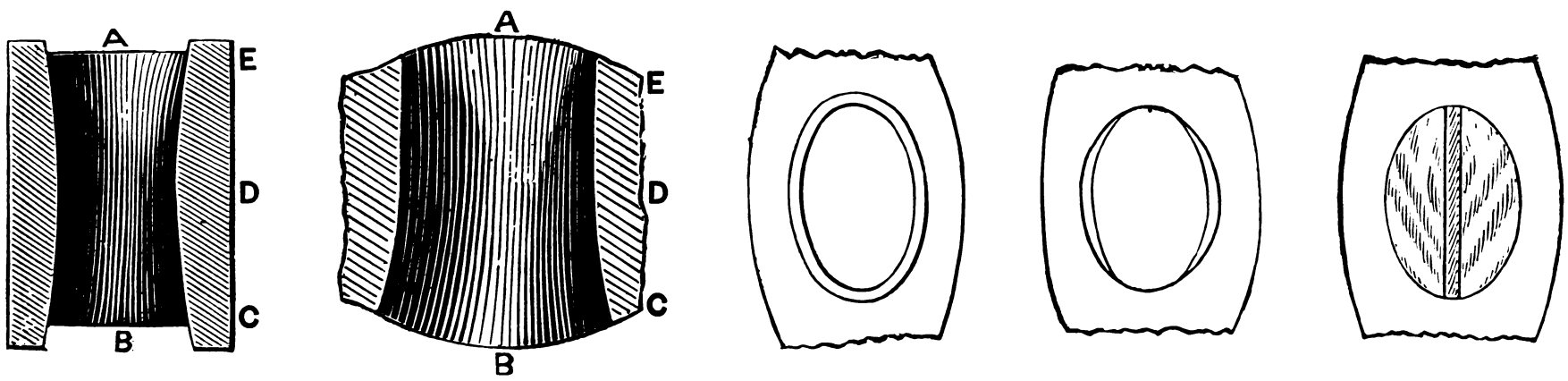

Fig. 2143*b*.

The machinist's hammer is made in any of the three forms shown in Fig. 2143*a*; that on the left hand being the cross pane or pene; that in the centre the ball pene, and that on the right the straight pene hammer. The proper shape for the eye of the hammer is shown in Fig. 2143*b*, A representing the top of the hammer; and it is seen that the eye is in the sectional edge view widened out at A and B, and this widening extends all around the eye, as shown in the bottom view, whereas at the top it is widened out at the sides only, so that when it is handled and wedged the handle will completely fill the eye, while at the same time the widening out of the eye, as shown in top and bottom views, completely locks the eye to the handle.

The ball pene hammer is used for what is termed pening, which consists of stretching the outside skin of the work so as to alter the shape of the work.

Fig. 2144 represents a strap requiring to be closed across A, the pening being at C or D. But as pening at D would bend the crown and unpair the bed of the brasses, it is preferable to pene at C. In either case the jaws will close as denoted by the dotted lines.

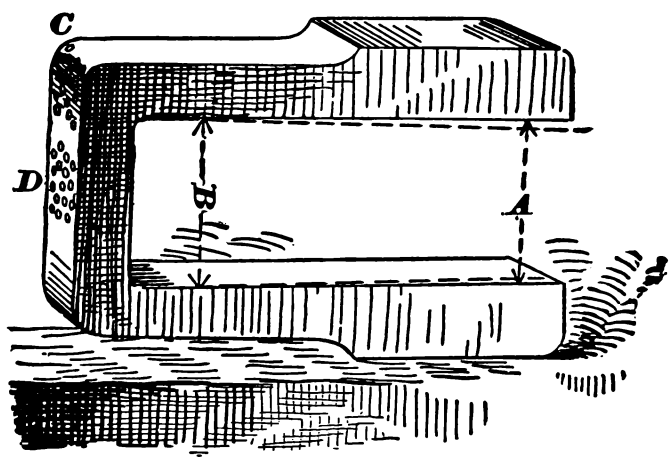

Fig. 2144.

Fig. 2145 represents another common form of connecting rod strap, and in this case the pening may be most quickly and effectively done at the crown as denoted by the dots; and as this would alter the inside curve, the brass or box fitting into it must be refitted. In case the pening should be overdone it is better to modify it by filing away some of the pened surface.

Cast iron is more rapidly affected by pening than either wrought iron or steel. One of the most useful applications of pening is in the case of moulding patterns, which in time may become warped

from the rapping of the pattern in the mould, and this warping may be corrected by judicious pening, or suppose that a number of plates, such as represented in Fig. 2146, having been cast, it is found that the ends of the tongues A B curl up when cooling in the mould, then the tongues may be pened as at C D, throwing

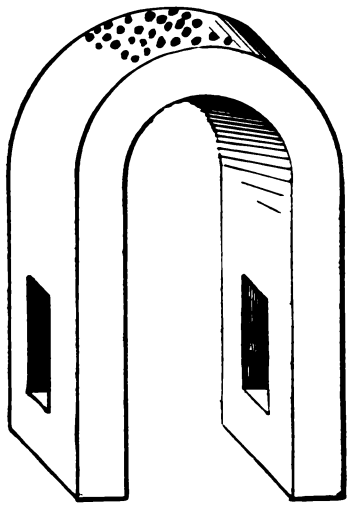

Fig. 2145.

them down to the requisite amount, and thus moulding the pattern to accommodate the curling in cooling.

The riveting usually performed by the machinist is generally upon cold metal. The blows in this case should fall dead and the riveting be performed with a view to stretching the metal uniformly and evenly over the surface to be riveted.

An excellent example of cold riveting is given in the crank

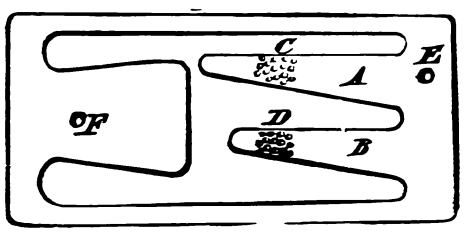

Fig. 2146.

pin P in Figs. 2147 and 2148. C is the crank (both being shown in section). The end of the pin should be recessed as shown at A, so that it may be the more readily riveted outward to fill the countersink shown in the crank at B, B. The crank-pin is rested upon a piece of copper D interposed between it and the

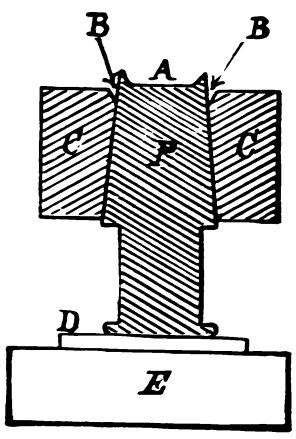

Fig. 2147.

iron block E to prevent damage to the finished face of the crank-pin.

The riveting blows should be given with a ball-faced hammer, and delivered with a view to stretch the whole end face of the crank-pin evenly. Otherwise the riveted surface will be apt to split as shown. This usually occurs from not riveting the area at and near the circumference sufficiently, although it may occur from riveting that part of the area too much. The line of travel of the hammer should not be directly vertical, but somewhat lateral in a direction from the centre towards the circumference. If the countersink is a deep one, it is desirable to leave the crank-pin sufficiently too long, so that after the riveting has proceeded some time the surface of the metal which has become condensed and crystallized from the direct impact of the hammer blows, may be chipped away, leaving a surface that is swollen by the riveting without being so much condensed. This enables a much greater spreading of the metal without splitting it.

If in this class of work the riveted piece (as the crank-pin) is not driven in very tight before riveting, the riveting blows will be

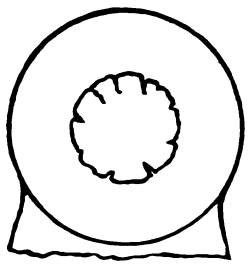

Fig. 2148.

apt to jar the pin back. Hence, it is necessary to occasionally drive the pin home. The riveting should proceed equally all over, as if one side be riveted in advance of the other it tends to throw the pin out of true. When, however, the riveting begins to bed the pin, four equidistant places may be riveted home in advance so as to bring the pin home and hold it firmly.

THE CHISEL.—The machinist's cold chisel is made from the two forms of steel shown in Figs. 2149, 2150, and 2151, and of these the former is preferable because it has two broad flats diametrally opposite and these form a guide to the eye in holding the chisel on the grindstone, and aid in grinding the facets that form

Fig. 2149.

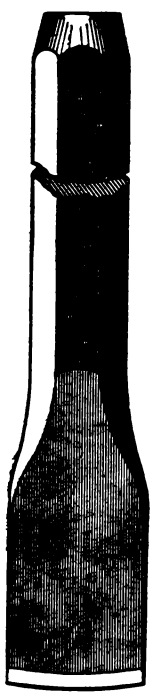

Fig. 2150.

Fig. 2151.

the cutting edge true. Furthermore, as the cutting edge is in the same plane as these flats they serve as a guide to denote when the chisel edge lies parallel to the work surface, which is necessary to produce true and smooth chipping.

The width of the chisel may be made greater, as in Figs. 2152 and 2153, for brass or cast-iron work than for wrought iron or steel for the following reasons. On account of the toughness and hardness of wrought iron and steel the full force of a $1\frac{3}{4}$ lb. hammer, having a handle 13 inches long, may be used on a chisel about $\frac{7}{8}$ inch wide without danger of causing the metal to break out below the chipping line, but if such a chisel be used with full force blows upon cast iron or brass the metal is apt to break out

in front of the chisel, the line of fracture often passing below the level it is intended to chip down to. Hence if a narrow chisel is used lighter blows must be delivered. But by using a broader chisel the force of the blow is distributed over a longer length of cutting edge, and full force blows may be used without danger of breaking out the metal.

The cutting end of the chisel should be kept thin, as in that case it cuts both easier and smoother. The total length of a chisel should not when new exceed 8 inches, for if made longer it is not suitable for heavy or smooth chipping, as it will bend and

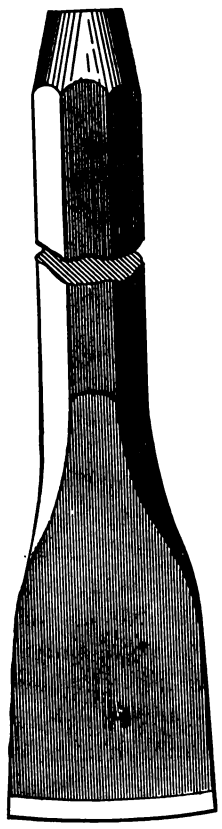

Fig. 2152.

Fig. 2153.

spring under heavy blows, and cannot be held steadily. The forged part should not exceed about 2½ or 3 inches in length, as a long taper greatly conduces to springiness, whereas solidity is of great importance both to rapid and smooth work. The facets forming the cutting edge should be straight in their widths, as at B in Fig. 2154, and not rounded as at A, so that the face next to the work may form a guide in holding the chisel at the proper angle to maintain the depth of the cut. This angle depends upon the nature of the material to be cut; the facets forming an angle one to the other of about 65° for cast steel and about 50° for

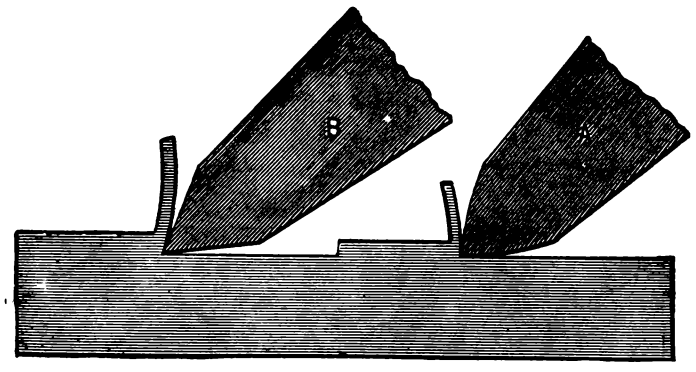

Fig. 2154.

gun metal or brass. The more acute these angles the nearer the body of the chisel lies parallel with the work and the more effective the hammer blows. Thus in Fig. 2155 chisel C is the position of the chisel for wrought iron, and position D is for steel. The angles should always be made, therefore, as acute as the hardness of the material will permit. If they are too acute the cutting edge will be apt to bend in its length, while if not sufficiently acute they will not cut keen enough; hence the object is to make them as acute as possible without causing the cutting edge to bend in its length. For copper and other soft metals the angle may be about 30° or 35°, the chisel end being kept thin so that it may not become wedged between the work and the chipping, which will bend but little, and is, therefore, apt to grip the wedge end of the chisel. The cutting edge should be slightly rounded in its length, which will strengthen it and also enable a fine

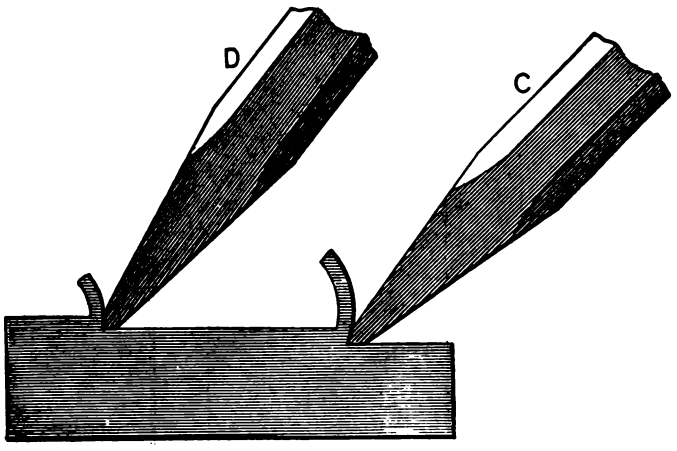

Fig. 2155.

finishing clip to be taken off, as in Fig. 2156, the width of the chip not extending fully across the chisel width so that the corners are not under duty and are not, therefore, liable to break, or dig in and prevent smooth chipping. In some practice the edge is made straight in its length, as shown in Fig. 2149, which is

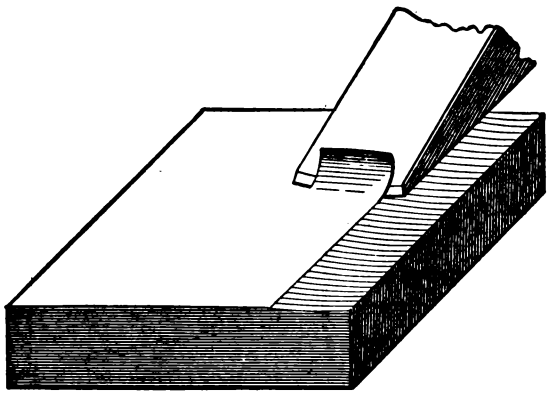

Fig. 2156.

permissible in heavy chipping when a cape chisel has been used, but in any event an edge rounded in its length is preferable. If the edge is hollow in its length, as shown in Fig. 2157, and magnified in Fig. 2158, the chip acts as a wedge to force the corners outwards as denoted by the arrows, causing them to break under

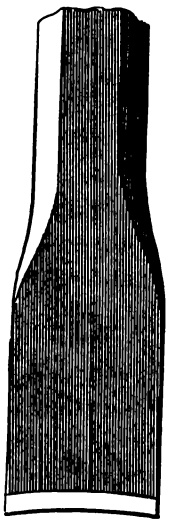

Fig. 2157.

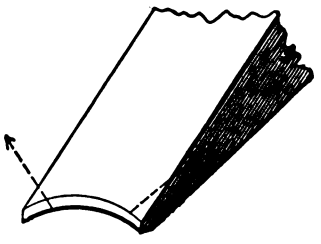

Fig. 2158.

a heavy cut, and, furthermore, a smooth cut cannot be taken when the corners of the chisel meet the work surface.

If the facets are ground under on one side, those on the other, as in Fig. 2159, the edge will not be parallel with the flats of the chisel, so that in holding it the flats will not form a guide to determine when the edge lies parallel to the work surface as it should do. The edge should also be at a right angle to the length of

chisel, as denoted by the lines, as in Fig. 2160, for if not at a right angle the chisel will be apt to move sideways after each blow, and cannot be held steadily.

The chisel should be held as close to its head as possible, so that the hand will steady the head as much as possible, and should be pushed forward firmly and steadily to its cut, which will greatly facilitate rapid and smooth chipping, and for wrought iron

Fig. 2159.

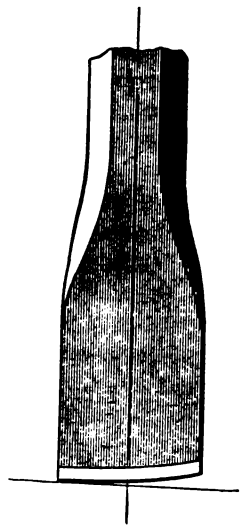

Fig. 2160.

and copper it is found better to occasionally moisten the chisel with oil or water, the former being preferable.

Messrs Tangye, of Birmingham, have introduced the employment of chisel holders, such as shown in Fig. 2161, the object being to fit to each holder a number of short pieces of steel for chisels so that a number can be ground or forged at one time; obviously chisels of different shapes require different forms of handle.

When a heavy cut is to be taken the cape (Fig. 2162) chisel is

Fig 2161.

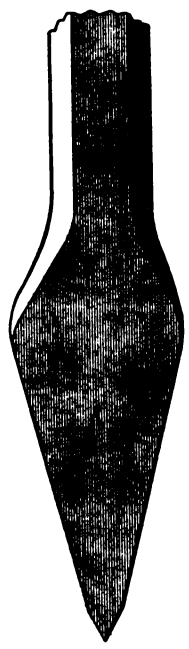

Fig. 2162.

used, first to carry through grooves or channels, such as shown in Fig. 2176 at A, B, and C, the distance apart of these grooves being slightly less than the width of the flat chisel, whose cut is shown partly carried across at D in the figure. The width of a cape chisel should gradually decrease from A to B in Fig. 2163, so that its side will be free in the groove it cuts, and the chisel head will be free to be moved sideways, and the direction of the groove may be governed thereby. If the chisel end be made parallel, as at C in Fig. 2164, it will have no play in the groove and the head cannot be moved; hence if the groove is started out of line, as it is apt to be, it will continue so.

The round-nosed chisel, Figs. 2165 and 2166, may be straight from H nearly to the point G, but should be bevelled at and near G, so that the chisel head may be raised or lowered to govern the depth

Fig. 2163.

Fig. 2164.

of the cut. Its round nose should also be wider than the metal

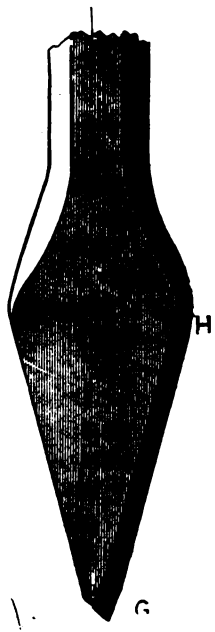

Fig. 2165.

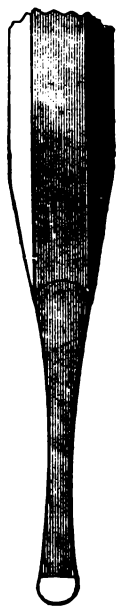

Fig. 2166.

higher up, so that the chisel head may be moved sideways to

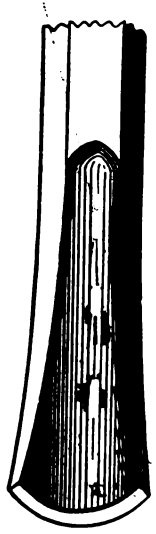

Fig. 2167.

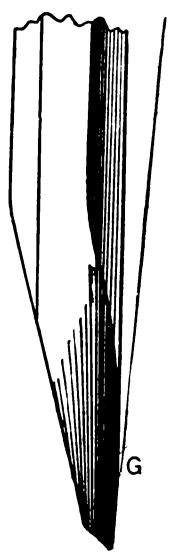

Fig. 2168.

govern the direction of the cut as in the cape chisel. The cow mouth chisel, Figs. 2167 and 2168, should be bevelled from G to

the point to enable the governing of the depth of the cut, and should be of greater curvature than the corner it is to cut out, so that its corners cannot wedge in the work.

The oil groove chisel, Figs. 2169 and 2170, should be wider at

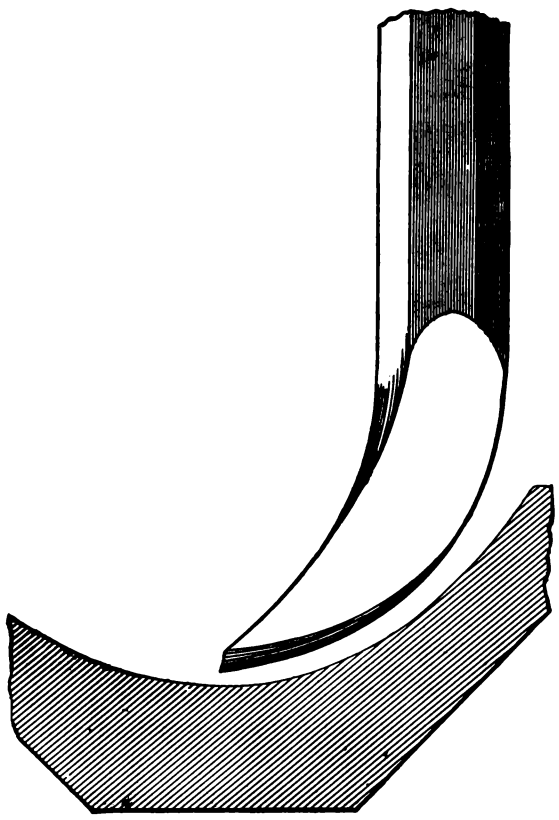

Fig. 2169.

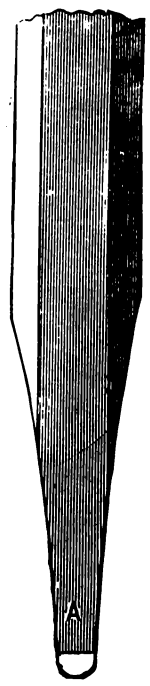

Fig. 2170.

the cutting edge than at A for reasons already stated, and of less curvature than the bore of the brass or bearing it is to cut the oil groove in.

The diamond point chisel, Figs. 2171 and 2172, may be made in two ways. First, as in Figs. 2173 and 2174, for shallow holes, and as in Figs. 2171 and 2172 for deep ones. In shallow holes the chisel can be leaned over, as in Fig. 2176 at *y*, whereas in

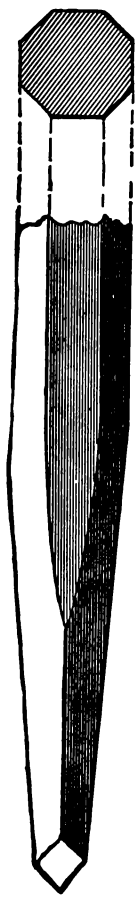

Fig. 2171.

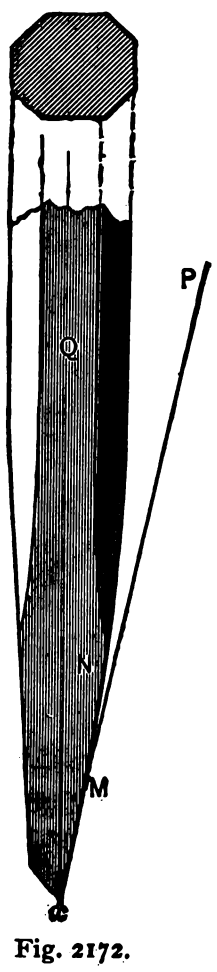

Fig. 2172.

deep ones it must be held straight so that the chisel body may not meet the other side of the hole, slot, or keyway. The form shown in Fig. 2172 is the strongest, because its point is brought into line with the body of the steel, as shown by the line Q. The side chisel, Fig. 2175, for cutting out the sides of keyways or slots, should be bevelled from W to the cutting edge for the reasons already given, and straight from W to V, the line V W projecting slightly above or beyond the body U. An application of the cow mouth chisel is shown at L, and one of the side chisel is shown at Z in Fig. 2176. All these chisels are tempered to a blue color.

The chisel that is driven by hammer blows may be said to be

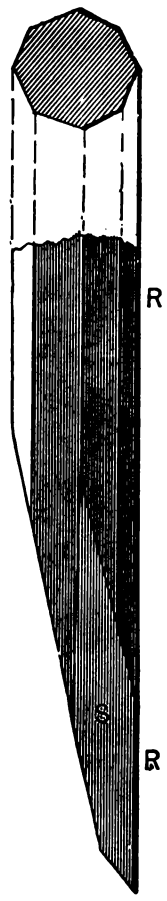

Fig. 2173.

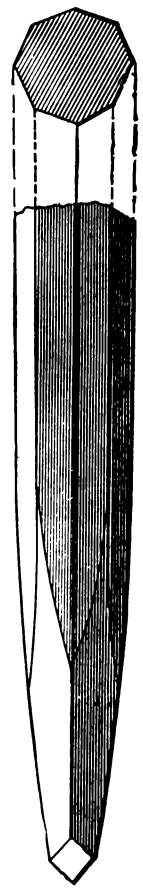

Fig. 2174.

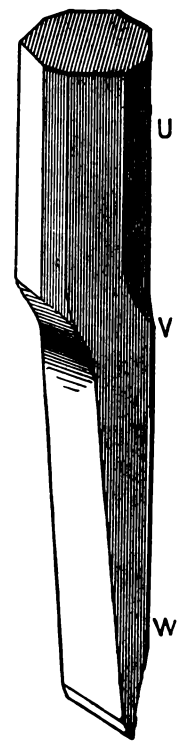

Fig. 2175.

to some extent a connecting link between the hammer and the cutting tool, the main difference being that the chisel moves to the work, while the work generally moves to the cutting tool. In many stone-dressing tools the chisel and hammer are combined, inasmuch as that the end of the hammer is chisel shaped; an example of this kind of tool being given in the pick that flour

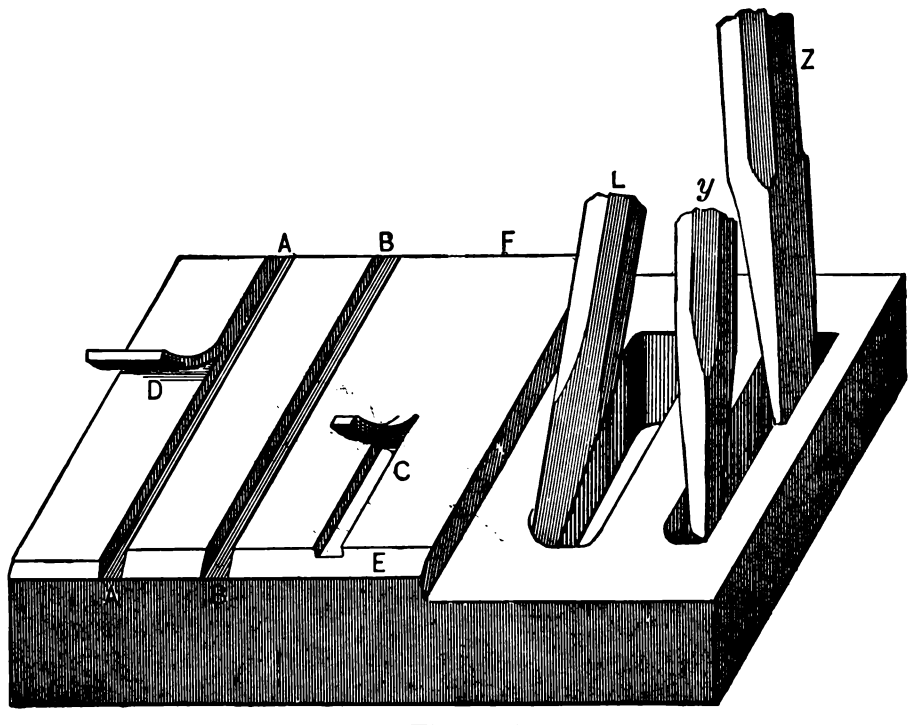

Fig. 2176.

millers use to dress their grinding stones. On the other hand we may show the connection between the chisel and the cutting tool by the fact that the wood-worker uses the chisel by driving it with a mallet, and also by using it for a cutting tool for work driven in the lathe. Indeed, we may take one of these carpenter's chisels and fasten it to the revolving shaft of a wood-planing

machine, and it becomes a planing knife; or we may put it into a carpenter's hand plane, and by pushing it to the work it becomes a plane blade. In each case it is simply a wedge whose end is made more or less acute so as to make it as sharp as possible, while still retaining strength enough to sever the material it is to operate upon.

In whatever form we may apply this wedge, there are certain well-defined mechanical principles that govern its use. Thus when we employ it as a hand tool its direction of motion, under hammer blows, is governed by the inclination of the face which meets the strongest side of the work, while it is the weakest side of the material that moves the most to admit the wedge and therefore becomes the chip, cutting, or shaving. In Fig. 2177, for example, we have the carpenter's chisel operating at A and B to cut out a recess or mortise, and it is seen that so long as the

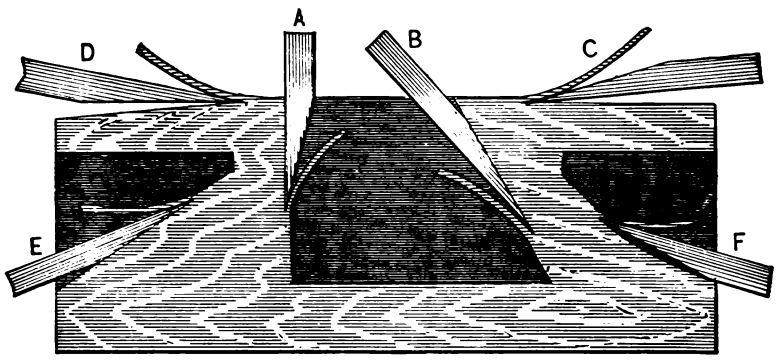

Fig. 2177.

face of the chisel that is next to the work is placed level with the straight surface of the work the depth of cut will be equal; or in other words, the line of motion of the chisel is that of the chisel face that lies against the work. At C and D is a chisel with, in the one instance, the straight, and in the other the bevelled face toward the work surface. In both cases the cut would gradually deepen because the lower surface of the chisel is not parallel to the face of the work.

If now we consider the extreme cutting edge of chisel or wedge-shaped tools it will readily occur that but for the metal behind this fine edge the shaving or cutting would come off in a straight ribbon, and that the bend or curl that the cutting assumes increases with the angle of the face of the wedge that meets the cutting, shaving, or chip.

I may, for example, take a piece of lead, and with a penknife held as at A, Fig. 2178, cut off a curl bent to a large curve, but if

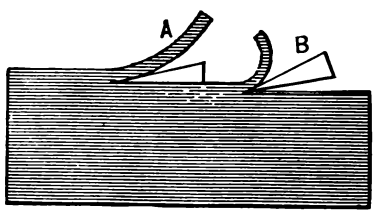

Fig. 2178.

I hold the same knife as at B it will cause the shaving to curl up more. Now it has taken some power to effect this extra bending or curling, and it is therefore desirable to avoid it as far as possible. For the purpose of distinction we may call that face of the chisel which meets the shaving the top face, and that which lies next to the main body of the work the bottom face. Now at whatever angle either face of the chisel may be to the other, and in whatever way we present the chisel to the work, the strength of the cutting edge depends upon the angle of the bottom face to the line of motion of the chisel, and this is a principle that applies to all tools embodying the wedge principle, whether they are moved by a machine or by hand.

Thus, in Fig. 2179 we have placed the bottom face at an angle of 80° to the line of tool motion, which is denoted by the arrow, and we at once perceive its weakness. If the angle of the top face to the line of tool motion is determined upon, we may therefore obtain the strongest cutting edge in a hand-moved tool by causing the bottom angle to lie flat upon the work surface.

But in tools driven by power, and therefore accurately guided in their line of motion, it is preferable to let the bottom face clear the work surface, save at the extreme cutting edge. The front face of the wedge or tool is that which mainly determines its keenness, as may be seen from Fig. 2180, in which we have the wedge or tool differently placed with relation to the work, that in position

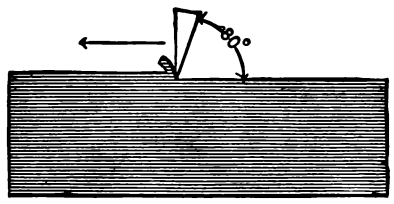

Fig. 2179.

A obviously being the keenest and less liable to break from the strain of the cutting process.

If we now turn our attention to that class of chisel or wedge-shaped tools in which the cutting edge is not a straight line, but may be stepped or curved—as, for example, the carpenter's plane blade—we shall find that so long as the blade stands at a right angle to the surface it is operating upon, as in Fig. 2183 at B, the shape of surface it cuts will exactly correspond to the shape of its

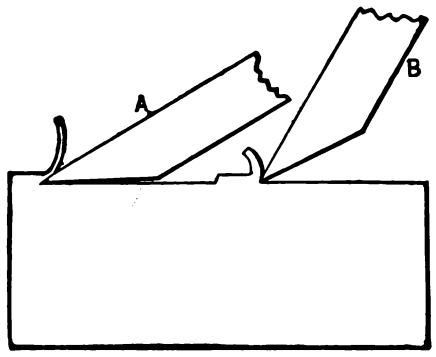

Fig. 2180.

cutting edge; but so soon as the tool is inclined to its line of motion its cutting edge will, if curved, produce a different degree of curvature on the work.

Suppose, for instance, that we have in the figure a piece of moulding M and a plane blade B, and the length of the cutting edge is denoted by A, Fig. 2182; now suppose that the blade is inclined to its line of motion (as in the case of carpenters' planes) and stands at C, Fig. 2183: we then find that the cutting

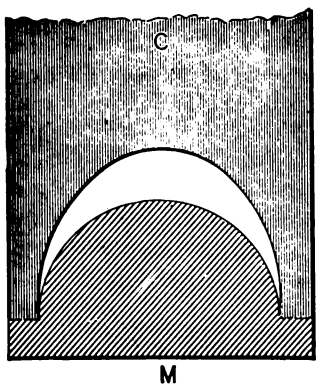

Fig. 2181

edge must extend to the length or depth D, and it is plain that the depth of the curve on the moulding is less than the depth of the cutting edge that produces it; the radius E being less than of D, so that if we place the cutter C upright on the moulding it will appear as shown in Fig. 2181. If, therefore, we are required to make a blade that will produce a given depth of moulding when moved in a straight line and presented at a given angle to the work, we must find out what shape the blade must be to produce the given shape of moulding, which we may do as follows.

In Fig. 2184 let A be a section of the moulding, and if the blade or knife is to stand perpendicular, as shown at B, Fig. 2183, and if it is moved in a straight line in the direction of the length of the work, then its shape would necessarily be that shown at B, Fig. 2184, or merely the reverse of A. In the position mentioned it could be used only as a sweep applicable to some few uses, but

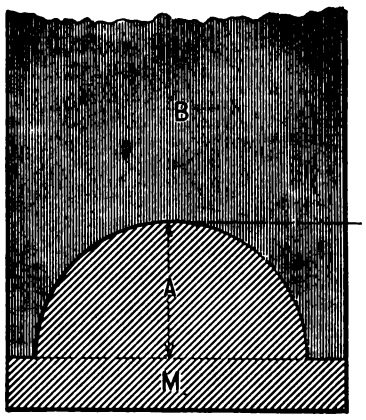

Fig. 2182.

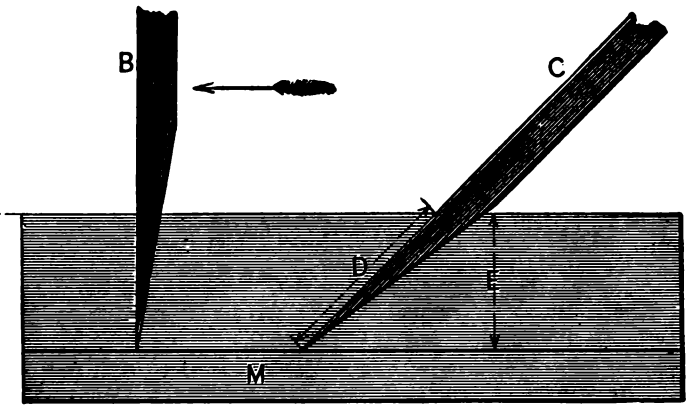

Fig. 2183.

not adapted to cutting. To become a cutting tool it must be inclined and stand at some angle of less than 90° to its line of motion.

Thus in Fig. 2185 D B E represents the bottom of the moulding and line of motion of the cutter, and A B the cutter perpendicular to it, the highest point of the cutting edge, as *c* of Fig. 2184,

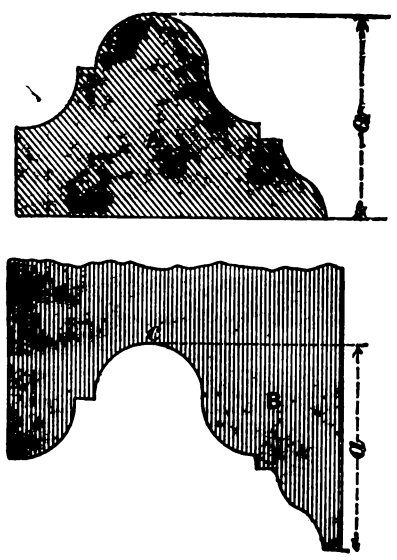

Fig. 2184.

being at *c*, Fig. 2185. The height or thickness of the moulding cut would be the space between the lines E B D and *e c f*, but the cutter assuming the position B C at an angle of 30° from A B, the point *c* is brought to *d*; consequently the highest line of the moulding would now be *g d h*, and its thickness less. This is further exhibited in Fig. 2186, where *a* represents the original

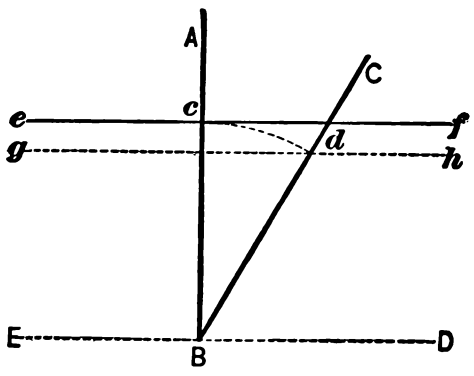

Fig. 2185.

depth section of Fig. 2184 that would be formed by knife B of Fig. 2184 when standing perpendicular; and G shows the depth with the same knife when placed as B C, Fig. 2185, or at 30° inclination, and H shows the depth that would be cut with the same knife or cutter at 45°. It is now evident that every change in the inclination of the same cutter would effect a change in the shape of moulding which it cuts, and to produce a given style of moulding the shape of the cutter must be decided by its inclination, or the angle at which it is used.

The method of projecting a given section of moulding in order to exhibit the form that the curve of the opening should assume on the face of the knife, is shown in Fig. 2187. Upon a horizontal line A B C D draw a section of the required style of moulding, as shown at A E B. To the right of this draw a line, as F C, to meet the base line A B C D, and as F C represents the cutter, it must stand at the same angle that the proposed cutter is to have—in this particular example 30° from the perpendicular. From the highest point of the section A E B draw a horizontal line E G, meeting F C in G. From points G and C draw lines, as C J and

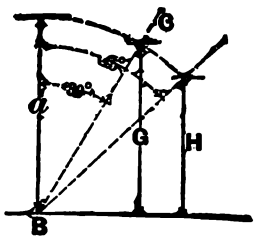

Fig. 2186.

G H, of any convenient length, at right angles to F C. At any distance from G H draw K L parallel to G H, and upon K L trace the section of moulding A E B, as K M L. Draw lines from the extreme edges K and L of K M L, as K N, L J, perpendicular to K L, cutting G H and meeting C J at N and J. E G being parallel to A B C D, G will be the point on the cutter where the top E of the moulding will come on the highest point of the cutting edge, and C G will be the entire length of cutting edge or height of

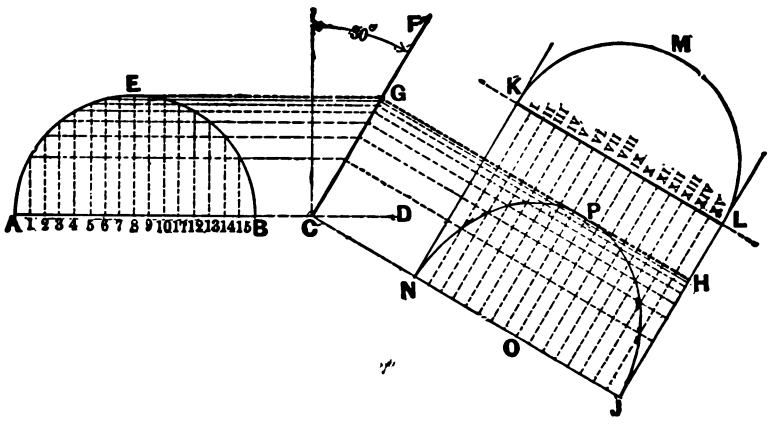

Fig. 2187.

opening measured on the face of the cutter F C. C J being drawn from the lowest point C of the cutter and G H being drawn from G, the highest cutting point, both lines at right angles to G C, then their distance from each other, as P O, must obviously represent the extreme height of opening in the cutter in its new position or front view, and K L, representing the width of moulding transferred to N J by the parallel lines K N and L J, will show the width of opening in the cutter. Having now the height and width, it only remains to project an indefinite number of points and trace the curve through them. Divide A B into a number of parts, and

to avoid confusion mark the points of division thus obtained upon A B—1, 2, 3, 4, &c. Divide K L in an exactly similar manner and into the same number of parts, and mark the divisions I., II., III., IV., &c. Erect perpendiculars from points 1, 2, 3, 4, &c., meeting the curve A E B, and from the points thus found on A E B draw horizontal lines to F C; from the termini of these horizontals on F C draw the remaining lines parallel to and between G H and C J. From the divisions I., II., III., IV., &c., on K L, let drop the perpendiculars, cutting the other series of lines at right angles. A point of the curve will then be at the intersection of the line from 1 on A B, with line I. on K L; another at the intersection of the line originating at 2 with that from II., and so on, and the

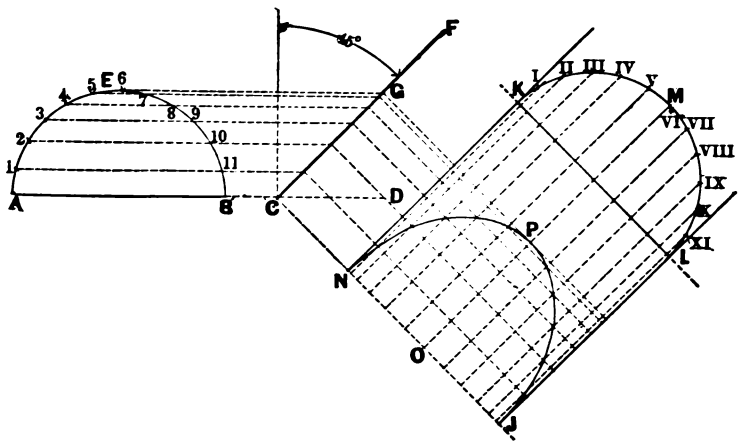

Fig. 2188.

proper curve is found by tracing from N through the intersections to P, and from P to J. Then K N being one side of the cutter and L J the other, N P J is the curve that the opening or cutting edges must have to cut the profile A E B, with the cutter set at F C, or 30°.

The same method is shown in Fig. 2188, except that in this case, instead of dividing A B and K L, the divisions are made directly on the peripheries A 6 B and K VI. L by stepping round with the dividers. The cutter F C is shown in this case at an angle of 45°, in order that the change in form which the curve assumes with the cutter at different angles may be clearly seen by comparing the curve N P J of Fig. 2187 with the same in Fig. 2188. The two figures are similar in other respects, and as the lettering

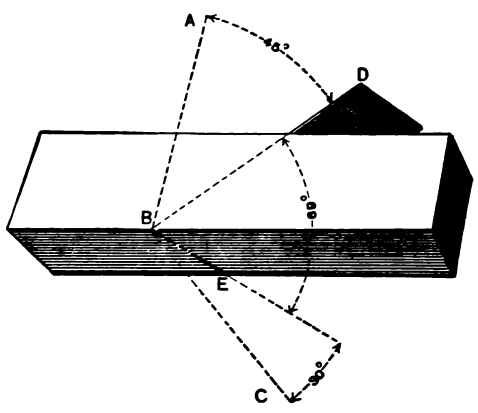

Fig. 2189.

is the same on each, the description of Fig. 2187 will apply equally to Fig. 2188.

There remains one more case of cutters moving in right lines, and that is where, besides having an inclination backward, as at F C, Fig. 2187, making a vertical angle to the line of motion, they are placed at an angle across the guiding piece also, or "skewing," thus making an angle to the line of motion on a horizontal plane as well as on a vertical one. Thus, suppose an ordinary carpenter's plane to have the cutter or "iron" turned partly round and placed so that the cutting edge, instead of lying at a right angle across the body, crosses it at some other angle. Fig. 2189 represents an ordinary carpenter's plane with the blade so placed. Here the edge, or rather side, D B, of the blade inclines back at an angle, as A B D, which is 45° in this case, to the perpendicular line A B on the side of the plane. For convenience call A B D the vertical angle. The lower or cutting edge E B of the blade also crosses the bottom of the plane at an angle E B C—30° in this instance—to a line B C, crossing the bottom at right angles. Now, it is evident that this latter angle E B C will influence the form of the cutter, if, instead of being a flat plane, as represented for clearness in Fig. 2189, it had a cutting edge of curved outline for cutting mouldings or similar work. But in either case the angle that D B or one side of the blade makes to E B, or the cutting edge—that is, the angle D B E—must be found in order to cut off the blank for the cutter or knife at the right "slant."

The method given in Figs. 2187 and 2188 of determining the form of cutter to produce a moulding of given profile now undergoes a modification where there are two angles to be taken into consideration instead of one. As an example, suppose a cutter is required that is to be fixed in such a position in its carrier or block that the handle A B D, or "vertical angle," of Fig. 2189 is, say, 45°, and the angle E B C, or "horizontal angle," of Fig. 2189 shall be 30°. Required the angle at which the bottom of the blank for the cutter must be cut off; or the angle that the side D B and lower edge B E of Fig. 2189 would make to each other, measured on the face of the cutter, and required the outline of cutting edge to be traced on the face of cutter to cut the section of moulding A E B, Fig. 2190: draw a horizontal line, as A B C D, and erect a perpendicular, as C R. From C draw C F,

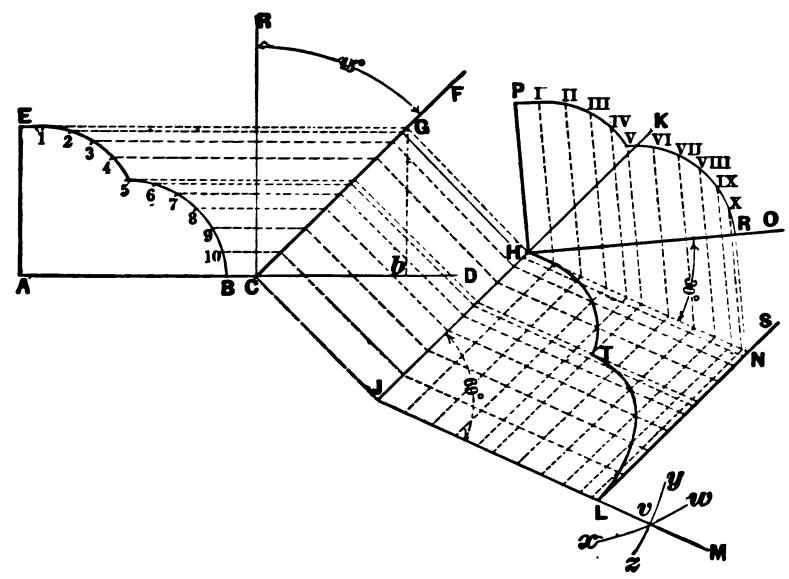

Fig. 2190.

making an angle to C R equal to the "vertical angle," or angle A B D, Fig. 2189, which is 45° in this case. Draw a profile of the required moulding, as A E B, with its back A B coincident to the horizontal line A B C D. Draw a horizontal line from the highest point of the profile, as E, to meet F C in G. Draw parallel lines C J and G H, from C and G respectively, of any convenient length and making right angles to F C. At right angles to G H and C J, and parallel to F C, draw K H J to represent one side or edge of the cutter, but the angle of the lower end or angle D B E of Fig. 2189 must now be determined; to do this, draw an indefinite horizontal line, A B C, Fig. 2191, and from any point, as B, drop a perpendicular B D; now, from B set off on A B C the distance C *b* of Fig. 2190, obtaining point E, and from E extend a perpendicular above and below A B C, as F E H. From E on E F set off distance G *b* of Fig. 2190, obtaining J on E F. From B draw a line, making the same angle to B D that the angle E B C is in Fig. 2189, or 30° in this case, and cutting E H in K. Set off distance E K from E on A C, obtaining L; draw L J. Now, on Fig. 2190, with centre at H, and radius L J of Fig. 2191, describe arc *w x*, and from J as centre, on Fig. 2190, and B K of Fig. 2191 as radius, describe arc *y z*. Through the intersection *v* of arcs *y z* and *w x*, J L M must be drawn, making the proper angle to the side J H K of the cutter; this angle is 69° in this case, as found by construction. From H draw H N parallel to J L, and from H draw H O at the same angle to H N that B K is to B D.

Fig. 2191, or angle E B C, Fig. 2189. Place a duplicate of A E B, with its base coincident to H O and corner A at H, as H P R. From R draw R N at right angles to H R and cutting H N at N; through N draw S N L parallel to K H J. Then while K H J represents one edge of the cutter, S N L will be the other, and J L the cutting edge before the opening is cut out. Divide the curves

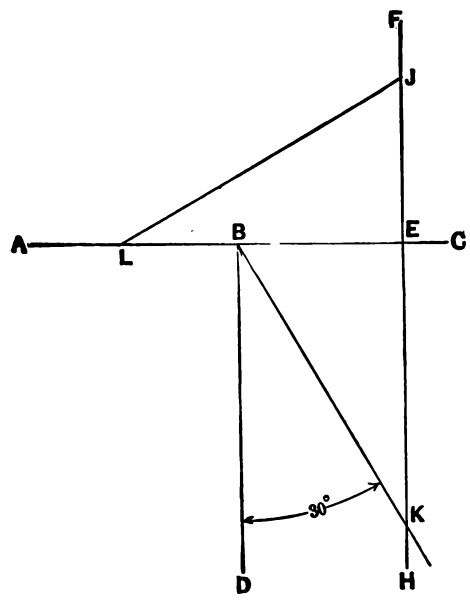

Fig. 2191.

E B and P R similarly, obtaining points 1, 2, 3, &c., and I., II., III., &c., respectively. From points 1, 2, 3, &c., lines are to be drawn parallel to E G, meeting G C, continued from G C parallel to G H, and meeting H J, and from H J parallel to H N, meeting N L. From points I., II., III., &c., lines are to be drawn perpendicular to H R, meeting H N and continued from H N, parallel to H J, to J L, thus intersecting the first series. Lines from points 1, 2, 3, &c., then determine the height of different points of the curve, and those from I., II., III., &c., their location laterally; hence, by tracing through the intersections of 1 with I., 2 with II., &c., the curve H T L is obtained. The two outside lines K H J and S N L may now represent the edges of a piece of steel of which the cutter is to be made, and H T L will be the contour of cutting edge that must be given it in order that when, fixed for use at the angles named, it will form the required moulding A E B.

If the chisel, knife, or cutter revolves in a circle, instead of in a right or straight line, the problem is again different, and the shape of cutting edge necessary to produce a given shape of moulding is again altered. Let Fig. 2192, for example, represent the bar or head of a wood moulding machine, the bar or head revolving in the direction of the arrow, and the moulding being moved beneath it in a straight line endways as denoted by the arrow at N.

In order that the nut that holds the cutter to the head may clear the top of the moulding the highest cutting point of the cutter must not come nearer to the corner of the head than ¼ inch. This is shown in the end view of a 2½ inch cutter head in Fig. 2193, the circle B representing the path of revolution of the nut. In larger heads the nut will clear better.

Now we may consider that the cutter simply revolves about a circle whose diameter is the largest that can be described on the end of the square bar that drives it.

If, for instance, we look at the end of the bar as it is presented in Fig. 2195, we see that the circle just fills the square, and that if we cut off all four corners, leaving the bar round, as denoted by the circle, the chisel will revolve in the same path as before. Now suppose we place beneath the revolving chisel a piece of square timber, and raise this timber while holding it horizontally, as would be done by raising the work table. It will cut the work to the shape shown in the two views in the figure, enabling us to observe the important point that the only part of the work that the chisel has cut to its finished shape is that which lies on the line A A. This line passes through the axis on which the bar and cutter revolve, and represents the line of motion of the work in feeding upward to the chisel.

If now we were to move the work endways upon the table, we should simply cause the moulding to be finished to shape as it passes the line A; because all the cutting is done before and up to the time that the chisel edge reaches this line; or in other words, each part of the chisel edge begins to cut as soon as it meets the moulding, and ceases to cut as soon as it reaches this line. We may now draw this circle and put on it a chisel in two positions, one at the time its lowest cutting point is crossing the line A and the other at the time the highest point on its cutting

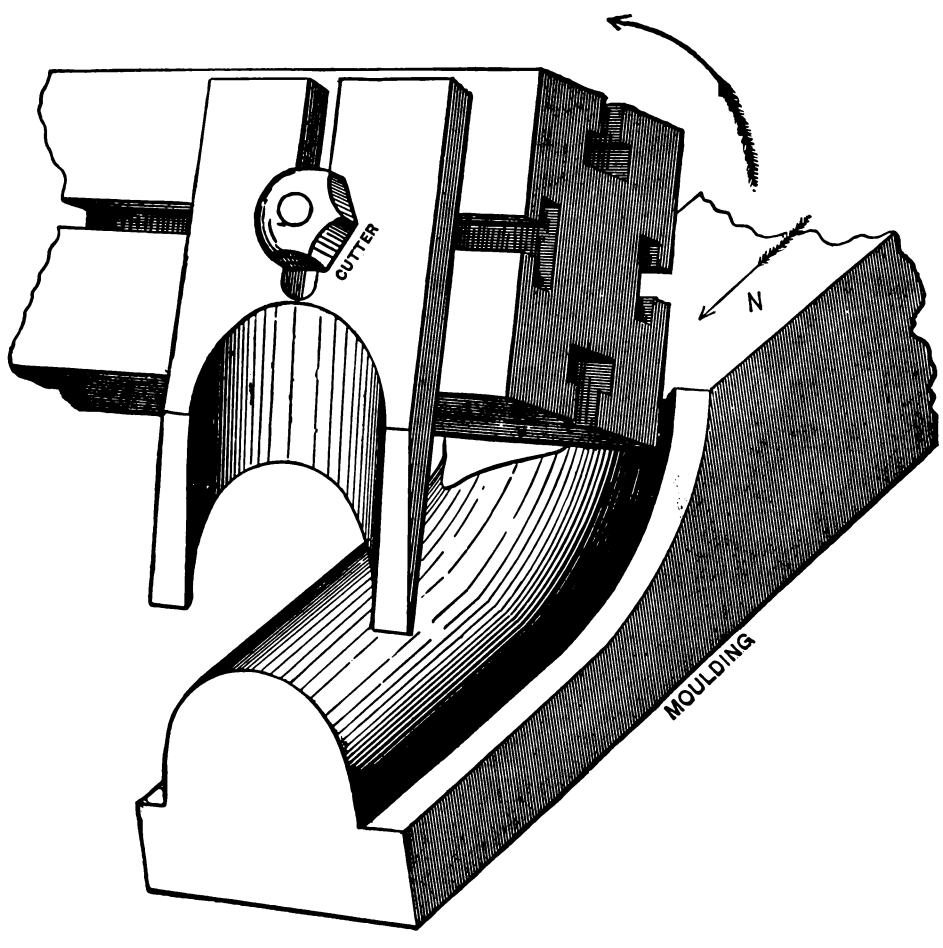

Fig. 2192.

edge is passing the line, these positions being marked 1 and 2 in Fig. 2196; the depth of moulding to be cut being shown at S. Now, since the chisel revolves on the centre of the circle, the path will be that of the circle D, while the depth of moulding it will cut is the distance between C and E, measured along the line A A, this depth corresponding to depth shown at S.

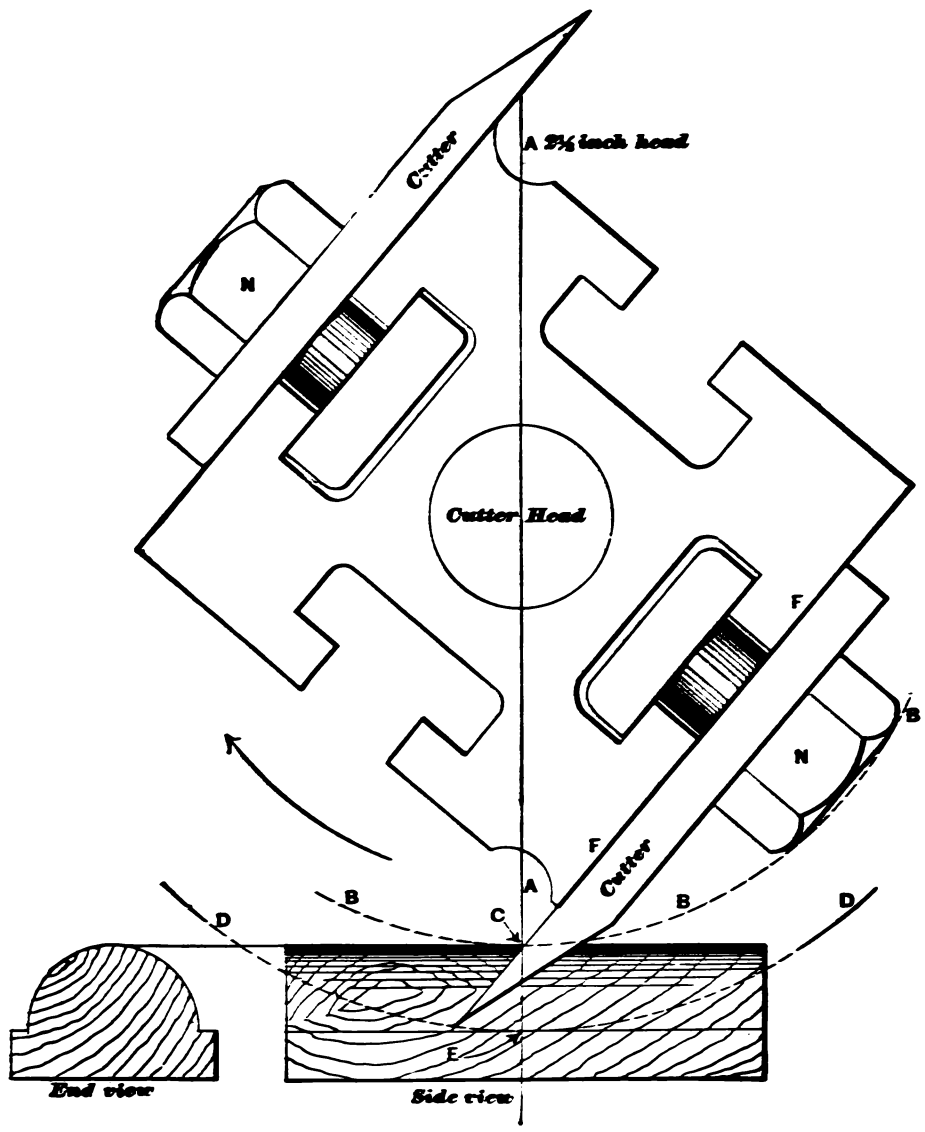

Fig. 2193.

of motion on its highest cutting point C will be as shown by the

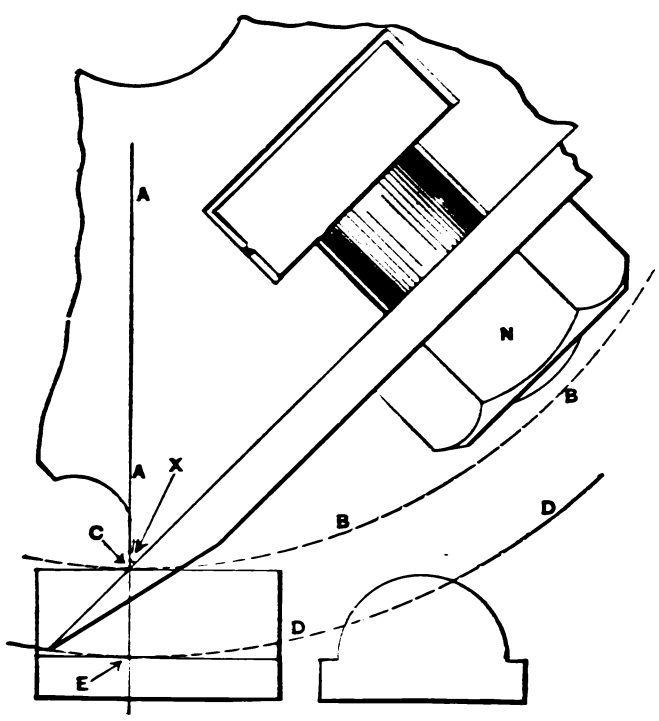

Fig. 2194.

circle B, and that of the lowest point or end E of its cutting edge

Clearly when the chisel has arrived at position 2, the moulding will be finished to shape, and it is therefore plain that it takes a length of cutter-edge from C to F to cut a moulding whose depth is S, or what is the same thing, C E.

But to solve the question in this way, we require for every different depth of moulding to make such a sketch, and the square bar that drives the chisel is made in various sizes, each different size again altering the length or depth of chisel edge necessary for a given depth of moulding.

But we may carry the solution forward to the greatest simplicity for each size of square bar, and for any depth of moulding that can be dressed on that size of bar, by the following means:—In Fig. 2197 we have the circle and the line A as before; the depth from C to E being the greatest depth of moulding to which the square bar is intended to drive the chisels; while point C is the nearest point to the square bar at which the top of the moulding must be placed. Line *a* represents a chisel cutting at its highest point; line *b* a chisel cutting the moulding to final shape at ¼ inch below C, on the line A; line *c* a chisel cutting the moulding to final shape at a distance of ½ inch below point C and measured on the line A; lines *d*, *e*, *f*, *g*, *h*, and *i* represent similar chisel positions, the last meeting the point E, which is the lowest point at which the chisel will cut. Suppose, now, we set a pair of compasses one point at the centre A of the circle, and strike the arc *j*; this arc will represent the path of motion of that part of the chisel edge that would finish the moulding to shape at C; similarly arc *k* represents the path of motion of that part of the chisel edge

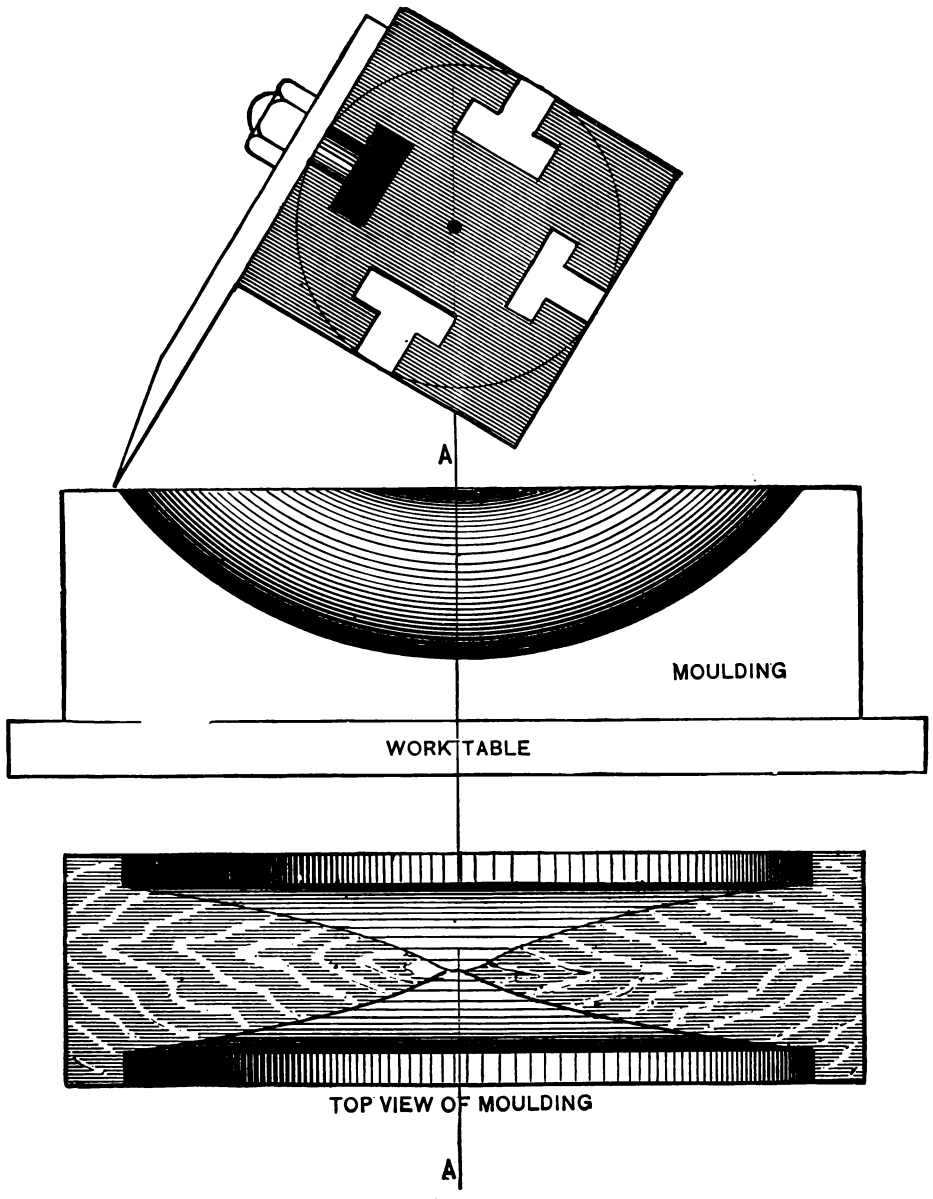

Fig. 2195

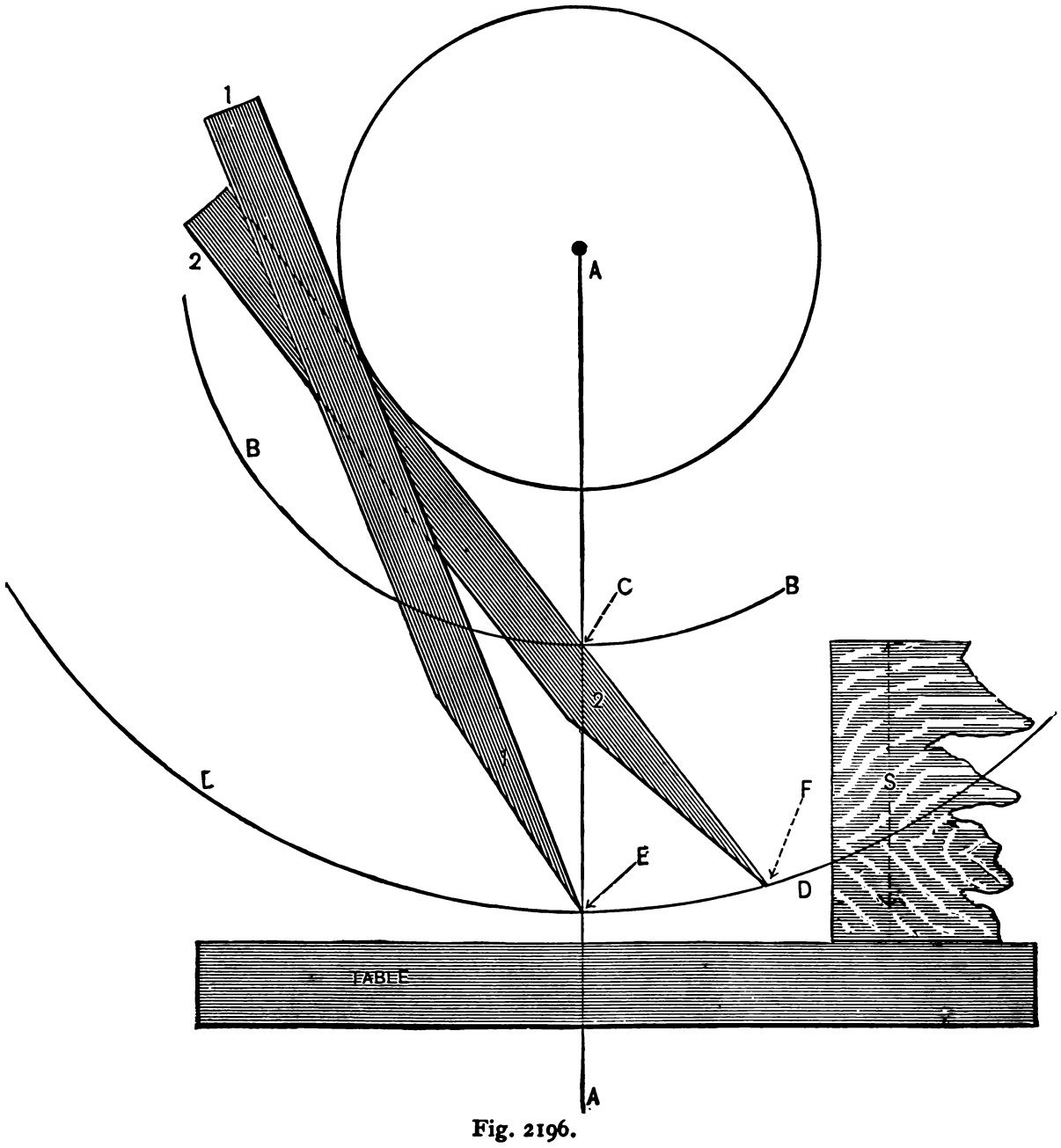

Fig. 2196.

that cuts the moulding to final shape on the line A, and at a distance of $\frac{1}{4}$ inch below C, and so on until we come to arc *r*, which represents the path of motion of the end of the chisel. All these arcs are carried to meet the first chisel position C *a*, and from these points of intersection with this line C *a* we mark lines representing those on a common measuring rule. The first of these from C we mark $\frac{1}{4}$, the next $\frac{1}{2}$, the next $\frac{3}{4}$, and so on to 2, these denoting the measurement or depth of chisel necessary to cut the corresponding depth of moulding. If, for example, we are asked to set a pair of compasses to the depth of cutting edge necessary to cut a moulding that is an inch deep, all we do is to set one leg of the compasses at C, and the other at line 1 on the line C *a*; or if the moulding is to be 2 inches deep, we set the compasses from C to 2 on line C *a*. We have here, in fact, constructed a graduated scale that is destined to be found among the tools of every workman who forms moulding cutters, and if we examine it we shall find that the line that is marked $\frac{1}{4}$ inch from C is not $\frac{1}{4}$ inch but about $\frac{5}{16}$ inch; its distance from C being the depth of chisel edge necessary to cut a moulding that is $\frac{1}{4}$ inch deep.

Again, the line marked 1 measures $1\frac{3}{16}$ inch from C, because it requires a chisel edge $1\frac{3}{16}$ deep to cut a moulding that is one inch deep. But if we measure from *c* to the line marked 2 we find that it is $2\frac{1}{4}$ inches from C, and since it represents a chisel that will cut a moulding two inches deep, we observe that the deeper the moulding is the nearer the depth of cutting edge is to the depth of moulding it will produce. This occurs because the longer the chisel the more nearly it stands parallel to the line A, at the time when its point is crossing the line A. Thus, line *i* is more nearly parallel to A than line *a* is, and our scale has taken this into account, for it has no two lines equally spaced; thus, while that marked $\frac{1}{4}$ is $\frac{5}{16}$ inch distant from C, that marked $\frac{1}{2}$ is less than $\frac{5}{16}$ inch distant from that marked $\frac{1}{4}$, and this continues so that the line marked 2 is but very little more than $\frac{1}{4}$ inch from that marked $1\frac{3}{4}$. Having constructed such a scale we may rub out the circle, the arcs, the line A, and all the lines except the line from C to *a* and its graduations, and we have a permanent scale for any kind of moulding that can be brought to us.

If, for example, the moulding has the four steps or members *s*, *t*, *u*, *v*, in the figure, each $\frac{1}{2}$ inch deep, then we get the depth of cutter edge for the first member *s* on our scale, by measuring from *c* to the line $\frac{1}{2}$ on line C *a*. Now the next member *t* extends from $\frac{1}{2}$ to 1 on the moulding, and we get length of cutter edge necessary to produce it from $\frac{1}{2}$ to 1 on the scale. Member *u* on the moulding extends from 1 to $1\frac{3}{4}$; that is to say, its highest point is 1 inch and its lowest $1\frac{3}{4}$ inch from the top of the moulding, and we get the length for this member on a scale from the 1 to the $1\frac{3}{4}$; and so on for any number of members.

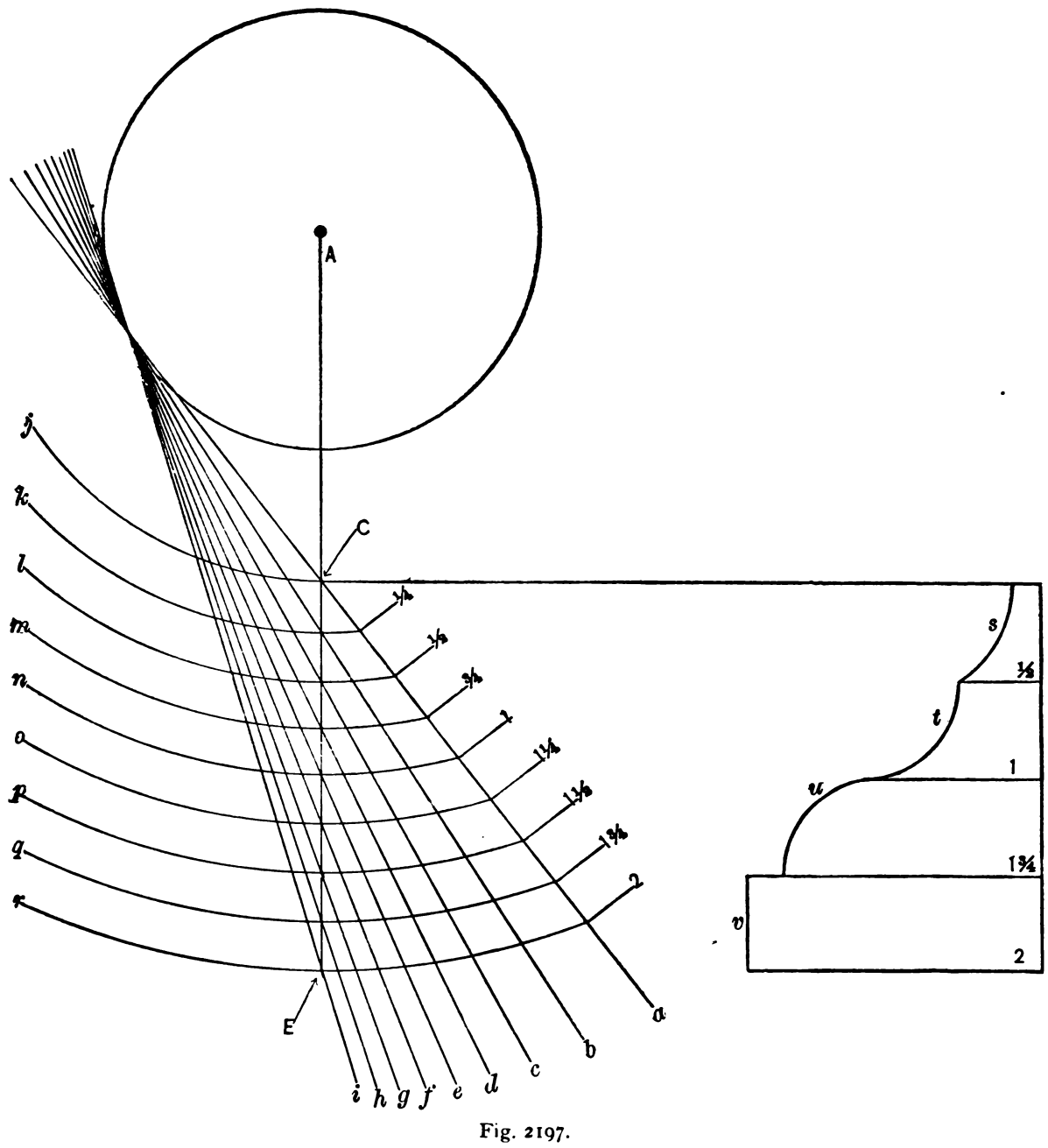

Fig. 2197.

After the depth of cutting edge for each member has thus been found, it remains to find the exact curve of cutting edge for each step, and, in doing this, the same scale may be used, saving much labor in this part also of the process, especially where a new piece of moulding must be inserted to repair part of an old piece that needs renewal in places only, as is often the case in railroad cars.

In Fig. 2197A we have a scale or rule constructed upon the fore-

going principles, but marked to sixteenths, and it may now be shown that the same scale may be used in finding the actual curve as well as the depth of cutter edge necessary to produce the moulding of any member of it. Let the lower curves *s*, *t*, for example, represent the moulding to be produced, and the upper

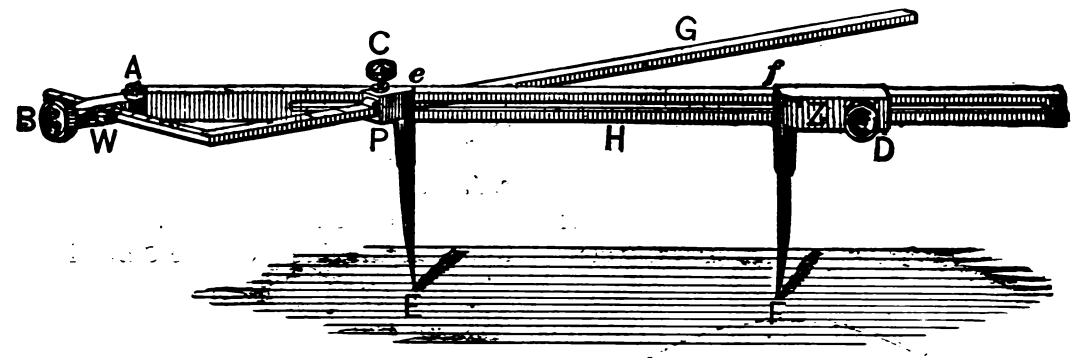

Fig. 2198.

outline represent the blank piece of steel of which the cutter is to be made, the edges C, D being placed in line one with the other. We may then draw across both the moulding and the steel, lines such as E E, F F, G G, H H, I I, J J, all these lines being parallel to the edges C, D. To get the total depth of cutter edge for the moulding we measure with a common measuring rule the

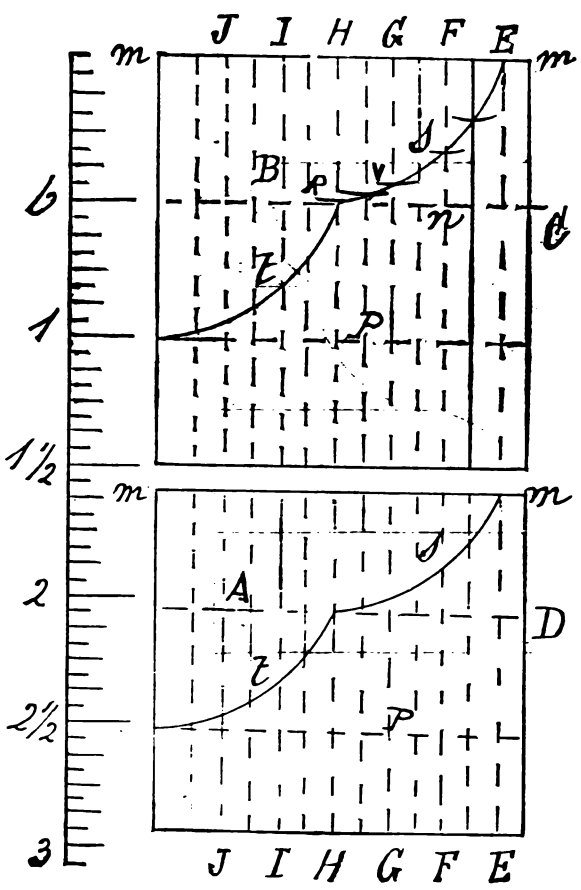

Fig. 2197A.

total height of the moulding, and supposing it to measure an inch, we set a pair of compasses to an inch on our cutter scale, and with them mark from the base *m* of the steel, the line P giving total depth of cutter edge. We next measure with a common rule the depth of member *s* of the moulding, and as it measures ½ inch we set the compasses to the ½ on the cutter

scale, and with these compasses mark from line *m* line B, showing the depth of member *s*. In order to find the exact curve for each member, we have first to find a number of points in the curve and then mark in the curve by hand, and it is for the purpose of finding these points that the lines E E, F F, G G, H H, I I, J J, have been drawn. These lines, it may be remembered, need not be equally spaced, but they must be parallel, and as many of them may be used as convenient, because the greater their number the more correctly the curve can be drawn.

The upper edge or base line, *m m*, both of the steel and of the drawing, is that from which all measurements are to be taken in

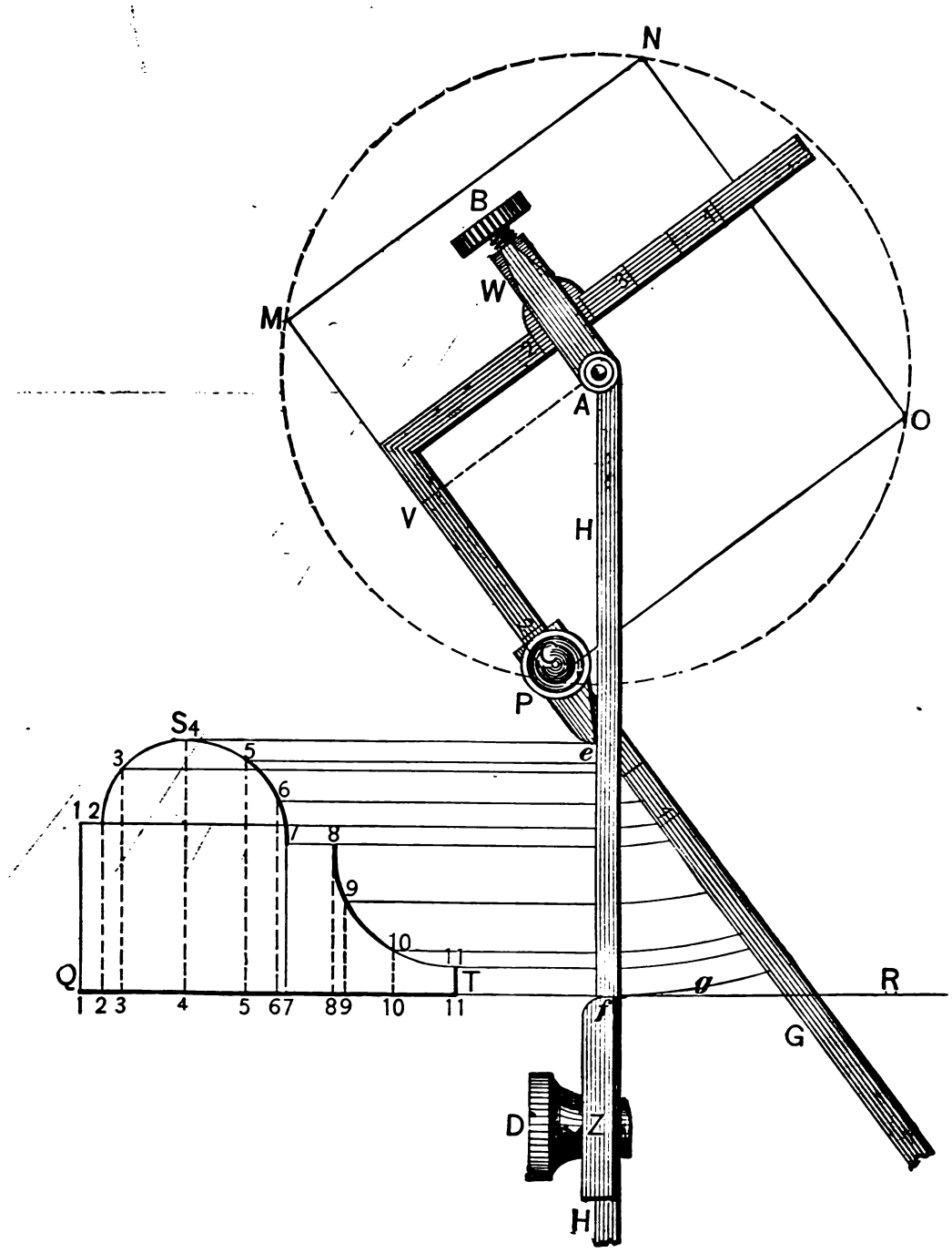

Fig. 2199.

finding the points in the curve, which is done as follows: With an ordinary measuring rule we measure on the moulding and from line *m m* of the moulding as a base the length of the line F F below *m m*, to the curve, which in this case measures say $\frac{5}{16}$ inch; we then set a pair of compasses or compass calipers to the $\frac{5}{16}$ on the cutter scale, and from base *m m* on the cutter

steel, mark, on line F F, an arc, and where the arc cuts F F is one point in the curve.

Similarly we measure on the moulding, or drawing of the moulding, the length of line G G from line *m m* to the moulding curve, and find that it measures, say $\frac{7}{16}$ inch, hence we mark from base line *m m* of the steel, on line G G, arc V, distant $\frac{7}{16}$ according to the cutter scale. Similar measurements are taken at each vertical line of the drawing which represents the moulding, and by means of the corresponding divisions of the cutter scale, arcs are marked on the vertical lines on the cutter steel, and where the arcs cut the vertical lines are points in the curve, and through these points the curve may be drawn by hand. We may make a cutter scale from an ordinary parallel rule, marking one end to correct inches and the other end for a cutter scale. Measurements from the moulding may then be made on one end of the rule; measurements for the cutter may be taken from the other end of the rule, and the rule may be used at the same time to draw

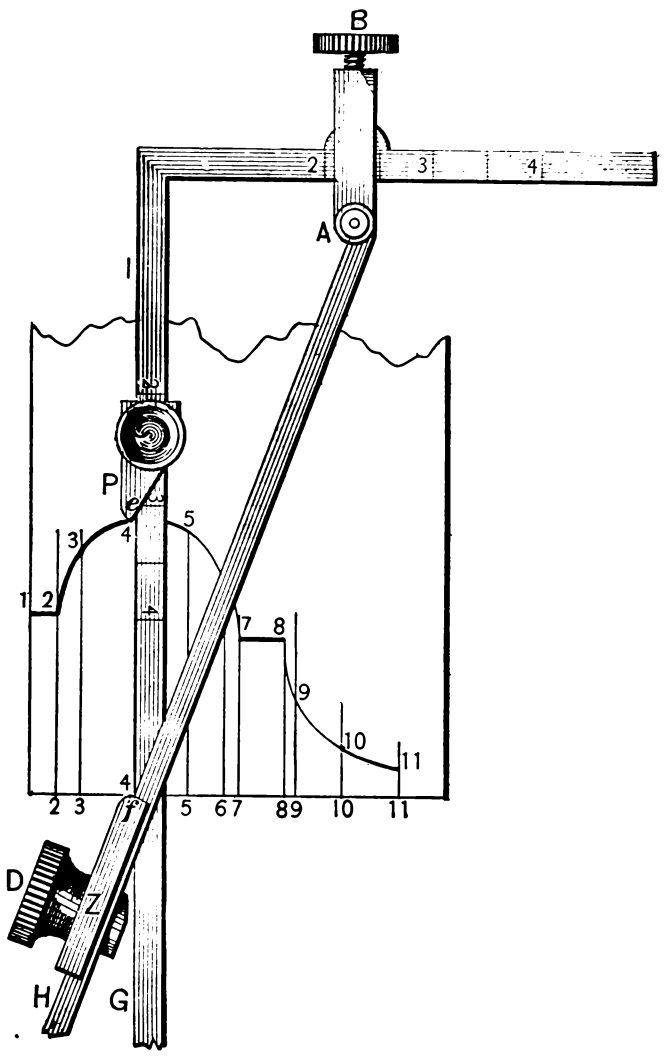

Fig. 2200.

the parallel lines E E, &c. Or, as each size of cutter head requires a different cutter scale, we may make a rule out of a piece of box or other close-grained wood, say $\frac{3}{4}$ inch square, using one side for each size of cutter head. One end of each face of this rule may be marked in correct inches and parts of an inch (the divisions being thirty-seconds of an inch), and the other end may be marked as a cutter scale, the divisions being found as described with reference to Fig. 2197.

An instrument, patented by R. Drummond, for finding the depth of cutting edge and also for finding the curves, is shown in Figs. 2198 and 2199. It consists essentially of a bar G bent at a right angle, thus making two arms. Upon one arm is a slide W (best seen in Fig. 2199) secured by a set-screw B, and having at A a pivot to carry a second bar H, which is slotted throughout its length to permit bar G to slide freely through it. Upon the other arm of G is a slide P secured by a set-screw C, and carrying a compass point E. The bar H carries an adjustable slide Z secured by a set-screw D and carrying the compass point F.

In using the instrument but three very simple operations are necessary. First, the two slides W and P are set to the numerals on the bar, which correspond to the size of the head on the moulding machine the cutter is to be used upon; thus in Fig. 2199 they are shown set to numeral 2, as they would be for a 2-inch cutter head. The instrument is next opened, its two bars occupying the position shown in Fig. 2199, and the two compass points are set to the height of the moulding or to any desired member of it, as the case may be. The bars are then opened out into the position shown in Fig. 2200, and the compass points at

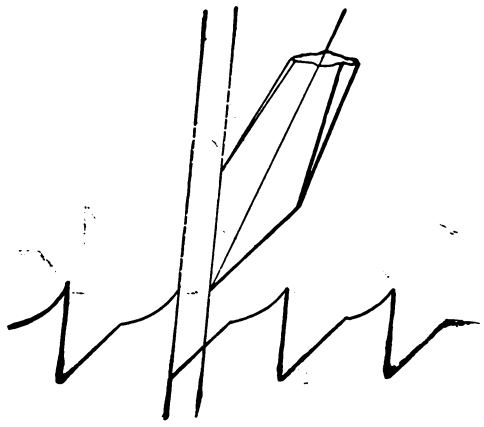

Fig. 2201.

once give the depth of cutter edge necessary to produce the required depth of moulding.

It will be noted that the pivot A represents the centre upon which the cutter revolves, and that while the face of the bar H corresponds to the line of moulding formation answering to line A A in Fig. 2196, the face of bar G corresponds to the face C F of the cutter in Fig. 2196; hence the instrument simply represents a skeleton head and cutter, having motions corresponding to those of an actual cutter head and cutter.

THE FILE.—The file is a piece of hardened steel having teeth produced upon its surface by means of rows of chisel cuts which run more or less diagonally across its width at an angle that is varied to suit the nature of the material the file is to be used upon. The vertical inclination of the tooth depends upon the inclination of the face of the chisel with which it is cut, the two

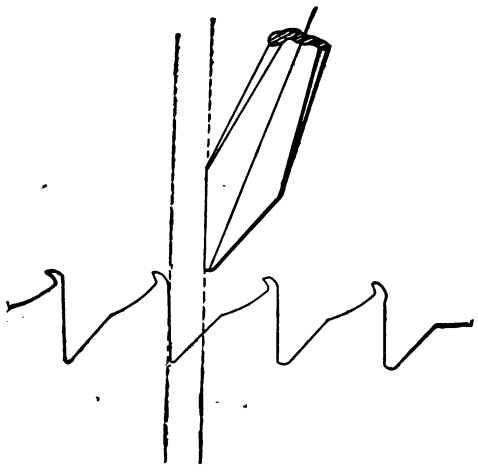

Fig. 2202.

being equal, as is shown in Fig. 2201, which is an enlarged view of a chisel and some file teeth. In order that the tops of the teeth shall be sharp, and not rounded or curved, as in Fig. 2202, it is necessary that the edge of the chisel be kept sharp, an end that is greatly aided by the improved form of chisel shown in Fig. 2203. When a file possesses curved points, or caps, as they are technically termed, a few strokes upon a narrow surface will cause them to break off, reducing the depth of the teeth and causing the cuttings to clog in them. If, however, the file is used upon a broad surface these caps will remain, obviously impairing the cutting qualifications of the file, even when new, and as they

soon get dulled the file loses its grip upon the work and becomes comparatively valueless.

Files were, until the past few years, cut entirely by hand—file cutting by machinery having previously been a wide field of mechanical experiment and failure. Among the most prominent causes of failure was that the teeth produced by the earlier machines were cut too regular, both as to their spacing and their height; hence the points of the rear teeth fell into the same

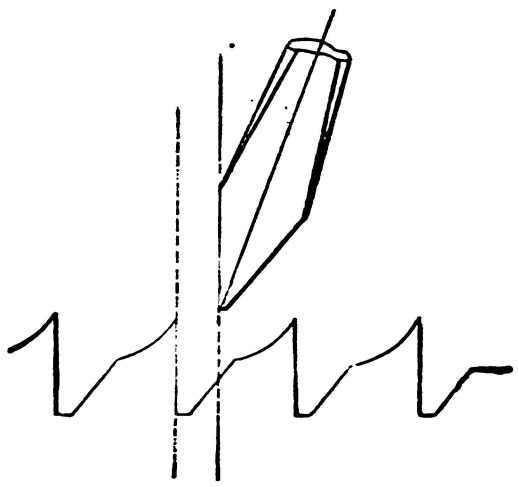

Fig. 2203.

channels as those in advance of them, thus giving the tooth points too little opportunity to grip the work. This also gives too broad a length of cutting edge and causes the file to vibrate on the forward or cutting stroke, an action that is technically known as chattering, and that obviously impairs its cutting capacity. The greatest amount of duty is obtained from a file when the rear tooth cuts off the projection left by the preceding one, because in that case the duty of the tooth is confined to cutting off a projection that is already weakened and partly separated from the main body by having the metal cut away around its base. Workmen always practically recognise this fact, and cause the file marks to cross each other after every few strokes. In the machine-cut files made by The Nicholson File Co., the teeth are arranged to attain this object by the following means:—1. The rows of teeth are spaced progressively wider apart from the point towards the middle of the file length by regular increments of spacing, and progressively narrower from the middle toward the heel. 2. This general law of the spacing is modified by introducing as the teeth are cut an element of controllable irregularity in the spacing, which irregularity is confined within certain limits, so that neither the increment nor decrement of spacing is entirely regular. 3. In arranging the teeth so that the successive rows shall not be exactly parallel one to the other, the angle of inclination being reversed as necessity requires. The irregularity of spacing, while sufficient to accomplish the intended object, is not enough to practically vary the cut of the file, or, in other words, it is insufficient to vary its degree of coarseness or fineness to any observable extent. But it enables the file to grip the work with as little pressure as possible, and enables the teeth to cut easily without producing deep file marks or furrows.

Files and rasps have three distinguishing features: 1. Their length, which is always measured exclusively of their tangs. 2. Their cut, which relates not only to the character, but also to the relative degree of coarseness of the teeth. 3. Their kind or name, which has reference to the shape or style. In general, the length of files bears no fixed proportion to either their width or thickness, even though of the same kind. The tang is the spiked-shaped portion of the file prepared for the reception of a handle, and in size and shape should always be proportioned to the size of the file and to the work to be performed. The heel is that part of the file to which the tang is affixed.

Of the cut of files we may say that it consists of three distinct forms; viz.: "single cut," "double cut" and "rasp," which have different degrees of coarseness, designated by terms as follows viz.:—

Single-cut.	Double-cut.	Rasp.
Rough	Coarse	Coarse
Coarse	Bastard	Bastard
Bastard	Second-cut	Second-cut
Second-cut	Smooth	Smooth
Smooth	Dead-smooth	

The terms "rough," "coarse," "bastard," "second-cut," "smooth" and "dead-smooth," have reference only to the coarseness of the teeth, while the terms "single-cut," "double-cut" and "rasp" have special reference to the character of the teeth. The single-cut files (the coarser grades of which are sometimes called "floats") are those in which the teeth are unbroken, the blanks having had a single course of chisel-cuts across their surface, arranged parallel to each other, but with a horizontal obliquity to the central line, varying from 5° to 20° in different files, according to requirements. Its several gradations of coarseness are designated by the terms "rough," "coarse," "bastard," "second-cut" and "smooth." The rough and coarse are adapted to files used upon soft metals, as lead, pewter, &c., and, to some extent, upon wood. The bastard and second-cut are applied principally upon files used to sharpen the thin edges of saw teeth, which from their nature are very destructive to the delicate points of double-cut files. The smooth is seldom applied upon other than the round files and the backs of the half-rounds. Fig. 2204 represents the cut of single-cut rough files, their lengths ranging from 16 inches down to 4 inches. Fig. 2205 shows the cut of the coarse, bastard, and second-cut, whose lengths also range from 16 to 4 inches, and whose cut is also finer as the length decreases. The float is used to some extent upon bone, horn, and ivory, but principally by plumbers and workers in lead, pewter, and similar soft metals. It will be seen that the teeth are nearly straight across the file and are very open, both of these features being essential requirements for files to be used on the above-named metals.

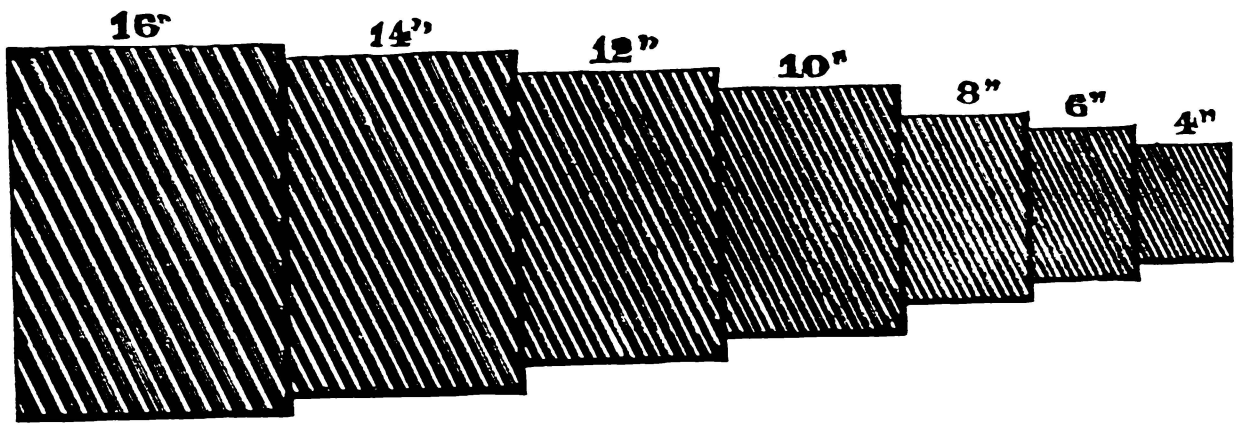

Fig. 2204.

Double-cut files are those having two courses of chisel cuts crossing each other. The first course is called the over cut, and has a horizontal obliquity with the central line of the file, ranging from 35° to 55°. The second course, which crosses the first, and in most double cuts is finer, is called the up-cut, and has a horizontal obliquity varying from 5° to 15°. These two courses fill the surface of the file with teeth inclined toward its point, the points of which resemble somewhat, when magnified, those of the diamond-shaped cutting tools in general use. This form of cut

is made in several gradations of coarseness, which are designated by the terms "coarse," "bastard," "second-cut," "smooth" and "dead-smooth." Fig. 2206 represents the cut of double-cut called from their being made by M. Groubet, of Switzerland. These files are double-cut, and their degree of coarseness is denoted by number; thus, the coarsest is a bastard and the

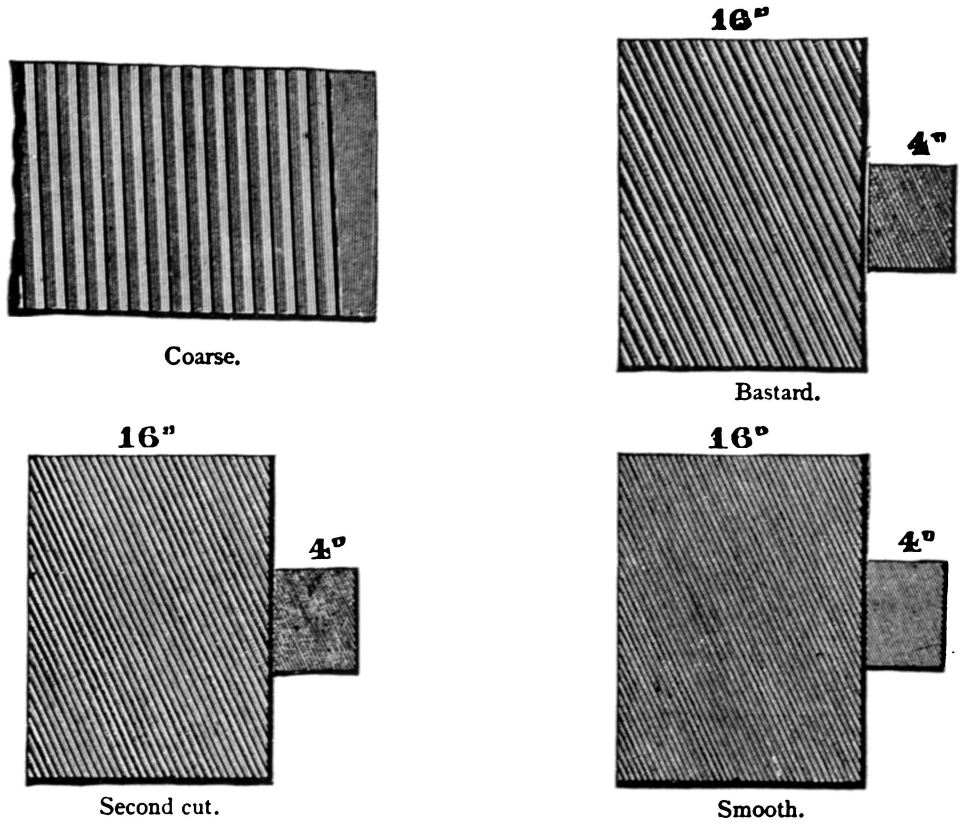

Fig. 2205.

bastard files, from the 16 inch down to the 4 inch, and Fig. 2207 the cut of the coarse, second-cut, and smooth. For very fine finishing a still finer cut, called the dead-smooth, is made, being finest number 8. The prominent characteristics of these files are their exceedingly even curvature and straightness, and, in the finer grades, the unusual fineness of the cut, which feels soft and

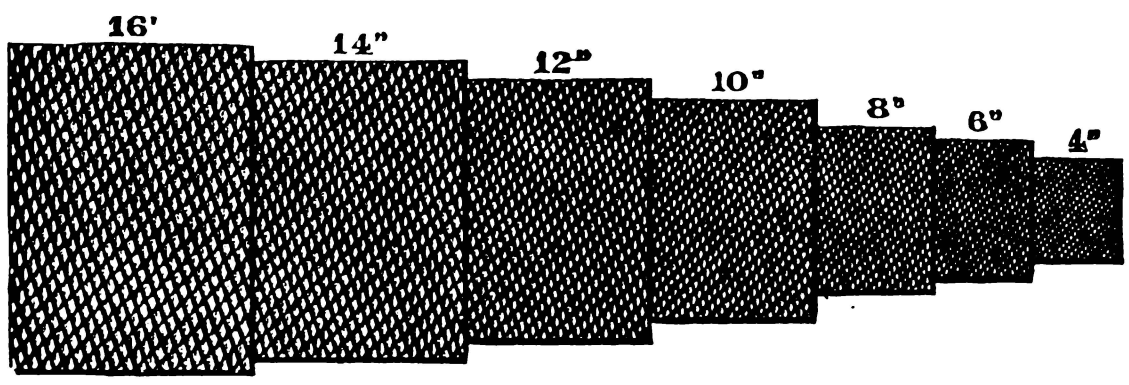

Fig. 2206.

like the smooth, but considerably finer. It is a superior file for finishing work in the lathe, or for draw-filing machine work that is to be highly finished. The double-cut is applied to most of velvety to the touch. They are made in sizes ranging from 2 to 10 inches, and are always double-cut.

Rasps differ from the single or double-cut files in that the

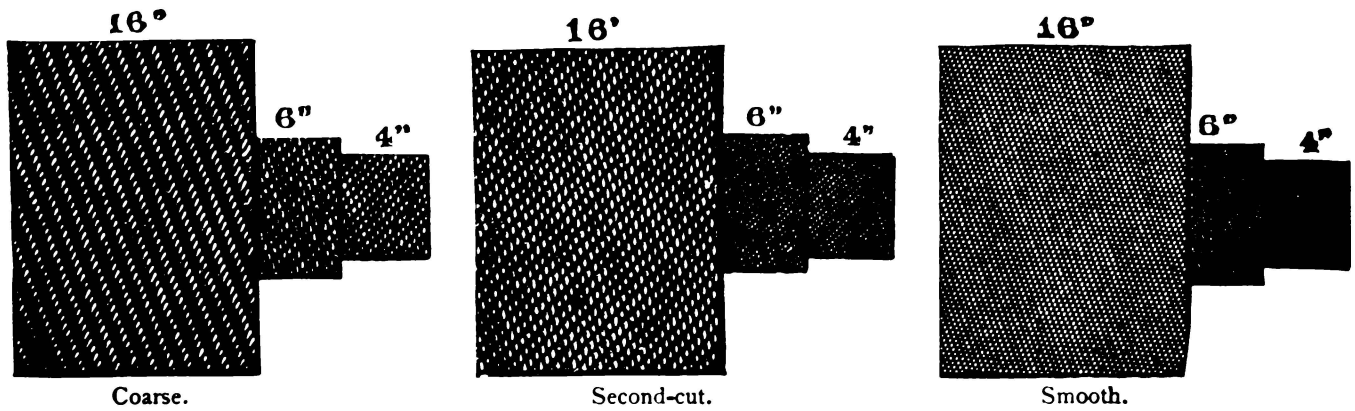

Fig. 2207.

the files used by the machinist, and, in fact, to most of the larger number in general use. For unusually fine work, tool-makers and watch-makers use the Swiss or Groubet files—so teeth are disconnected from each other, each tooth being made by a single-pointed tool, denominated by file-makers a punch, the essential requirement being that the teeth thus formed shall be so

irregularly intermingled as to produce, when put in use, the smoothest possible work consistent with the number of teeth contained in the surface of the rasp. Rasps, like files, have different degrees of coarseness, designated as "coarse," "bastard," "second-cut" and "smooth." The character and general coarseness of these cuts, as found in the different sizes, are shown in Figs. 2208 and 2209. Generally speaking, the coarse teeth are applied to rasps used by horseshoers, the bastard to those used by carriage makers and wheelwrights, the second-cut to shoe-rasps, and the smooth to the rasps used by cabinet-makers.

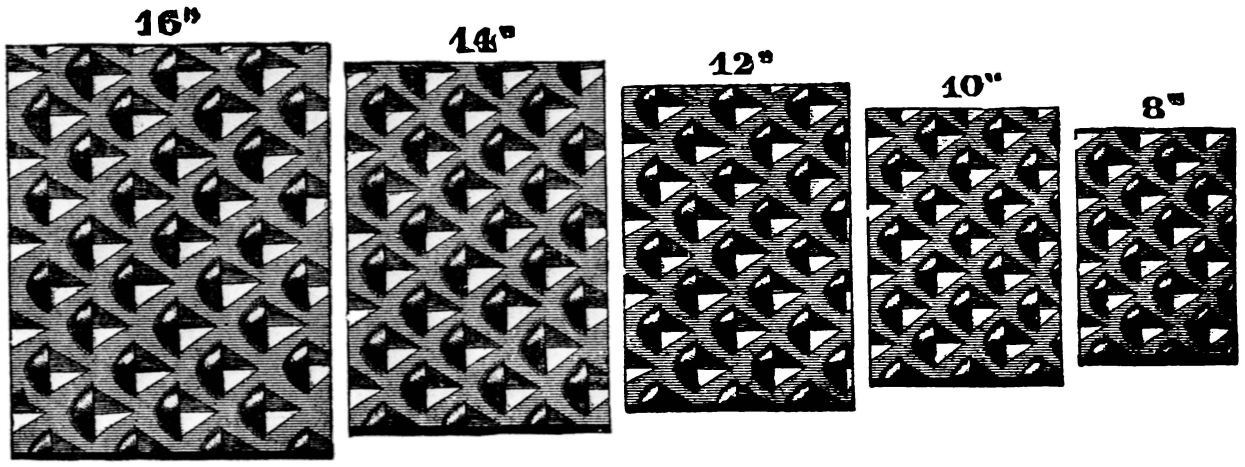

Fig. 2208.

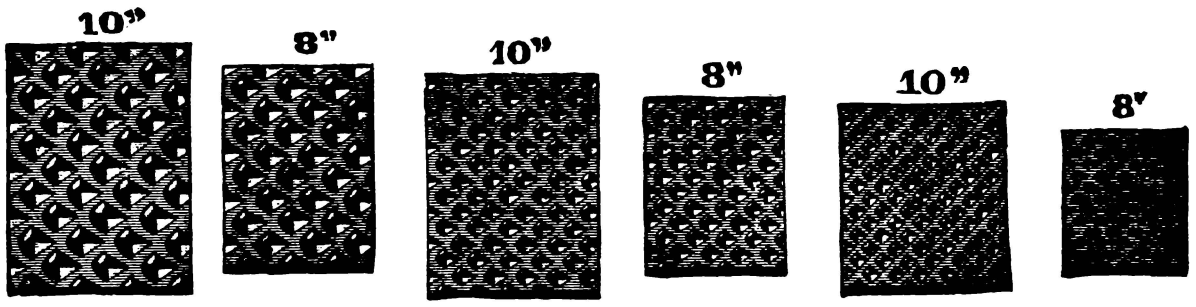

Bastard. Second-cut. Smooth.

Fig. 2209.

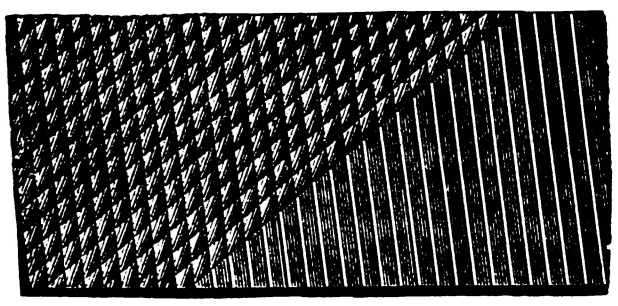

Fig. 2210.

Figs. 2211, 2212 and 2213 are respectively coarse, bastard, and finishing second-cut files, the first two being for brass.

Fig. 2210 represents a file open in both its over and up-cut,

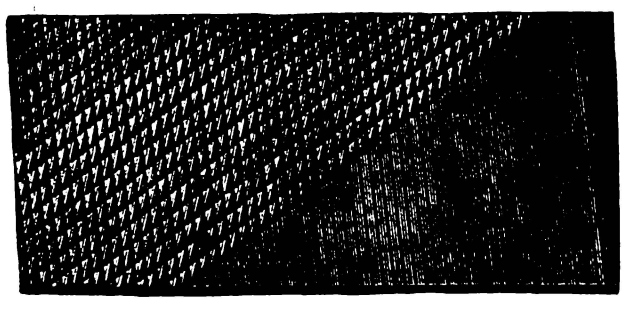

Fig. 2211.

which is not, therefore, expected to file fine, but fast, and is adapted for very rough work on the softer metals, as in filing off sprues from brass and bronze castings, filing the ends of rods, and work of a similar nature. It is also, to some extent, used upon wood. The essential difference between the bastard file shown in Fig. 2211 and that just described is the degree of fineness of the up-cut, which is nearly straight across the tool. This form of teeth, which may be applied to any of the finer cuts, and upon any of the shapes usually made double-cut, is especially adapted to finishing brass, bronze, copper and similar soft metals, and is not so well adapted to the rougher work upon these metals as the coarse brass file previously described. Fig. 2212 is a finishing file. The first or over-cut in this case is very fine, and, contrary to the general rule, has the least obliquity, while the up-cut has an unusual obliquity, and is the coarser of the two cuts. The advantages in this arrangement of the teeth are that the file will finish finer, and by freeing itself from the filings is less liable to clog or pin than files cut for general use. This form of cut is especially useful when a considerable quantity of finishing of a light nature is required upon steel or iron. It is not recommended

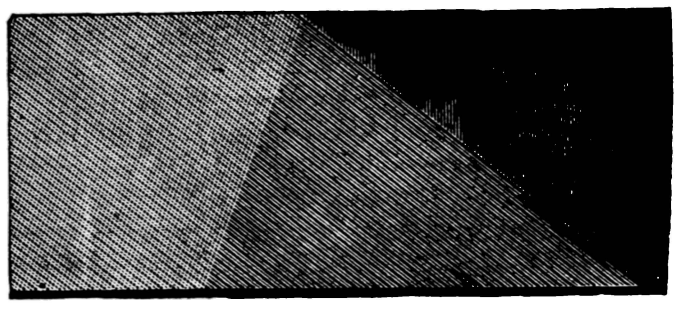

Fig. 2212.

for brass or the softer metals, nor should it be made of a coarser grade than the second-cut.

The names of files are sometimes derived from the purpose for which they are to be used. Thus, we have saw files, slitting files, warding files, and cotter files. The term "warding" implies that the file is suitable for use on the wards of keys, while "cotter" implies that it is suitable for filing the slots for that class of key which the machinist terms a cotter. In other cases files are named from their sections, as in the case of "square," "round," "half-round," and "triangular," or "three-square" files, as they are often termed.

The term "flat" may be considered strictly as meaning any

file of rectangular section whose width exceeds the thickness. Hence, "mill files," "hand files," and "pillar files" all come under the head of flat files, although each has its own distinguishing features. The general form of the flat file is shown in Fig. 2213, while the cross-sections of various quadrangular files are shown in Figs. from 2214 to 2218. From these views it will be seen that the thicknesses gradually increase from the mill to the square file. Mill files are slightly tapered from the middle to the point both in their width and thickness. They are single-cut, and are usually either bastard or second-cut, although they are sometimes double-cut. Mill files of both cuts are principally used for sharpening mill saws, mowing-machine knives and ploughs, and in some machine shops for rough lathe work, and, to some extent, in finishing composition brasswork. Mill sections are occasionally made blunt—that is to say, their sectional shape is alike from end to end—in which case they are mostly double-cut, and seldom less than 8 inches in length. They are suitable for filing out keyways, mortises, &c., and for these purposes should have at least one safe edge. A safe edge is one having no teeth upon it, which allows the file to be used in a corner without cutting more than one of the work surfaces. When the corner requires to be very sharp it is preferable to take a file that has teeth upon its edge and grind the teeth off, so as to bring the corner of the file up sharp, which it will not be from the cutting, because the teeth do not come fully up to a sharp corner.

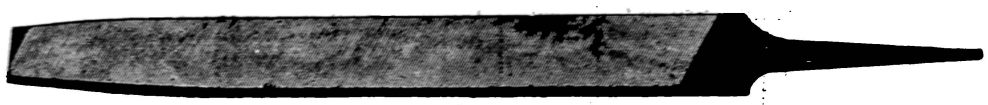

Fig. 2213.

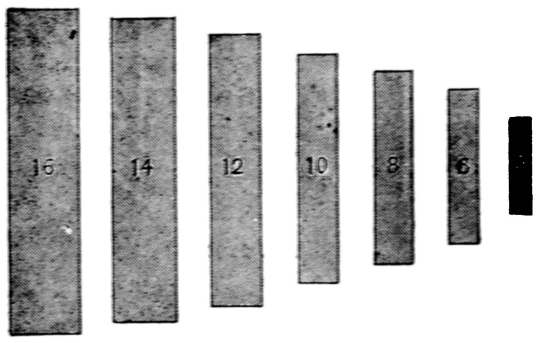

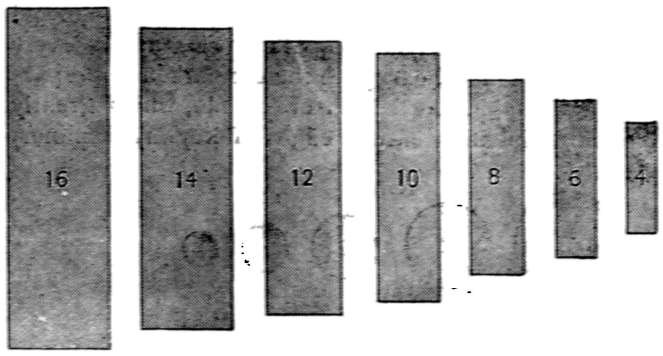

Fig. 2214.

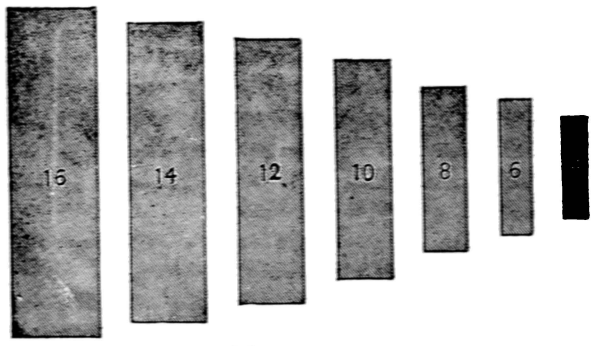

Fig. 2215.

Hand-files are tapered in thickness from their middle towards both the point and the tang, and are, therefore, well curved or bellied on each side. This fits them for the most accurate of work, on which account they are generally preferred by expert workmen. They are nearly parallel in width and have one safe edge and one edge cut single, while the face is cut double. Hand-files are also made equaling, the term equaling meaning that, although apparently blunt or of even thickness throughout the length, yet, in fact, there is a slight curvature, due to the file being thickest in the middle of its length. An equaling hand-file is especially suitable for such purposes as filing out long keyways, in which a great part of the file length is in action, and it can, therefore, be easily pushed in a straight line.

The flat file, Fig. 2213, when 10 inches and under in length, is made taper on both its sides and edges, from the middle to the front of the file, and when longer than 10 inches they should be made full taper—that is to say, the taper should extend from the middle toward the heel, as well as toward the point. Flat files are usually double-cut; the coarse-cut being used upon leather, wood, and the soft metals. The flat bastard is that most commonly used, the flat second-cut, smooth, and dead-smooth being used by machinists for finishing purposes, the latter preceding the polishing processes.

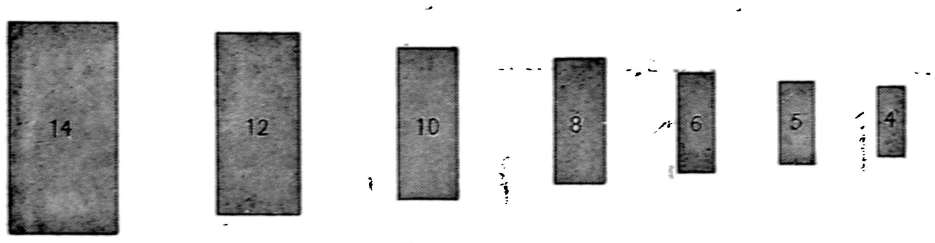

Fig. 2216

Pillar files are tapered in thickness from the middle to each end; the width is nearly parallel, and one of the edges is left safe. They are double-cut, and, although not in general use, are especially adapted to narrow work, such as in making rifles.

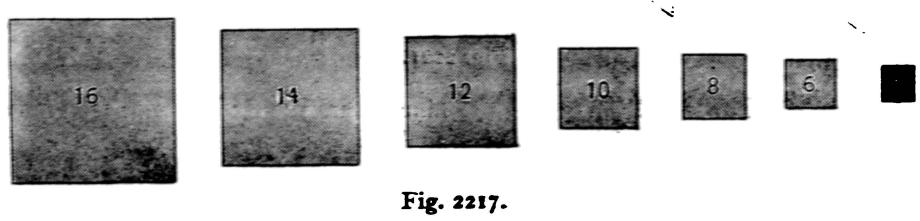

Fig. 2217.

locks, &c. The square file ranges from 3 to 16 inches in length, and is made for general purposes with considerable taper. It is usually double-cut, the bastard being the principal cut, the second-cut and smooth being mainly used by the machinist.

Square blunt files range from 10 to 20 inches in length, of the same sectional sizes as the square taper, and are cut double,

Fig. 2218.

usually bastard. For machinists' use, however, they are used in the second-cut also, and are provided with sometimes one and sometimes two safe sides. Square equalling files are in every respect like the square blunt, except in the care taken to prepare a slight curve or belly in the length of the file, which greatly enhances their value in filing out the edges of keyways, splines,

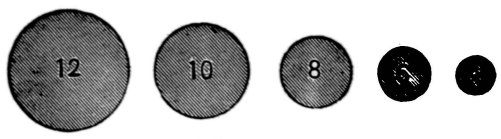

Fig. 2219.

or mortises. The fault of the square blunt, when used for fine or true work, is that the heel, having no belly, is apt to come into too prominent action.

Warding files, Fig. 2218, are made parallel in thickness, but are considerably tapered on their edges. They range in size from 3 to 8 inches in length, progressing by half-inches in the sizes below 6 inches. They are cut double, and usually on both edges,

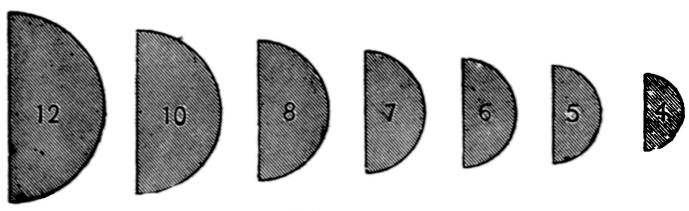

Fig. 2220.

and are mainly used by locksmiths and jewellers, and to but a limited extent by machinists. Some of the warding files are provided with teeth upon their edges only, which are made quite rounding, the cut usually being second-cut, single.

Files deriving their sections from the circle are shown from Figs. 2219 to 2222. "Round files" are circular in section, as shown in Fig. 2219, their lengths ranging from 2 to 16 inches, files. For some classes of work—as, for instance, the circular edges of deep keyways—round, blunt files are used, their sizes running up to 18 and 20 inches, their principal cut being bastard and double.

The gulleting file is a round, blunt saw file, and, like most other files for this purpose, is single-cut (except for a small space at the point, which is left uncut). Its principal use is for extending the gullet of what are known as gullet-tooth and briar-toothed saws.

Half-round files are of the cross-section shown in Fig. 2220, and although their name implies a semicircle, yet, as generally made,

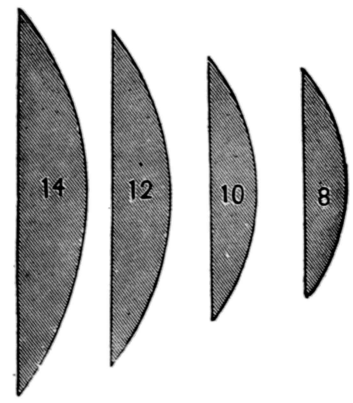

Fig. 2222.

their curvature does not exceed the third part of a circle. They are made taper; the bastard is usually double cut on both its sides; the second-cut and smooth is double-cut on their flat sides, and single-cut on the curve side, except occasionally in the larger sizes, when it is double-cut or hopped. Half-round files for wood usually range in size from 10 to 14 inches, and are of the same shape and taper as the regular half-rounds. They are cut coarse

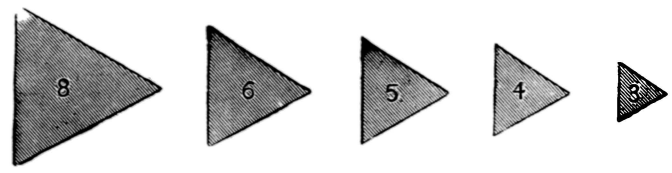

Fig. 2223.

and double, and are used by wood-workers generally. Half-round rasps are also like the regular half-round in shape, the sizes usually called for being 10, 12, and 14-inch. They are used principally by wheelwrights and carriage builders, but are to some extent used by plumbers and marble workers.

Cabinet files are of the section shown in Fig. 2222, being both wider and thinner than the half-rounds, the sectional curvature being somewhat less than the fifth part of a circle. They are made taper from near the middle to the point, while both the files and the rasps are made from 6 to 14 inches in length; 8, 10, and 12

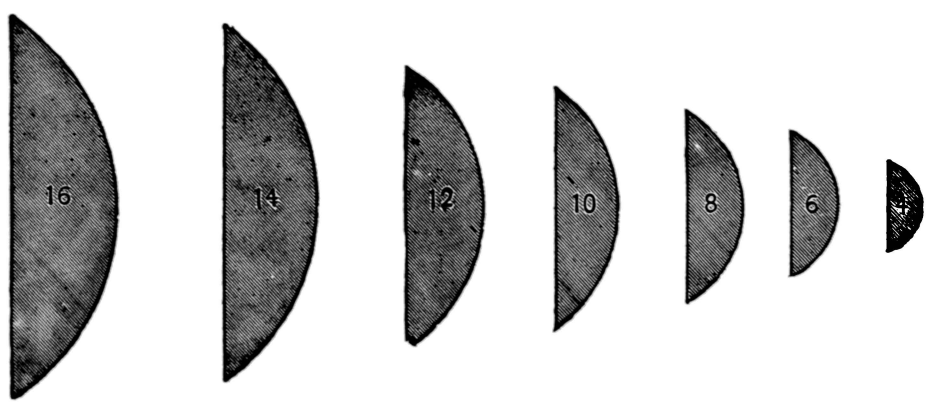

Fig. 2221.

and are usually of considerable taper. The small bastards are mostly single-cut and the larger sizes double-cut. The second-cuts and smooths are rarely double-cut, except in some of the very large sizes. In imitation of double-cut, however, they are sometimes made with the first, or overcut, very open, called "hopped," which adds, however, but very little to the cutting capacity of the file. The very small sizes—as, say, those of one-quarter inch and less in diameter—are often called "rat-tailed" inches are the sizes in most common use. As usually known, the cabinet file is a bastard double-cut. The cabinet rasp is punched smooth, and both the cabinet rasp and file are rarely made of any other degree of coarseness. They are used by cabinet, saddle-tree, pattern, and shoe-last makers, and also by gunstockers and wood-workers generally.

Three-square files are made with equilateral triangular sections, as in Fig. 2223. They are tapered to a small point with consider-

able curve, and are double-cut. The larger sizes—say, from 10 to 14 inches—are usually bastard, and are used to a considerable extent in rolling mills. The smaller sizes are not unfrequently smooth or dead-smooth, and are used in machine shops quite generally for filing interval angles more acute than the rectangle, clearing out square corners, sharpening cutters, &c. Three-square blued files of sizes from 3 to 6 inches are sometimes made. They are mostly second-cut, or smooth and double-cut, and are principally used in machine shops for filing up cutters for working metals.

Cant files, whose cross-sections are shown in Fig. 2224, are usually made blunt and double-cut, mostly bastard, on all three

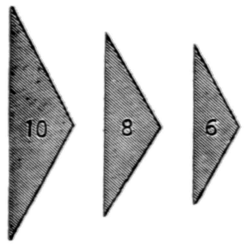

Fig. 2224.

sides. These sizes are usually 6, 8, and 10 inches. Lightning files are of the cross-section shown in Fig. 2225, the term lightning being known principally by those using the saws of this name, and to some extent by those using other cross-cut, M-shaped saw teeth. The obtuse angle of this file is five-canted, while the regular cant is hexagon or six-canted, and it is found to be too obtuse for the purposes required of the saw file. They are made

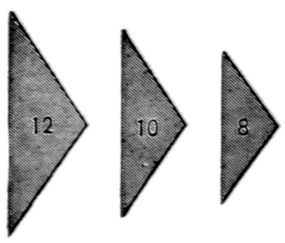

Fig. 2225.

blunt, and range in length from 4 to 12 inches, and are cut (except for a short space near the point) single on their three sides.

Knife files are of the section shown in Fig. 2226, and rarely exceed 10 inches in length, the principal sizes being 4, 5, and 6-inch. They are tapered, resembling somewhat the blade of a knife, and are cut double. The very acute angle of the sides of this file makes it especially useful in filing the inner angles of the rear and main springs of a rifle lock and work of similar shape.

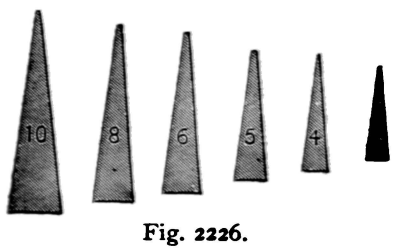

Fig. 2226.

These files are also made blunt. Cross files (sometimes called double half-round or crossing files) are of the section shown in Fig. 2227. They are mostly made to order, either blunt or tapered, and usually double-cut. "Feather-edge" files (Fig. 2227) are but little used by the mechanics of this day. They were formerly used in filing feather springs (as the rear spring of a gun lock is sometimes called), and also the niches in currycombs, which led them to be called by some currycomb files. The few files of this kind which are now made are usually blunt and double-cut. Half-round "shoe rasps" as generally made are of the cross-section shown in Fig. 2228, their sizes ranging from 6 to 12 inches, while 8, 9, and 10-inch are the most common. They are made parallel in width, but with their sides slightly tapered from the middle; the ends are rounded and cut single; the edges are safe or uncut, or if cut are usually made half-file and half-rasp reversed ($\frac{1}{4}$ rasp and $\frac{3}{4}$ file, while sometimes made, are the exception). The file quarters are bastard double-cut, and the rasp quarters second-cut. This form of shoe rasp is the one in general use at this time, having almost entirely superseded the flat and swaged rasps formerly in use.

Reaper files (B, Fig. 2229), so called from their use in sharpening

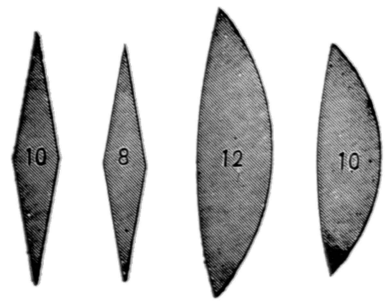

Fig. 2227.

the knives of reaping and mowing machines, are of the cross-section shown. They range in length from 7 to 10 inches, are slightly tapered, and are cut single and on their sides only.

Tumbler files, whose cross-section is shown at A, Fig. 2229, were formerly much used to file the tumblers of gun locks, but are now rarely called for. They are taper and cut double. It will be seen, however, that unless for some special purpose, the pitsaw round or half-round file will be found to answer the same purpose as the tumbler file.

It is obvious that in the use of files the coarser cuts are for use when it is required to remove a maximum quantity of material,

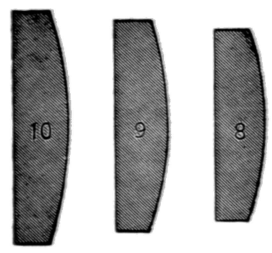

Fig. 2228.

and the finer to produce a more smooth and true surface, and also that the form of file selected is that which will best conform to the shape of the work, or can be best admitted upon or into the work.

In selecting the length of the file, the size of the work and the delicacy of the same are the determining considerations; thus, a 14-inch file would be a clumsy tool upon a small piece of work, as, say, one having an area of $\frac{1}{2}$ inch square. In selecting the shape of the file there are, however, other considerations than the shape of the work. Among these considerations may be enumerated that,

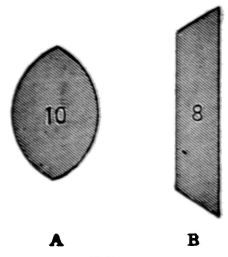

Fig. 2229.

in proportion as the number of teeth on any given file, performing cutting duty simultaneously, is increased, the less metal will be taken off, because the pressure on each tooth is reduced, and the file does not bite or take hold of the work so well; hence it cuts smoother.

To fit the handles to small files, as 6-inch or less, it is simply necessary to bore suitable-sized holes in the handles, and force in

the tang of the file. In doing this care should be taken to bore the hole axially true with the handle, so that the latter may stand true with the file, which greatly assists the production of true and rapid filing.

For larger files the handle should have a small hole bored up it as before, the file tang should be made red hot (a piece of wet rag or cotton waste being wrapped around the heel of the file, so that it shall not get hot and be softened), and forced into the handle by hand, the file and handle being rotated during the

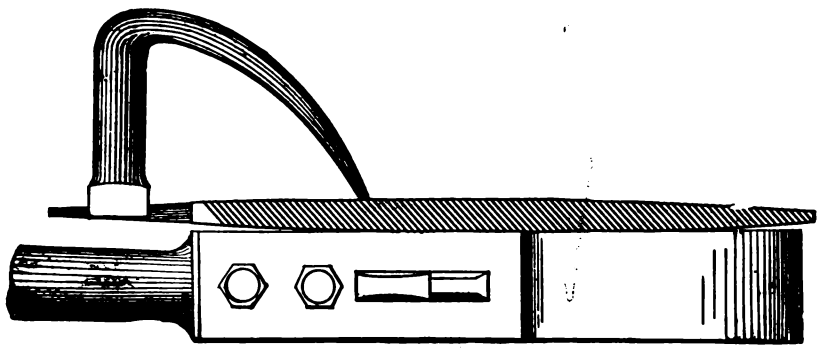

Fig. 2230.

operation, and sighted to insure that the handle is kept true with the centre line of the file. So soon as the tang of the file has entered three-quarters or thereabouts of its length it should be removed and gradually cooled by dipping in water.

When the surface of the work is so large that the file handle would meet the work before the point had reached fully across it, the raised handle shown in Fig. 2230 is employed. The square end of the handle has a dovetail groove into which the tang of the

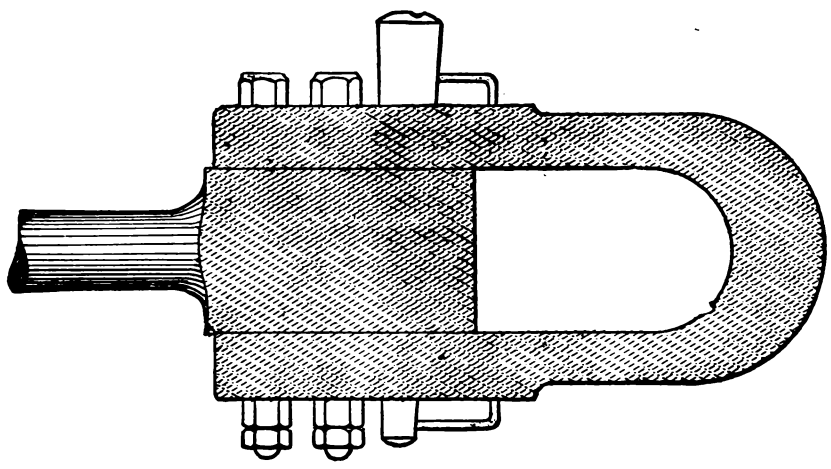

Fig. 2231.

file is fitted. In the figure the file is shown applied to a connecting rod end, and in such broad surfaces it is especially necessary to vary the line of motion of the file after every few strokes, so as to cause the file marks to cross and recross, as shown in Fig. 2231.

The height at which work should be held to file it to the best advantage depends entirely upon its size, the amount of metal to be filed off, and the precision to which the filing requires to be executed.

Under ordinary conditions the work should stand about level with the operator's elbow when he stands in position to file the work. This is desirable so that the joint of the arm from the elbow to the wrist may be in the same plane as the line of motion of the file, which will give the workman the least fatigue. But when the work surface is very broad it should be lower down, so that the operator may reach over all parts of its surface. On the other hand, on very small round work, or work so small as to require but one hand to hold the file, the work may be so high as to require the operator to stoop but very little, in which case the fatigue will be less, while the work will be more in sight, and can be better scrutinized.

When the file is pushed endways it is termed cross-filing, and the teeth cut on the forward or pushing stroke only, and in this case the file should be held as in Fig. 2232, the end of the file handle abutting against the palm of the right hand. But when the file is held in one hand only, the forefinger may be placed uppermost, and either on the file handle or on the file itself, as may be found most convenient. In cross-filing the file should be relieved of cutting duty on the return or back stroke, but should not be removed from the work surface.

For heavy cross-filing on iron or brass, a 15-inch file is sufficiently large for any of the ordinary duty required by the machinist, and will require all the pressure one man can put on it to enable it to cut freely, and move at a suitable speed.

The workman should for heavy cross-filing stand well off or away from the work so as to require to bend the body well forward. His feet should in this case be spread apart so that when the pressure of the hands is placed upon the file it will relieve the forward foot of a great part of the weight of the workman's body, which will be thrown upon the file. The rear foot operates during the forward stroke as a fulcrum, wherefrom to push the file.

At each forward stroke the workman's body should move somewhat in unison with the file; his arms being less extended than would otherwise be the case, and the file being under more pressure and better control.

During the backward stroke the forward foot should again take the workman's weight, while he recovers the upright position.

For less heavy filing and for smooth filing, the workman should stand more nearly upright and nearer to the work.

The heavier the pressure (either in cross-filing or draw-filing), the coarser the file cuts, and the more liable it is to pin and scratch.

In the case, however, of slim files, the pressure is apt to bend the file, causing it to cut at the edges or ends only of the work, as shown at A, in Fig. 2233. This may be avoided by holding the file as in the figure, the pressure of the fingers in the direction of the arrows causing the file to bend, and produce more straight work.

From the nature of the processes employed to cut the teeth of files, they are unequal in height, and as the file in addition to this varies in its straightness or warps in the process of hardening, it becomes necessary in many cases to choose for certain work files whose shape is best suited for it. Suppose, however, that files were produced whose teeth or tops or points were equal in height from end to end of the file, and it would be necessary for the workman to move the file in a true straight line in order to file a straight surface. This the most expert filers cannot accomplish.

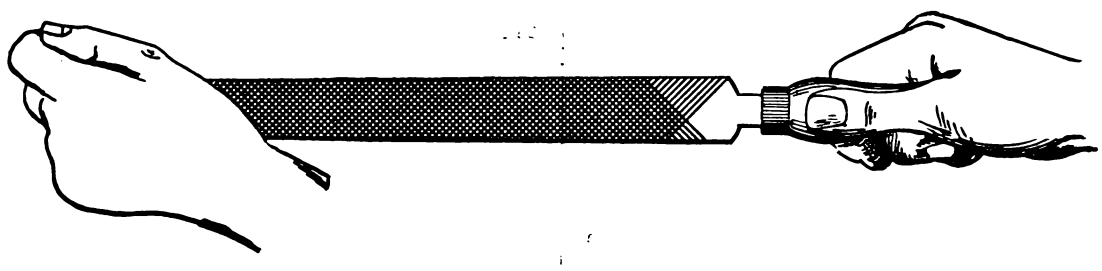

Fig. 2232.

It is for this reason that hand files are made as in Fig. 2234, being thickest in the middle M, and of a curved taper both towards the point P and the heel H, so that when applied to the work the file will bear on the work at A, Fig. 2235, and be clear of it at B and C, which allows the file motion to deviate from a straight line without cutting away the work too much at B and C. The file curvature also enables any part of the file length to be brought into contact with the work or with any required part of the surface of the same, so as to locate or limit its action to any desired part.

If a bellied file (as this shape of file is sometimes termed) be

moved in a straight line it will file flat so long as it is moved to have contact clear across the work, but if the file is concave in its length it can only cut at that part which is in contact with the edge of the work, and the latter must be filed convex.

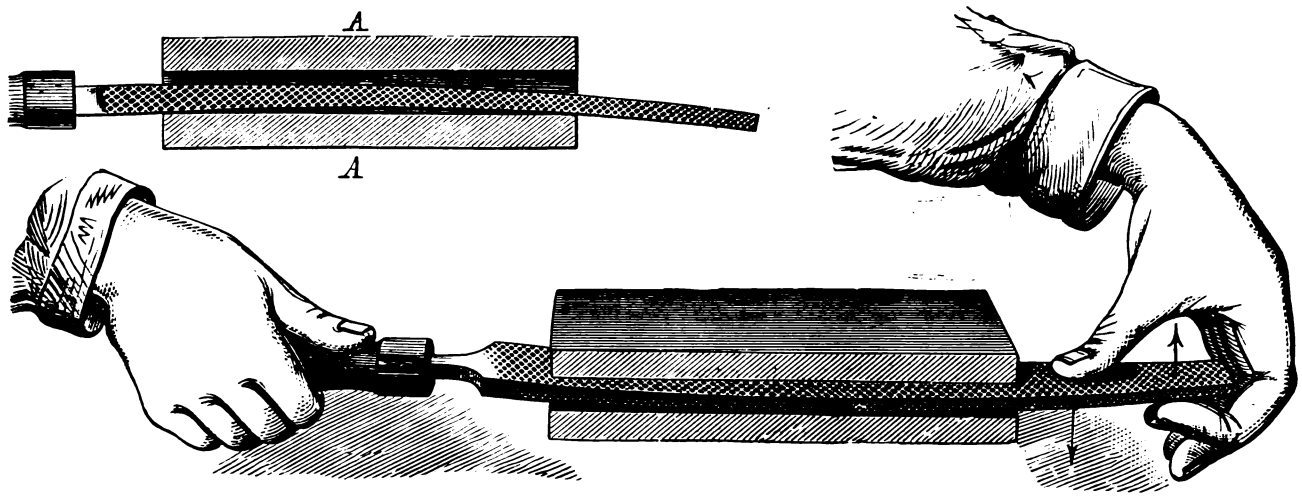

Fig. 2233.

It becomes obvious then that for flat work a bellied file must be used, and that the belly should preferably be of even sweep from end to end.

But files, whatever their shape, and however evenly formed when

Fig. 2234.

soft, warp (as already remarked) in the hardening process, sometimes having crooks or bends in them, such as at E and D, in Fig. 2236. In such a file the teeth at E would perform no duty unless upon work narrower than the length of the concavity at E, while on

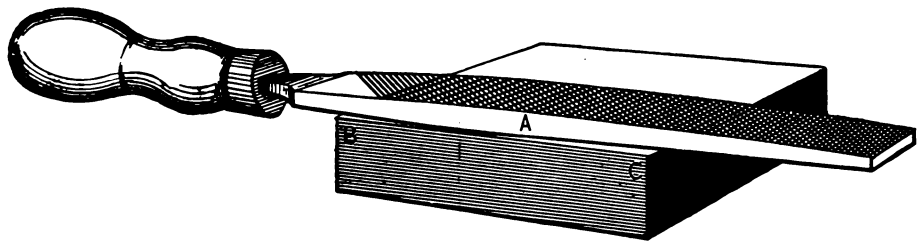

Fig. 2235.

the other side D, the extra convexity would give the file great value for work, in which particular spots only required to be filed, because the teeth at D could be brought to bear on the required spot without fear of cutting elsewhere.

Fig. 2236.

If, however, we have a taper flat file, such as in Fig. 2234, the thickness being equal from H to M, and a curved taper from M to P only, then it would be impossible to file flat unless only that part from M to P be used, because the heel H would meet the work at

Fig. 2237.

the same time as M, and it could not be known where the file would cut, more than that the most prominent teeth would cut the most.

An excellent method of testing the truth of a file, and of finding its high spots is to chalk a piece of board, press the file firmly to it and take several strokes and the chalk will be transferred to the highest parts of the file, showing very distinctly every hill and hollow in the teeth, even on the finest of Groubet files, and it will be found from this test that but very few of the best-made files are true, and that very great care is necessary in selecting a file for flat and true work.

The curvature or belly on a file not only enables but few teeth to be brought into action at any one turn, and thus cause it to cut more freely; but it also enables all parts of the file length to be used and worn equally. Thus in Fig. 2238 are shown two positions of a file, one cutting at A and the other at B, these different locations being due to different levels of the file which may be given by elevating or depressing it at the handle end.

If a file is hollow in one side of its width, and rounding on the other, as in Fig. 2239, the hollow side is unfit for any but the roughest of work, since it will not file any kind of work true; but the rounded side is very effective for flat surfaces, since the number of teeth in action is more limited and their grip is therefore greater, while by canting the file any part of its width may be brought into action. The rounded side is especially advantageous for draw-filing (a process to be hereafter explained).

In all cross-filing, whether performed to clean up a surface, remove a maximum of metal, or prepare the work for draw-filing,

or for reducing the work to shape, the file should be given a slight lateral as well as a forward motion, and it will be found that this lateral motion is more effective if made from right to left, leaving the file marks in the direction of marks B, in Fig. 2240, because the workman has more control over the file (especially if a large one) than when the lateral motion is from left to right; but this latter motion must be given occasionally to prevent the file from cutting deep scratches, and to keep the file surface true.

A new file should be used at first on broad surfaces so that the teeth may not grip or bite the work so firmly that the strain will

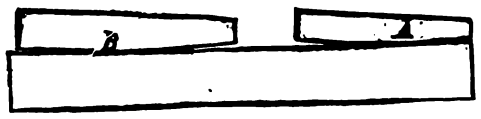

Fig. 2238.

cause their fine sharp edges to break off, which is apt to occur unless their edges are slightly worn off. As a file becomes worn it may be used on narrower work, because the narrower the surface the more readily the file will bite. When a file is much worn, or when it is desired to remove a quantity of metal as quickly as possible, the file may be used at different angles upon the work, as shown in Fig. 2241, which by reducing the number of teeth in action facilitates the cutting, but if this be done with a new file it will break off the points of the teeth.

Cast iron, brass, and copper require a sharper file than do either steel or wrought iron, hence for the first named metals (especially brass and copper) new files are used, and these should not be used upon wrought iron or steel until worn out for the above metals.

Fig. 2239.

In the case of unusually hard cast iron or tempered steel a second-cut file will cut more freely than a coarser grade.

Work to be draw-filed should first be cross-filed with smooth or at the coarsest with second-cut files, so as to remove the scratches of the bastard or rough file before the draw-filing, which should not be done with a rough or bastard file.

Draw-filing consists in moving the file in a line at a right angle to its length, the file being grasped at each end independently of its handle, which may be removed from the file if it be in the way, as in the case of files used on broad surfaces.

Draw-filing is employed for two purposes: first and most important, to fit work more accurately than can be done by cross-filing, and secondly to finish surfaces more smoothly, and lay the grain of the finish lengthwise of the work. The greater accuracy of draw-filing occurs because the high parts of the file can be selected and

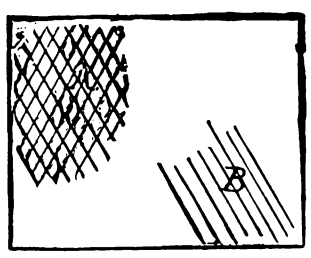

Fig. 2240

the file so balanced that this high part covers the place on the work requiring to be filed, while the strokes may be made to suit the length of the spot to be filed.

In draw-filing the file can be moved more steadily than in cross-filing, and will, therefore, rock so much less that even the novice can with care produce very true work.

Suppose, for example, that a piece of work requires filing in the middle of its length and half way along its width and half along its length, and a well bellied file may be balanced upon C, Fig. 2242, and grasped at its two ends A and B, and used with strokes of a sufficient length to file half the work length as required.

In draw-filing the file should be pressed to the cut on the pushing stroke only, and not on the return or pulling stroke.

Draw-filing produces with a given cut of file a smoother surface than cross-filing, but it will not remove so much metal in a given time.

In draw-filing short strokes will produce better work than long ones, because with the latter the file cuttings are apt to become locked in the teeth of the file, and cut scratches in the work. This is called *pinning*, and the pins cutting deeper than the file teeth produce the scratches.

To avoid this pinning the file surface may be well chalked, which will at the same time cause the file to cut smoother although not quite so freely. It is necessary, however, to clean the file after every

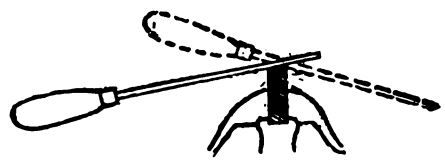

Fig. 2241.

ten or twelve draw-filing strokes so as to remove the filings. This removes the chalk also, hence it requires occasional renewal. For this purpose lumps of chalk are employed, but great care is necessary in its selection, because it sometimes contains small pieces of flint or other stones, and these score and greatly damage the file teeth.

To dislodge the chalk and filings the file surface may be rubbed two or three strokes with the hand, and the file lightly tapped on the vice back. But it will also be found necessary to occasionally

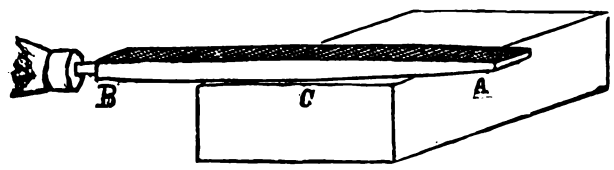

Fig. 2242.

clean the file with a file-brush or file-card. The file-card is brushed across the width of the file so that the wire may reach the bottoms of the rows of teeth and clean them out.

If the pins have lodged too firmly in the teeth to be removed, the scorer shown in Fig. 2243 is employed. This scorer is a piece of copper or brass wire flattened out thin at the end E, which end is pressed firmly to the file teeth and pushed across the width of the file. By this means the thin edge becomes serrated, and the points of the teeth forming the serrations pass down the bottoms of the rows of file teeth and force out the pins. Here it may be

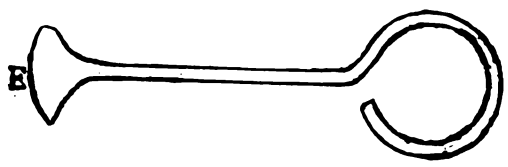

Fig. 2243.

remarked that pinning takes place in cross-filing as well as in draw-filing, and is at all times destructive to either good or quick work.

Oil is sometimes used to prevent pinning and produce a dead finish, which will hide scratches, but it is much more dirty than chalk and no more effective. Neither of these substances, however, is employed upon cast iron, brass, copper, or other than the fibrous metals.

In removing the cross-file marks it will be found that the file will cut more freely if it be slightly canted so that it cuts most at and near the edge, as shown in Fig. 2244, the edge A B meeting the work, the file stroke having progressed from C as shown. This is especially advantageous if the metal be somewhat hard or have a hard skin upon it, or in case of a hard spot, because it will enable the file to bite when, if pressed flat upon the work, it would slip over it.

When draw-filing is resorted to, to obtain a very fine surface, to be finished with emery paper and crocus cloth, it is best to reverse the direction of the file strokes so as to cause the file marks to cross and recross as shown in Fig. 2244, where the marks C cross those previously made, which will not only produce smoother work, but it will partly prevent the file from pinning. It will also be found that the draw-filing will be smoother and pinning less liable to occur when the file strokes cross the fibres or grain of the metal than when they are parallel to that grain; hence when the finishing marks are to be left in a line with the grain and a very smooth surface is required, the draw-filing marks should, just before the final finishing, be across the grain, the final finishing being with the grain simply to reverse the direction of the marks.

Half-round files should be well curved in their lengths on the half-round side, so that when applied to the work any part of the file's length may be brought to bear upon the required spot on the work, as was explained for the flat file, and shown in Fig. 2238. If the flat side is straight or hollow in its length it is of little consequence,

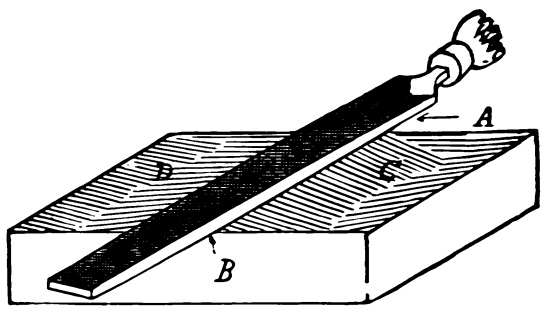

Fig. 2244.

because it can be used upon convex or upon narrow surfaces. The sweep or curve of the file should in its cross-section always be less than the curve of the work it is to operate upon, and the teeth should be brought up sharp on the edges, and over the whole area of the half-round side, which is in inferior files not always the case, because the rows of chisel cuts are too far apart in the width of the file; hence, there is along the length of the file between the rows of full teeth, rows that are not brought fully up, which impair the cutting qualifications of the file.

In using a half-round file to cross file it should at each stroke be swept first from right to left, and after a few strokes from left to

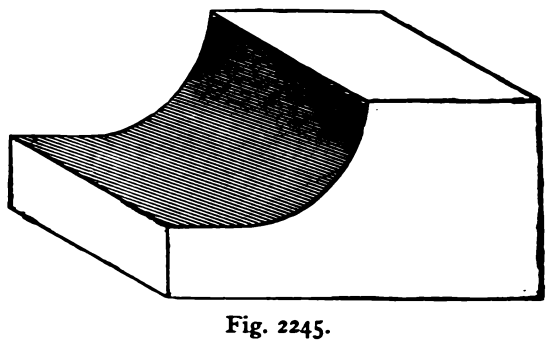

Fig. 2245.

right, so that the file marks appear first as in Fig. 2245, running somewhat diagonal from right to left, and then, when the side sweep of the file is reversed in direction, the file marks will cross after the manner shown exaggerated in Fig. 2247. Unless this is done, the curve will be apt to have a waver in it as in Fig. 2246, or in large curves there may be several waves, and the same thing may occur if the direction of side sweep is not reversed sufficiently often. The file should also be partly swept around the curve, so that if at the beginning of a stroke it meets the work at the upper position in Fig. 2247, then at the end of the stroke it should be as at the lower one, which will also prevent the formation of waves. The larger the curve the less the amount of this sweep can be, the operator giving as much as convenient for the size of curve being filed.

In draw-filing the file should be slightly rotated, so that if at the beginning of a stroke it stands as at A, Fig. 2247, at the end of that stroke it should stand as at position B, and it should at the same time be given sufficient end motion, so as to cause the file marks to cross as shown.

A round file should always be a little smaller at its greatest diameter than the hole in the work. Before inserting it in the hole it should be rotated in the fingers, and the eye cast along it, to select the part having the most belly, which may then be brought to bear on the required spot in the work, without filing any other place, and without filing away the edges at the ends of the hole. For very accurate work it is sometimes desirable to grind on a round file, a flat place forming a safe edge. So likewise a safe edge flat file requires grinding on its safe edge, because in cutting the teeth a burr is

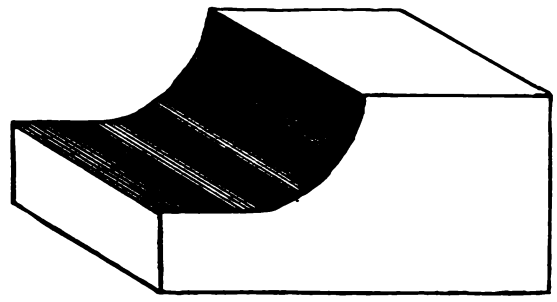

Fig. 2246.

thrown over on the safe edge, rendering it capable of scoring the work when filing close up to a shoulder.

The work should be held as near down to the surface of the jaws of the vice as will allow the required amount of metal to be filed off without danger of the file teeth coming into contact with those jaws, and should be placed so that the filing operation when finished shall be as near as possible parallel with the top of the vice jaws. These jaws then serve somewhat as a guide to the filing operation, showing where the metal requires filing away.

For cutting steel that contains hard spots or places, a second-cut file is more effective than a rough or bastard file.

Rough files are more suitable for soft metals, the bastard cut being usually employed upon wrought iron, cast iron, and steel by the machinist. But in any case the edge of the file is employed to remove small spots that are excessively hard. The file should be clean and dry to cut hard places or spots, and used with short strokes under a heavy pressure, with a slow movement.

When a file has been used until its cutting edges have become too dull for use, it may be to some extent resharpened by immersion in acid solutions; but the degree of resharpening thus obtained has not proved sufficient to bring this process into general or ordinary application; hence, the files are either considered useless, or the teeth are ground off and new ones formed by recutting them.

A recut file is of course thinned by the process, but if properly done

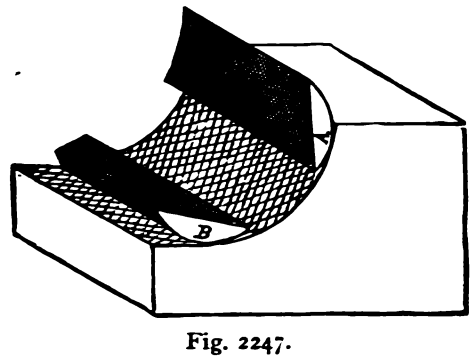

Fig. 2247.

is nearly, if not quite, as serviceable as a new one, providing that in grinding out the old teeth the file be ground properly true to curve; but, unfortunately, this is rarely found to be the case.

An excellent method of resharpening files, and also of increasing the bite of new files (which is an especial advantage for brass work), is by the means of the sand blast. The process consists of injecting fine sand against the backs of the teeth by means of a steam jet, and is applicable to all files, from the rasp to the finest of Groubet files. The action of the sand is to cut away the backs of the file teeth, thus forming a straight bevel on the teeth back, and giving a new cutting edge, and the process occupies from three to five minutes.

Fig. 2248 represents a machine constructed for this purpose. Steam is conveyed by the piping to the nozzles A,A, which connect by rubber hose H,H to sand pipe K, so that the steam jets passing through A,A carry with them the mixture of quartz, sand, and water in the sand box. By means of the overhead guide frame at D,E the file clamp C is caused to travel when moved by hand in a straight line between the nozzles A, A in the steam box, from which the expended sand and water flow down back to the sand box. Thus both sides of the file are sharpened simultaneously, and from the

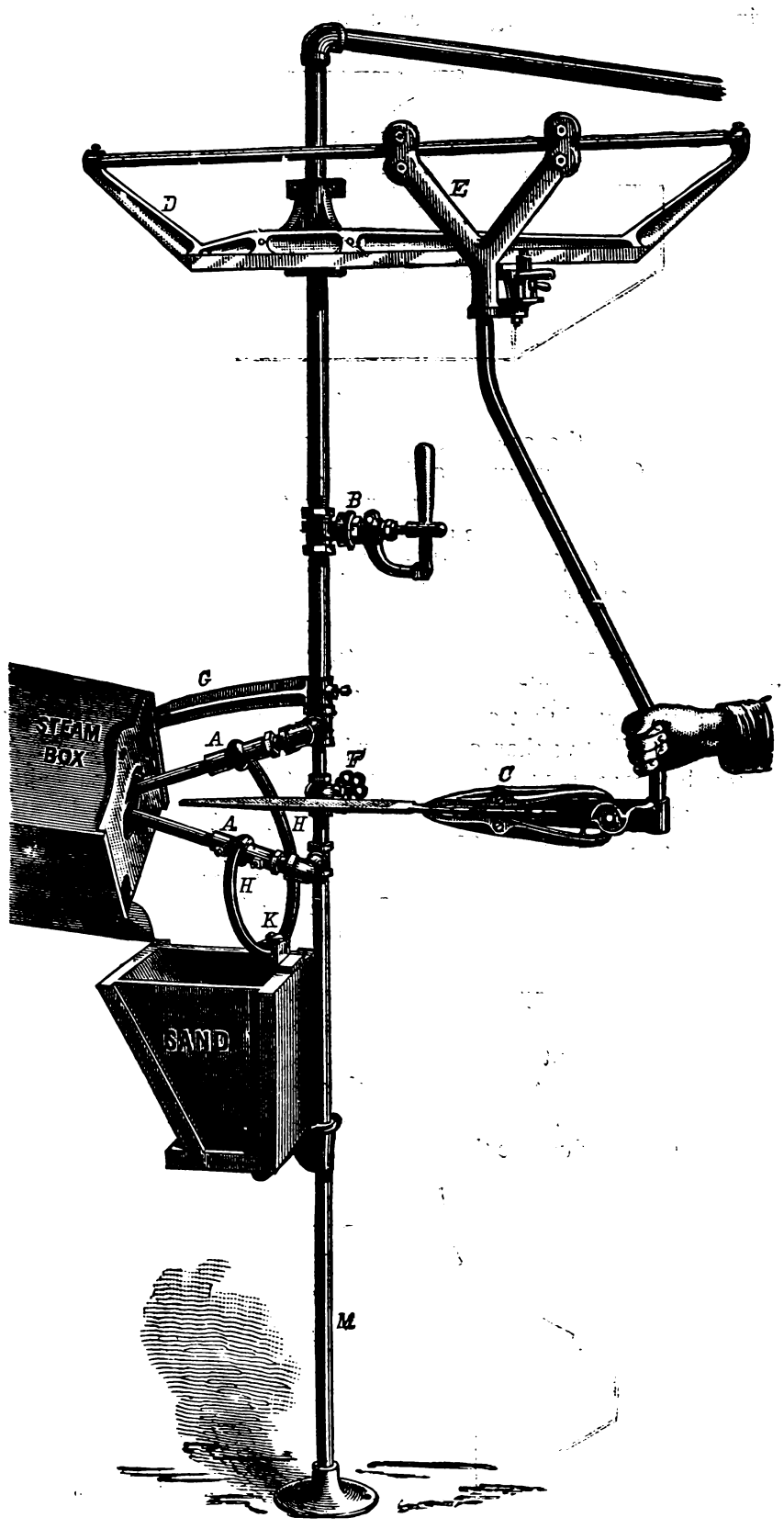

Fig. 2248.

fixed angles of the nozzles and true horizontal motion of the file the angles of all the teeth are equal and uniform.

To distribute the sharpening effects of the sand equally across the width of the file, the carriage has lateral or side motion, as well as endwise, and on the apparatus represented adjustable rollers regulate this side movement. Having the two motions, any part of the file can be presented to the blast.

The following is from *Engineering* :—"A comparative trial of the cutting power of the sharpened files was lately made with the following results : A piece of soft wrought iron was filed clean and weighed ; 1200 strokes were made by a skilled workman with one side of a new 10-inch bastard file, the iron was again weighed, and the loss noted. The other side of this file was then subjected to the sand blast for five seconds, and 1200 strokes were made with this sand-blasted side on the same piece of iron, great care being taken to give strokes of equal length and pressure in both cases. The iron was then weighed, and the loss found to be double as much as in the first case.

"These operations were repeated many times, counting the strokes and weighing the metal each time, and the quantity cut was found to gradually become less for both sides as these became worn. When the weight of metal cut away by 1200 strokes of the sand-blasted side was found to be no greater than had been cut by the first 1200 strokes of the ordinary side when quite new, a second sand blasting was applied to it for 10 seconds, and in the next 1200 strokes its rate of cutting rose to nearly its first figure. When the cut made by the ordinary side of the file fell to about four-tenths of its cut when new, it was considered by the workman as worn out, and a new file of the same size and maker was used to continue the comparison with the one sand-blasted side ; 83 sets of 1200 strokes each and 13 sand-blastings were made on the same side of this file, and in that time it cut as much metal as six ordinary sides. In 99,600 strokes it cut away 14 ozs. avoirdupois of wrought iron, and 16·4 ozs. of steel.

"With an equal number of strokes its average rate of cutting was, on wrought iron, 50 per cent. greater than the average of the ordinary sides, and on steel 20 per cent. greater. As the teeth became more worn, the time of the application of the sand blast was lengthened up to one minute. After the thirteenth re-sharpening its rate of cutting was nine-tenths that of the ordinary side when quite new.

"When the teeth become so much worn that the sand blast ceases to sharpen them effectively, the file can be recut in the usual way, and each set of teeth can be made to do six times as much work as an ordinary file, and to do it with less time and labor, because it is done with edges constantly kept sharp. The time required to sharpen a worn-out 14-inch bastard file is about four minutes, or proportionately less if sharpened before being entirely worn out. Smooth files require much less time. About 4 horse power of 60 lb. steam used during four minutes, and one pint per minute of sand (passed through a No. 120 sieve), and the time of a boy are the elements of cost of the operation."

RED MARKING OR MARKING.—This is a paint used by machinists to try the fit of one piece to another, or to try the work by a test piece or surface plate. It should be composed of dry Venetian red, mixed with lubricating oil of any kind.

Instead of Venetian red, red lead is sometimes used for marking, but it is too heavy and separates from the oil, and furthermore will not spread either evenly or sufficiently thin, and is therefore much inferior to Venetian red.

It is applied to the surface of the test piece or piece of work, and the latter is brought to bear on the surface to be tested, so that it leaves paint marks disclosing where the surfaces had contact, and therefore what parts of the surface require removing in order to make the surfaces have the desired degree of contact.

When either the test piece or the work can be put in motion while testing, one piece is rubbed upon the other or passed along the same in order that the bearing marks may receive the marking more readily and show the bearing spots more plainly, the operation coming under the head of fitting. When neither piece can be given motion, one is made to mark the other by being struck with a mallet or hammer, or to avoid damage to the work from the hammer blows, a piece of wood or copper is interposed. This operation is termed "bedding."

The thickness of the coating of marking varies with the kind of work, the finer fit the work requires to be, the thinner the coat of marking. Thus in chipping a thick coat is applied, for rough filing a thinner, for smooth filing a still thinner coat, and so on, until for the finest of work the coat is so thin as to be barely perceptible to the naked eye. When either the work or the testing piece can be given motion and the surfaces rubbed together, a thinner coat of marking may be used. Marking is usually applied with a piece of rag doubled over and over, and bound round with a piece of twine so as to form a kind of paint-brush. This will give the surface a lighter and more evenly spread coat than would be

Fig. 2252.

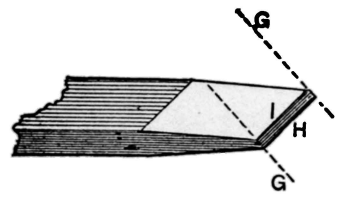

Fig. 2253.

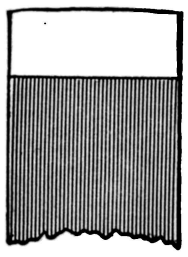

Fig. 2254.

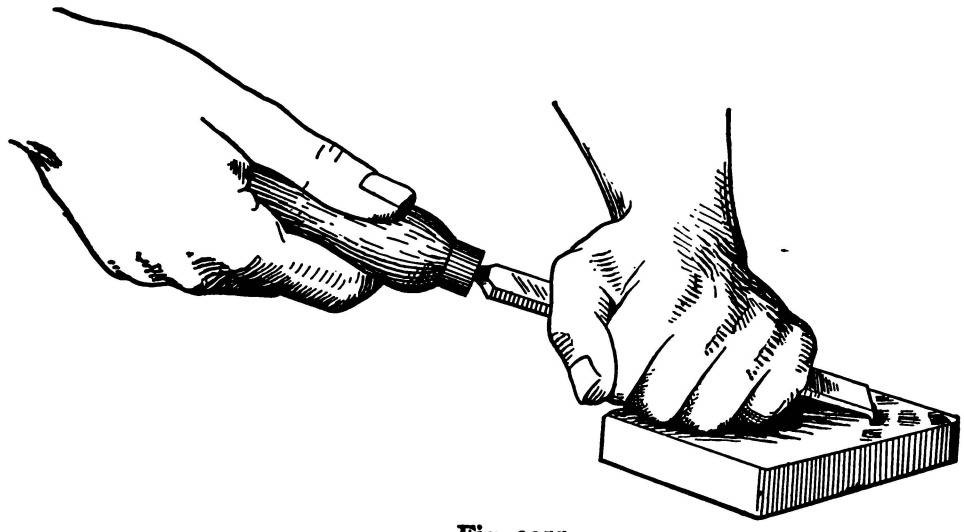

Fig. 2255.

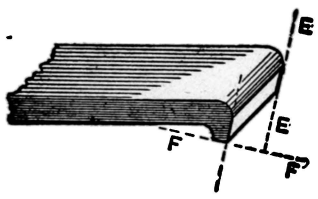

Fig. 2256.

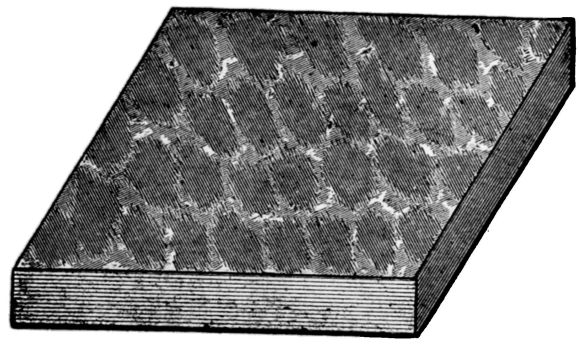

Fig. 2257.

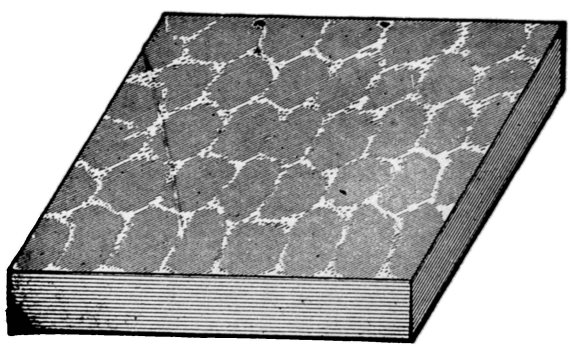

Fig. 2258.

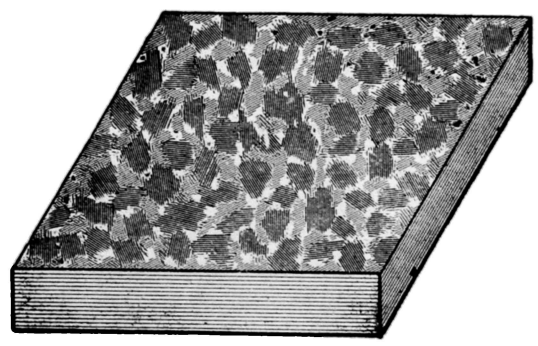

Fig. 2259.

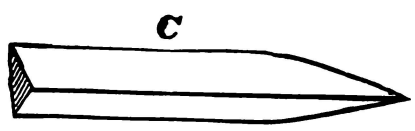

Fig. 2260.

possible with a brush of any kind. For very fine work red marking may be spread the lightest and the most even with the palm of the hand, which will readily detect any grit, dirt, or other foreign substance which the marking may contain from being left exposed.

THE HACK-SAW.—The hack-saw is employed by the machinist for severing purposes, and also for sawing slots in the heads of screws. The blade should be tightly strained in the frame, which will prevent saw breakage. The ordinary method of doing this is to provide the end of the saw frame with a sliding stud threaded at its end to receive a thumb nut. The studs at each end of the blade should be squared where they pass through the frame, as at A, B in Fig. 2249, so that the blade shall not be permitted to twist. An improved form is shown in Fig. 2250, in which the end E has a saw slot to receive the blade F. At the handle end of the blade it is held by a stud sliding through the frame, being squared at B; at C is a nut let into and screwed in the handle, and into or through the nut is threaded the end of the stud, so that by rotating the handle the blade is strained. The curve in the back at A gives a

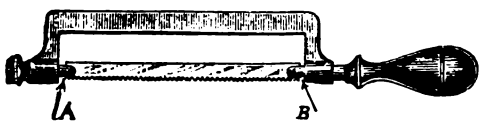

Fig. 2249.

little elasticity to it, and therefore a better strain to the blade. A hack-saw should always be used with oil, which preserves the cutting edge of the teeth.

In sharpening a hack-saw it is best to rest the smooth edge of the blade on a piece of hard wood or a piece of lead, and spread the tops of the teeth by light hammer blows, which serves a two-fold purpose, first it thickens them and enables them to cut a groove wide enough to let the blade pass freely through, and secondly it enables the teeth to be filed up to a sharp cutting edge with less filing.

The screw-driver to be used in saw slots should have its end shaped as at A in Fig. 2251, which will tend to prevent it from slipping out of the saw slot, as it will be apt to do if wedge-shaped as at B, because in that case the action of the torsional pressure or twist is to lift the screw-driver out of the slot.

SCRAPERS AND SCRAPING.—The process of scraping is used by the machinist to true work, and to increase the bearing area of surfaces, while the brass finisher employs it to prepare surfaces for polishing, applying it mainly to hollow corners and sweeps.

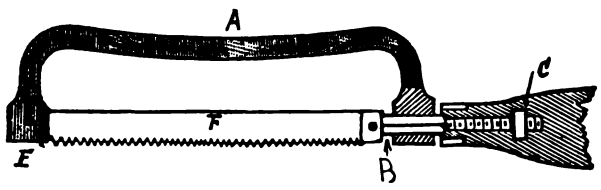

Fig. 2250.

For scraping work to fit it together the flat scraper is used, ordinary forms being shown in Figs. 2252 and 2256.

That shown in Fig. 2252 may be made of a flat smooth file, of about an inch wide, and $\frac{3}{16}$-inch thick, which is large enough for any kind of work. Two opposite faces, one of which is shown at A, are ground beveled so as to leave the end face B about $\frac{1}{16}$-inch thick. This end face is then ground square as denoted by the dotted lines, producing two cutting edges of equal angles, and therefore equally keen. If it were attempted to grind face B at an angle as denoted by the dotted lines G, in Fig. 2253, the lower edge H would cut too keenly, causing the scraper to chatter and cut roughly, while the upper one I would not cut sufficiently easily.

For very smooth work the scraper may be formed as in Fig. 2256, the front face E being ground slightly out of square as shown, and the bottom face F being given considerable angle to the body of the scraper. For very rapid cutting, however, the front face E may be at an angle of less than 90° to the top of the scraper.

The only objection to this form is that the eye lends no assistance in bringing the edge fair with the work surface. The scraper should not exceed about 6 inches in length, exclusive of the handle, for if longer it will not cut well or smoothly, and its end face should be slightly rounded as in Fig. 2254. Its facets should be ground square or straight and carefully oil-stoned after the grinding, the oil-stoning process being repeated for two or three resharpenings, after which it must be reground upon the grindstone.

The scraper should be grasped very firmly in the hands, and held as in Fig. 2255. It requires to be pressed hard to the work during the cutting and lightly during the backward stroke.

The strokes should not exceed for the roughing courses, say, half an inch in length, the first course leaving the work as represented in Fig. 2257.

The second course should be at a right angle to the first, leaving the work as in Fig. 2258, and after these two courses the work should be tested by surface plate, or with the part to which it is to fit, as the case may be. Previous to the testing, however, the work must be carefully wiped clean with old rag, as new rag or waste is apt to leave ravelings behind. The surface plate should be given a light coat of red marking, and then moved backward, forward, and

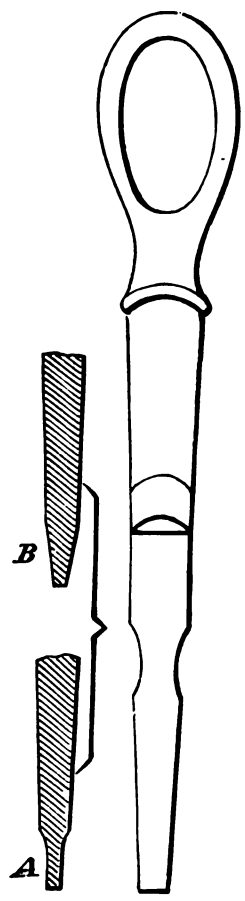

Fig. 2251.

sideways over the work, or, if the work is small, it may be taken from the vice and rubbed upon the surface plate, and the high spots upon the work will be shown very plainly by the marks left by the plate. The harder the plate bears upon the work the darker the marks will appear, so that the darkest parts should be scraped the heaviest.

After applying the plate, the scraper may again be applied, the marks being at an angle to the previous operation, the testing and marking by the plate and scraping process being continued until the job is complete, appearing as shown in Fig. 2259.

It will be noted that the scraper marks are much smaller and finer at and during the last few scrapings; and it may be here remarked that the scrapings are very light during the last few finishing processes.

The strokes of the scraper being made of a length about equal to the acting width of its edge cuts, makes the scraper mark approximately square, on which account it is sometimes termed "block" scraping. It gives an excellent finish, while not sacrificing the truth of the work to obtain the finish.

The scraper will not remove a quantity of metal so quickly as a file, and on this account it is always preferable to surface the work

with a file before using the scraper, even though the work be well and smoothly planed. Not until the file has almost entirely removed the planer marks, and the surface plate shows the surface to be level and true, should the scraper be brought into requisition, the first courses being applied vigorously to break down the surface.

It would appear that scraping might be more quickly done by taking long scraper strokes promiscuously over the work, but in this case the bearing marks are not well defined and do not show plainly, which leads to confusion and causes indecision as to where the most or heaviest scraping requires to be done, whereas in the block scraping the marks are clearly defined and the high patches or spots on the work show very plainly, and the workman is able to proceed intelligently and with precision.

Fig. 2260 represents a three-cornered or "three-square" scraper,

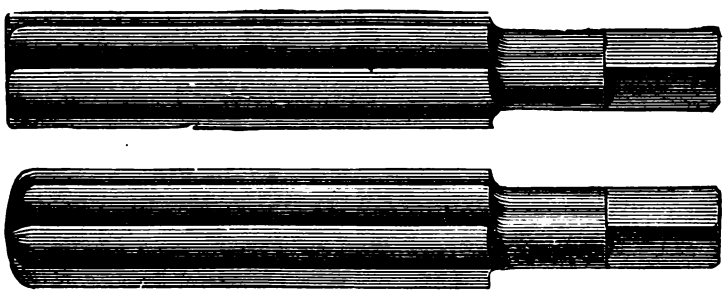

Fig. 2262.

which is used principally upon hollow or very small flat surfaces. The half-round scraper is employed upon holes, bores, or large concave surfaces, such as brasses. Both these tools are for vice work, used in the same manner as described for flat scrapers, while all scrapers cut smoother when the edge is kept wetted with water, as is essential when used upon wrought iron, copper, and steel.

HAND REAMERS OR RYMERS.—The hand reamer is employed for two purposes, first, to make holes of standard diameter and smooth their walls, and second, to bring holes in line one with the other.

Fig. 2261 represents an ordinary solid hand reamer for parallel holes. The teeth are ground so that their tops form a true circle, this grinding being done after the reamer has been hardened and tempered, because in these processes the reamer is apt to get both out of round and out of straight.

In some practice the reamers are formed as shown in Fig. 2262, and are made in sets of three for each size; the first is slightly taper from end to end, the second is slightly tapered at the entering end for a length about or nearly equal to the diameter, and the third is parallel and rounded on the end like the second, and in many cases only three teeth are employed.

Fig. 2263 represents a reamer in which the distance between the cutting edges A B, Fig. 2264, is greater than between B C, and so on, the spacing decreasing from tooth A to tooth *a*. The spacing of *a*, *b*, &c. to *f* on the other side is also irregular, so that if the reamer be given half a revolution no two teeth will have arrived at similar positions except A and *a*, the former arriving at the position occupied by the latter.

Now suppose that a hole to be reamed has a hollow or spongy seam along it, and if the reamer be regularly spaced, there will at this point occur a lateral movement of the reamer that will impair the roundness of the hole, and this lateral movement the irregular spacing tends to prevent.

If a solid reamer is made to standard gauge diameter when new, and the bolts or pins turned to standard diameter, then by reason of the wear of the reamer the work will become gradually a tighter fit and finally will not go together, hence the reamer must be restored to standard diameter, which may be done by upsetting the teeth with a set chisel. Furthermore the workman's measuring gauges are themselves subject to wear, those for measuring the pins wearing larger and those for the holes wearing smaller, and this again is in a direction to prevent the work from fitting together. It is preferable, therefore, to employ adjustable reamers.

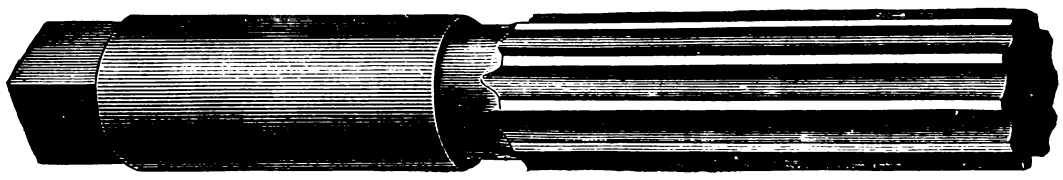

Fig. 2261.

Thus Fig. 2265 represents an adjustable reamer in which the teeth fit tightly into dovetail grooves, that are deeper at the entering than at the shank end of the reamer, so that by forcing the teeth up the grooves towards the shank the diameter is increased.

Both castings and forgings are found to alter somewhat in shape in proportion as their surfaces are removed by the machine tools, so that the shape of the work undergoes continuous alteration.

Suppose, for example, that a piece of metal two inches square and four inches long, has a hole cast in it of an inch in diameter, and when finished it is to be $1\frac{3}{4}$ inches square, $3\frac{3}{4}$ inches long, and have a hole $1\frac{1}{8}$ diameter. Let it be chucked in a lathe or shaping machine and have its surfaces cut down to the required dimensions. Removing the metal to true the first surface will reduce the strain on that side of the casting and alter the shape of the whole body, but this alteration of form will not occur to its full extent until the piece is removed from the pressure of the chuck jaws, or other clamping device holding it in the machine, because this pressure holds it; as a result the surface will not be so true after leaving the machine as it was before. On surfacing the second side of the piece, the internal strain is still further reduced, and a second alteration of form ensues, and so on at the surfacing of every side of the piece. Now let the piece be chucked true to have the hole

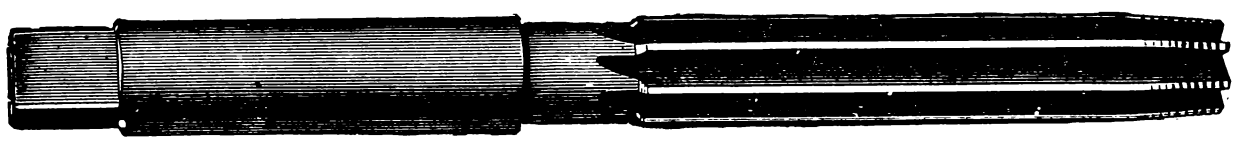

Fig 2263.

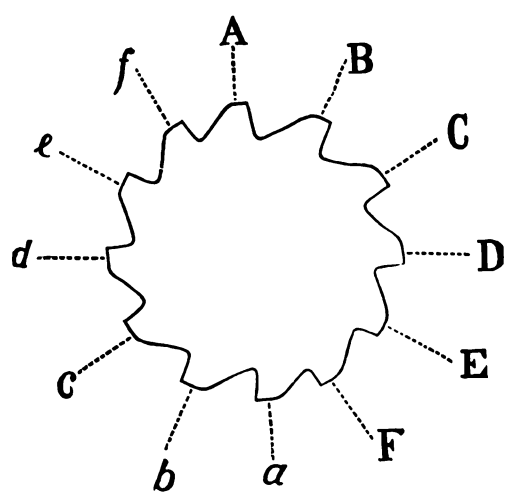

Fig 2264.

bored out, and the removal of the metal in the hole will again reduce the internal strain and the form of the body will again alter.

Suppose, however, that the piece after having its surfaces thus

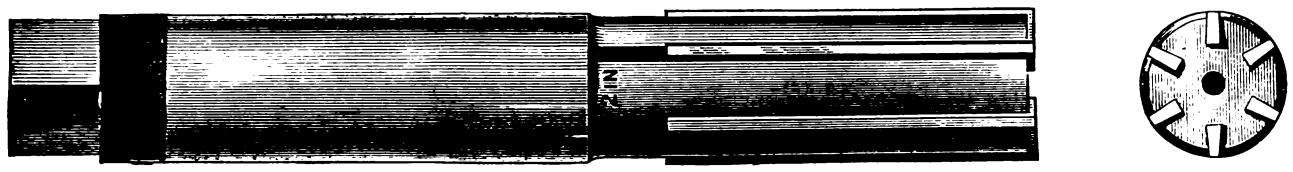

Fig. 2265.

removed, and its hole bored as true as may be, were again trued over each surface, and in its bore there will still be at each surfacing and at the boring an alteration of form, although it may be to

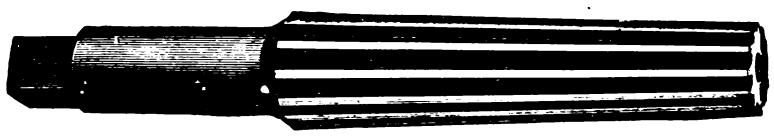

Fig. 2266.

a very minute degree, and from these causes the use of the reamer for work requiring to be very true becomes indispensable.

Fig. 2266 represents a taper hand reamer with straight flutes. It is preferable, however, to give the flutes a left-hand spiral, as was explained with reference to reamers for lathe work.

Fig. 2267.

The frames of large machines are frequently composed of parts that are bolted together after having the holes for shafts, &c. bored, and to insure the alignment of these holes after the frames are put together a hand reaming bar, such as in Fig. 2267, is employed, A and B being two shell reamers fastened to the bar by a pin.

Reamers are sometimes employed to enlarge holes or bring them fair one with another, without reference to their being precise to a designated diameter; thus Fig. 2268 represents a half-round reamer of the form used by boiler makers to bring rivet holes fair, and sometimes by machinists to ream the holes for taper securing pins. The flat face is cut down to below the centre line, so that the back requires no clearance ground upon it.

The square reamer shown in Fig. 2269 is used for rough work generally, although with careful grinding and use it will produce excellent results upon work of small diameter. Brass finishers generally prefer a square reamer to all others for reaming the bores of brass cocks, &c., and some of them prefer that one edge only be sharpened to cut, the other three being oil-stoned off so as not to cut, but simply serve as guides. The square reamer is very easily sharpened whether by grinding or oil-stoning; the flat sides are operated on, taking care to keep them straight and the thickness even on the two diameters, so that, the sides being

Fig. 2268.

straight and the reamer square, it will cut taper holes whose sides will be straight. If the reamer is not ground square, two only of

Fig. 2269.

the edges will be liable to have contact with the work bore, causing the reamer to wabble, and rendering it liable to break.

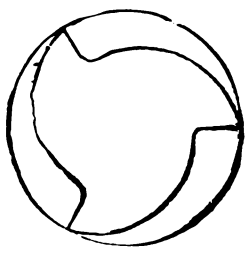

Fig. 2270.

Another and very good form of reamer for the rapid removal of metal is shown in Fig. 2270, having three teeth and a good deal of clearance, which enables it to work steadily and cut freely

CHAPTER XXVI.—VICE WORK—(*Continued*).

IN most of the operations of the machine-shop, the work of the chisel is followed by that of the file; hence, as an example in the use of the chisel independent of that of the file, the cutting of the teeth upon files may be given as follows:—

The largest and smallest chisels commonly used in cutting files are represented in two views and half size in Figs. 2271 and 2272. The first is a chisel for large rough files; the length is about 3 inches, the width 2½ inches, and the angle of the edge about 50°; the edge is perfectly straight, but the one bevel is a little more inclined than the other; this chisel requires a hammer of about 7 or 8 pounds weight. Fig. 2272 is the chisel used for small superfine files; its length is 2 inches, the width ½ inch; it is very thin, and sharpened at about the angle of 35°; it is used with a hammer weighing only 1 or 2 ounces; as it will be seen, the weight of the

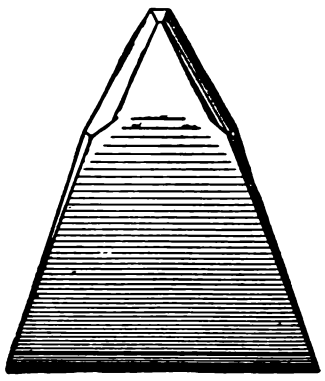

Fig. 2271.

blow mainly determines the distance between the teeth. Other chisels are made of intermediate proportions, but the width of the edge always exceeds that of the file to be cut. The first cut is made at the point of the file; the chisel is held in the left hand, at a horizontal angle of about 55° with the central line of the file, as at *a a*, 2273, and with a vertical inclination of about 12° to 4° from the perpendicular, as represented in Fig. 2274, supposing the tang of the file to be on the left-hand side. The following are nearly the usual angles for the vertical inclination of the chisels, namely: For rough rasps, 15° beyond the perpendicular; rough files, 12°; bastard

Fig. 2272.

files, 10°; second-cut files 5°, and dead-smooth-cut files 4°. The blow of the hammer upon the chisel causes the latter to indent and slightly to drive forward the steel, thereby throwing up a trifling ridge or burr; the chisel is immediately replaced on the blank, and slid from the operator until it encounters the ridge previously thrown up, which arrests the chisel or prevents it from slipping farther back, and thereby determines the succeeding position of the chisel. The chisel having been placed in its second position, is again struck with the hammer, which is made to give the blows as nearly as possible of uniform strength, and the process is repeated with considerable rapidity and regularity, 60 to 80 cuts being made in one minute, until the entire length of the file has been cut with inclined parallel and equidistant ridges, which are collectively denominated the "first course." So far as this one face is concerned, the file, if intended to be single-cut, would be then ready for hardening, and when greatly enlarged its section would be somewhat as in Fig. 2274.

The teeth of some single-cut files are much less inclined than 58°; those of floats are in general square across the instrument. Most files, however, are double-cut, and for these the surface of the file is now smoothed by passing a smooth file once or twice along the face of the teeth, to remove only so much of the roughness as would obstruct the chisel from sliding along the face in receiving its

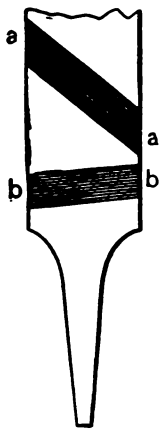

Fig. 2273.

successive positions, and the file is again greased. The second course of teeth is now cut, the chisel being inclined vertically as before, or at about 12°, but horizontally about 5° to 10° from the rectangle, as at *b b*, Fig. 2273. The blows are now given a little less strongly, so as barely to penetrate to the bottom of the first cuts, and consequently the second course of cuts is somewhat finer than the first. The two series of courses fill the surface of the file with teeth which are inclined toward the point of the file. If the file is flat and to be cut on two faces, it is now turned over; but to protect the teeth from the hard face of the anvil a thin plate of pewter is interposed. Triangular and other files require blocks of lead having grooves of the appropriate sections to support the blanks, so that the surface to be cut may be placed horizontally. Taper files require the teeth to be somewhat finer toward the point, to avoid the risk

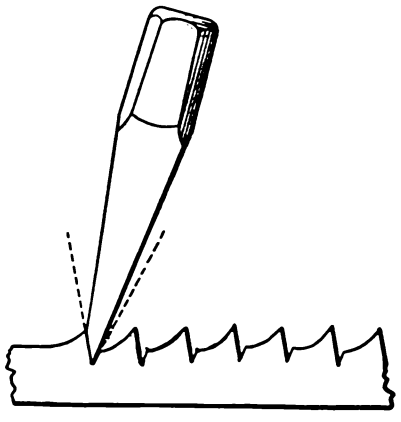

Fig. 2274.

of the blank being weakened or broken in the act of its being cut, which might occur if as much force were used in cutting the teeth at the point of the file as in those at its central and stronger part. Eight courses of cuts are required to complete a double-cut rectangular file that is cut on all faces, but eight, ten, or even more courses are required in cutting only the one rounded face of a half-round file. There are various objections to employing chisels with concave edges, and therefore, in cutting round and half-round files, the ordinary straight chisel is used and applied as a tangent to the

curve. It will be found that in a smooth, half-round file 1 inch in width, about twenty courses are required for the convex side, and two courses alone serve for the flat side. In some of the double-cut, gullet-tooth saw-files, as many as twenty-three courses are sometimes used for the convex face, and but two for the flat. The same difficulty occurs in a round file, and the surfaces of curvilinear files

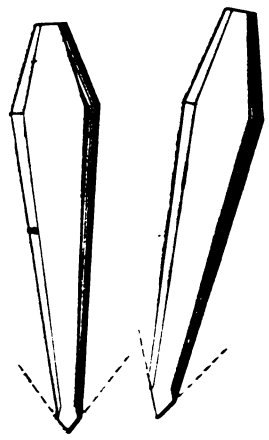

Fig. 2275.

do not therefore present, under ordinary circumstances, the same uniformity as those of flat files.

The teeth of rasps are cut with a punch, which is represented in two views, Fig. 2275. The punch for a fine cabinet rasp is about $3\frac{1}{2}$ inches long and $\frac{5}{8}$ inch square at its widest part. Viewed in front, the two sides of the point meet at an angle of about 60°;

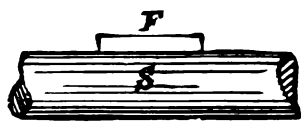

Fig 2276.

viewed edgewise, or on profile, the edge forms an angle of about 50°, the one face being only a little inclined to the body of the tool. In cutting rasps, the punch is sloped rather more from the operator than the chisel in cutting files, but the distance between the teeth of the rasp cannot be determined, as in the file, by placing the punch in contact with the burr of the tooth previously made. By

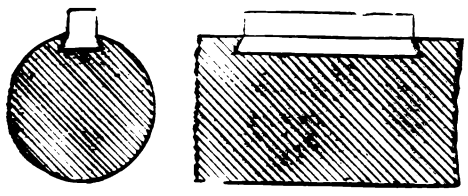

Fig. 2277.

dint of habit the workman moves—or, technically, hops—the punch the required distance; to facilitate this movement, he places a piece of woollen cloth under his left hand, which prevents his hand from coming immediately in contact with and adhering to the anvil.

As an example in the use of the chisel for chipping purposes, let it be required to fasten a feather on a shaft.

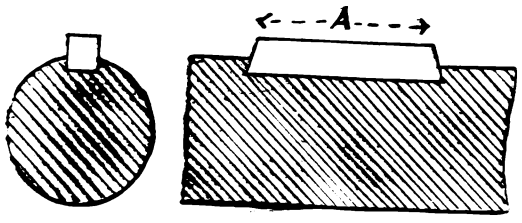

Fig. 2278.

There are four methods of inserting feathers: First, a shaft may have a parallel recess sunk into it and a parallel feather may be driven in; second, the feather may be made slightly taper and driven in; third, the feather may be dovetailed on the sides and ends both, or on the ends only, and as one or the other of these is the proper method, and the process is the same for both, one only need be described.

In Fig. 2276 let S represent a shaft and F a feather, required by the drawing to be permanently fixed therein. The drawing will not, in ordinary shop practice, give any instructions as to how the feather is to be fastened; hence the mechanic usually exercises his own judgment about the matter, or is governed by the practice of

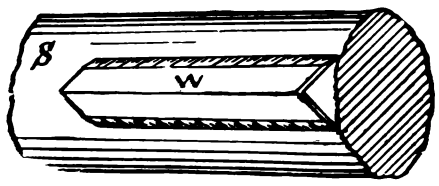

Fig. 2279.

the shop. If left to his own judgment he may determine to so fix it that it may be locked on all four sides, as in Fig. 2277, or he may simply set it in as in the similar views shown in Fig. 2278.

The method shown in Fig. 2277 is the most secure and best job; but, on the other hand, it is the most difficult and costly. The difficulty consists in filing the parallel part above the surface of the shaft to a line that shall be quite even with the surface of the shaft.

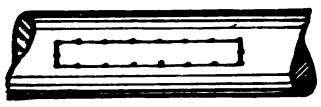

Fig. 2280.

This difficulty may be overcome by leaving the sides parallel, and making the length A equal to the length of the acting part of the key, and the bottom B as much longer as may be required to get the required amount of dovetail on the feather ends.

The first thing to do is to mark off the keyway by scribing lines on the surface of the shaft, indicating the location for the feather

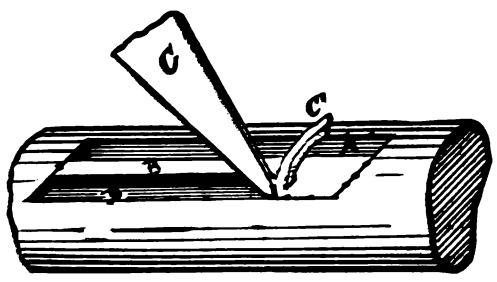

Fig. 2281.

seat; and for this purpose nothing is better than the key seat rule shown in Fig. 2279, in which W is the key seat rule, and S the shaft. After the lines are drawn they should be defined by centre-punch dots, as in Fig. 2280, and then the metal should be cut out on the sides first, using a cape chisel, and cutting close to the side lines, as in Fig. 2281, in which A is a cape chisel cut taken along one side, D a second cape chisel cut, being carried along the other side, C the

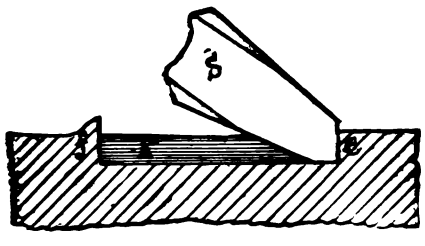

Fig. 2282.

cape chisel, C' the cut taken by the chisel, and B a piece of metal to be cut out after the cape chisel has done its work. Suppose, now, the mass of the metal is removed, then the dovetailing is performed as follows: Next the *setting* or *upsetting* is proceeded with as shown in Fig. 2282, which is a side sectional view. S is a set chisel driven

by hammer blows against the walls of the feather seat (as against the end *e*), causing it to bulge up, as shown at *f*. This setting will enlarge the feather seat or recess, so that the wide part of the dovetail on the feather will just pass in (the dotted lines shown in Fig. 2281 having, of course, been marked to the size of the feather, where it will, when fixed, meet the surface of the shaft). The feather is then placed in its seat and bedded properly by red marking applied to its bottom surface to show the high spots on the seat of the recess,

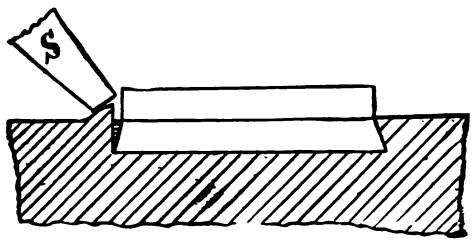

Fig. 2283.

and when properly bedded it is fastened, as in Fig. 2283, in which S is a set chisel, which, by being struck with hammer blows, closes the bulged metal back again on the dovetail of the feather, and firmly locks it in the shaft. And all that remains is to file the shaft surface around the feather level with the surrounding surface, there being usually a little surplus metal from the upsetting.

As an example of chipping and filing let it be required to chip and file to shape and to fit a knuckle joint (or a double and single eye,

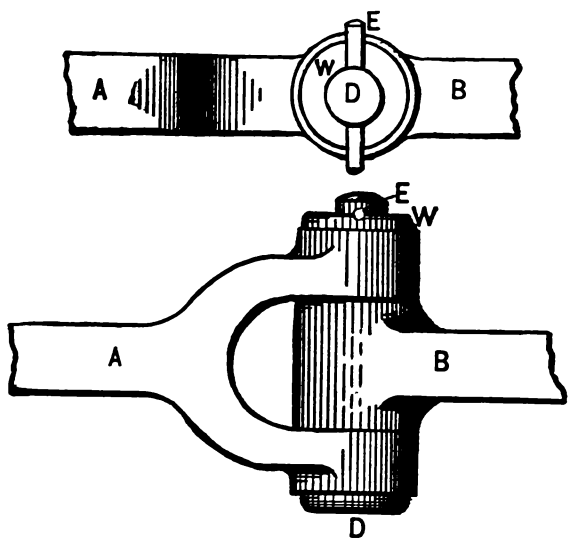

Fig. 2284.

as it may more properly be termed), such as in Fig. 2284. The eye being marked out by lines, the first operation will be to remove the surplus metal around the edges by chipping, which should be done (with the pin in place, so that it may support the eye) before the joint faces are filed at all, and should be carried in a direction around the eye, as shown in Fig. 2285, in which *v* is the vice jaw, E a lead clamp, C the cut, and D the chisel. By chipping in this direction two ends are served: first, the force of the chipping blows

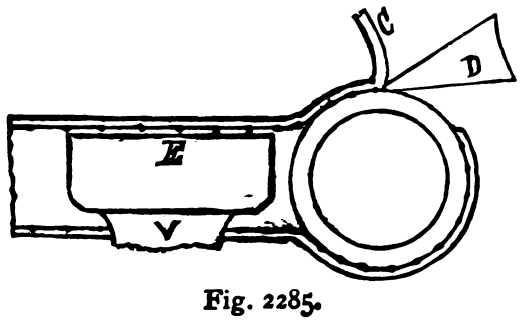

Fig. 2285.

is less likely to bend the eye if it is a light one, and, secondly, the chipping will not break out the metal at the edge of the eye, which it would be apt to do if the chipping was carried across. This is shown in Fig. 2286, where a chisel cut is supposed to have been carried across from A to B and a piece has broken out at B. If the width of the eye is too broad for one chisel cut, a cape chisel should be run around it, as in Fig. 2287, A D showing the cutting, the flat chisel cuts B,C being taken separately afterwards.

In order to illustrate the filing clearly, it will be necessary to show more metal to be filed off than would be the case in practice, unless the eye were very small, in which case it would not pay to chip.

Put the eyes together with the pin in and let the two lowest places on the edges coincide. Then file a flat place clear across them, as

Fig. 2286.

shown in Fig. 2288 at F, making it parallel to the pin, and, say, down to within $\frac{1}{100}$ of the finished depth. To test the parallelism of the flat place, take out the pin and apply to the flat place a square, rested against the radial face of the double eye, or measure its

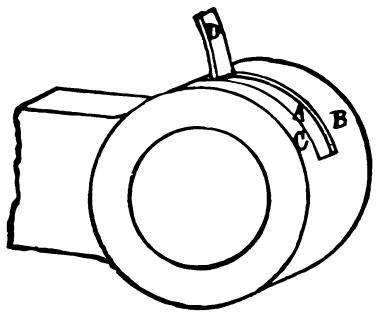

Fig. 2287.

distance from the hole of the eye on each side of the double eye, that is at each end of the hole.

When it is true and down to the required size, put the eyes together and let their relative positions be such that the flat places do not coincide, and that on the double eye will serve as a guide to

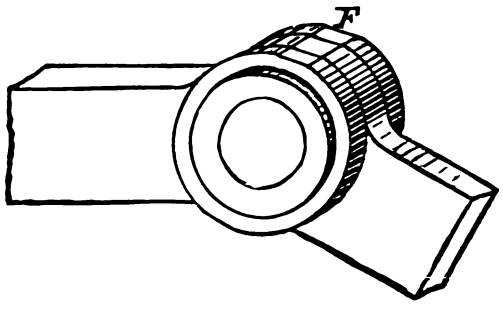

Fig. 2288.

carry the filing around the single eye, while that on the single eye will serve as a guide to carry the filing around the double eye, as will be seen on reference to Fig. 2289, in which the flat places A,B on the double eye serve as a guide to file C down to, while the flat place on the single eye at D is a guide to file the metal at E,F down to, and it

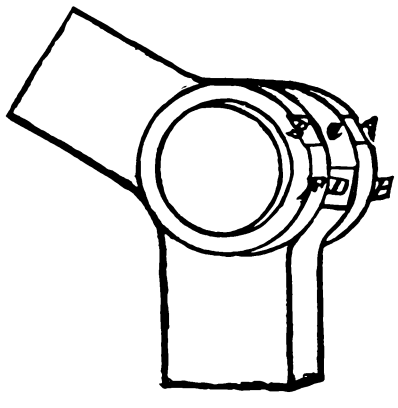

Fig. 2289.

is obvious that by moving the eyes to different positions the eye may on that side be filed true and to circle.

When the filing has thus been carried around as far as the movement of the eyes permits on that side, turn the single eye over in the double eye, and they will appear as shown in the end view,

Fig. 2290, A being the filed side of the single and E D that of the double eye; hence the metal at C,B must be filed down level with A, and that at F down level with E,D.

We have assumed that the edges only required finishing irrespective of the joint faces; but let it be assumed that the whole of the eye has been dressed up by machine tools, and that it requires fitting and finishing by the file both on its joint faces and on its edges.

If the eye has been bored and faced in the lathe the faces will be about true with the hole, but if it has had its faces trued in a machine, as a planer or slotter, and the hole bored subsequently in a slotting machine, the hole may not be true to the faces. This may occur from want of truth in the chucking devices, from these devices having been held to a table or carriage moving on slides, and having lost motion or play, in which case from the leverage of the pressure of the boring tool-reamer or bit, this table may have lifted to the

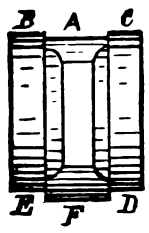

Fig. 2290.

extent of such play, in which case the hole will not be at a right angle to the face or faces.

First, then, these faces must be tested for truth and smoothed by filing. The best testing device is a pin and washer, the pin neatly fitting the hole in the eye and the washer neatly fitting the pin. The radial face of the pin head and of the washer should then be given a light coat of marking, and be inserted in the eye, as shown in Fig. 2291, in which *a* is the pin head and B the washer. If each be then rotated under pressure against the eye, they will mark the high spots, which may be filed and draw-filed until an even contact all around is shown.

The single eye should be similarly faced and fitted, a somewhat tight fit, into the double eye. In a job of this kind, where accuracy of fit is essential, it is usual to bore the hole about $\frac{1}{100}$ inch smaller than its finished diameter, and after fitting the two eyes, to ream out the eyes while bolted together.

For the reaming the two eyes should be clamped together. The single eye is left somewhat too tight a fit to the double eye to permit of the finishing being done after the holes are reamed, because the reaming may slightly alter the axial line of the hole. The two bolts

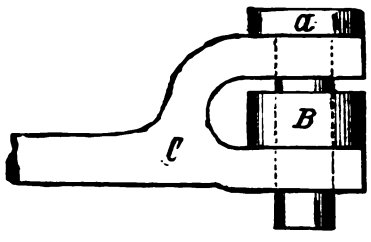

Fig. 2291.

holding the clamping plates should be brought just home on the plates, and then tightened up gradually and alternately, so that the eyes may be gripped fair, and not liable to move during the reaming. The bores of the eyes should be set as true as possible one with the other before the plates are tightened upon the eyes, for if it is attempted to set the eyes true by hammer blows afterwards, the pressure of the plates would cause the arm or hub of the double eye which received the hammer blow to move more than the other, or, in other words, to spring out of its normal position, and the eye will be distorted. But when released from the pressure of the clamping plate the double eye will resume its normal shape, and the holes will not be axially true in the two eyes.

After the holes are reamed the temporary pin and washer used for the facing will be too loose, and the proper pin should be used for all future operations. The eyes should be put together with a light coat of marking on both faces of the single eye, and, with the pin in place, one eye should be moved back and forth, when they may be taken apart again and filed on the high spots. When by repetition of this process they fit properly the outside edges may be filed up, as already described.

It is obvious, however, that the pin and washer shown in the figure may be hardened and used to file the edges up before the reaming, in which case, their diameters being equal, and equal to that of the required finished diameter of the eye, it is easy to file the eye edges true and to size; but even in this case the eyes should be finished by reversing and moving as before described. There is, however, the objection to filing the edges—first, that the joint will show plainer, because in filing the side faces to fit the single into the double eye, that part of each face near the edge is apt to be filed away slightly too much, causing the joint to show; but if the circumferential edges of the eye be filed last, the part so filed away is removed and the joint may be made almost invisible.

The best plan of all is to first fit the eyes, then ream them out and then provide a hardened pin and washer to fit the reamed hole, then file down the circumferential edges nearly level with the pin and washer and finish by reversing and moving the eyes as before described.

In the absence of any pin and washer, such as shown in Fig. 2291, the inside faces of the jaws of the double eye must be filed parallel to the outside radial faces of the single eye, the outside surfaces being trued when the hole is bored. If none of the surfaces have been trued with the hole, the outer ones should first be trued, using a T-square (if there is no pin) to test the truth of the face with the hole, and the inside jaw faces must be trued with the

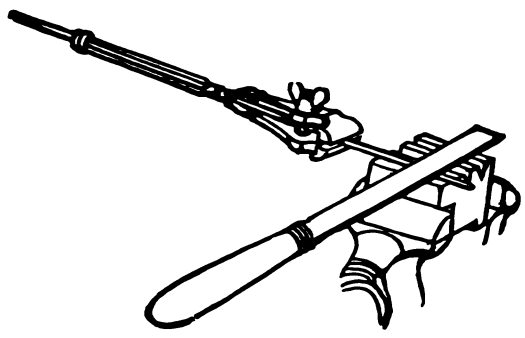

Fig. 2292.

outside, measuring each jaw with outside calipers, and the width between the jaws with inside calipers.

Let us now suppose that it were attempted to first fit the single to the double eye a tight fit, then to ream the hole and then to make the joint an easy working fit. In this case the finished hole in one eye may become out of true with that in the other, that is, it may not be parallel with that in the other, and for the following reasons:—The holes of the two eyes will rarely come quite true with each other, even though the radial faces of the eyes be turned in the lathe or faced in a machine when the holes are bored, and it is the duty of the reamer to true as well as smooth them in whatever direction they may be out of true or face one with the other until they are put together. Now, if they be put together a tight fit, the outside jaws are sprung open to some extent. Again, they may be sprung slightly atwist, and if the hole be reamed true and this twist taken out afterwards the hole will come atwist or out of fair in proportion as the jaws lose their twist from being fitted.

Again, reaming the hole slightly alters its axial line, and the radial faces, if at a right angle to the hole before reaming, will not be so after reaming, and it is not practicable to discover in just what direction and to what degree reaming the hole will alter its axial direction; hence, the single eye must be fitted as near as may be before the holes are reamed, and finished afterwards as described.

Let it be required to reduce by filing, the diameter of a round pin

or to file it to fit a taper hole, and the diameter of the pin being small it may be held by one end in the vice jaws or by means of the clamps, shown in Fig. 2091 or those in Fig. 2092. But the filing can be more truly and easily finished as in Fig. 2292, in which there is shown fastened in the vice a filing block having V-grooves (of varying width to suit varying diameters of work), in which the pin to be filed may be rested.

The pin is held by the hand vice shown, and is rotated towards the operator during the forward file stroke (one hand holding the hand vice and the other the file), and in the opposite direction during the back stroke. After every few file strokes the hand vice

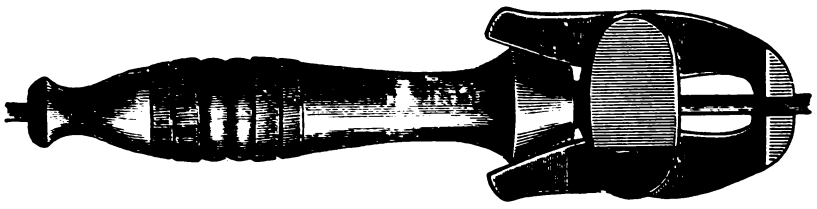

Fig. 2293.

is partly rotated in the hand so that the whole of the pin surface may be subjected to the file. The hand vice enables the pin to be forced into its hole and rotated, to show by the contact or bearing marks where it requires filing to adjust the fit.

Fig. 2293 represents an excellent form of hand vice for holding pins, &c., the jaws being pivoted to a cross piece and opened by a cone, the handle threading to the stem of the cross piece, and being hollow so that the work may pass through it. The work is thus very firmly gripped and not liable to move in the jaws as it is when the hand vice is fastened upon the work by a thumb nut.

Very thin pieces of metal cannot be well held in the vice jaws,

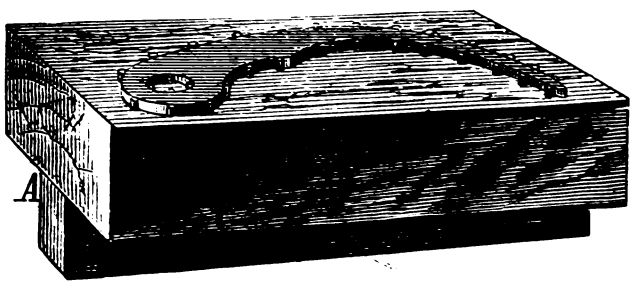

Fig. 2294.

and as an example of this kind of work holding, let it be required to file up a caliper leg, which being curved cannot well be held in any of the vice fixtures heretofore shown.

In Fig. 2294 there is a block of wood having an extension at A that may be gripped in the vice jaws. Upon the surface of the block the caliper leg is held by brads or nails driven around its edge, as shown, or it is obvious screws may be used.

An excellent example of filing is to file up a hexagon nut or a bolt head. This is apparently a simple piece of work, but it is in

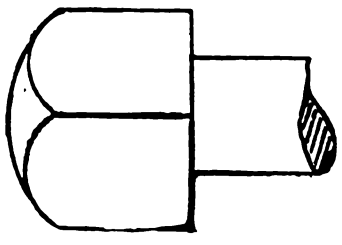

Fig. 2295.

fact a job that requires a good deal of care and precision to properly accomplish. The requirements are that the nut shall measure alike across the flats, that each flat shall be parallel to the axial line of the bolt, and at a proper and equal angle to both of its neighbors, and that the nut shall be of equal thickness all round. The method of accomplishing this result is as follows: Let Fig. 2295 represent a bolt head, after it has been turned in the lathe. It will be observed that the end face of the bolt head is rounded. Now a bolt head of this form gives a very neat appearance, but it presents difficulties in the filing up, as we shall see presently.

Suppose that one flat (which we will call flat A) of a nut, is nearest to the bore, then to make the nut of equal thickness all around, the other flats must be so filed down as to approach the

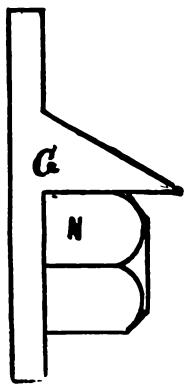

Fig. 2296.

bore as nearly as A does, and it is assumed that there is metal enough to permit this. The flat A will then be the first one to be filed up, taking off just sufficient to make it true when tested by the

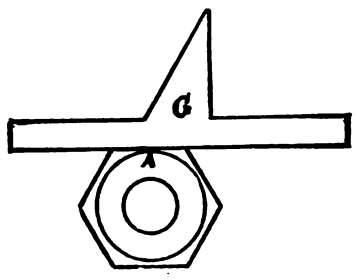

Fig. 2297.

nut gauge, applied as in Fig. 2296, in which N is the nut, and G the gauge. The flat must also be filed true when tested by the gauge, as in Figs. 2297 and 2298, the gauge G being tried rested on A and

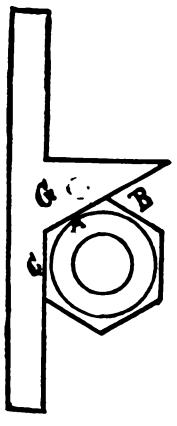

Fig. 2298.

applied to B, and then rested on A and applied to C. A should be filed so that, if possible, it will be at the proper angle to both B and C, but if, from errors in the angles of B and C, this is impossible,

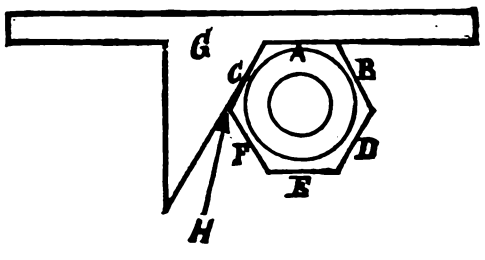

Fig. 2299.

the error should be divided between the two, as shown, for example, in Figs. 2299 and 2300, where the gauge is shown in the two positions necessary to test each respective flat, B and C; the amount of error being equal at H and I.

The next flat to file will be E, Fig. 2299. Now, in a small nut, the chamfer of the nut edge will be sufficient guide to the eye in filing E to an equal thickness (that is, equal for distance from the bore to A)

In order that the finished nut shall be so true that the nut gauge shall show that the flats or angles are true one with the other all around the nut, it is necessary that the flat E shall stand parallel to A; hence it should be made so by measurement with calipers, irrespective of its angle to either D or F. After E is filed it will serve as a base from which D and F may be filed to angle, while A will serve as a base from which the flats D and C may be filed to angle; but, while testing the angle with the gauge, C and D should

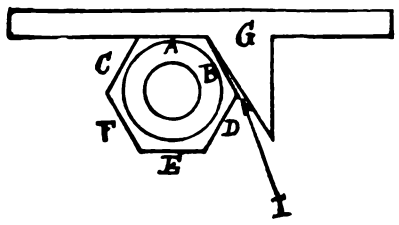

Fig. 2300.

be tried for parallelism, and F and B for parallelism, while the diameters across these flats should be equal on all sides.

If it were attempted to go all around the nut, filing to the gauge, as, for example, filing C, Fig. 2300, from A, F from C, E from F, D from E, and B from D, all the error in the angle of the gauge, or errors of workmanship, will (supposing the latter to be always in the same direction) be multiplied upon, or rather added to B when tested with A, and these two will not be of correct angle. Again, any error made upon one flat will be copied upon the one filed to gauge angle from it; whereas, filing E parallel to A insures the correctness of these two, and testing the parallelism of the others, as B, F, serves to discover and correct any error of angle that may exist. It is obvious that in filing each flat the gauge must be applied as in Fig. 2296, as well as in Fig. 2298.

In filing the opposite flats to diameter to fit the wrench or gauge, if one be used, it is best to leave them a tight fit until all are nearly finished, so that any error that may be discovered may be corrected while finishing them.

In small nuts, if two are to be filed, a better plan may be followed. The two nuts may be put upon a short piece of screw, as shown in

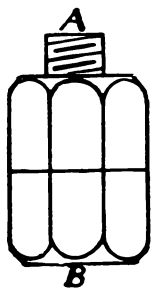

Fig. 2301.

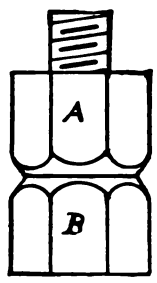

Fig. 2302.

Fig. 2301, and screwed firmly together. In doing this, however, it may be found that the nuts will not tighten against each other, with the flats fair one with the other. This, however, may be accomplished by winding around the piece of screw, and between the nuts, a piece of waste, twine, or rag, and then screwing them together until they bind sufficiently and the sides come fair; the nuts may then be put in the vice, the jaws of the latter meeting the end A of the screw and the face B of the nut in the figure. Select the thinnest flat on either of the two nuts, and file it and the one coincident to it, but on the other nut, at the same time taking care that both are filed equidistant from the screw. To test this, apply the gauge as shown in Fig. 2296. File these faces down a little above size, and then loose the nuts and put in an addition of waste or twine, so that the same faces shall not coincide, and the two filed faces will serve as guides, down to which their new contiguous faces may be filed, the hexagon gauge being applied as before. By adding waste or twine, this process may be repeated, the original, or first-filed faces serving as guides down to which to file all the others, which will insure equal thickness of all the flats. After roughing out all the flats in this manner, reverse the nuts on the screw, so that the two chamfered faces come together, as in Fig. 2302, and any want of truth in the parallelism of the flats one with the other, or with the axial line of the screw, will become at once apparent, and will be corrected in the finishing, providing that an equal amount be filed off the respective sides that are in the same plane as are A and B in the figure. Of course nuts filed in this way require the application of the calipers and gauges, the same as described for a single nut; but uniformity will be assured and the filing truer, because the filing in small nuts, as an inch or less, will be more true on account of there being a larger area for the file to rest and steady upon. It is obvious that a plain cylindrical piece, instead of a piece of screw, may be used, in which case the waste or twine will be unnecessary; but in this case the plug, or cylindrical piece, should be shorter than the length of the two nuts, and should not be so tight a fit to the bores as to damage the threads.

In small nuts it will not pay to chip off the surplus metal, because they cannot be held sufficiently firmly in the vice without suffering damage from the vice jaws, or even from copper clamps, while lead ones are too soft to hold them.

The finishing marks, if any, should be in a line with the bore of the nut, which gives the neatest appearance. The process is the

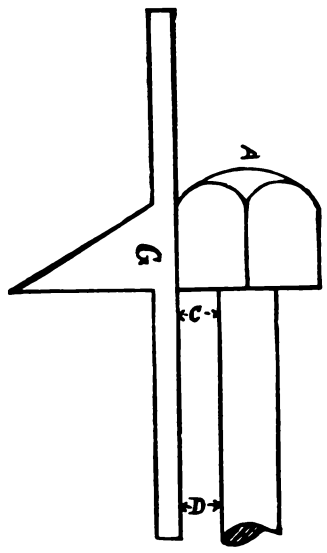

Fig. 2303.

same for a bolt head, such as shown in Fig. 2295, as for a single nut, with the exception that the gauge must be applied as in Fig 2303, when testing the truth of the flats with the axial line of the bolt, this being necessary because of the roundness of the end face A, in Fig. 2303. The distances D and C will be equal when the flat is true in that direction.

A pair of outside calipers form an excellent example in vice work. The material should be good cast steel of an even thickness, and therefore (unless for very large ones) saw blade will answer the purpose. It should be well softened by being made to a low red heat and buried in fine cinder ashes or lime, and allowed to cool there; the proper width of this piece of steel being sufficiently greater than the size of the caliper washer, to allow room for a chisel cut and leave a little to file off in truing up the joint. The length should be somewhat more than that required to make the legs, because a piece will be required to be cut off the narrow end to give substance enough for the points. The size of the washer should be drawn at each end of the steel, the centre of the washer should be centrepunch-marked, and a line should then be drawn to set off the two legs. The steel is then severed along this line, thus getting out the two rough legs. When shears are not at hand, or when it is not designed to use them for this purpose, three methods of dividing may be pursued: First, we may drill small holes along the line, and cut between the holes with a chisel. The objection to this is that the blade is sometimes very

hard to drill. Secondly, we may make centrepunch marks along the line, and then cut along the line with a chisel; and thirdly, we may drill a few holes at each end, and cut the middle with the centrepunch and chisel. The entire drilling is the safest, and the centrepunching the most hazardous, but it can be accomplished if the centrepunching is done lightly and gone over several times, with the chisel applied between the centrepunch marks, which will be much the quickest plan of the three.

The hole is next drilled for the rivet, care being taken to make it about $\frac{1}{32}$ inch smaller than the proper size, because the drill will not make a sufficiently true and parallel hole, and the latter must be reamed or trued out; and again because the legs have to go into the fire to be bent, and hence the holes may become damaged. There is another consideration, however, in determining the size to drill this hole, which is that the two legs require to be riveted together to bend them, and it is as well to drill the hole to suit the piece of metal intended to be used for this temporary rivet, which should be of brass or copper, so as to drive out easily after the bending is done. During the bending process the points should be thickened, care being taken not to twist them in the process. If the vice hand does the bending, the following instructions are pertinent: Heat the steel slowly and turn it over and over in the fire so that the points may not get burned before the wider parts are sufficiently heated. Let the fire be a clean one, that is, with no gaseous or blazing coal about it, or the coal will stick to the sides of the calipers, and they will get cool while being cleaned of adhering coal after being taken from the fire. Begin the bending from the thick end, carrying it forward by degrees. Strike light but rapidly succeeding blows, placing the steel upon the round point of the anvil.

The bending completed, and the points being thickened, the edges of the legs are trimmed upon an emery wheel or with a file, using the latter lengthwise of the edges if a new one, or crosswise if an old one. A full $\frac{1}{32}$ inch may be left to trim off after the calipers are put together. The temporary rivet may next be driven out, first, however, gripping the legs firmly and near to the rivet end with a hand vice, putting a piece of sheet brass between each jaw of the hand vice and the steel; otherwise the teeth of the latter will mark the steel, entailing a great deal of extra labor to file the marks out. The rivet hole is then reamed out to the required size, the two legs being held together by the hand vice to render the reaming more steady and true by making the hole longer when the two are together.

The next operation is to turn the rivet and washers. It is a very common practice to turn two separate washers and a rivet. On account, however, of the small amount of bearing in the washer holes, such washers are apt to rivet up out of fair one with the other, making an unsightly joint and causing them to be out of round when the edges of the joint are filed up. A better plan is to turn a pin and washer, taking care to make the diameters of the two exactly equal and the flat faces of each quite level. The pin should be turned about $\frac{1}{64}$ inch taper, the small end being made a neat fit to the holes in the caliper legs, and should be made of cast steel properly annealed. When finished, the head of the pin should be gripped by a pair of lead clamps in the vice, the end being left protruding so that the legs can be put upon it and revolved back and forth with a good supply of oil and under hard pressure, so that the pin will be forced a good and rather tight fit into the holes. This process will also smooth out the holes and condense the metal around both the holes and the pin. It is well to leave the pin to fit about one half as tight as the finished joint requires to be. The washer should be countersunk about three-quarters of the way through the hole, the latter being left a close working fit to the pin.

The legs should be rough filed, second-cut filed, and smooth filed before being draw-filed, care being used to keep the files clean, so as to avoid scratches. During this filing, however, the pin should be tried in the hole to see if the head comes fair down upon the face; thus the pin forms a guide and test in facing up the joint of the leg, and this is one of its advantages over the two-washer plan. After carefully draw-filing and polishing the sides of the legs the fitting of the joint is finished as follows: Place the two legs upon the pin in their proper position, and then put the washer into its place. Then behind the washer place another temporary one that will protrude beyond the end of the pin; then grip the whole tightly between a pair of lead clamps or pieces of thick leather in the vice; this will bring all parts of the joint home. Take hold of one leg in each hand and move them backward and forward as far as the vice will let them go, repeating the operation about a dozen times or more. This will mark the high spots upon the legs, which may then be taken apart again and have the bright parts removed by a scraper. It is also well to place the flat face of the washer upon a smooth file and rub it backward and forward under finger pressure, which will tend to correct any defect in its flatness. When the faces of the joint bear all over, it may be put together with oil and placed in the vice as before. Work it well back and forth, take it apart again and cut off the rivet to the required length, taking care very slightly to recess the end to assist the riveting. The whole joint should then be wiped quite clean, freely oiled, and put together ready to rivet. The head of the pin should be rested upon a block of lead, so that it will not get damaged. The riveting should be done with a small light ball-pened hammer, the blows being delivered very lightly and evenly all round the edge. As the riveting continues it is necessary to move the legs occasionally to see how the tightening proceeds, and when the legs are sufficiently tight, one of them may be gripped between pieces of leather in the vice, while the other is well worked and lubricated with oil. Then the riveted end should be filed off to very nearly its proper height and shape, and the joint well worked back and forth and round and round in the hand until it gets quite warm, when it may be cooled in water and tried for tightness. If too tight, it may be either worked until easy, or the riveted end of the pin may be tapped with a hammer to loosen it slightly. The riveting being completed, and the end filed smooth, the rounded part of the washer and the pin head should be draw-filed with a very fine file moved in varying directions, and then the polishing may be done with emery paper.

FITTING KEYS.—Keys that have been planed or milled will still require fitting with the file to insure that they bed properly. If the key to be fitted is taper and intended to fit top and bottom, the sides should first be filed true to a surface plate, and fitted into the keyway in the shaft, so that it can be slid up and down a good working fit. While fitting it, however, it is well to try it once or twice in the keyway in the wheel, as well as in the shaft, so as to see by the marks whether the keyways in the shaft and wheel require any fitting at all, either to make them quite square with the outside face, supposing it to be turned off, or to give them a good even bearing surface. The key being fitted sideways we must give the two keyseats a coating of red marking just sufficient to show that the surface is of a red tint, and then put the wheel in its place on the shaft. Then we bevel off the edges of the key at each end, leaving a chamfer of $\frac{1}{16}$ inch, and after facing off the top of the key with a bastard file, we place it in the keyway and tap it very lightly to a gentle bearing. After driving the key lightly home and taking it out again, we may file it on the top and bed it on the bottom, according to the indication of the marking, and re-insert it, tapping it up until it is home, top and bottom, without being a driven fit at all; on taking it out we file it according to the marks again, and if we continue this process until the key is a good fit, it will not spring the wheel the least out of true, no matter how tight, reasonably, it is finally driven. The key must never be driven in or out dry, for it will, in that case, inevitably cut during the first part of the operation; the marking put on the keyway is sufficient lubrication, but after two or three insertions the key also should be itself given a light coat, which will serve as lubrication, as well as denote the fit.

The bearing or contact marks upon a key driven home very lightly may show at one end or on one side only, while if the key was driven farther in those marks may show all over, making the key appear to fit much better than it actually does. This occurs from the elasticity and compression of the metal of the keyway and key, the metal giving most where the contact is hardest; from this it is apparent that a wheel truly bored and a good fit ma be set out of true by the key.

In Fig. 2304, for example, is a wheel hub W, assumed to be a good fit to the shaft S, while the key K fits at the end A only. If

the key be driven tightly home, the wheel will spring over, so that instead of the plane of its diameter standing at a right angle to the axial line of the shaft as at D in Fig. 2305, it will stand at an angle as at E, throwing the wheel out of true in that direction. This would occur not only on account of the elasticity and compression of the metal of the keyway, but also because the surface of the bore of the wheel and of the shaft is not, even under the best of turning, smooth enough to come into close contact all over, but are covered with slight projections or protuberances, which may occur in spirals because of the turning tool marks, or in localities because of differences in the texture of the metal. In driving the key home

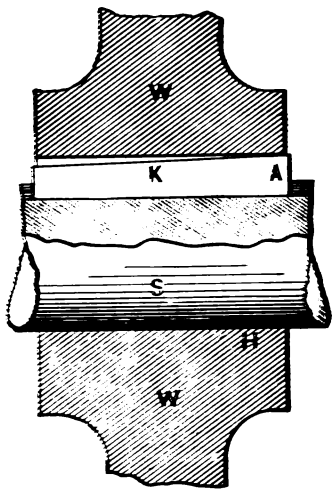

Fig. 2304.

these protuberances give way, and they do so most where the contact pressure is greatest, which would be at G in Fig. 2305, causing the wheel to cant over. If the wheel is not a good fit to the shaft it will not in this case touch the shaft at C, Fig. 2305.

Now suppose the key to bear at *a* and *b*, Fig. 2306, only, then the wheel would be thrown out of true in a direction at a right angle to the length of the key as denoted by the line E, which should stand as at D.

A properly bedded key binds the opposite half of the circumference of the wheel bore to the corresponding half circumference of the shaft; but if the key binds at one end only, as in Fig. 2304,

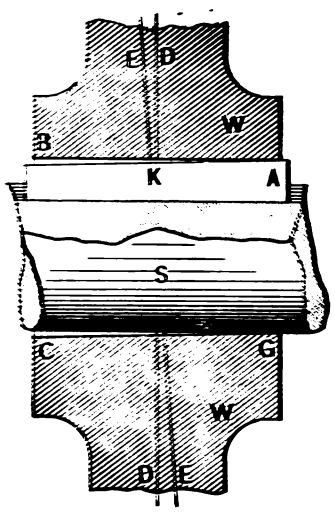

Fig. 2305.

the contact will be at the end H only; hence the surfaces will soon compress, on account of all the strain of the key falling on a small area, and the key will get loose.

It is obvious then that if a wheel has not been bored to run true the error may be to some extent corrected in fitting the key, but in this case the key must be driven well home, and the wheel rim tried for running true during the fitting process, the key being so bedded as to true the wheel as far as the elasticity and compression will permit; but a key thus bedded will not hold so firmly.

The distance a key of a certain length, breadth, and thickness, and of a given taper, will drive after being pushed home by hand or lightly tapped in with a hand hammer depends upon how closely it fits to its seat, and upon the elasticity of the metal, as well as upon the force with which it is driven. The workman usually, while fitting the key, drives it well home occasionally, to see how much of its length to allow for the final driving, and while doing so, if the key is a small one, a hand set chisel or a piece of copper should be interposed between the key head and the hammer (a blacksmith's set chisel is used for large keys) to prevent the hammer from damaging the key.

In fitting keys to old keyways the key is made too long, and cut off after being driven home. A long key is apt to bend in the driving, hence it is not unusual to support it by holding a second hammer beneath and against it to support it while being driven. In driving a key out, especially if it is fast home, a quick heavy blow is best, as it is less likely to burr, swell, or bulge the end of the key. But after the key has started lighter blows will answer.

To make a key for an old sunk keyway, it is as well to fit a piece of wood thereto as a guide in forging and fitting the key. If a *fast* running grindstone or emery wheel is at hand, many will forge the key a trifle large and then grind it as near as possible, and finish by filing. This, however, does not produce good work; it is better to plane the key all over, leaving a little in size for fitting. In preparing the piece of wood referred to, it should not in the fitting be driven or even forced in and out to try the fit, for the wood will compress

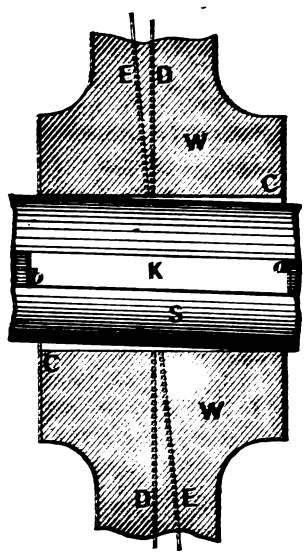

Fig. 2306.

and the marks mislead as to the actual fit. The proper way is to chalk the piece of wood and push it up the keyway just tightly home, then withdraw and fit it again.

In cases where the key is forged to very nearly the finished size, and is finished by the file, as sometimes occurs when away from the shop, it is best to forge the key with a gib head, as in Fig. 462, to assist in extracting it, especially when it is difficult to drive the key out from the back end, or when the keyway does not pass entirely through The key should be finished with a smooth file and with the file marks lengthways; it is, in fact, better to use a small smooth file and draw-file it, taking care to ease the high spots the most; and before driving it home both it and the keyway should be oiled.

If a keyway is to be cut by hand through a bore, as in a pulley or gear-wheel bore, its width should be marked with a T-square. If its width does not exceed $\frac{1}{2}$ inch a cape chisel a little less (say $\frac{1}{32}$ inch less) than the finished width of keyway should be used, which will leave a little metal for the sides to be filed true. If the keyway be an inch wide it is better to take a cape chisel about $\frac{1}{4}$ inch wide and cut a groove along each side of the keyway (keeping close to the marked line), and then cut out the middle with a flat chisel. The sides and bottom of the keyway should be surfaced true with the file.

If a keyway is to be cut in a shaft the cape chisel should be used in the same manner as above. But in both cases it is best, when filing, to occasionally ease out the corners with the edge of a half-round file, for reasons which will be explained presently.

In chipping a keyway in a bore the cut must not be carried

entirely through from one side, or the metal at the end of the cut will break out, and even in wrought iron this is apt to occur, so that it is necessary to cut the keyway from each end, or, at least, nick it in at one and cut it from the other end. In long keyways it is handiest to cut them half-way from each side, using, in the absence of anything better, a piece of planed wood and red marking or chalk to try the keyway with.

In cutting out through keyways by hand the location of the keyway is marked off by lines on both sides of the stub end of the rod, and then the mass of the metal is removed by drilling through as many holes as can be got in the size of keyway required, as shown in Fig. 2307, in which W is the work, B C D E the location of the keyway, and 1, 2, 3, 4 are the holes, taking care to have the drill rather smaller than the width of requisite keyway. The holes are drilled half-way through from each side, which is done to keep the keyway true; for if the drills were to run a little to one side, as they

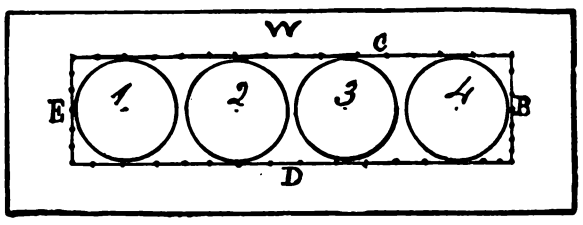

Fig. 2307.

are apt to do from a variety of causes, a great deal of work would be required to correct the error.

If the keyway is of sufficient dimensions to admit of the use of a chisel, the pieces left between the drilled holes are chipped out, and for this purpose a side chisel is found very useful, not only to nick the sides of the pieces left by the drilling, but also to take the finishing chipping cuts on the sides of the keyway. To cut out the square corners of the keyway, the diamond-point chisel shown in Fig. 2171 is employed.

If, however, the keyway is a very deep one, requiring long and slight chisels, the chipping process may be greatly reduced, or in fact entirely dispensed with, by plugging up the holes first drilled in the stub end by driving pieces of round iron tightly into them, and then drilling new holes, having their centres midway between the pieces so driven in, as at A in Fig. 2308. After the latter drilling, the remaining pieces of plugs are driven out, leaving the centre of the keyway cut clear through and the sides with a series of flutes in them, as shown at B, Fig. 2308 (in which 1 2 are the plugs and A is a centre for the new hole at that end), which should be filed away with a file as thick or strong as the clear space will allow. These

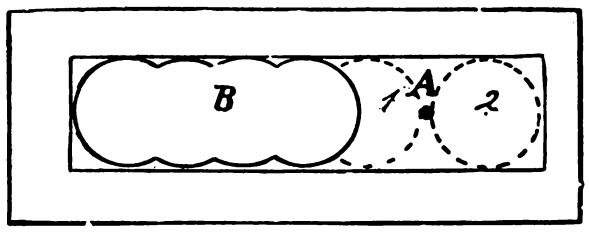

Fig. 2308.

plugs must be of the same metal as that in which the keyway is cut, otherwise the drill will be apt to run to one side.

To insure truth in the surfaces, a surface plate to test with is an absolute necessity, while to test the parallelism, a small sheet iron gauge is used, which gauge may afterwards be employed as a guide whereby to plane the thickness of the gib and key.

In cases where a slotting machine is at hand, it is sometimes the practice to cut out one end of the keyway to a sufficient length to admit a slotting tool, and then to slot out the remainder. This plan is often resorted to in getting out keyways of unusually large dimensions.

A much more usual method, however, is to employ slotting or keyway drills.

It is obvious that the ends of the keyways cut by drills are half round; hence, if square corners are required, they must be cut out square with the chisel shown in Fig. 2176, and afterwards filed out true. As a general rule, keyways cut with these drills require filing on the sides to get proper smoothness and bearing for the keys; and here it may be remarked that, in filing the corners of the keyway, a safe-edge file must be used, so that the two faces forming the corner will not be operated upon simultaneously, because that would require that the file be used in a straight line laterally as well as horizontally, and this is impracticable even in the hands of the most skilful.

Even the square file should have a safe edge upon it, and such an edge is usually produced by grinding the teeth off one face of the file. In selecting the face to have the teeth ground off, choose a face that is hollow in its length, or, if none of the faces is hollow, then select a face that is at a right angle to a good face of the file. It will be noted that with one safe edge only the square file will require turning over in order to operate upon both corners and maintain in each case a safe edge of the file against the flat sides of the keyway. For this reason many workmen select the two best parallel faces of the file and grind off the two other faces, giving to the file two safe edges, one opposite to the other. In this case either of the cutting faces of the file may be used upon the whole end face of the keyway operating close up to the corner, or if the file is much narrower than the keyway it may be used with a side sweep that will prevent the file from pinning, and produce much truer filing.

It is useless to attempt to cut out a square corner with a square file unless one edge of the latter is ground safe, because the teeth of

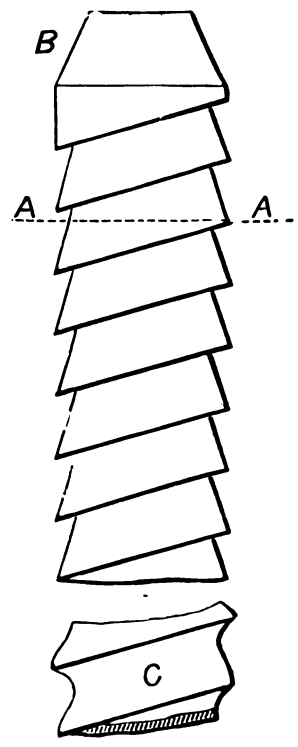

Fig. 2309.

the file itself do not form a square corner, and it is therefore only by grinding the teeth off one side that the points of the file teeth can be brought full up to a sharp angle. Here, however, it may be noted that even if the filing is performed with the best of safe-edge files, and as carefully as possible, it will still be necessary to square out the fine corners with the edge of a fine smooth half-round file.

If the edges of the keyways are rounding, as they are sometimes made where strength is required in the strap, it is better to take a file nearly or about $\frac{1}{8}$ inch larger in diameter than the width of the keyway, and grind two safe edges on it, otherwise the round file is very apt to go astray and cut the sides as well as the edge of the keyway.

An equaling file is much better for keyways than one actually parallel.

Another way employed to finish small keyways is by the aid of the tools shown in Figs. 2309 and 2310, which are termed drifts, because they are driven through with a hand hammer. That shown in Fig. 2309 is intended for holes having but little depth and not requiring to be very true, such, for instance, as those cut in the ends of keyways or bolts to receive cotters; the thickness at A A is made greater than at B C to give the cutting edge clearance.

The form shown in Fig. 2309 is for use by hand, the teeth being cut diagonally instead of across, as at A A, to preserve the strength.

This end may also be attained by making the serrations round at the bottom, as shown in the figure.

The slant of the teeth on one side of the drift should cross the slant of the teeth on the diametrally opposite side, because if the teeth on opposite sides were parallel one to the other the drift would have a tendency to move over to one side, and crowd there during the process of drifting.

In using these drifts the keyway should first be filed out to very nearly the finished size, leaving very little duty for the drift to perform, although the drift may be driven a short distance into the keyway occasionally during the filing, so as to show where filing is requisite. The work must lie flat and level upon a metal block, lead being preferable, and oil freely supplied to the drift. "If the hole is a deep one, and the cuttings clog in the teeth, or if the cut becomes too great (which may be detected by the drift making but little progress, or by the blows sounding solid) the drift must be driven out again, the cuttings removed, and the surplus metal, if any, removed by filing. The drift must again be freely oiled, and driven in as before, and the operation continued until the drift is driven through the keyway. After the drift has passed once through it should be reversed (or, if a square one, turned a quarter revolution) and again driven through, so that each side of the drift will have

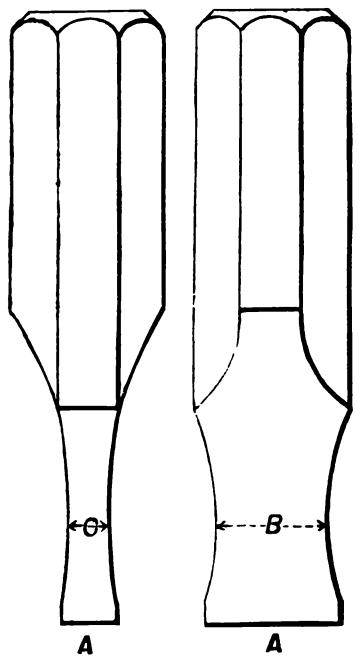

Fig. 2310.

cut on each side of the hole, which is done to correct any variation in the size of the drift" ("Complete Practical Machinist").

The great desideratum in using these drifts is to drive them true, and to strike fair blows, otherwise they will break. While the drift is first used, it should be examined for straightness at almost every blow; and if it requires drawing to one side, it should be done by altering the direction in which the hammer travels, and not by tilting the hammer face.

In Fig. 2311, suppose A to be a piece of wood and B and C drifts which have entered the keyways out of plumb, as shown by the dotted lines D and E. If, to right the drift C, it was struck by the hammer F in the position shown, and travelling in the direction denoted by G, the drift C would be almost sure to break; but if the drift B was struck by the hammer H, as shown, and travelling in the direction denoted by I, it would draw the drift B upright without breaking; or, in other words, the hammer face should always strike the head of the drift level and true with it, the drawing of the drift, if any is required, being done by the direction in which the hammer travels. When it is desired to cut a very smooth hole, two or more drifts should be used, each successive one being a trifle larger in diameter than its predecessor. Drifts slight in cross-section or slight in proportion to their lengths would be tempered evenly all over to a blue, while those of stout proportions would be tempered to a deep brown, bordering upon a bright purple.

For cutting out long narrow keyways, that are too narrow to admit of a machine cutting tool, and for very true holes, not to be cut out in quantities all of the same dimensions, it has no equal.

Hand drifts are sometimes used to cut keyways in small bores, as in small hubs, the method being shown in Fig. 2312, in which A represents a pulley with a keyway to be cut in the hub *b*; *c* is a plug, and *d* slips of iron placed between *c* and the drift *e* to press the latter to its cut. It is obvious that in this case the keyway in the pulley will be cut parallel, and the taper must be provided for in the key seat in the shaft. Keyways cut in this way are more true than those filed out. It is also obvious that the sides of the

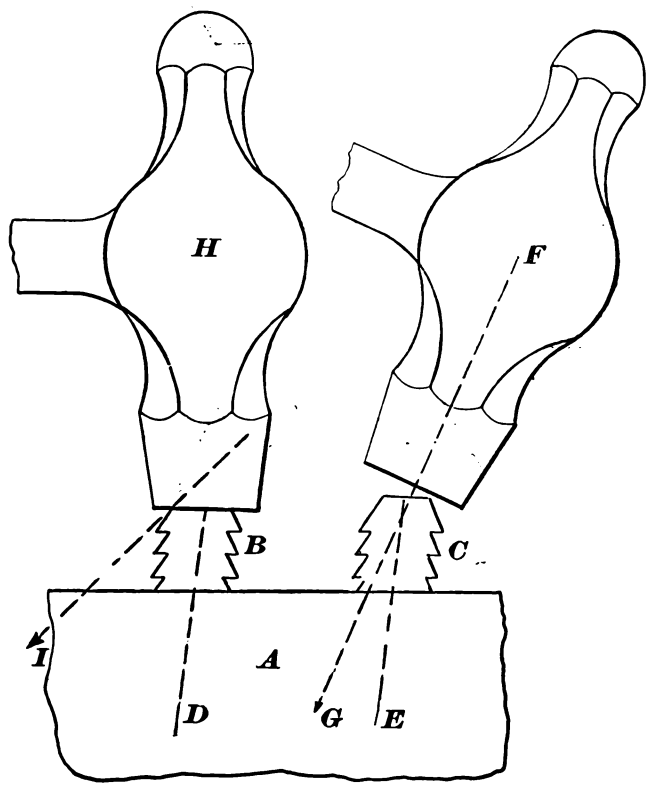

Fig. 2311.

keyway, as well as its depth, may be finished by a drift, and this is very desirable (on account of insuring parallelism) when the key is to act as a feather that is to have contact on the sides and not bind top and bottom.

The most improved form and method of using this class of tool, however, is as follows:—If a keyway is to be cut out of solid metal, holes are drilled as closely together as the length of the keyway will admit, their diameter nearly equaling the required width of keyway, after these holes are drilled through the metal remaining between them.

TEMPLATES.—Templates for vice work are used for two purposes: first to serve as guides in filing work to shape and size, and

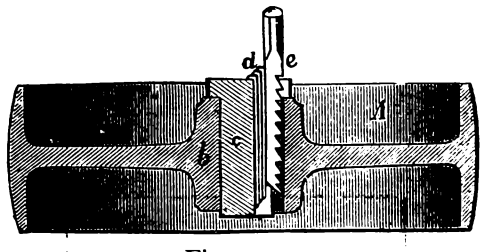

Fig. 2312.

secondly to test the finished work. When used as guides to file the work they are mainly used to work of irregular, curved, or angular form, to which the square and other ordinary vice tools cannot be applied.

Fig. 2313 represents a template for filing out a square hole. The edges A,B are at a right angle to each other, the wire simply serving as a handle.

There are two methods of applying this template; the first is to file out two opposite surfaces of the hole to the required diameter, making them true and parallel one to the other, and to then employ the template while filing out the remaining two sides; the

other is to file out one side and apply the template from that as a base for the other sides. The first is preferable because the liability to error is a minimum.

When work is to be from a template, the latter obviously becomes the original standard, and in many cases the best method of forming it so as to insure correctness and enable its proper application to the work is a matter of great consideration. The shape of the

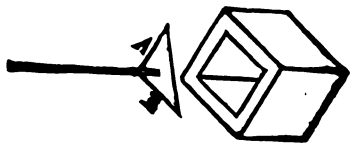

Fig. 2313.

template must, of course, be marked by lines which should be as fine and as deep as possible. But it does not matter how closely the template may be filed to these lines, it will still have some error, and this can in many cases be discovered and corrected during its application to the work. In the following examples there are principles which will be found of general application:—

Let it be required to make or test a piece of work such as in Fig. 2314, the teeth to be equally spaced, of the same angle, and of equal

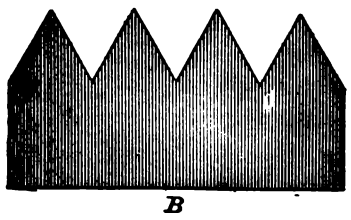

Fig. 2314.

height. A template must be made of one of the two forms shown in Fig. 2315. To begin with, take a piece of sheet metal equal in width to at least two teeth, and, assuming that the template is to have two teeth, file its sides P Q, in Fig. 2316, parallel, and make the width equal to twice the pitch of the teeth. We next divide its width into four equal parts by lines, and mark the height, as shown in Fig. 2316. If we desire to make the template such as at A, we cut out the shaded portion; or for the template at B, the shaded

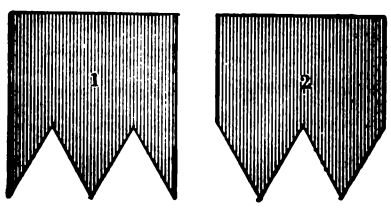

Fig. 2315.

portion. It will be observed, however, that in template A there are two corners C and D to be filed out, while at B there is but one E, the latter being the easier to make, since the corners are the most difficult to file and keep true. The best method of producing such a corner is to grind the teeth off the convex side and at the edge of a half-round file, producing a sharper corner than the teeth possess, while giving at the same time a safe edge on the rounded side that

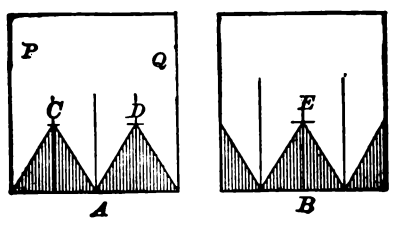

Fig. 2316.

will not cut one angle while the other is being filed. But when we come to apply these templates to the work, we shall find that A is the better of the two, because we can apply the square S, Fig. 2317, to the outside of the template, and also to the edge F of the work, which cannot be done to the edges G of the work and H of the template, because the template edge overhangs. We can, however, apply a square S′ to the other edge of B, but this is not so convenient unless the tops of the teeth are level.

Assuming, therefore, that the template A is the one to be made, we proceed to test its accuracy, bearing in mind that for this purpose the same method is to be employed whatever shape the

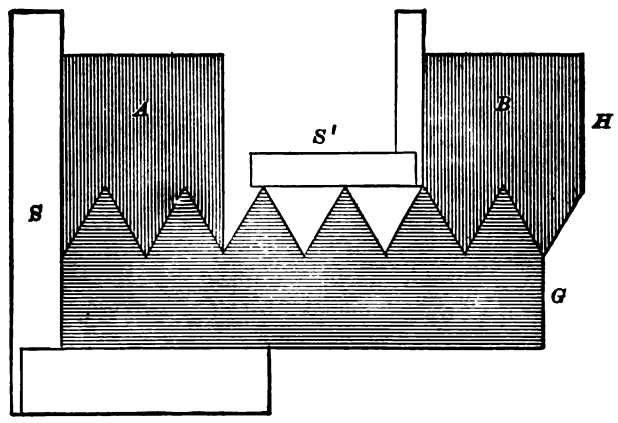

Fig. 2317.

template may be. Consequently, we make from the male template A, Fig. 2318, a female template K, beginning at one end of K and filing it to fit A until the edges of A and K are in line when tested by a straight-edge S. We then move the template A one tooth to

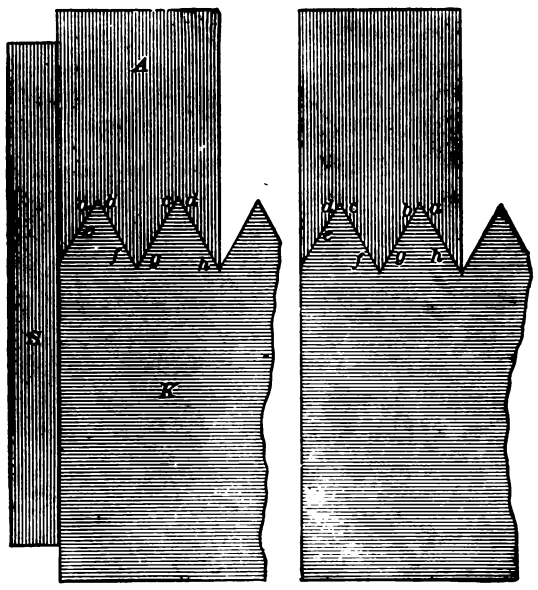

Fig. 2318.

the right, and file another tooth in K, and proceed in this way until a number of teeth have been made, applying a square as at S, Fig. 2319, to see that the template A is kept upright upon K. When K has been thus provided with several teeth that would fit A in any position in which the latter may be placed, we must turn template

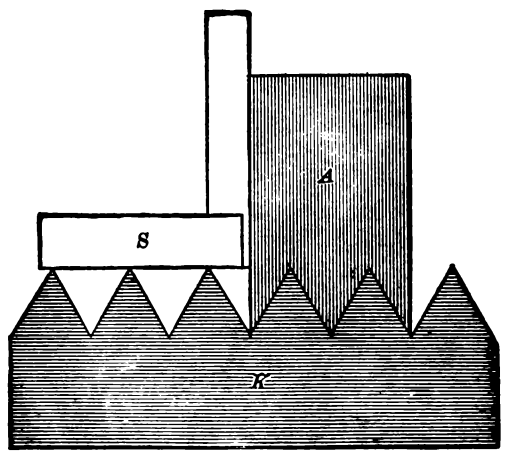

Fig. 2319.

A around upon K to test the equality of the angles. Thus, suppose at the first filing the edges *a*, *b*, *c*, *d*, upon A accurately fit the template K, and the straight-edge shows the edges fair; then if we simply turn the template A around, its angles, which were before on the right, will now be on the left, as is shown at the right of Fig. 2318.

Thus in one position *a* fits to *e*, in the other it fits to *h*, or *b* fits to *f*, and when turned around it fits to *g*, and so on. Supposing that when thus turned around the angles do not coincide, then half the error will be in the teeth of A and one-half in those of K, and the best plan will be to correct them on A to the necessary amount as near as judgment will dictate, and then to apply K as before, continuing this process until A will fit anywhere in K, and may be turned around without showing any error. But at each correction the straight-edge must be applied, and finally should be tried to

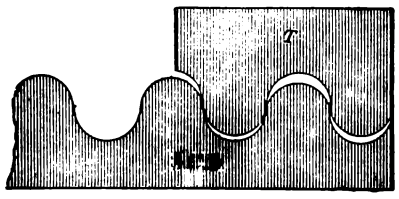

Fig. 2320.

prove if the teeth tops are level. We thus have two interchangeable templates, of which A may be used on the work and K kept to correct A when the latter becomes worn. It may be as well to add, however, that in first applying A to K it is best to press the straight-edge S against the edge of K, and hold it there, and then to place A against S, and slide it down into K.

Fig. 2320 represents an example in which, the form being a curve, it would be best to have the template touch more than two teeth, as shown in the cut. By letting the side A, Fig. 2321, of the

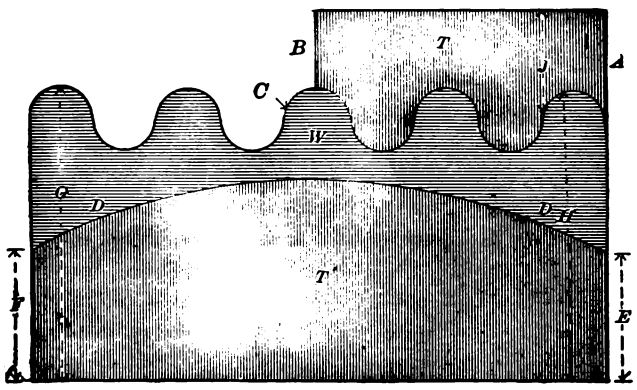

Fig. 2321.

template T terminate at the centre line of the two curves, and the end B terminate at the top of a curve, turning the template around would cause end A to envelop side C of the middle curve, thus increasing the scope of the template. Suppose, however, that the base curve D required to be true with the teeth, then a second template T′ must be used, its ends at E and F measuring an equal length or height, so that when they are placed even with the ends of the work, the distances G H being equal, the corrugations will be

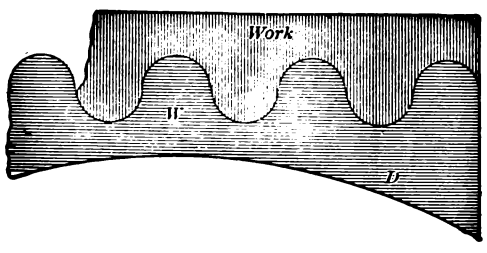

Fig. 2322.

true to the curve D D. Now let it be supposed that, instead of making a template to test a piece of work such as in Fig. 2321, it is required to make a template for use in making another piece of work that is to fit to piece W, then template T in Fig. 2321 will not answer, because it is a female template, whereas a male one is required, so that the edge of the template may coincide with that of the work. But we may convert T, Fig. 2321, into a male template by simply cutting off the edge A as far as the line J, and causing its right-hand edge to coincide with the edge of the work so that the latter, after being fitted to the template, may be turned upside down and fit upon the piece of work.

In Fig. 2323 is an example in which the forms of both sides of a piece require to be exactly alike, and the easiest method of accomplishing this is as follows :—The face A should first be made true,

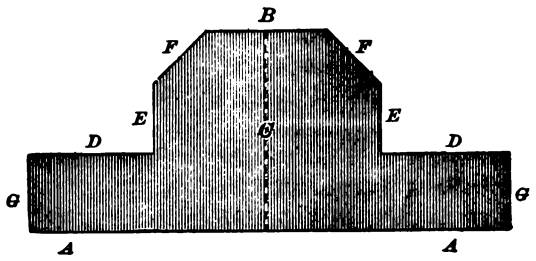

Fig. 2323.

and face B made parallel to A. A centre line C may then be drawn, and from it the lines E, E may be marked. The lines D are then drawn parallel to A A, lines E being made square to D and to A. The sides E may be calipered to width and parallelism, and all that will then remain is to file the angles F, F and the ends G, G to their

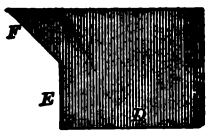

Fig. 2324.

required lengths. For F, F all that is necessary is a template formed as in Fig. 2324. The object of dressing the ends G, G last is that if they were finished before, their faces E would have to be made at exactly correct distances from them, which would render the job considerably more difficult.

Fig. 2325 represents a sketch for a piece of work whose two sides

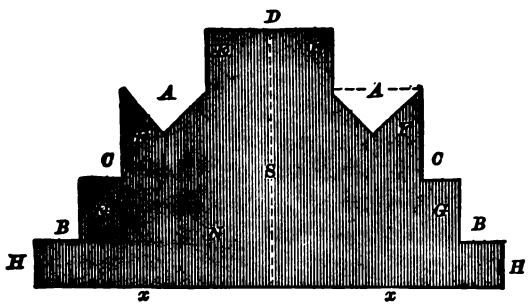

Fig. 2325.

are to be shaped exactly alike, requiring a template of the form of the work, as shown. From this a second template, Fig. 2326, is made, and to this latter the work may be filed. To make the template in Fig. 2325, which represents the work, the edge *x x* must be made straight, and the edge D parallel to it at the proper

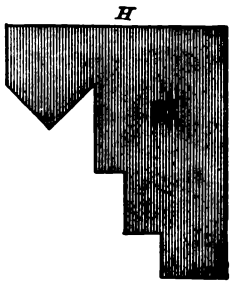

Fig. 2326.

height. A centre line S is then marked, and the edges at E may be filed equidistant from S and square to D; hence they will be parallel to each other. The side sections F should then be filed equidistant from S and parallel to each other. They should be the proper width apart and square to D, being tested in each of these

respects. The line joining E and F should be left full, as denoted by the dotted line at A on the right. The edges at C,C should then

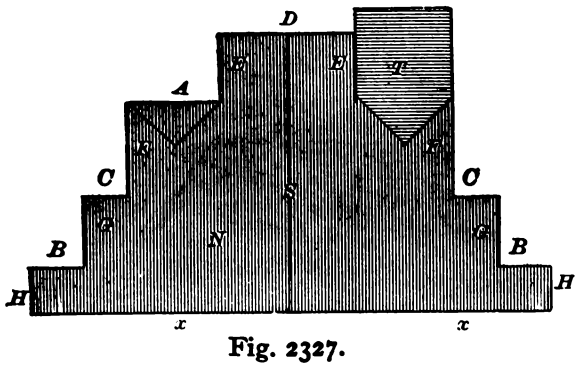

Fig. 2327.

be filed, calipering them from the edge $x\ x$. Edges G, G are obviously equidistant from S and parallel to S, or, what is the same thing, at a right angle to $x\ x$, from which they may therefore be tested with a square, and, finally, the edges B are made parallel to $x\ x$, and the ends H made square to x and equidistant from S. We have now to file the angular groove at A, and to get this true after marking its depth from the lines at A, we file it first to the lines as near as may be by the eye and very nearly to the full depth. We then make a small supplemental male template T, Fig. 2327, equal in width to the distance E F, or, in other words, to the width of the step at A, and having its edges quite parallel. Its end is then filed to fit the groove at A, when its edge meets and coincides with edge E, as in Fig. 2327, T representing the supplemental template. It is clear that when the V-groove A is so filed that T will fit it with either of its edges against E, the angles of the groove will be alike, and we may then make a male gauge, as in Fig. 2326, that may be used to mark or line out the wo k and to use as a template to file it to, its edge H being kept parallel to face D, Fig. 2325, of the work.

THERE are two principal kinds of connecting rods, first those in which the brasses fit in spaces provided in the solid rod, and which are known as solid-ended connecting rods, and second those in which the brasses fit in a strap secured by bolts or keys to the end of the rod. In Fig. 2328 is shown the simplest form of solid-end connecting rod. It consists of a rod enlarged at its end to receive a brass held up to the journal by a set-screw as shown, one-half the bore being provided in the rod and one-half in the brass. The objection to this kind of rod is that as the bore wears the rod gets shorter and no means is provided to restore its length, and that during the pulling stroke of the rod the whole of the strain is concentrated on the end area of the set-screw, and this causes it to imbed in the brass, giving play to the brass

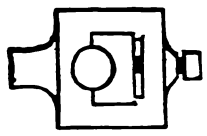

Fig. 2328.

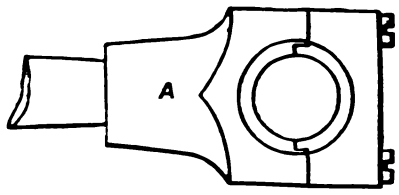

Fig. 2329.

unless frequent adjustment is made. It is, therefore, difficult to readily maintain a very accurate adjustment of fit with a simple set-screw of this kind. This may be to some extent remedied by the construction shown in Fig. 2329 in which the half brass A threads upon the stem of the rod, so that when it wears shorter to the amount of half the pitch of the thread upon the rod end, the brass may be unscrewed half a turn, and the original length will be restored. The cap is held on by two screws, which may have slotted heads as shown, or screws with check-nuts to prevent the screws from slackening back, as all screws are apt to do that receive alternating strains in reverse directions.

Yet another simple form of solid-end connecting rod is shown in Fig. 2330, there being two brasses with a key on one side and a set-screw on the other. In this case, as soon as either brass is moved by the key it can fit the rod at the top and at the bottom only; hence there is but little to hold the brasses sideways in the rod, and furthermore the brasses are damaged from the key and the set-screw acting directly upon them, as will be explained with reference to strap-ended rods. In Fig. 2333 is shown a very

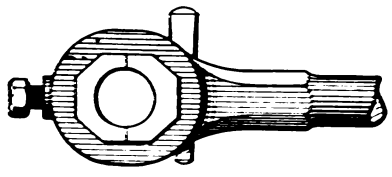

Fig. 2330.

substantial form of solid-ended rod, a sectional view being shown in Fig. 2331. The bottom or back brass A has a flange, as shown in Figs. 2331 and 2332 at A, which secures it to the rod end at the back. The top or key brass B has the keyway partly sunk in it, and the key binds against one side as well as on the bottom of the keyway, and this draws that brass close down to the face of the rod, as shown in Fig. 2331.

In this as in all other connecting rods in which one edge of the key beds against the back of the brass, the taper for the key should be cut in the rod so that the edge which meets the brass will stand square across the opening for the brass; in this way the back of the brass will also stand square across, which is easier to mark off and cut, plane, and fit. If the taper for the key is cut on the brass, marking the latter and fitting it become more difficult, as it must be put in and out of its place to fit and bed the taper for the key edge, whereas, in the other case, it can be squared with a square while planing and fitting. As the bore of connecting-rod brasses wears, and the lost motion incident thereto is taken up (by driving in the key) the location of the brasses in the rod end is altered, making the rod longer or shorter according to the location of the key. But when this wear has been sufficient to let the key pass through the rod, slips of iron termed liners are inserted between the backs or bedding faces of the brasses and the end of the rod or crown of the strap, as

Fig. 2331.

Fig. 2332.

the case may be. In putting in these liners the location of the brasses in the rod end may be adjusted so as to bring the brass back to its original position and restore the rod to its proper length, and in doing so the back brass, as distinguished from the key brass, is the one to be lined first.

In the rod ends shown in Figs. 2333 and 2334 the joint faces (that is the faces where the brasses meet) must be filed away to take up the wear, hence the rods get shorter. In Fig. 2333 the liner may be placed behind either brass, A or B, or behind both, the thickness of that behind A adjusting the length of the rod (which is always measured from centre to centre of the respective brass bores), while the thickness of that placed behind B would simply act to prevent the key from passing so far through the keyway. To prevent as far as possible the wear from altering the length of the rod, the key at one end of the rod is placed outside

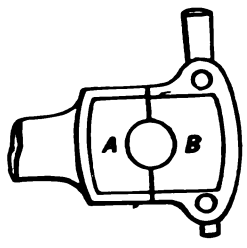

Fig. 2333.

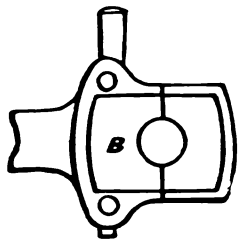

Fig. 2334.

the crank pin or at the outer end of the rod, as in Fig. 2333, while at the other end it is placed between the brasses and the stem of the rod, as in Fig. 2334. In this latter case the thickness of liner placed behind the key brass B (as the brass against which the key bears, or the brass next to the key, is always termed) would adjust the length of the rod, while the thickness of liner placed behind the back brass (as the other brass is termed) would be the one to adjust the distance the key would pass through the keyway.

In this form of rod end, as in many other solid-ended rods, the flange or collar of the crank pin, if solid with the pin, requires to pass through the opening in the rod end which receives the brasses. This may be accomplished by making that opening large or wide enough to pass over the crank-pin collar (which will increase the width of the brasses, and hence that of the rod end); or else the crank-pin collar may have two flat places filed on it, as in the end view shown in Fig. 2335. The objection to

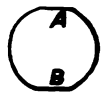

Fig. 2335.

this plan is that the rod can only be taken on and off in one position of the engine; that is, when the two flat places A and B, Fig. 2335, stand parallel with the length of the rod.

It will be noticed in Fig. 2331 that the brass B does not fill the space in the rod. This is because that brass has to pass in over crank-pin collar and push up into the journal after it is in the

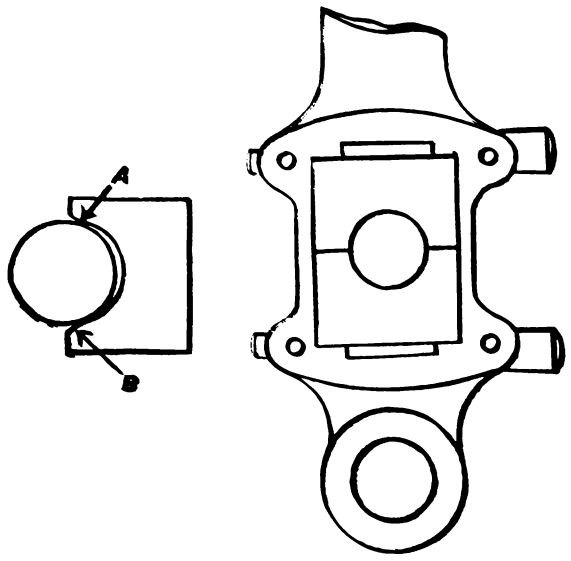

Fig. 2336.

rod. To make this space as small as possible, and to enable giving the crank pin as large a collar as possible, the key brass is sometimes beveled off, as shown in Fig. 2336 at A B. Another form of this rod end is shown in Fig. 2336, in which there are two keys to the brasses, the object being to adjust the keys to maintain the rod of its proper length. In order to facilitate making this adjustment, there should always be upon the face of

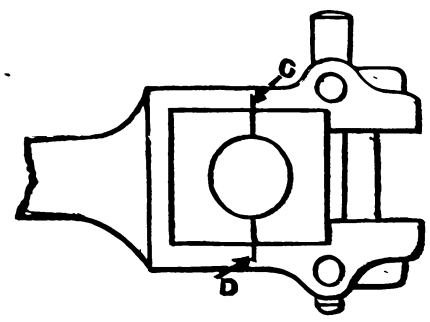

Fig. 2337.

the rod end centrepunch marks, as shown in Fig. 2338 at F and G, or else two deep marks, as shown at C D in Fig. 2337. Then, in lining up the brasses to set the key back, the rod may be restored to its original length by putting behind the back brass a piece of metal of such thickness as will bring the centre of the bore of the back brass B even with the centrepunch or other marks. This being the case, it does not matter about the exact thickness of

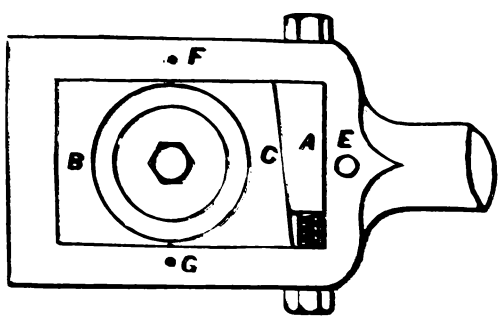

Fig. 2338.

the piece of metal put behind the other brass, since a variation in that will only act to let the key come more or less through the rod end without affecting the length of the rod. In Fig. 2337 is shown a form of rod end sometimes used. The end being open, the brasses pass through it. In this case the whole strain of the pull of the rod falls upon the edge of the gib at top and bottom of the strap, causing the gib to wear out very fast; furthermore, the back brass condenses the metal at the back of the brass opening, acting to pene it and throw the points of the rod end open, which it always does, the jaws of the gib imbedding in the jaws of the rod. This opening of the rod jaws makes the brasses loose in their places; hence this is a weak and undesirable form of rod end, though very convenient to take on and off. In Figs. 2338, 2339, 2340, and 2341 is shown a form of solid-ended rod of more modern construction. In this case a wedge A is used instead of a key, being adjusted by screws passing through the rod at the

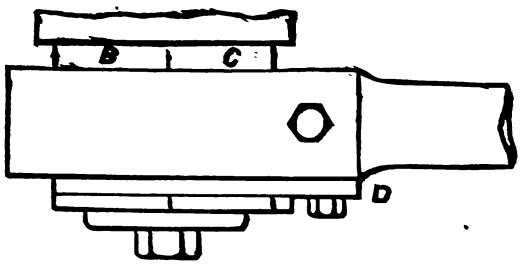

Fig. 2339.

top and bottom, it being obvious that the set-screws may have check-nuts added. B is the back brass, and C the key brass. In this case the flange of the brass goes next to the crank pin, and a plate D is provided to serve as a flange on the front face of the brass. In Fig. 2338 this plate is removed to show the wedge A; but it is shown in the plan view, 2339, and the end view, 2340, and by itself in Fig. 2341. A groove is cut on each side of the two brasses and the plate spans the brasses, passing up the groove being held in position by a screw at E. The opening for

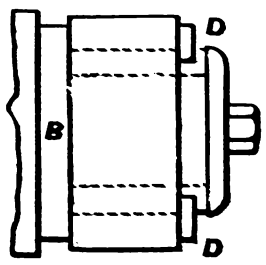

Fig. 2340.

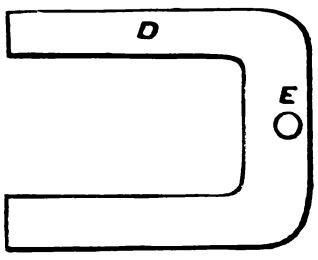

Fig. 2341.

the brass (in the rod end) is here shown wide enough for the rod end to pass over the collar of the crank pin, but in many cases, with this as well as with other forms of solid-ended rods, the crank pin may be made plain—that is, without a flange—and have a washer secured by a screw, so that by removing the washer the rod may be put on with the brasses already in place, and made no thicker (at the joint face) than is necessary for strength. In Fig. 2342 is shown what may be termed a clip-end connecting rod, the screw closing the rod end (to take up the wear) against

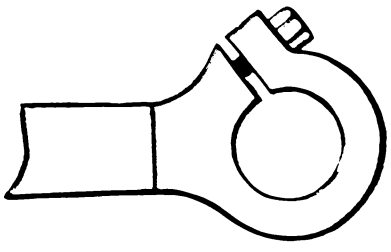

Fig. 2342.

the spring of the metal. It is obvious that in this case the hole may receive a brass bush split as is the rod end and secured from turning by a pin. Fig. 2343 presents another form of solid-end rod, which admits of the use of a brass having a flange on both sides of the strap, and will take on and off by removing the cap B. If the crank-pin collar is solid, the brasses must be placed on the crank pin, and the rod, with the wedge in place, lifted or lowered to the brasses; but if the crank pin has a washer and bolt, the rod may be put together and slipped on its place.

A compromise between the solid and the strap-rod end is shown in Fig. 2344, which represents a design used upon the fast engines of the Pennsylvania Railway. The piece A takes out to enable

putting on the rod or taking it off, A being secured in position by the bolt and nuts shown. This forms a solid and durable rod that is much less costly to make than strap-ended rods.

The simplest form of strap-ended connecting rod is that shown in Fig. 2345; S is the strap, secured to the rod end by the key D and

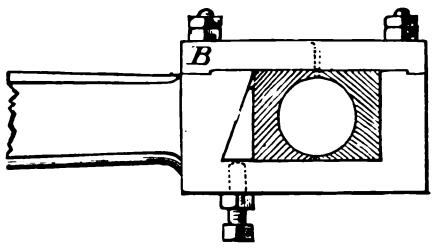

Fig. 2343.

gib C. A is the top, and B the bottom, or crown brass, and E the set-screw for securing the key in its place. [When the rod ends are forged in separate pieces, to be afterwards welded to the stem of the rod after the strap brasses are fitted up (which is done for convenience in handling them while fitting them up), they are termed stub ends.] This form of rod affords great

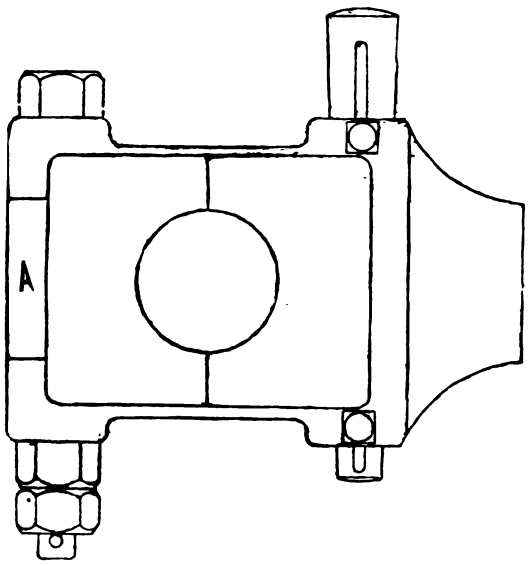

Fig. 2344.

facility for connection with the journals as the strap is easily removed. As the strap, however, is only secured to the rod by the gib and key, and as these have a small amount of area on the sides, it is not unusual to employ two gibs and one key, as in Fig. 2346, which holds the strap more securely, and more effectually prevents its movement sideways upon the rod end. In rods in which gibs

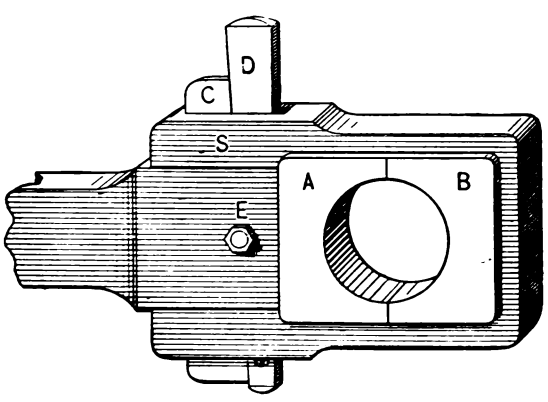

Fig. 2345.

and keys alone are used to hold the strap to the rod, the strap moves along the rod as the key passes farther through the strap, and the fit of the strap to the rod must be easy enough to permit of this motion; hence it cannot be locked to the rod. This, however, may be done by the employment of a bolt as well as a gib and key, as is shown in Fig. 2347. The edge of the gib here abuts against the back of the top brass, or key brass, as it is sometimes termed, which is objectionable, inasmuch as that it is apt to indent the brass, as shown in Fig. 2348 at B. This causes the bore to close at A, and causes the journal to heat, while it makes the brass fit loosely between the jaws of the strap, because it stretches the metal at the back of the brass, which has the same effect as pening it with the hammer.

In Fig. 2349 is shown an end of a connecting rod, such as is

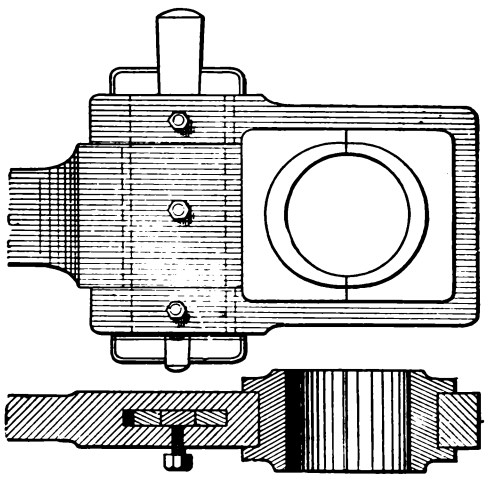

Fig. 2346.

employed on American locomotives, the use of a gib being dispensed with, and the strap being held by two bolts. To prevent the edge of the key from imbedding in the brass, a piece of hardened steel is sometimes placed between the key and the brass, as shown in the figure.

In some designs this method is reversed, the gib being prolonged in a screw-thread, as shown in Fig. 2350, and the key head is carried

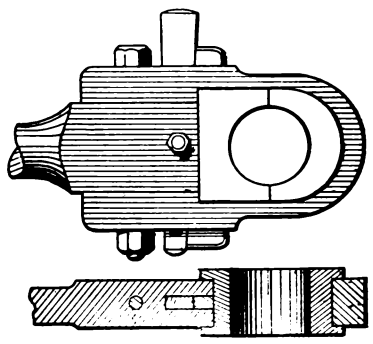

Fig. 2347.

over as shown. Two wing nuts are provided for adjusting the key, which enables its adjustment without the employment of a wrench or hammer.

To prevent the end of the set-screw from raising a burr on the key, which would prevent its easy motion through the keyway, a

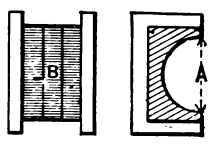

Fig. 2348.

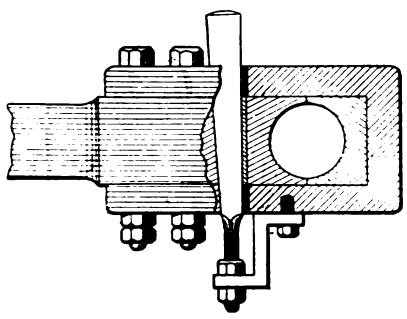

Fig. 2349.

shallow groove is sometimes cut along the key, as in Fig. 2351 at A, the end of the set-screw binding on the bottom of that groove.

In other forms of rod a gib and key are used as well as two bolts. This not only holds the strap very firmly, but it prevents to a certain extent the pening of the back of the brass, explained with reference to Fig. 2348. It is obvious that in the absence of a gib the key

moving under friction against the brass stretches the metal more than a gib that presses against the brass, but has no motion endways.

In Fig. 2352 the strap is held by bolts having nuts at each end, instead of a solid head at one end and nuts at the other. The

Fig. 2350.

Fig. 2351.

single nuts at the top serve to draw the bolts out when the rod is to be taken apart, thus saving the use of the hammer for that purpose.

In Fig. 2353 is shown a form of rod in which the strap is held by two dies A B, and a bolt which passes through the strap, the dies, and the rod end.

In Fig. 2354 is a form of rod end in which the strap ends are keyed against abutments on the rod by means of the key A. The

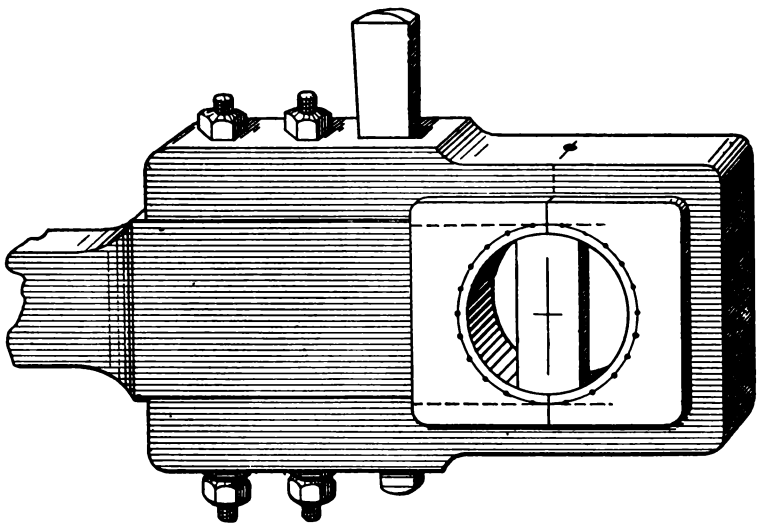

Fig. 2352.

abutments and strap ends being bevelled, keying up the strap with A closes it down upon the rod.

In Fig. 2355 is a form of rod end largely used upon marine engine work; A is the end of the rod, B, B the brasses, and D, D bolts passing through the brasses. Here we have no means of correcting the alteration of length due to the wear, unless a line is marked on

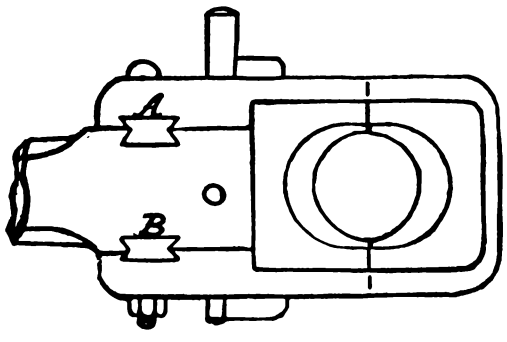

Fig. 2353.

the rod end, as at C, and the distance that line should stand from the centre of the brass bore is marked beside it, as is denoted by the figure in the cut, indicating that the line should stand 9 inches from the cuts of the brass bore.

In general practice the inside jaw faces of connecting rod straps and the faces of the rod are made parallel, which serves very well when the duty and wear is not great; but when the wear and tear is great, as in locomotive work, it is much better to make them taper; indeed, they are in any event better taper, because in that case the brasses can be made a tighter fit. The reason for making them parallel is because they can be more readily planed so than taper; but a parallel strap is more difficult to fit, and cannot be made so good a fit as a taper one, even when new, while it is very much more difficult and expensive to repair.

When the faces of the stub end (or, more properly speaking, of

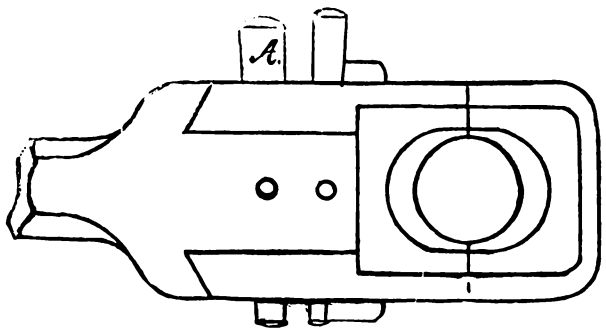

Fig. 2354.

the block) are parallel one to the other, and the inside faces of the strap are also parallel, the strap must be made a very easy fit to the block, in order to be an equal fit from end to end; for if the strap fits as tightly as it should to be a good job, it will, when put on the rod, spring open, fitting across A, Fig. 2356, only; this because the strap springs open from contact at A. The fit, then, can only be such as will not have force enough to spring the strap open, and

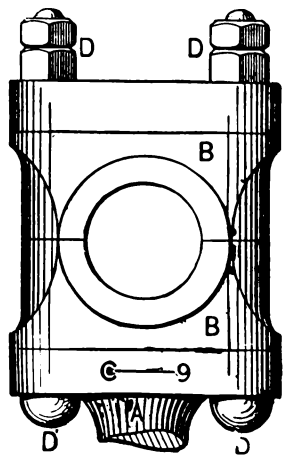

Fig. 2355.

this is very small indeed even in a very strong strap. It is within the mark to state that in a strap measuring 4 inches between jaws, at A in Fig. 2356, it can be forced by hand on the rod sufficiently tight to spring them open $\frac{1}{16}$th of an inch at B,B. When the brasses are fitted into the strap a second difficulty arises, inasmuch as they must be made a very easy fit, or else they will spring the strap open so that it will neither fit at A nor at B, whereas it is desirable that

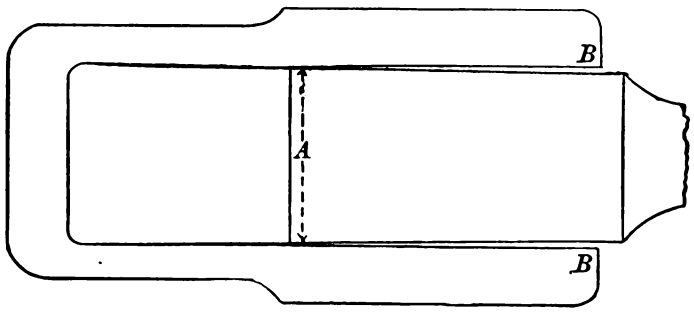

Fig. 2356.

the bottom brass drive home, and the top brass, or one nearest the rod, just push home by hand.

When the rod requires repairing a more serious difficulty arises. Suppose, for example, that the strap requires refitting to the rod, then it must evidently be closed between the jaws, especially if the rod end requires filing up, as it usually does. Now the jaws being parallel cannot be closed without being taken to the blacksmith shop and closed across the crown, as at A in Fig. 2357; for if the jaws are closed (as they might be) by pening the corners B,C the

jaws would close as denoted by the dotted lines. The brasses will have to be made larger than the diameter at D, in order to fill the space at A, and will be an easier fit as they pass from D to A, whereas the opposite should be the case. The strap must therefore be closed across A in the blacksmith's fire; this will scale the crown end and render it necessary to file down the whole of the surface on each of the side faces of the strap and rod in order to make them parallel, as they must be to have the flanges of the brasses fit when home in the strap.

The blacksmithing will in most cases render it necessary to file out the keyways, and this again entails the making of a new gib and key. All this extra work may be avoided by making the block and strap a little taper. But before proving this it may be noted that when the rod is made parallel the strap may be made to fit tightly by making the jaws taper, as shown by dotted lines in Fig. 2357;

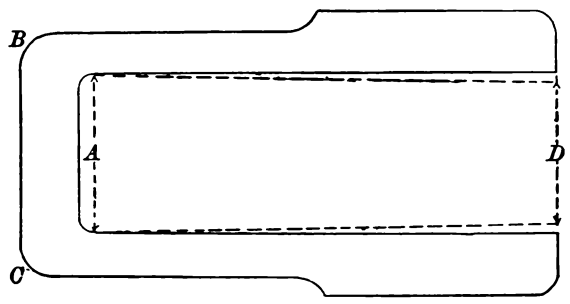

Fig. 2357.

so that when the strap is on the rod, and the jaws spring open by reason of the close fit, the fitting surfaces will be parallel. Such a construction would be faulty however, for the brasses would fit too tight when entering the strap, and get easier as they passed to their places, whereas, as already stated, the exact opposite should be the case.

Let us now observe the advantages of a strap, whose inside faces are made as in Fig. 2358; smaller at A than at B, and also at C than at D, while the thickness from A to B is greater than that from C to D, while the widths C D are less than the corresponding width of the rod.

First, as to fitting the strap to the rod. It may be made so tight to the rod that it will only just pass on when pushed by the hand.

Second, this will render possible a tighter fit than would be possible with a parallel strap and rod.

Third, the width B A being taper, the brasses may be easier

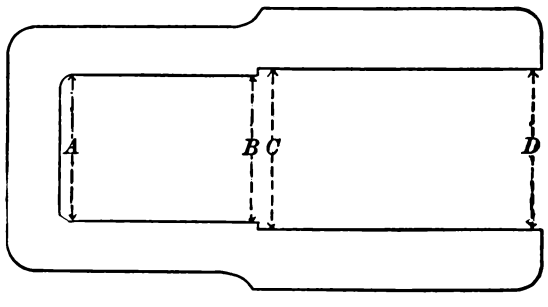

Fig. 2358.

made a good fit, because there will be some metal to fit on after they enter at B.

Fourth, the brasses may be made a tighter fit, the bottom brass being tight enough to spring the strap a trifle, easing but not destroying its fit on the rod.

Fifth, the top brass may be made a handsliding fit to the strap without springing the strap open, which being already under a tension because of the spring due to the bottom brass, will be more rigid and permit of a tighter degree of top brass fit, without springing open and away from the rod.

Sixth, this will leave the bottom brass a tight driving fit, and the top a hand sliding fit, which is desirable, because the top brass has to be taken out to get the rod off while the bottom brass remains in its place.

Seventh, what is of more consequence than all, the strap can be more easily and cheaply refitted to repair it. Thus, in Fig. 2359, suppose the strap to have been closed by pening at D; then whether the end D will be narrowed will depend on the amount the strap was closed, and the amount of taper it had before closing. Let us take, however, the most unfavorable conditions, and suppose that the amount of taper was so small, and the amount of closing by pening so great, that the jaws were made taper and smallest at D. Then the amount to be filed off to bring the width of jaw correct, and a fit to the strap, will be less than if the strap jaws were formed as in Fig. 2357, as will be seen by comparing Fig. 2357 with Fig. 2359, the amount to be filed away being that between the dotted and the full lines in both figures; the amount of closure being the same in the two figures.

But there is another great advantage, inasmuch as in pening, the strap may be pened and tried on the rod, the strap being pened and tried alternately until the required fit is obtained, which is not practicable with upsetting in the blacksmith's shop.

Again, the keyways in the strap will not be set out of true with those in the rod, as they are apt to be when upsetting is resorted to, nor will the strap be scaled; hence the side faces will require but little filing.

Furthermore the step may be located so as to come against the rod end when the wear has let the key down, and this will prevent the strap from passing too far upon the rod, and, therefore, tend to prevent the rod length from being improperly altered from errors in the thickness of the liners placed behind the brasses to take up the wear.

FITTING UP CONNECTING RODS.—The method of fitting up a connecting rod depends entirely upon its size. Very small rods to be made in numbers are usually got out by means of special devices

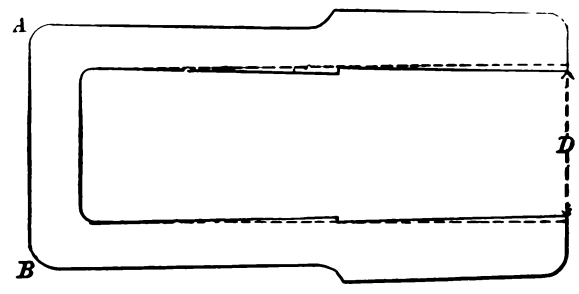

Fig. 2359.

which leave the fitter but little to do; indeed, sometimes the machine work is so accurately and finely fitted and finished as to finish the rod without the aid of the vice hand, save to put it into its place upon the engine or machine. As, however, the dimensions of the rod increase, this method of manipulation is in practice departed from, and the filing, fitting, and adjusting operations increase. In any event, however, the principles to be observed in the manipulation are the same, because the points to be observed in the fitting by hand work must be accomplished by the machine if the rods are to be finished by machine work.

Let Fig. 2360 represent a connecting rod; A representing the centre line in the side, and F the centre line in the edge view, and it is obvious that the axial lines, B and C, of the brass bores must stand at a right angle to line F, and be parallel to each other, because the journals on which they fit will do so. Furthermore, the faces of the brasses, as E, must stand their proper distance from the centre line F, this distance being at each end respectively half the whole width D, and the faces E must be in the same plane whatever their widths may be. The centre lines A and F are imaginary lines not worked to (except it be in marking or lining the rod out for the planing operations); but the method employed to fit up the rod must be such as will make all parts true to those lines if they were tested by them.

The process of fitting up a connecting rod may be tersely stated as follows: 1st, the rod is planed; 2nd, the straps are planed; 3rd, the straps are fitted to the rods; 4th, the straps are drilled and bolted to the rod; 5th, the keyways are cut, and the keys and gibs fitted; 6th, the side faces of the rod ends are again planed with the straps on; 7th, the brasses are fitted and the rods marked

off for length and the brasses bored; and, 8th, the file finishing and polishing done.

In the case of very large rods the two ends are made and fitted

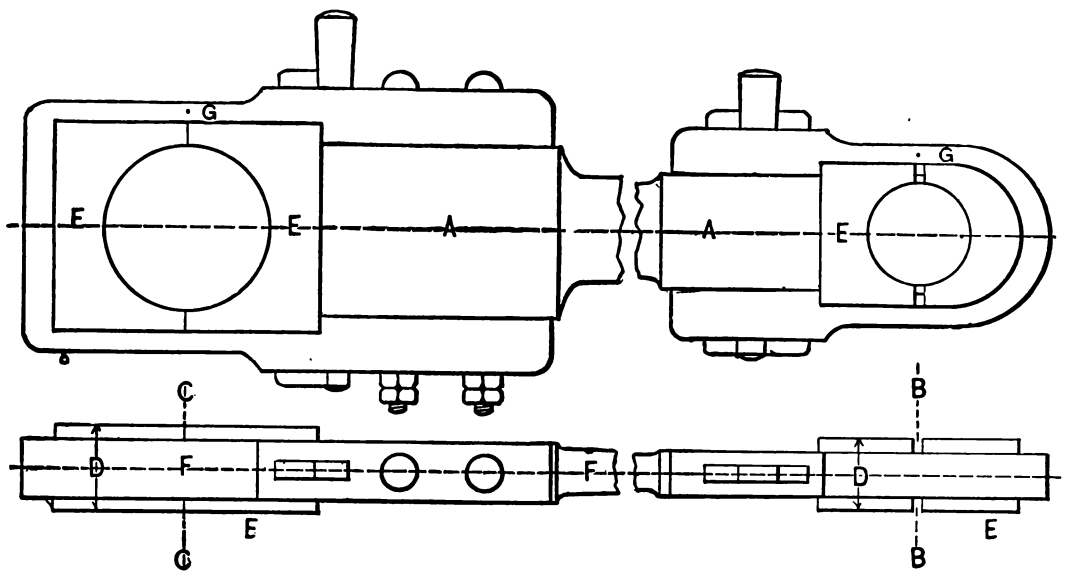

Fig. 2360.

up as separate pieces, and are afterwards welded to the body or stem of the rod, and the setting of the ends true one to the other after the welding affords such an excellent insight into the alignment of rods

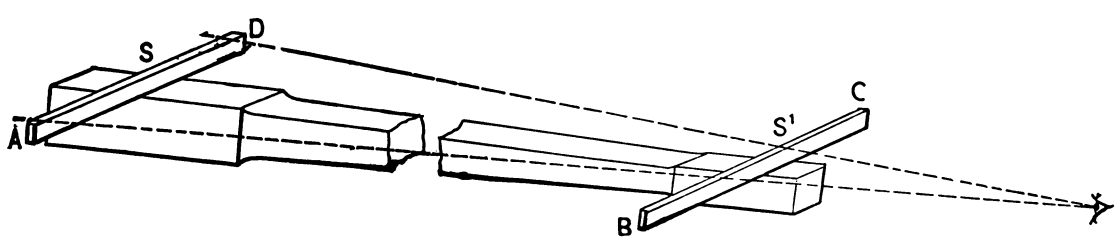

Fig. 2361.

that it may be well to describe it. First, then, the rod being laid on its side, two straight-edges, or rather winding strips, S and S', Fig.

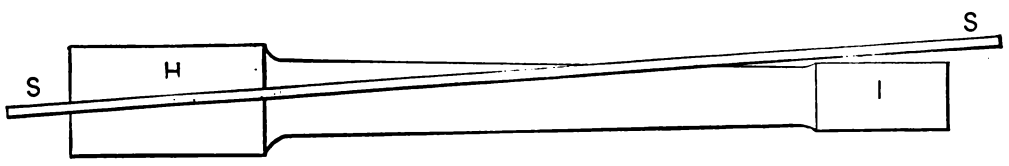

Fig. 2362.

2361, are placed on the side faces, and the rod will be set in this direction when their ends A,B,C,D,appear parallel when sighted by

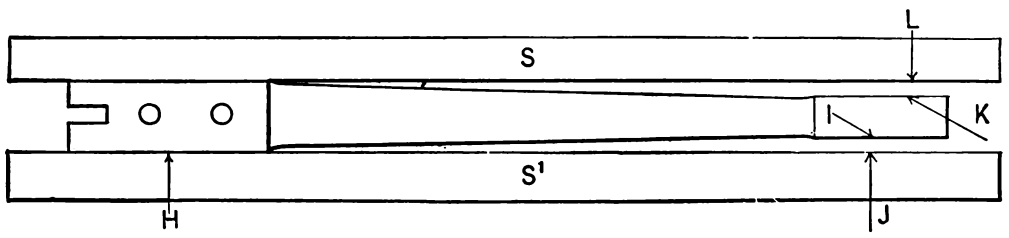

Fig. 2363.

the eye. If the winding strips are adjusted to stand straight across the rod, and, therefore, parallel one to the other, any twist or wind in the two rod faces will be very plainly discernible by the sighting

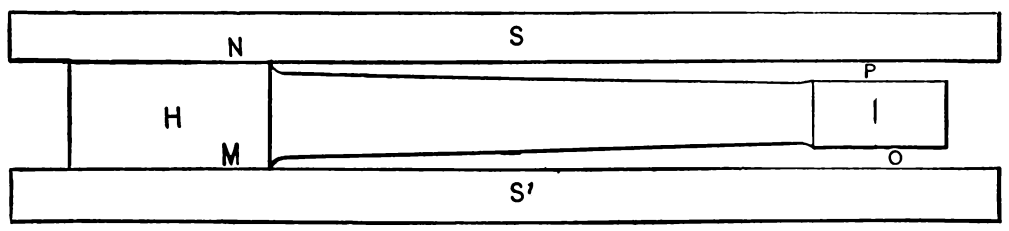

Fig. 2364.

process. The rod is then stood on edge, as in Fig. 2362, to test the alignment of the side faces. A straight-edge S is pressed firmly against one of the faces, as H in the figure, with the other end elevated as shown. The elevated end is then lowered, the motion serving to keep the end fairly bedded against face H. The distance, I J, Fig. 2363, is then measured. The straight-edge is then used in the same manner on the other side of the rod as at S in the figure, and the distance K L is measured, the setting in this direction being correct when distances I J and J K are equal. The straight-edge is then applied to the edge faces of end H of the rod, as in Fig. 2364, at M and at N, the distances O,P,are made equal. During these operations a straight-edge is applied along the body of the rod to see where to set it to effect any required adjustment, and if that body is straight the adjustment is made near the end at which the straight-edge is pressed to the rod.

The setting of the small end I is effected in the same manner, but the straight-edge will in this case fall over the face at the larger end, as is shown in Fig. 2365; hence, instead of measuring, lines as G and T are marked coincident with the edge of the

straight-edge and the distances T U, I G, are made equal. Winding strips are applied to the edge faces as well as to the side faces, and as making one adjustment or alignment may alter another, the whole process must be repeated until the whole of the tests prove the setting to be true.

Now suppose the rod to have been forged solid and all these faces to have been made true in the planing, and the first operation is to fit the straps to the rod ends. The strap should be put in place on the rod and moved laterally, when the centre of its motion where it moves the least will be the place where it binds and therefore requires filing. If its side faces come atwist with the side faces of the rod end, as shown in section in Fig. 2366, either the faces of the rod end or the inside faces of the jaw are out of square as denoted by the dotted lines. In any event the face E, Fig. 2367, of the rod end should be surfaced true and made at a right angle to the side face, and if to be made parallel to M, also at a right angle to K, a square and a surface plate

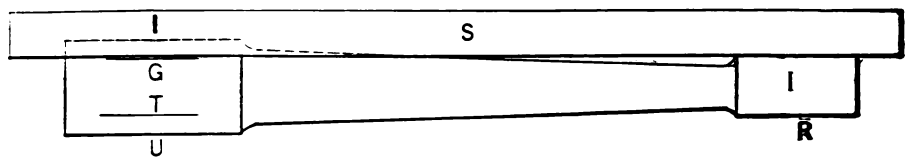

Fig. 2365.

Fig. 2366.

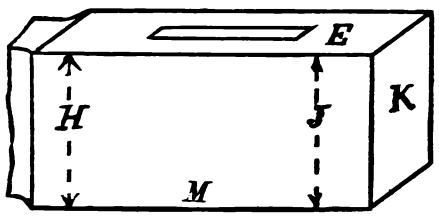

Fig. 2367.

are used to test them. If the diameter J is to be smaller than that at H, then the angle of both face E, and its opposite, should be equal with reference to K. These faces should be finished by draw-filing, with the file marks lengthwise of the rod. To fit the strap, proceed as follows: To find where it requires filing, place it on the rod (having previously put red marking on the rod end), and move it endwise and sideways, observing where the least motion takes place when the strap is

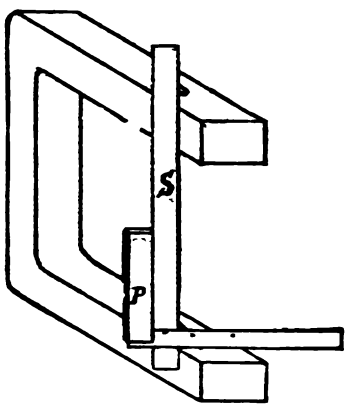

Fig. 2368.

moved sideways by pressing its crown end, for this point of least motion is always where it fits the tightest. To test the jaw faces for being square apply a straight-edge S, and a square P, Fig. 2368, pressing S against the strap, and P firmly against S.

When the strap shows to bed well on the rod and its motion is an ambling one (and not a pivoted one), it fits properly, and if both rod and strap have been filed square, their side faces will come fair or even. The keyways being drilled, may then if necessary be filed out, for which purpose it is necessary to bolt the strap to the rod, a process that requires very skilful treatment, because if the tightening of the bolts moves the strap on the rod, or if the strap be moved on the rod after the clamp is tightened, the keyways will not come fair when the clamp is taken off. In Fig. 2369 the strap is shown held to the rod by plates C and bolts B, the rod being shown in position ready to file out the keyway. It is better, however, to let the side face of the rod stand vertical as the strap will stand steadier that way. The strap should be set fair with the outside faces, which will bring the keyway fair if it is properly located. The bolt nuts should be tightened gradually, first one a little and then another, going over all four once or twice before they are fully tightened, and if the strap is not fair when they are all tight, all must be loosened before the strap is adjusted, or the clamp pressure will cause the strap jaws to spring out of true, and the keyways will not come fair when the clamp is removed.

Should the keyways not come fair when the strap sets fair on the rod the strap may be set to accommodate the keyways, and thus save filing, but this must be done before clamping it to the rod end. Care must, however, be taken to see if cutting the strap out to suit the keyway may not leave too little metal on one side of the keyway when the strap is subsequently planed.

The sides of the keyway should be filed true to a surface plate, using a well-bellied file and as stout a one as possible, so that it may not bend under the pressure, and file away the edges of the keyway.

The keyway should be made parallel to the side face of the strap, so that it may be fair with the centre line F in Fig. 2360. It should be made of equal width throughout, a piece of iron being used as a gauge in place of the key, and this same piece of sheet iron will serve as a gauge to plane the keys to thickness.

The corners of the keyway, if to be made square, should be

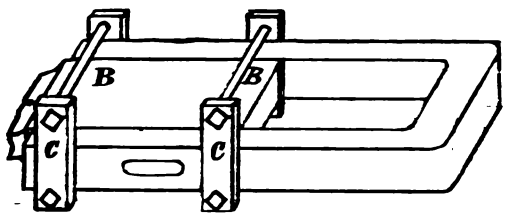

Fig. 2369.

filed out with the corner of a smooth half-round file, because the corners even of safe-edge files do not come up sharp enough.

For filing out the end faces of rectangular keyways, a square file with both edges safe must be used, the safe edges being on opposite sides of the file. For roughing out, a taper square, but for finishing, a parallel, or equalizing file is preferable.

The next operation is to fit the keys and gibs. The key should first be fitted and should be filed true to a surface plate, for in no other way can a really good reliable gib be obtained, no matter how well the keys may have been planed or milled. It should be filed a tight fit to the keyway so that it may be used (with a light coat of red marking) to show tight places in the keyway, driving the key in for that purpose from first one and then the other end of the keyway. If, however, it is driven too forcibly, it may seize or cut, and it will be difficult to get it out, besides damaging both it and the keyway. When the keys are reduced so that they will drive lightly into the keyway, they should be tried in the rod and in the strap separately, moving the key laterally or edgeways, so that it may mark any high places in the keyway of either of them.

The finished key and gib should be left tight enough, that they will hold themselves in any position in the keyway of the strap or of the rod when standing vertical.

The head of the gib should be chamfered as in Fig. 2370, so that it may be driven in and out to fit without raising burrs which would prevent it from passing into the keyway, and the key should be similarly chamfered and rounded in its width.

The width of the key and gib should be such as to just fill the keyways, leaving no draw when the key is down in the keyway so that its head is level with the head of the gib, as in Fig. 2371, A equaling the keyway width; and their edges should bed fairly one against the other, and against the edges of the keyway. The strap must then be keyed upon the rod, and the side faces of the rod and strap planed to thickness, placing a bolt and nut in the rod end in place of the brasses, so that the key may lock the strap and bind it in position. The rod end should be planed to thickness for the brasses and of equal thickness on each side of the keyway. The brasses should be planed after the rod end

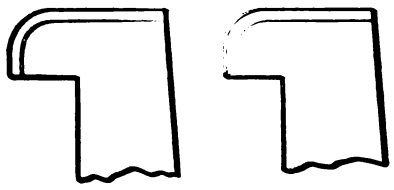

Fig. 2370.

is planed to thickness. The width for the brasses should be measured while the strap is on the rod end, because the width between the jaws of the strap is greater when the strap is in place on the rod end than when it is off, because in order to make the strap jaws a tight fit to the rod end it is made narrower between the jaws than the width of the rod end, so that the jaws spring open when the strap is pushed on the rod end. The sizes for the brasses to be planed to will then be the width of the strap across its edge face, and the width of the strap between the jaws *when it is on the rod*; and for these sizes a wire gauge should be made; or an adjustable gauge may of course be set.

The method to be pursued in planing the brasses is an important consideration. It is most convenient to plane both the brasses together, by which means much time is saved. To obtain this end the brasses are sometimes cast together, as in Fig. 2372, and after planing and before boring are cut in two at the narrow section A. In this case the brasses are cast sufficiently wide from crown to crown as denoted by B, to allow for the length

Fig. 2371.

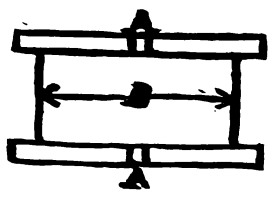

Fig. 2372.

cut away in separating them. In other practice the joint faces of the brasses are faced first and then soldered together for the planing; but very large brasses are planed separately. In either case the joint face of the brass should be made at a right angle to the faces of the brass that fit the strap.

The brasses should be fitted separately to the strap, and hence should, if joined, be separated, being cut in two in a shaper, if of the form shown in Fig. 2372, and split by driving a keen chisel between the corners of the joint faces, if the latter have been soldered. The back or crown brass, and not the key brass, should be fitted first. The corners of the ways, in the brass, for the strap should be eased just clear with the edge of a smooth half-round file, because otherwise they will rub down the sharp edges of the strap, and make the strap jaws appear to be a bad fit when on the rod. The brass should be driven in and out of the strap to fit, using a block of wood to strike on, otherwise the skin of the bore may become pened, and when the brasses are bored they will close in at the sides and become loose in the strap.

As a guide when fitting the bottom brass in the strap, place the strap on the rod as in Fig. 2373, and take the measure of the strap at A A, the strap overlapping the rod to admit the calipers or gauge. Each time the brass is driven in the strap to try the fit, the calipers so set should be tried in the strap (the brass being in the strap), as in the figure, and when the calipers very nearly touch the strap jaws, the strap with the back brass still in should be tried on the rod end, or in the case of a very heavy strap the caliper measurement

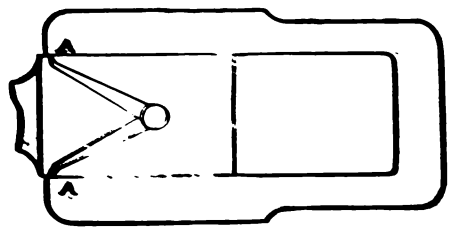

Fig. 2373.

minutely taken may be relied on to show that the brass does not spring the strap jaws too wide open. It is better, however, to leave the brasses a little too tight in the strap as they close slightly in the boring, becoming easier in the strap.

After the brass has been tried in the strap, and before it is filed again, it should be tried with a square, using a straight-edge also if the square back is too short to cross both faces of the brass. The method of testing is shown in Fig. 2374, in which B represents the brass, S the square, and T the straight-edge. The inside face of the flange should also be tried as in Fig. 2375, in which P represents the surface plate, S the square, and B the brass. This will

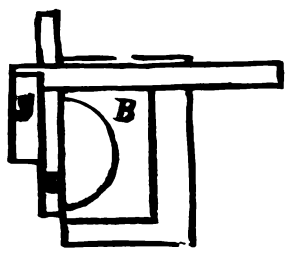

Fig. 2374.

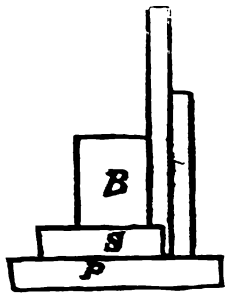

Fig. 2375.

insure that the brass face joint is square as it should be, and is further necessary because the bearing marks on the brass are not to be altogether relied upon.

In Fig. 2376, for example, the brass is shown in section in the strap, and the side A of the brass has a bearing against the jaw B of the strap, and hence would show marks of contact. The succeeding blows in driving the brass, however, may cause the brass to have contact on the side C with the jaw D; hence the bearing marks would show the brass to fit well when such was not the case. This may be detected by striking the brass on its joint face, and then measuring from E and from F to the end of the strap, and then striking the joint face at F and again measuring both distances, when any canting of the brass will readily be detected. It is better, however, to also apply the square, as shown in Figs. 2374 and 2375, because by this means the joint faces E F being parallel to the crown face G of the brass, the brass will be fitted so that when G meets the crown face H of the strap, the two will be parallel to each other and require but little filing to fit or bed together.

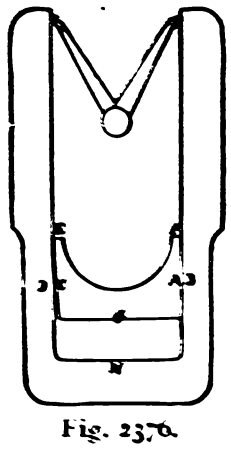

Fig. 2376.

The crown of the brass should be bedded very finely to the strap, or it will spring the strap jaws away from the rod when the key is driven home.

Suppose, for example, that the crown of the brass did not bed well at A in Fig. 2377, then keying up the strap would spring its

jaws away from the rod end, as shown at B C, the least error in the bedding having this effect notwithstanding the fit of the gib jaws.

The second brass must be made to just fit the strap when the back brass is in its place, and is small enough when the calipers, set as shown in Fig. 2373, and tried as shown in Fig. 2376, just

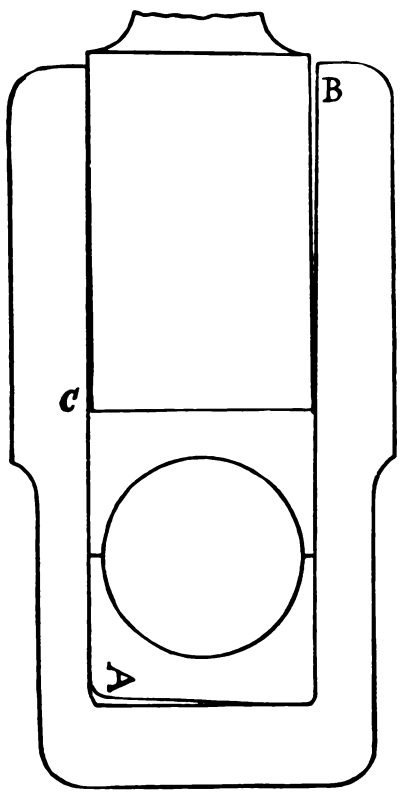

Fig. 2377.

fit the strap. This will insure that both brasses fit the strap when it is in its place on the rod.

When both pairs of brasses have been fitted to their straps, the latter should (if held by bolts) be bolted to their places on the rod, and the centre of the respective spaces for the brasses will be the location for the marks G,G, Fig. 2360. A pair of trammels should, however, be set to the proper length of the rod and these marks tested. If the strap is held by gibs and keys, as in the small end in Fig. 2360, the strap should be put on its place with the gibs in, and drawn up the rod by slowly forcing the key in until the mark G at that end stands in its proper distance from G at the other end, at which time the key should come through its proper distance.

The thickness of the brasses must be measured from these marks G,G to the crowns of the straps and the ends of the rod respectively. If the rod is of its proper length and the straps are in their proper positions, these marks will come in the centre of the space for the brasses. If, however, there is any error, as there is apt sometimes to be in very large rods, the course to be pursued depends upon the kind of rod end. If both straps are bolted to the rod end, the error may be divided equally at each end. If one end has a key and gib or gibs, but no bolt, as at the small end in Fig. 2360, the key brass may be made of such thickness as to butt against the end of the rod and meet the mark G.

For the large end, the thickness of the key brass, or, in other words, the distance D in Fig. 2378, must be taken after the face of the crown brass has been squared up, as described with reference to Figs. 2374 and 2375, the connecting rod strap being placed in such position that the key will be up in its proper place.

When the joint faces of brasses do not meet, but are left open to take up the wear, it is a difficult matter to properly adjust the brass bore to the journal. If the flanges of the brasses do not quite fit the length of the journal, as is very commonly the case, it is customary to tighten the key until the rod end can just be moved by hand so as to force the brass flanges against first one and then the other end of the journal. This is an approximate adjustment; and if the journal heats at all, the key is slacked back a trifle; whereas if it pounds, the key is set up a little. As a matter of fact, then, nothing is actually known of the precise fit of the brass to the journal; and while looseness may be detected by the pounding, the brass may be tight enough to cause undue wear without very sensibly heating the journal, especially if the latter is freely lubricated. If, however, the brasses fit the length of the journal, and do not butt, it is usual to drive the key in till the brasses bind the journal, and to then slack the key back to the necessary amount. What that amount should be cannot be stated, because it varies with the taper of the key and the force with which it is driven home. As a result, then, the operation is left to the judgment, or, in other words, to guess-work, of men, many of whom are not well experienced in the operation; while under any circumstances the actual fit is not positively known. A plan not infrequently adopted is to insert a piece of lead wire of small diameter between the brasses, the key is first driven tightly home, and then slacked back until the lead wire is just freed. It is estimated that the adjustment will then be correct; there is no actual certainty of the fit, however, even in this case.

Another objection is that the oil is apt to flow out of the opening, and the brass having communication with the oil cup is better lubricated than the other brass.

In cases where the brasses are difficult to get out of the strap, because of the location or of the size and weight of the parts, a piece of sheet brass is sometimes placed between the joint faces, and this piece is filed thinner to let the brasses together, the necessary thickness for the piece being ascertained by the lead wire process described. If the strap is held to the rod end by a gib and key only, and the joint faces are left open, there is nothing to lock the strap to the rod end save the jaws of the gib, whereas when the brasses butt, the key binds the brasses to the end face of the rod and the strap to the brasses, which if there is any wear sideways (as in locomotives), prevents the keys from wearing the sides of the keyways and the brass flanges from wearing the straps.

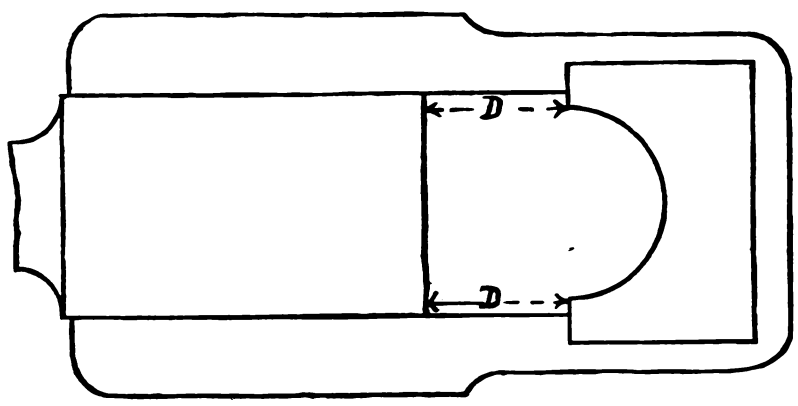

Fig. 2378.

A method of overcoming this defect is shown in Fig. 2379, where the joint faces are left open, and four set-screws S,S, two on each side of the rod, pass through the flange of one brass and abut against the face of the other, serving to adjust the fit of the brasses to the journal, and lock them in their adjusted position, locking at the same time the brasses to the strap and the strap to the rod end.

When the rods are finished so far as the fitting of its various

parts are concerned, the brasses should be marked so that the bore, when bored out, will leave an equal thickness of metal between the brass and the strap on each side of the bore, while the rod will be of proper length. To accomplish this, mark on the outside face of

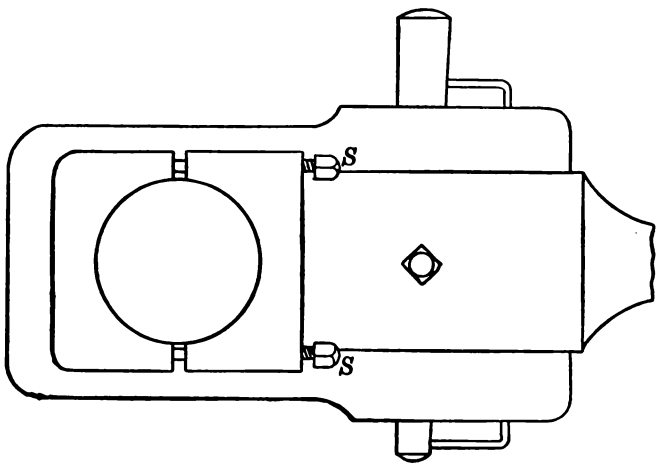

Fig. 2379.

the top brass two lines level with the faces which fit against the inside jaws of the strap, as shown in Fig. 2380, A,B being the lines referred to. We then key up the brasses in their places in the rod and fasten a centre piece in the brasses at each end of the rod. Upon these centre pieces we first mark a line parallel with and central

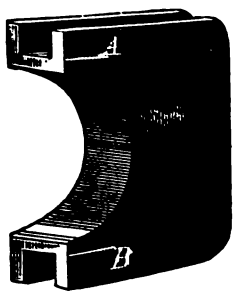

Fig. 2380.

between the lines A,B, and then a line across the joint of the brasses if the joint faces meet, and in the centre of the space between them if they do not meet.

Before applying the trammels to test the rod length, the latter should be stood or placed in the position in which it works when on the engine; for all rods deflect by their weight, the amount of such deflection depending upon the position in which the rod is suspended. The trammels also deflect, it is true, but their deflection is allowed for in setting them, whereas the deflection of the rod will not be accounted for unless it is trammelled when standing or lying in the position in which it works.

FITTING UP SOLID-ENDED CONNECTING RODS.—In fitting up solid-ended rods the side faces require to be filed up first and the jaws to receive the brasses next, taking care to file them out either square with the faces, or if slightly taper, as they should be, then each inside face should be an equal degree of taper to the side faces. This is necessary so that if the brasses are bored true to their own faces, the bore of the brasses at one end of the rod shall stand parallel to the bore of those at the other end.

The fitting of the keys and brasses is performed as described for strap-ended rods.

The reason that the jaws or box that receives the brasses is but a trifle taper is that in that case they are easier made a good fit, as they can be tried in their places while being fitted and before being reduced to the finished size, and furthermore because they can be put in and taken out easier.

FITTING UP A FORK-END CONNECTING ROD.—A fork-end connecting rod affords as good an example of vice work as can be

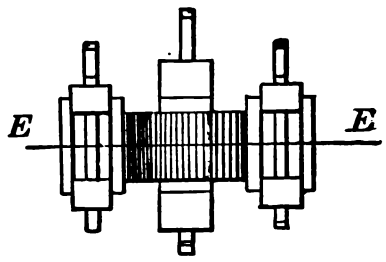

Fig. 2382.

found, because any faulty workmanship, either in the individual truth of the parts, or their relative truth one part to another, will make itself very plainly apparent.

Fig. 2381 represents a side and plan view of an ordinary form of fork-end rod, and the requirements are that the centre line A of the brass bores at the fork end shall be parallel with the centre line B of the bore at the butt end; that the side faces of all the brasses shall be parallel one to the other; that the side faces at the fork end shall be equidistant, or at the required distance, from the side faces at the butt end as denoted by C,D; that the bores of the brasses shall be at the proper distance apart to make the length of the rod come right; that the brasses at the fork end shall be the right distance apart, and that they shall stand parallel to each other, as well as to the bore at the butt end, as denoted by the line E in Fig. 2382.

If the rod were of a size that it could be conveniently handled and planed, if forged solid, the fitting up would be much simplified, because the setting of the rod for the machine operation would, to a great extent, insure truth in the relative alignment of the parts. Thus all the side faces of the rod ends could be planed at one chucking, in which case they would necessarily be parallel, and their proper relative distances apart, if the rod was properly marked out by lines and planed to the lines. The jaws or ways to receive

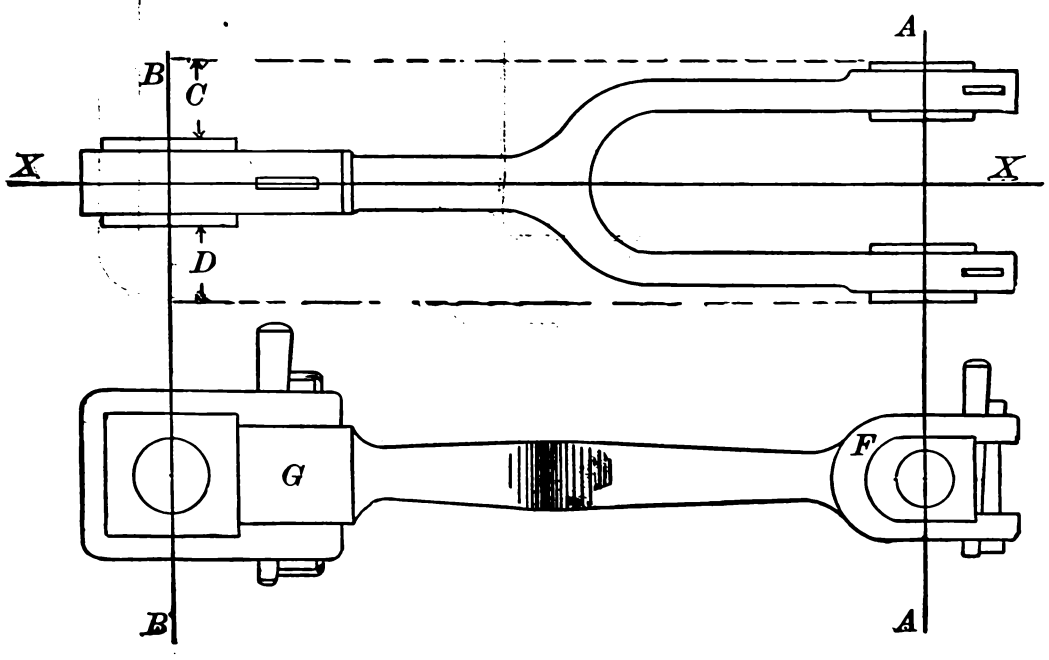

Fig. 2381.

the brasses would be slotted out together, and necessarily true, if the rod was chucked true on the machine table. But even in this case the rod has to be marked out by lines denoting where the

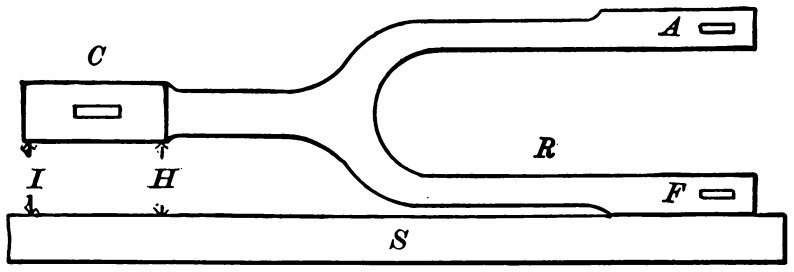

Fig. 2383.

metal is to be cut off to, and the principles involved in the lining are just the same as those involved in the fitting up.

If the rod be large, the ends may be, and usually are, forged and fitted up separately, and subsequently welded to the body of the

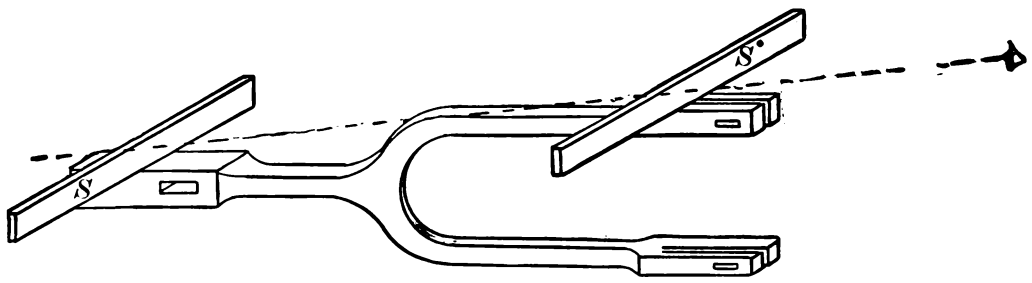

Fig. 2384.

rod, which has been forged separately. In this case, the alignment of the parts is a part of the process in welding the rod, and setting it after welding. All the principles involved in making the rod ends separate, and afterwards welding them, or in marking out a small and complete forged rod, are, however, involved in the process of refitting an old rod in the jaws, and putting in new brasses; hence a description of that process will cover the whole ground. The first thing to do is to file up the side faces, as F,G, Fig. 2381, and, in doing this, all that is necessary is to file F up true, when tested by a straight-edge applied as in Fig. 2383, in which R is the fork and S a straight-edge, whose edge should measure the same distance at H as it does at I from the side face F, while the face C

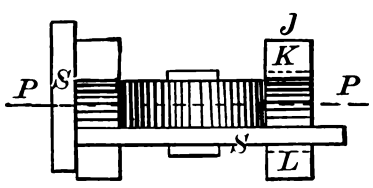

Fig. 2385

measures the same distance from face A of the other fork end, or from the imaginary centre line X, Fig. 2381. Then turning the rod on its side, a straight-edge should be placed across the face F, and one across the face G, as in Fig. 2384, at S and S'; and the edges of the two straight-edges should stand parallel, when

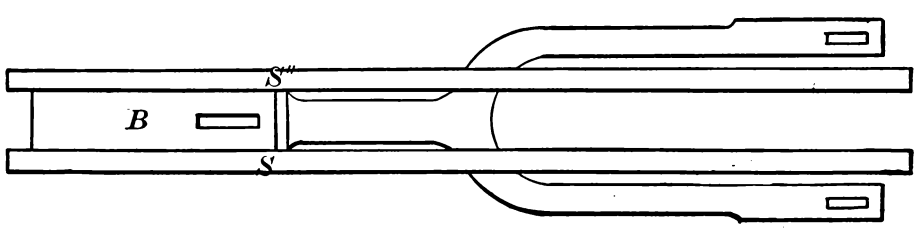

Fig. 2386.

sighted in such a position that the edges are very nearly in line with the eye, as shown in the figure.

The inside faces of the fork jaws may be filed to measurement from the outside ones.

The ways for the brasses should be filed square with the outside faces, as shown in Fig. 2385, in which S is a T-square; but if one jaw is wider than the other, as sometimes occurs, it will not matter, providing that, with the square applied, resting against the side and the face of the ways on the narrow jaw, the ways of the other jaw are equidistant from the square blade, as would be the case; for example, if the width of the ways of the jaw J extended to the dotted lines at K, L, because the line P would still form the centre line of both jaws, standing at a right angle to the side faces of the fork end, and parallel to the bore of the brasses at the butt end. Before filing up the side faces at the butt end, the strap should be fitted on and keyed up, so that its side faces may be filed

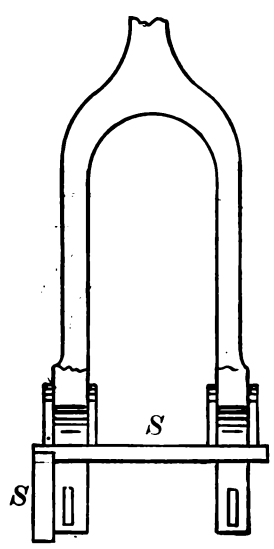

Fig. 2387.

up with those on the rod. To test the truth of the side faces at the butt end, a straight-edge should be applied, as at S and S'', Fig. 2386, being pressed firmly to the side faces at the butt B, the fork faces being measured from the edge of the straight-edge at that end, and also with straight-edges, as in Fig. 2384. The brasses, after being fitted into the ways of the jaws, should have their joint faces squared, as in Fig. 2387, the top of each jaw being shown broken away, so as to fully expose the brasses. S is a square held firmly against the side face of a jaw, the brasses having their joint faces true with the square blade, and true also when tested with a

square, applied as in Fig. 2388, in which B is the brass and S the square. The brasses at the other end should be filed true to the side faces of the strap in a similar manner, and, the fitting being completed, it simply remains to mark off the brasses for boring. The joint faces of the brasses should form the centre of their respective bores; hence, all that is necessary, is to insure that the brasses be of equal thickness, top and bottom, and this may be accomplished as follows: Mark across each face a line even with the ways of the brass, as shown in Fig. 2389, at A, C, and carry these lines around the side face, as shown in the figure at B, D. Place the brasses in the strap, put in a piece of wood whereon the compasses may be rested, as shown in Fig. 2390, which represents one jaw, and mark on this piece of wood a line even with the joint faces of the brasses, and on this line a centre-punch dot equidistant between the lines B D. From this dot, as a centre, strike the circle

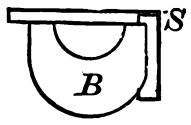

Fig. 2388.

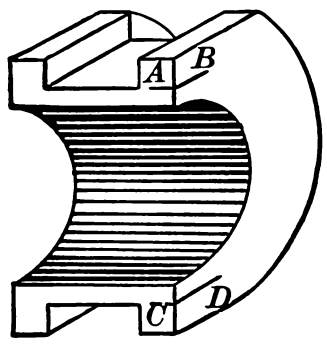

Fig. 2389.

shown, and define it by centre-punch dots, and if the lathe-hand chucks the brasses true to the ways that fit the rod jaws, and to the dotted circle, the bores will stand true in every respect.

REPAIRING CONNECTING RODS.—In repairing connecting rods the following is the work usually required to be done, and in

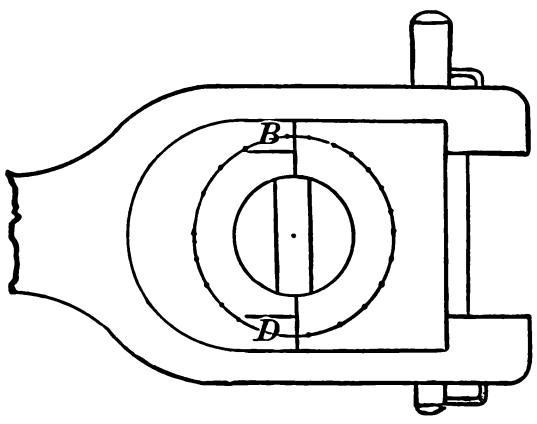

Fig. 2390.

the order named: Refitting straps, refitting gibs, and perhaps new gibs and keys, filing up the side faces of rod ends and straps, lining up brasses to make them fit the strap, lining up the rod to length and fitting the brasses together so as to fit their journals.

If the strap is taper and can be closed by pening, the outside of

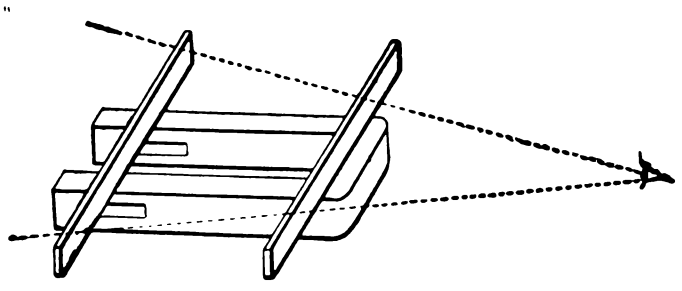
Fig. 2391.

the back should be pened; but if the strap requires closing in the blacksmith's shop, then it should be tested by winding strips as shown in Fig. 2391, to insure that the faces are true, and thus save filing at the keyways and on the side faces to make them come fair with the rod ends. The rod ends should then be filed up and the straps fitted on.

Next comes putting in the new key and gib, or refitting the old gib. If the jaw of the gib has cut into the strap, as it will do in some cases (especially in marine and locomotive rods), this may

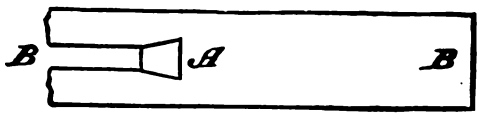

Fig. 2392.

be repaired as follows: Cut out the recess shown in Fig. 2392 at A, making it dovetail-shaped as shown, and with a set chisel set up its sides as shown in Fig. 2393, which is a sectional side elevation through the line of B. Cut out a piece of wrought iron and

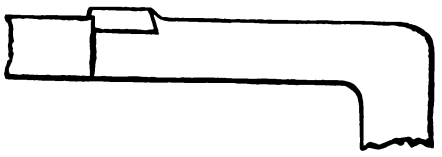
Fig. 2393.

bevel its edges as shown in Fig. 2394, filing it to fit into the recess cut at A, Fig. 2392, and letting the bevelled edge be uppermost. Then take a set chisel and close down again upon the bevelled edge of the piece the metal that was set up, as shown in Fig. 2393, and the piece will be riveted, and it and the gib jaw may be refitted to touch the piece thus let in.

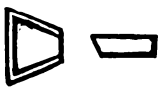
Fig. 2394.

The jaws of the gib are sometimes made slightly taper at A, Fig. 2395.

To refit the brasses to the jaws of the strap, the flanges which do not as a rule wear much are usually tinned with a soldering iron, and given a lining of babbett metal. This must be done all around the flanges (of both pairs of brasses) that come on the same side of the rod, so as to keep the faces of the brasses leading fair.

The fit between the jaws is restored by riveting pieces of sheet brass to that side of the brasses that has worn the most (usually the top which carries the weight of the rod). Fig. 2396 shows this operation carried out, A being the pieces of sheet brass which are sometimes soldered as well as held by rivets. These rivets are screwed into the brass, being composed of softened brass wire riveted after being screwed in.

Fig. 2395.

If these pieces, which are called liners, are placed on the top of the brasses at one end, they should also be placed at the top of the brasses at the other end of the rod. They should not be less than about the $\frac{1}{24}$ inch thick, the body of the brass being cut off to admit them if necessary.

In filing the joint faces of the brasses to let them together so as to take up the lost motion due to the wear of the brass bore and of the crank pin, the following considerations are met.

If the brass faces are to come "brass and brass," that is, butt

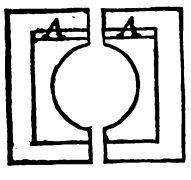

Fig. 2396.

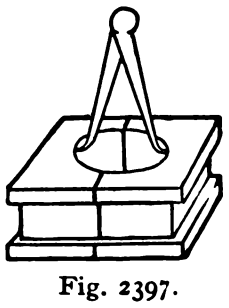
Fig. 2397.

together, when their bore is of the diameter of the journal, file those faces away until the bore appears just perceptibly too large for the journal, when measured with calipers, as in Fig. 2397, the

bore measuring parallel all the way through. But, in doing this, it is necessary to be careful to file each brass so that it shall embrace one-half the journal diameter, which will be the case when the two brasses measure correctly as above, and alike, when tested, as in Fig. 2398, in which P is a planed surface, C a pair of inside calipers, and B a brass resting on P. When filing the joint faces, test them with a square as in Fig. 2399, in which *s* is a square and B a brass, and also in Fig. 2400, in which *s* is a

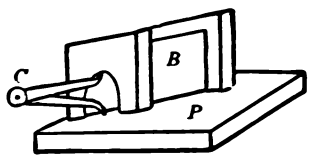

Fig. 2398.

square and B the brass shown in section, thus making the faces quite square.

The necessity of having their faces quite square when the brasses come brass and brass may be shown as follows :—

Suppose the joint to be at an angle as at A, A, Fig. 2401, instead of square across, as denoted by the dotted lines B, B, then the respective brasses will be forced by the key-pressure in the direction of the respective arrows, and there will be a tendency to

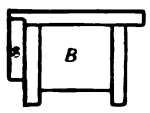

Fig. 2399.

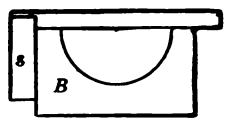

Fig. 2400.

twist the brasses in the strap. Or suppose the joint faces to be out of square as at C, C, instead of square as at D, then there will be a tendency to twist the respective brasses in the direction of E, F, and therefore to cause these to move in the direction of G, H, and as a result the brasses will spring the strap away from the rod, as shown at I, J.

To line up the brasses for length we proceed as follows: One of the liners adjusts the length of the rod and the other simply serves to set the key back to its proper height, so that it shall not

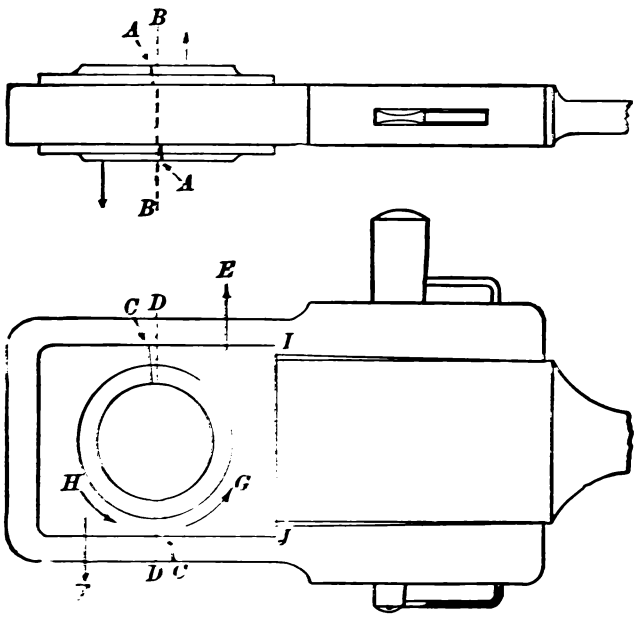

Fig. 2401.

pass too far through the keyway, as the wear of the brasses lets it down. Which of the liners will be the one by which to alter or adjust the length of the rod depends upon the design of the rod itself; but, in the case of all solid-ended rods, or those in which the position of the strap is fixed by means of bolts, it is the liner behind the end brass, as D, in Fig. 2402, as stated in the opening of this discussion, and it is the first one, therefore, to be fitted. The space at E is where the second liner requires to be placed, its thickness being that necessary to lift up the key from its bottom or lowest position, as shown in the cut, to the highest position.

In strap-ended rods in which the strap is not bolted to the rod, but moves farther upon the rod as the key passes farther through the keyway, it is the brass next to the rod end, as B, in Fig. 2403, by which to adjust the length of the rod, and its liner L is, therefore, the one to be fitted first; the space E is, in this case, the one to be fitted with a liner of sufficient thickness to lift the key up. It will now be noted that the thickness of L in both figures requires to be exact, so that the rod may be of correct length, which is necessary, so that there may be the same amount of clearance or space between the piston head and the cylinder cover when the piston is at the respective ends of the stroke.

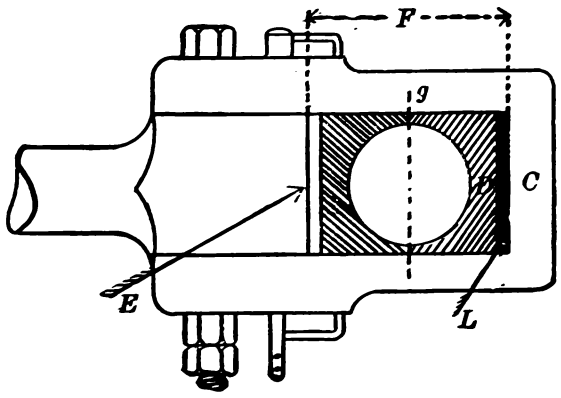

Fig. 2402.

But the liners to fill the respective spaces E need not necessarily be of the exact thickness (although it is better that they should be), because if too thin the only effect will be that the key will pass farther through the keyway than otherwise. In considering in any form of rod which is the liner to be put in first to bring the rod to length, we have the general rule that the brass that moves in the strap or rod end when the key is moved farther through the keyway is the one to be lined last. The method of obtaining the proper thickness of the liners L, Figs. 2402 and 2403, are as follows: If the rods have been correctly made at first, the centre of the brass bores will be midway in the spaces for the brasses (denoted by F in the two figures). If the oil-holes in the strap or rod end (as the case may be) have been drilled in the centre of this space F as they should be, then the line *g* will represent the

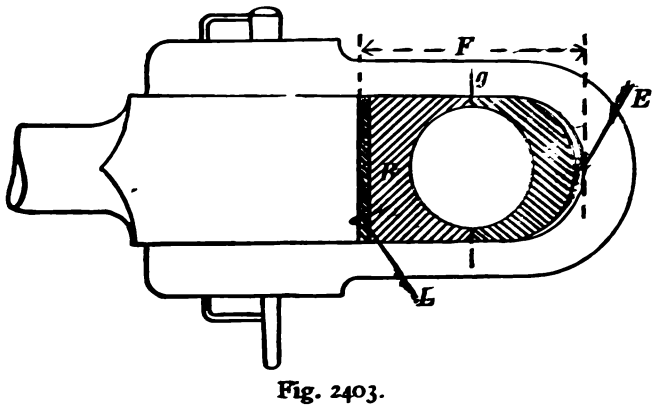

Fig. 2403.

centre of F and the centre of the oil-holes, and all that will be necessary will be to place behind D and B respectively a liner of sufficient thickness to bring the joint face of these brasses (D and B) even with the line *g*. To ascertain the thickness of liner necessary for this purpose, suppose the case of a rod end of the design shown in Fig. 2402, then, with the strap off the rod, drive the brass D down until its crown face beds fairly against the strap C, and with a scriber mark on the inside face of the jaw of the strap a line coincident with the joint face of the brass, then set the brass up the strap until its joint face comes fair with the centre of the oil-hole or the central line *g*, and then mark a second line so that on taking the brass out of the strap there will appear two lines, and the distance between these two lines is the necessary thickness of liner. In the case of the form of rod end shown

in Fig. 2403, the process would be as follows: Let the strap have placed in it the brass B only, place it upon the rod, and set it so that it binds the gib and key, when the key is lifted up to its required position, then, with the brass B bedding fairly against the rod end, mark on the strap a line coincident with the joint face of the brass as before. Then move the brass in the strap until its face comes fair with the centre of the oil-hole or line *g*,

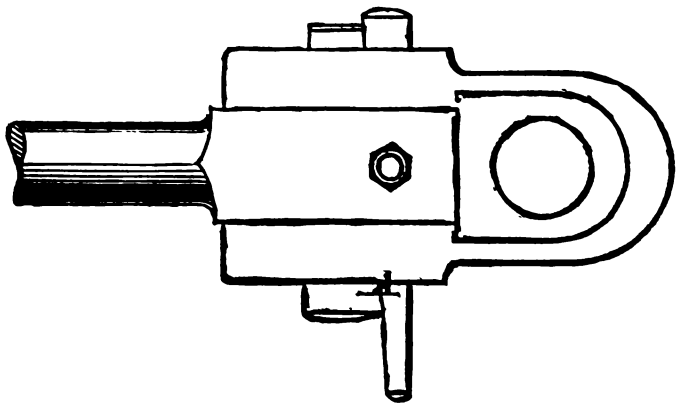

Fig. 2404.

and mark another line, and the thickness between these lines is the thickness of liner required at L.

If the brass is to be lined sufficiently to merely bring the key up without respect to the length of the rod we may drive the key home as in Fig. 2404, and mark on it a line coincident with the edge A of the strap. We then lift the key up to its proper height and mark a second line, so that when removed from the keyway the key will have on it the two lines shown in Fig. 2405, A being

Fig. 2405.

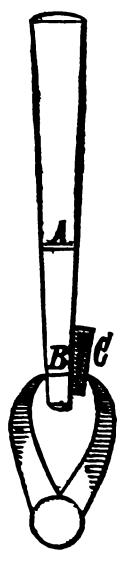

Fig. 2406.

the first and B the second line; and the difference between the width of the key at A and its width at B will be the thickness of the liner necessary to be placed behind the brass nearest to the key. To ascertain the precise amount of this difference (because a very small error as to this amount causes a great deal of extra labor), we set a pair of outside calipers to the width at A; and then passing the caliper points down to B, we keep one of the points even with the line B, and insert a wedge until it just fills the space between the other point and the side of the key, as shown in Fig. 2406, C being the wedge, which should be chalked along its surface so that, when inserted until it touches against the caliper point, the latter will leave a mark on the wedge, denoting exactly how far the wedge entered, and hence the exact required thickness of liner.

It has thus far been supposed that the joint faces of the brasses are made to come brass and brass, that is to say, butt close together from the key pressure, when the brass bores properly fit the journal. Suppose, however, that the joint of the brass is left open as in Fig. 2407, and in that case a strip of metal F, whose diameter equals that of the journal, may be inserted between the brasses as shown, and at its centre should be provided a small centre-punch mark, denoting the centre of the bore. A piece of this kind should be inserted in the brasses at each end of the rod and placed in the middle of the length of the bore, the centre-punch marks being to apply the trammels to. Or if the rod was made of correct length when new, and the bore of the brasses, therefore, requires to stand central in space F, Fig. 2403, then

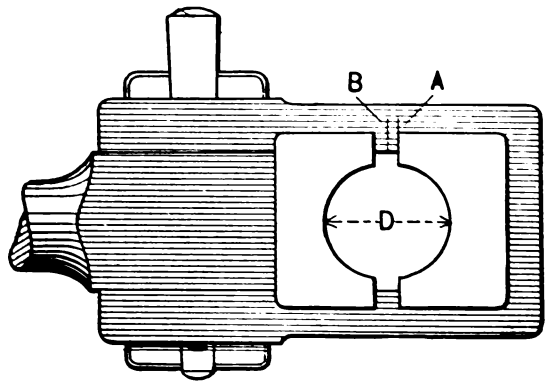

Fig. 2408.

the pieces F, Fig. 2407, may be dispensed with by marking a line B, Fig. 2408, central to space F, Fig. 2403. Then put the strap on the rod (with the brasses, gib, and key in place), and pull the strap back to hold the key up to its proper height.

The two brasses should then be placed as far apart as possible in the strap, each bedding fairly against its back or crown. Then, using the joint face of the back brass as a straight-edge or guide, a line should be marked on the side face of the strap, this line

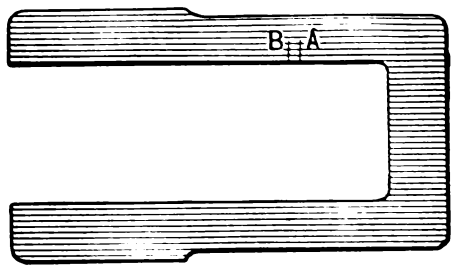

Fig. 2409.

representing the position of that face when the brass is bedded fairly home, and being shown in Fig. 2408 at A. This brass should then be moved forward until the bore of the pair of brasses at D, Fig. 2408, measures equal to the diameter of the journal (of the crank pin or of the cross-head pin as the case may be) and a second line B, also coincident with the joint face of the brass, should be marked upon the strap, and the strap will then have marked on it the two lines shown in Fig. 2409, in which it is shown removed from the rod; the distance apart of these two lines will be the thickness of the two liners combined, hence half this thickness will be the thickness necessary for each liner. Suppose, however, that it is not known whether the rod has been correctly made, and therefore it be unknown whether, in order to have the rod of the correct length, the brass bore should stand in the centre of the space or not.

This is often the case in repairs, and sometimes on new rods, in which slight inaccuracies of workmanship are apt to occur. In this case it is best to mark a line, as G, in Fig. 2410, representing at each end of the rod the centre of the space F in that figure. Then set a

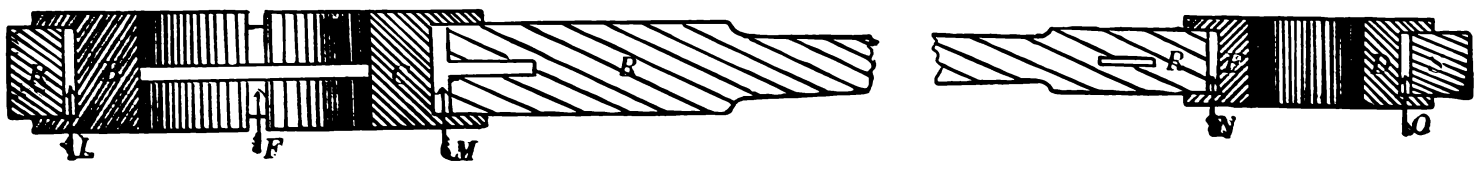

Fig. 2407.

pair of trammels to the correct length of the rod, and with one point of the trammel resting on the point at the intersection of line C with line D (the latter being the line G transferred to the centre of the bore) at the small end of the rod, we mark a line at the other end. If the lines D are too far apart, making the rod too long, the trammels will mark a line R, and the distance between lines R and D at the large end will be the amount the rod is too long, while half this distance will be the thickness of liner to go behind each bottom brass if the error of length is to be equally divided between the two ends of the rod, in which case a line T, midway between D and R, must be marked, the trammel then being rested on T, and the line

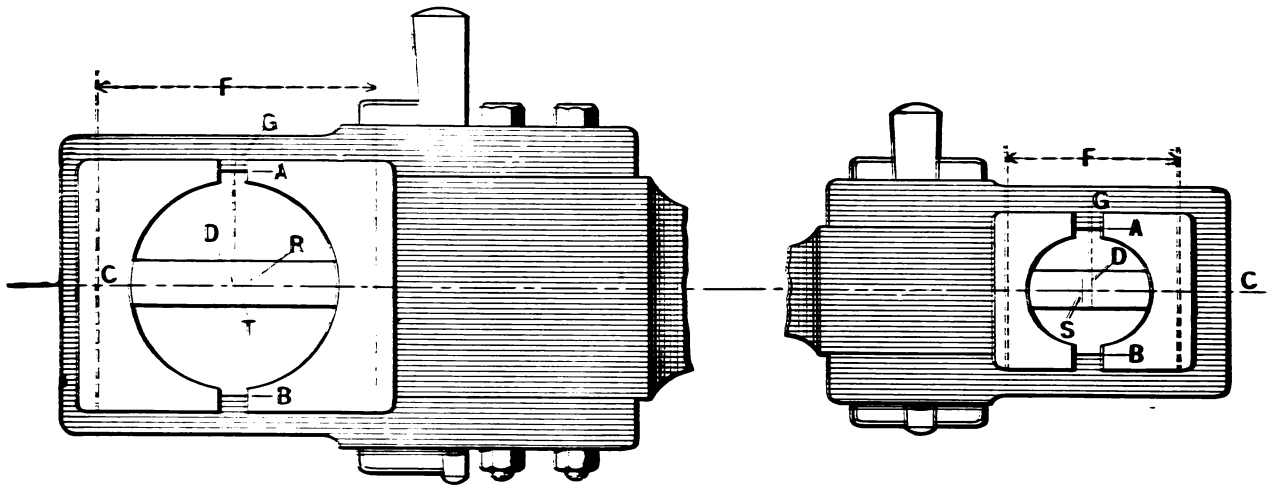

Fig. 2410.

S marked. These two lines, S and T, are then the centre lines for the bores of the brasses.

If it is determined that one pair of brasses shall be central in its space F, all the error being thrown on the other pair, this may be done by lining one pair up so that its bore is true to line D, and putting behind the back brass at the other end a liner whose thickness is equal to the distance between D and R at the large end of the rod. It is obvious that the measurement for rod length must be taken on the line C.

Having thus determined what thickness of liner is necessary to bring the rod to its proper length, it remains to find the thickness of

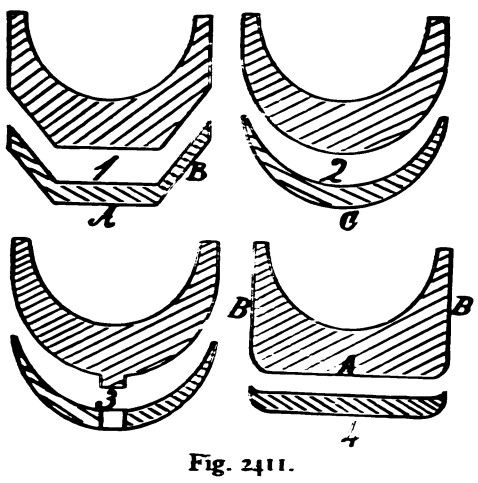

Fig. 2411.

liner necessary for the other half brass, to bring the key up to its proper position, the process for which has already been explained. After, however, the various liner thicknesses have been found, and the sheet metal selected to cut them from, it is well to try if the thickness is correct by cutting off a small piece of the metal, putting it in place behind the brass, and then, after keying up the brasses, the rod length may be trammelled.

As the liners placed behind connecting-rod brasses require to be very finely bedded, the facility with which their forms permit them to be fitted is an important consideration.

In Fig. 2411 is shown the forms commonly given, the requisite form of liner being shown beneath each. Form 1 will bed very firmly to its seat, but it will be observed that its liner is a difficult one to make, the bottom section A being thicker than the sides or wings B. This is a troublesome form of liner to fit as well as to make. If it be made of wrought iron, the wings B must be either forged or filed to their reduced thickness.

In the form at 2 in the figure we have the same defect, while in addition the liner will not adjust itself so readily in position to its bed.

This latter is an easier form to make in the moulding pattern, and easier to mould, and somewhat easier to fit, but it is not so firm as the first. To cause this form of brass to bed easily to its proper position it is sometimes given a lug on the bottom, as at 3 in the figure, the lug extending part of the width across only, because if it extended fully across, the liner would require to be in two pieces, causing trouble both in fitting them and in getting them into their places. When the lug extends partly across, the liner must have a slot to pass over and admit the lug, and this causes trouble in bending the liner to the required curve.

In the form shown at 4 in the figure all these difficulties are avoided, while, if the lower corners are made square instead of rounding, a simple piece of sheet metal will serve as a liner requiring but little fitting and bedding if it be of the proper thickness.

To fit up a link motion, assuming the machine work to be done, the first thing to do is to face up the side faces of the links, making them parallel, and true to a surface plate. The slot is then filed out square to the side faces, its curve being filed to a template T, Fig. 2412, which is provided with a piece of wire for a handle. It is supplied with red marking, and is rubbed upon the slot to mark the high spots. The same template may be used to prepare the link block or die; but as soon as the block can be moved in the slot with slight hammer blows (using a mallet or a block of wood) it should be used instead of the template, the bearing marks serving to correct and finish the block as well as the slot. In filing up the block care should be taken to make it of even thickness on each

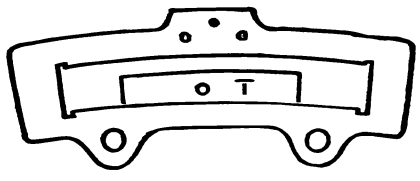

Fig. 2412.

side of its hole and with its sides parallel to the hole, the latter being of great importance. When the block is a sufficiently easy fit in the slot to permit it, a round stick of wood may be put through it and used to move it up and down the link slot for the marking process.

The next operation is to fit the eccentric rod eyes to the link, and to then ream out the holes in both the link and the eyes while they are put together. The block may then be placed in the link, and the rocker pin passed through the block and into the rocker arm, so that the working fit of these parts when put together may be tested and adjusted if necessary. The link hanger may then be fitted to the saddle pin, when the whole will be ready for the file finishing and polishing, after which it may be case-hardened.

CASE-HARDENING.—Case-hardening consists in the conversion of the surface of wrought iron into steel, or in converting the grade of a low steel into a sufficiently high grade to render it capable of hardening. The depth to which this conversion occurs depends upon the material used to produce it, and the length of time the process is continued, varying from $\frac{1}{64}$ inch under the prussiate of potash process to $\frac{1}{16}$ or $\frac{1}{8}$ inch in the case of long-continued box case-hardening.

Work that is thoroughly case-hardened has a dull white, frosted-looking surface. If the surface of the work is mottled, or has patches of fancy water-mark colors, it may be hard, but it is not so to the highest attainable degree.

To thoroughly test this, take a new dead-smooth file and apply its corner edge under heavy pressure to the work on an edge where the fancy colours are, and then on an edge where the surface is white, and the latter will be found to be the hardest as well as hardened the deepest.

The simplest method of case-hardening is by the prussiate of potash process, for which it is essential that the prussiate of potash be finely powdered, and contain no small lumps. The piece being heated may then, if small, be dipped in the prussiate of potash, or if large have the same spread upon it. In either case, however, the work must be hot enough to cause the potash to fuse and run over the work surface, and this action may be assisted by using a piece of iron wire, spoon-shaped at the end, wherewith to apply potash to the work and rub it upon the work surface.

After the potash has thoroughly fused and run over the entire surface of the work it will usually have become somewhat cooled, and will require reheating before quenching in the water.

If this reheating be done in the blacksmith's fire, it is not well to put the blast on; it is better to let the blast on gently while applying the potash to the work, so as to have a live clear fire to put the work in, and reheat it with the blast turned off.

While the work is in the fire it should be constantly rotated, not only to heat it evenly, but to let the adhering potash run over the entire surface, and as soon as the required heat is attained the work should be removed from the fire quickly and quenched in water.

It may be added, however, that if after the potash has been applied and fused more potash be added, so that it will adhere to the work and not fuse until the work is put into the fire a second time, then, after the work is quenched and taken from the water, there will be found on it a thick white and closely adhering fur of melted potash, and the work will be a dead white, with no fancy colors on it, and as hard as it is possible to make it.

The prussiate of potash process is, of course, from its expensiveness, both in material and labor, too costly for work to be done in quantities, and box-hardening is therefore resorted to.

In box case-hardening the work is case-hardened all over. It consists in packing the work in an iron box containing the hardening material, and subjecting the whole to a cherry-red heat for some hours.

A very common process is to fill a sheet-iron box with the work closely packed about with bone-dust, the pieces of the work having at least a thickness of $\frac{3}{8}$ths of an inch of bone-dust around them. The seams of the box are well luted with clay to prevent the gases from the consumed bone-dust from escaping, and to exclude air.

Various ingredients are used to effect case-hardening. One process is as follows: 20 lbs. of scrap leather and 15 lbs. of hoofs (cut into pieces of about an inch square), 4 lbs. of salt, and one gallon of urine are prepared, and a wrought iron box with a lid capable of being fastened on is obtained. The fastenings must be capable of ready unfastening when hot. A layer of leather and pieces of hoofs about $1\frac{1}{2}$ inches thick is first laid in the box, then a layer of salt, and then a layer of work. Leather and hoof are then packed closely around the work and above it for a thickness of about an inch, and a second layer of work added, and so on, the last layer being of leather, &c., completely filling the box; the urine is then added, and the box well sealed with clay.

The box is placed in a furnace and kept at a red heat for about fourteen hours, and is then taken to a deep tank, and the work quickly immersed, so as not to be exposed to the air after the box is opened.

If the pieces are of solid proportions, so as not to be liable to bend or warp in the cooling, the contents of the box are simply dumped into the tank, the water being allowed to flow freely in the tank to keep up a circulation and cool the work quickly; some work, however, requires careful dipping to prevent it from warping. Thus a link or a double-eye would be dipped endwise, a plate edgewise; but all pieces should be immersed as quickly as possible after the box is opened.

Sheehan's patent process for box case-hardening, which is considered a very good one, is thus described by the inventor:

DIRECTIONS TO MAKE AND USE SHEEHAN'S PATENT PROCESS FOR STEELIFYING IRON.

No. 1 is common salt.
No. 2 is sal soda.
No. 3 is charcoal pulverized.
No. 4 is black oxide of manganese.
No. 5 is common black rosin.
No. 6 is raw limestone (not burned).

Take of No. 1, 45 lbs., and of No. 2, 12 lbs. Pulverize finely and dissolve in as much water as will dissolve it and no more—say 14 gallons of water in a tight barrel; and let it be well dissolved before using it.

Then take three bushels of No. 3, hardwood charcoal broken small and sifted through a No. 4 sieve. Put the charcoal in a wooden or iron box of suitable size made water-tight.

Next take of No. 4, 5 lbs., and of No. 5, 5 lbs., the rosin pulverized very fine. Mix thoroughly No. 4 and No. 5 with the charcoal in your box.

Then take of the liquid made by dissolving No. 1 and No. 2 in a barrel as stated, and thoroughly wet the charcoal with the whole of said liquid, and mix well.

The charcoal compound is now ready for use.

A suitable box of wrought or cast iron (wrought iron is preferable) should next be provided, large enough for the work intended to be steelified.

Now take No. 6, raw limestone broken small (about the size of peas), and put a layer of the broken limestone, about $1\frac{1}{2}$ inches thick, in the bottom of the box. A plate of sheet iron, one-tenth of an inch in thickness, is perforated with $\frac{1}{4}$-inch holes one inch apart. Let this plate drop loose on the limestone inside the box. Place a layer of the charcoal compound, two inches thick, on the top of said perforated plate. Then put a layer of the work intended to be steelified on the layer of charcoal compound, and alternate layers of iron and of the compound until the box is full, taking care to finish with a thick layer of compound on the top of the box. Care should also be taken not to let the work in the box come in contact with the sides or ends of the box. Place a suitable cover on the box and lute it with fire-clay or yellow mud. The cover should have a quarter-inch hole in it to permit the steam to escape while heating.

The box should now be put in an open fire or furnace (furnace preferred), and subjected to a strong heat for five to ten hours, according to the size of the box, and the bulk of iron to be steelified. Remove the pieces from the box one by one and clean with a broom, taking care not to waste the residue, after which, chill in a sufficient body of clear, cold water, and there will be a uniform coat of actual steel on the entire surface of the work to the depth of $\frac{1}{16}$ or $\frac{1}{8}$ of an inch, according to the time it is left in the fire. The longer it is left in the fire the deeper will be the coat of steel.

Then remove the residue that remains in the box, and cool with the liquid of No. 1 and No. 2, made for the purpose with 20 gallons of water, instead of 14 gallons, as first used with the charcoal compound.

The residue must be cooled off while it is hot, on a piece of sheet iron or an iron box made for the purpose. Turn the residue into the supply box, and it will be ready for use again. The more it is used, the better and stronger it will be for future work.

There is nothing to be renewed for each batch of work but the limestone, and that, after each job, will be good burned lime.

A process used at the Elevated R.R. shops in New York city is as follows: The materials used are: leather, 1 part; bone dust.

5 parts; salt, 1 part. Heat for 48 hours to a red heat in a box sealed with fire clay, and quench in a solution of 3 pounds of potash to 30 gallons of water.

The wrought iron thus treated is impervious to a new smooth file at a depth of $\frac{1}{16}$ of an inch.

The potash water is said to prevent both warping and the formation of blister marks on the work.

The durability of work case-hardened is greatly enhanced, but it is an expensive process; not so much by reason of the cost of

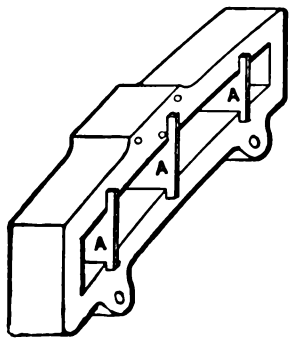

Fig. 2413.

it, but because it involves resetting and a refitting of the parts. The resetting is necessary because the work warps under or during the process. This warping can be prevented to some extent by placing the heaviest pieces in the bottom of the box, and so packing the same that the weight of the top pieces shall not tend to bend those beneath them when the hardening material has burned away, and so placing the upper pieces that they shall not be bent by their own weight. Thus both in

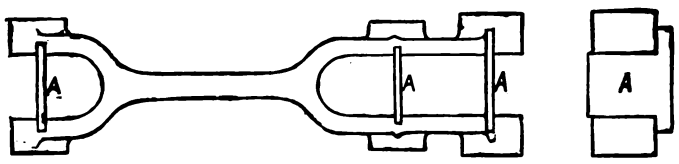

Fig. 2414.

packing and locating the work in the box the utmost care is necessary.

SETTING WORK AFTER HARDENING IT.—Work that has been hardened or case-hardened usually swells during the hardening process, and therefore requires refitting afterwards. This swelling usually occurs in all directions, thus holes and bores become of smaller dimensions, while the outside dimensions also increase, bolts become of larger diameter and sometimes increase in length.

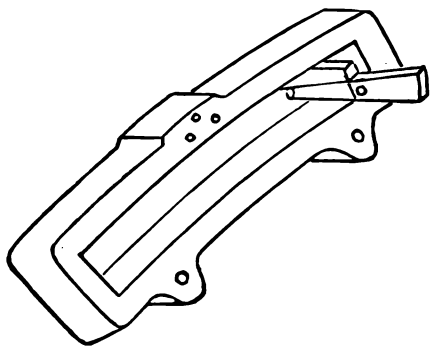

Fig. 2415.

In very exceptional cases, however, the dimensions of a piece of work will not alter.

This renders it usually necessary to refit the work after it has been hardened, thus holes which are ground out by laps or bolts may be ground to diameter in a grinding lathe.

In some practice, however, the work to be hardened is made a somewhat too easy fit, the holes tapped out and the bolts ground in by direct application of the bolts to their holes in connection with flour emery and oil. This latter plan is also adopted for forms not easily ground out in a machine, as, for example, a die in a link of a link motion.

To prevent surfaces or forms of this class from altering their shape or dimensions during the hardening process, slips of iron are sometimes fitted to them before they are placed in the hardening box. Thus Fig. 2414 represents a double eye, and Fig. 2413 a link having thin pieces fitted in as shown at A in both figures.

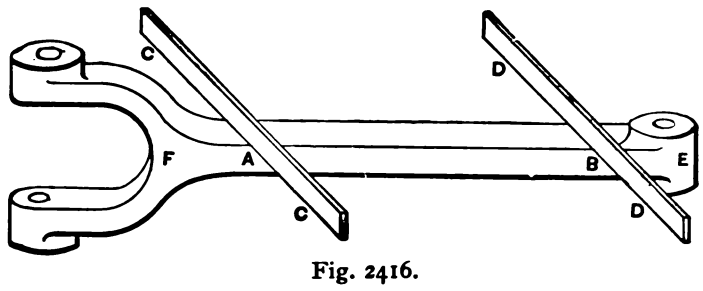

Fig. 2416.

The heating for the hardening process is also apt to impair the alignment of the work, causing it to require resetting by the aid of parallel strips and straight-edges.

The faces of the link having been set, the width of the link slot must be set, for it may open or close in places. If it opens it may be closed by the jaws of a powerful vice, while if it closes it may

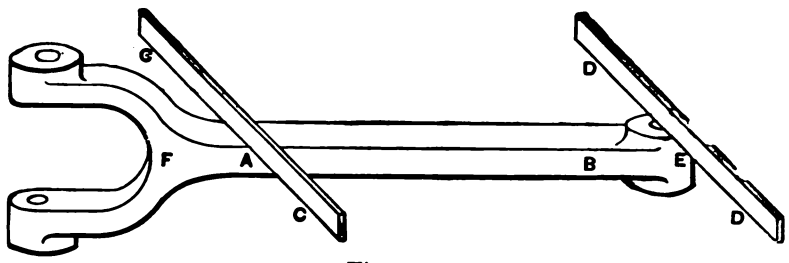

Fig. 2417.

be opened by a pair of inverted keys, inserted as shown in Fig. 2415, and driven in by the hammer. At each trial, however, a mark should be made on the driven key, so that it may be known how far to drive it at the next trial.

Fig. 2416 represents a link that is supposed to have been case-hardened, and to therefore require resetting. The stem

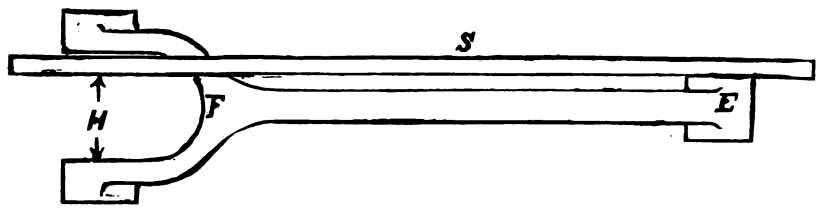

Fig. 2418.

from A to B should first be straightened to a straight-edge on both its side and edge faces. It should then be tested for winding with the winding strips, C, D, placed as in Fig. 2416, and then as in Fig. 2417.

To test the alignment of end E, press a straight-edge S fair against its side face, as in Fig. 2418, and measure the distance

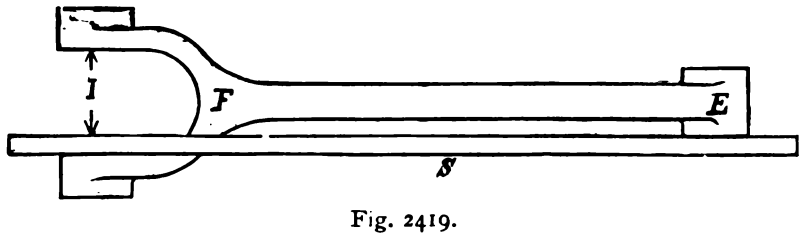

Fig. 2419.

H. Then place the straight-edge on the other side face of E and measure the distance I, Fig. 2419, and these distances both measuring alike, E will be true providing that the jaws at end F have not altered from their proper width apart.

To test the alignment of the jaws at end F, press a straight-edge against the outside face of the hub and measure the

distance J, Fig. 2420, then apply it on the other side and measure distance K, Fig. 2421, and when distances J and K are equal and the width L between the jaws is correct, end F is in line in one direction. To test it in the other direction, apply a pair of

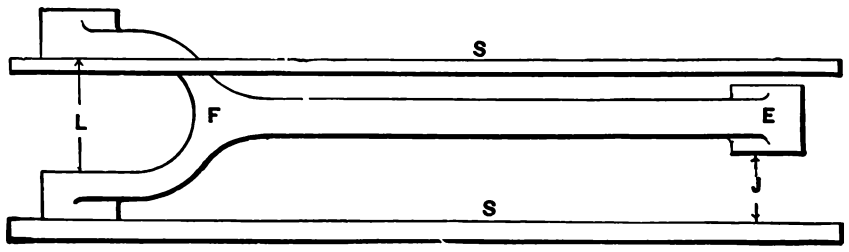

Fig. 2420.

parallel strips, placing one on end E as in Fig. 2417, and the other across the face of the hub of end F to see if there is any twist.

Suppose, however, that distances J K are unequal, then if

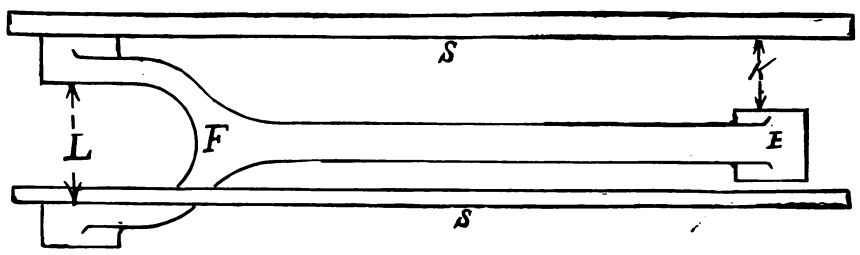

Fig. 2421.

distance L is too narrow (when tested by the piece that fits between the jaws) then the jaw at F that gives the widest distance at E is the one that requires correction, or if distance L is too

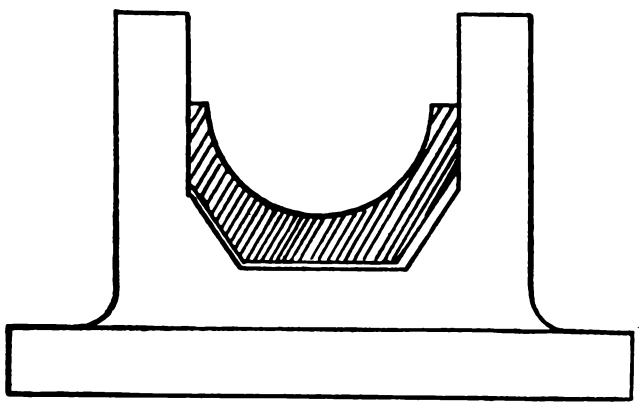

Fig. 2422.

wide, the jaw that shows the least distance at end E is the one requiring correction.

The link should be warmed to about 300°, or nearly *black* hot, and pieces of sheet copper placed between the work and the

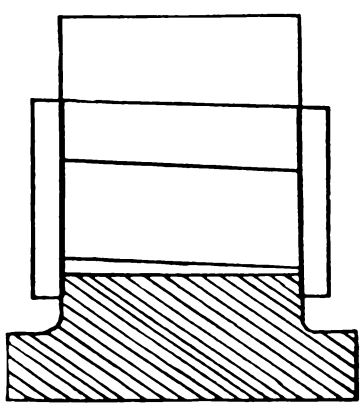

Fig. 2423.

anvil, and between the blacksmith's tools and the work, so that the latter may not be bruised by the blows delivered to effect the straightening.

After the process has been performed at each end individually the testing should be repeated, because setting the end F may have impaired the setting of end E, in the alignment to F.

It is obvious that the same setting or aligning process would be required in the case of a large link, where the ends were forged separately and welded to the body after the machine work and fitting had been done to them.

FITTING BRASSES TO BOXES OR TO PILLAR BLOCKS.—In the operation of fitting brasses to their boxes or to pillar blocks there are two things to be especially guarded against: First, having

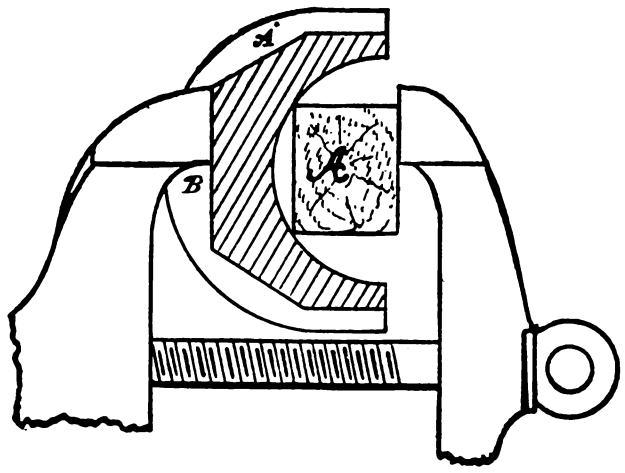

Fig. 2424.

the brass let down one-sided, as shown in Fig. 2422; and next, aslant, as shown in Fig. 2423. The first depends on taking the proper amount off the two side faces, and the second in cutting the inside of the flanges fair. To cut the side faces fair, grip the brass in the vice, as shown in Fig. 2424 (the brass being shown in section), in which A is a block of wood. Take the measure of the box, down where the brass will come when home,

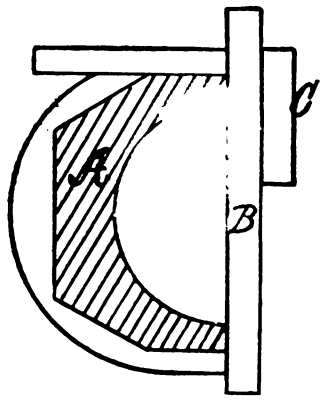

Fig. 2425.

and, if there be any taper to the box, set the inside calipers to the top of the location for the brass, and after the brass is in the vice place a square under one side-face, as at B in Fig. 2426, and see how much there is to come off. This saves the use of outside calipers, and is better because, not only is the trouble of setting the latter avoided, but the inside calipers can be tried to the box

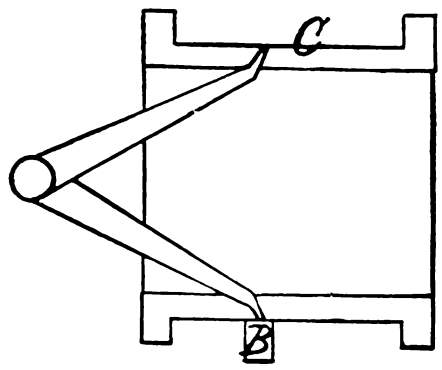

Fig. 2426.

and the work in an instant, and a correction can at once be made if the calipers have got shifted. The cape chisel, or cross-cut, as it is sometimes termed, should first be used, taking a cut close to the flange, and making it half as deep as the calipers (applied as shown in Fig. 2426) show there is metal to come off. Then a similar cut should be taken close to the other flange, especial

care being taken to take both cuts equally deep, and leaving as much to come off the other side face of the brass; otherwise, the brass will come atwist. Then take a straight-edge, and, placing its edge fair with the two chisel-grooves, while holding it firmly against the joint face of the brass, mark a line running from one chisel groove to the other; this line serving as a guide for the depth of all the other cape-chisel grooves. Now cut off the intermediate spaces with the flat chisel, using a straight-edge as a guide. If the box is taper, chip the side face to a corresponding taper, using a bevel-square, or estimating the amount by the eye if it is not too much. Now file the chipped surface flat and true, and then turn the brass upside down, gripping it with the wood as before, and dress the other side face (applying the inside

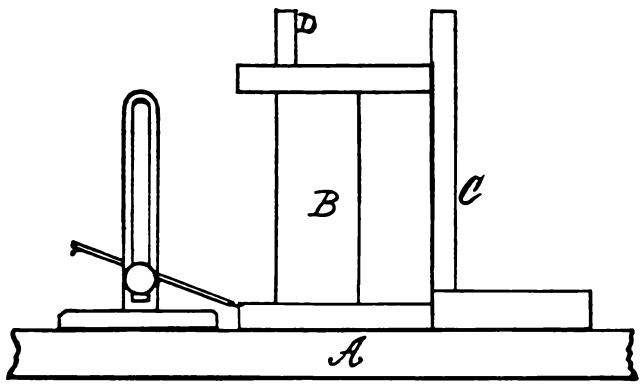

Fig. 2427.

calipers as in Fig. 2426), and bring that face down to within about $\frac{1}{64}$ inch of the size to which the calipers are set. If the block of wood is made a little shorter than the length of the brass, the calipers can be applied without moving the brass from or in the vice. The method of applying the square to these side faces is shown in Fig. 2425, in which A is the brass in section, B a straight-edge, and C a square.

We now turn our attention to the flanges, and apply a square to the crown of the box, bringing the edge of the blade fair with the edge of the box, as shown in Fig. 2428, A representing the box in section, and B the square. Supposing the crown of the box to stand square, as shown in the engraving, and as it should do, we set the brass upon a truly-surfaced iron plate and square

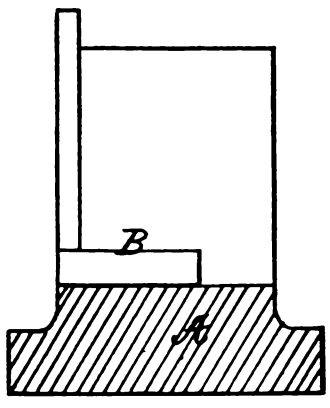

Fig. 2428.

up the joint face, as shown in Fig. 2427, in which A is the surfaced iron, B the brass, and C the square. Since, however, the joint face of the brass may not be parallel with the crown face, we may place the square so that its blade edge comes fair with the crown face—that is, as shown at D in Fig. 2427—and set the brass crown (by means of inserting a wooden wedge under its face) truly perpendicular or parallel with the square blade edge. Now try the square with the side face of the brass, setting the latter true with the square blade, as in Fig. 2430; A being the iron plate and B the square; and, supposing the box to be true, as it usually is, we may set a scribing-block, as shown in Fig. 2427, and mark off how much is to come off the flanges by scribing a line around the flange, sufficiently depressing the scriber-point to allow an equal amount to come off each of the flanges. Sometimes, however, the inside faces of the box are not true with the outside face. To test this, we place a straight-edge across the outside face, place a square on it, and apply it to the inside face of the box, as in Fig. 2429, which is a plan view of the box, A being the straight-edge and B the square. If the square thus applied shows a want of truth in the box, we may set the brass over when adjusting it (as in Fig. 2427) to a corresponding amount, and thus mark off the flanges to suit the box.

To hold the brass while operating on the flanges, we resort to

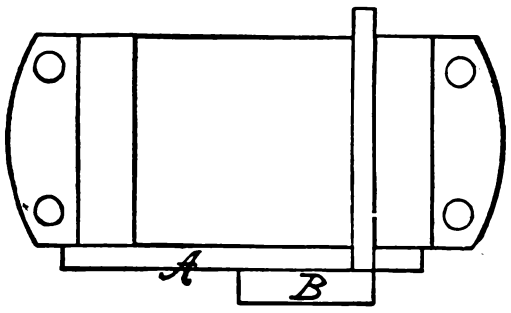

Fig. 2429.

the device shown in Fig. 2431, in which A is a bolt, B the brass, C a piece of hard wood, and P a clamp fastened down by a nut D. To sustain the plate P, so that it shall not fall down on the piece of wood every time the brass is taken out to try it in the box, we may insert the spiral spring S, shown in the separate view of the bolt, nut, and plate. One such holding device will do for different

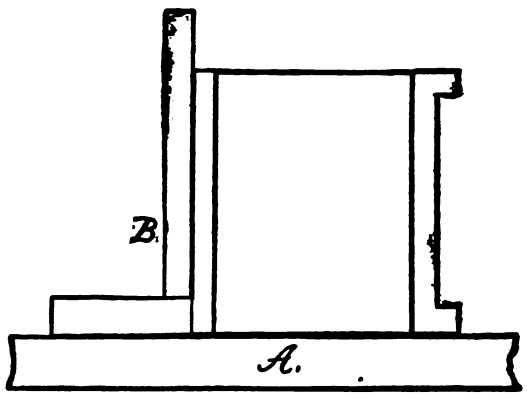

Fig. 2430.

sizes of brasses, by either gripping the bolt lower down in the vice jaws or putting washers between the nut and the plate. This will hold the brass very firmly, and at the same time leave the whole of the flange easily got at. When the flanges are dressed, we may try the brass in the box, putting red-lead marking on the box to mark where the brass binds. While letting the

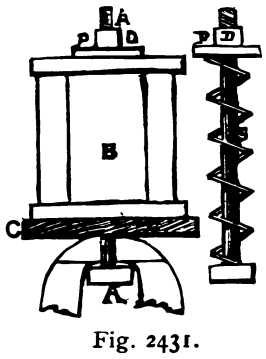

Fig. 2431.

brass down, however, we must be careful to let it down fair, to avoid the state of things shown in Figs. 2422 and 2423. A ready method of doing this is (supposing the box to be true, as it should be, and making the necessary allowance if it is not), to set a pair of inside calipers to the joint face of the brass and the top of the box, as shown in Fig. 2432, trying the calipers (in the two positions there shown) on both sides of the box. This should be done every time the brass is tried in the box, until such time as the brass begins to bed against the bottom of the box.

We now come to the bedding of the brass to its seat in the box. This requires skillful treatment; for one mistake will involve a great deal of extra work to rectify it.

In fitting the brass to the box care must be taken to leave it a rather tighter fit to the box than it requires to be when finished, that is after the bore has been made, because in the boring operation the sides of the brass are apt to close and loosen the fit of the brass to the box.

When the side faces and flanges are so far fitted as to render probable the brass driving home at the next trial, the bed of the box should be given a coat of red-lead marking, and small pellets of stiff red lead or putty should be stuck on the bottom of the box, two at each end of each bevel, and two at each end of the bottom, with one in the middle of the bottom and each bevel, as shown at

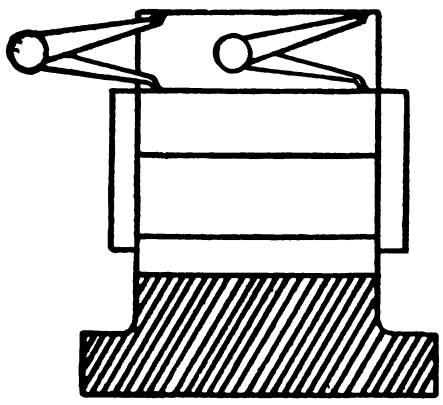

Fig. 2432.

A, B, C, D, E, F, in Fig. 2433, by the black spots. Then when the brass comes home, it will flatten these pellets, and their thickness (when the brass is taken out) will show how much the bevels are out, and how much to take off the brass to make it bed. These pellets *must* be restored to their original shape every time the brass is tried; otherwise, they may mislead. To insure their sticking to the box, and not coming out with the brass, the bottom of the box must have red-lead marking kept upon it. The chipping should continue until the pellets flatten out equally on the two bevels, but are left a little thicker on the bottom. If this is not done, the bottom will bed first, causing a great deal of extra filing, because filing the side bevels will let the bottom down too far.

In driving the brass in and out of the box while fitting it, a

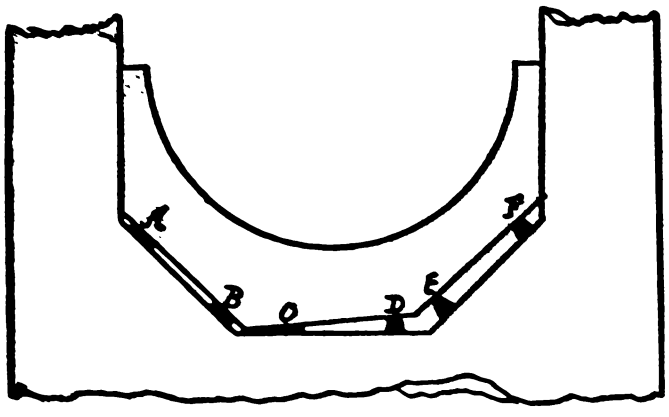

Fig. 2433.

piece of wood must be used to strike on, otherwise the brass will stretch during the fitting and come loose in the box during the boring.*

The patterns from which the castings for brasses are moulded should not be made of the same angle or sweep on the bedding part or bottom as the bottom of the box, pedestal, or pillar block, because the brass casting, in cooling in the mould, contracts across the bore: thus if in Figs. 2434 and 2435 the full lines denote the shape of the pattern the dotted lines denote the shape the casting will be.

The result of this is that when the brass is let down in the box it will bed on the crown and not at the sides. Thus in Fig. 2436, A is a pedestal, and B a brass which beds at C, but not at D or E. In Fig. 2437 is shown an example of a brass, with a circular bottom, which would bed at the crown C, but not at the sides D E, until the metal was cut down to the dotted circle F.

The amount to which this contraction in the mould occurs varies with the size of the brass, the difference in the thickness at the crown and at the face joint, the composition of the metal of

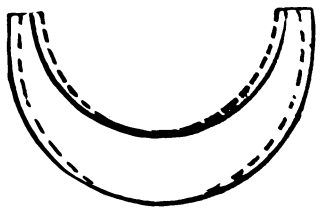

Fig. 2434.

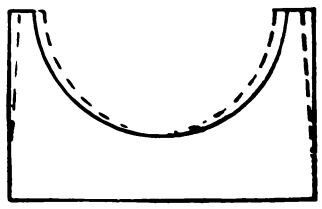

Fig. 2435.

which the casting is made, and the temperature of the metal when poured into the mould. It should always be allowed for, however, for the following reasons. Referring again to Fig. 2436, it will be noted that it requires a heavy cut off C to bring E,D to a bearing, while it is apparent that if the brass met the box at E,D before it did at C, but little filing at E,D would let the brass down a long way. It saves work, therefore, to so make the pattern as to insure that the brass casting shall have bedding contact at D

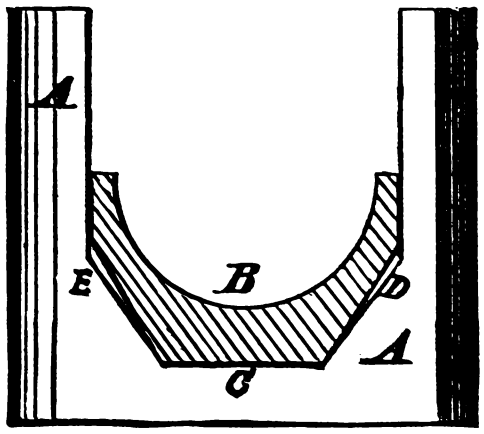

Fig. 2436.

and E before it does at C. As an example of the allowance to be made for this purpose, it may be stated that in brasses of 6 inches bore and 9 inches long, the hexagon of the brass pattern at D,E, Fig. 2436, would require about $\frac{1}{16}$ inch put on them to compensate for the contraction, supposing that the hexagon on the brass pattern were made at first to fit the hexagon of the pedestal or axle box.

To originate a true flat surface we proceed as follows: In the absence of a standard plate to go by, we must have three

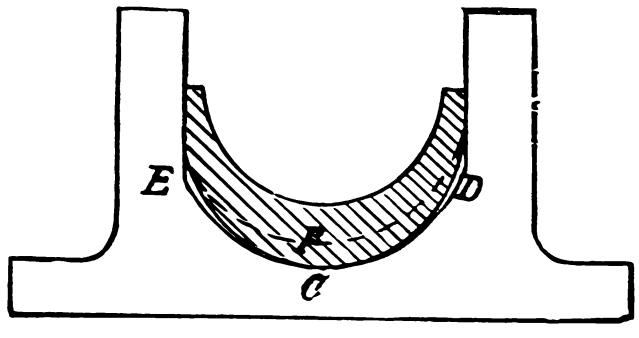

Fig. 2437.

plates, and one of them must be accepted as a provisional or temporary standard. This we will call No. 1, and we fit Nos. 2 and 3 to it and then try them together, and if they also fit it is proof that No. 1 was true, and that all three are therefore true. It will very rarely happen, however, that this is the case; but Nos. 2 and 3 merely serve to show how much No. 1 was out of true.

Suppose, for example, that No. 1 is concave in its length, and we fit No. 2 to it, as in Fig. 2438, and then fit No. 3 to it as in Fig.

* See remarks on Pening, p. 162.

2439, and when we come to put Nos. 2 and 3 together, as in Fig. 2440, we find that they are out of true to twice the amount that No. 1 is, and that all the work that has been done to them to fit them to No. 1 has been thrown away, and possibly to make

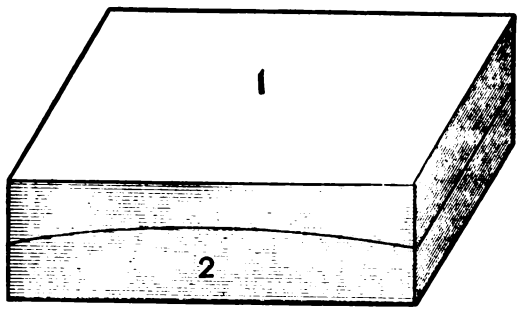

Fig. 2438.

them worse instead of better. It becomes important therefore to select the most true plate for No. 1, and this we may do as follows :—

If we have a straight-edge that is known to be true, we may

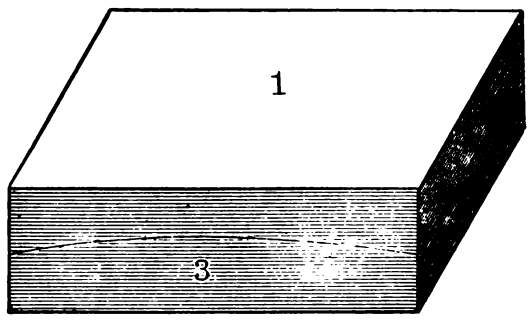

Fig. 2439.

lay it on the face of a plate and move it laterally from each end alternately, and if it swings from the centre the plate face is rounding, while if it shuffles across moving first at one end and then at the other the face is hollow ; but if it glides as it were

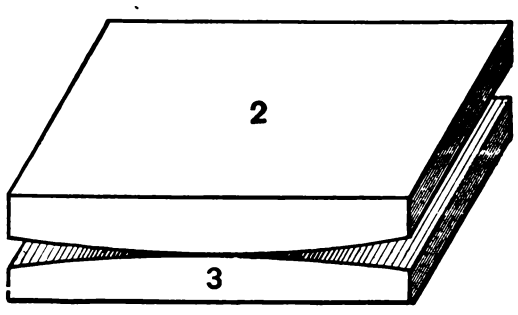

Fig. 2440.

across, the surface is nearer true. The straight-edge must not be pressed to the plate, but merely touched laterally to make it move laterally, for if we take a true straight-edge and press it vertically to a true surface while moving it, it will show the marks

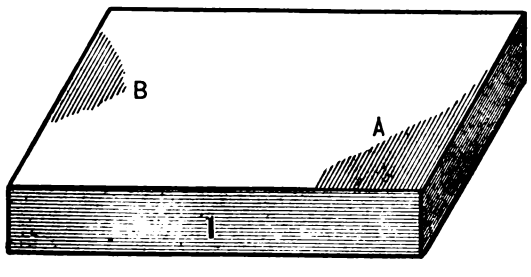

Fig. 2441.

of contact the most plainly immediately beneath the parts where it is pressed. Selecting by this means the two plates that appear to be the most true we proceed to test them further as follows : We give to one of them which we will call No. 1 a light coat of red marking, and placing it upon the other or No. 2, we move it about in all directions and then take the two apart to examine the bearing marks. Suppose then that No. 1 shows the bearing marks to be at the shaded places, A and B, in Fig. 2441, while the bearing marks on No. 2 are as at the shaded parts A and B in Fig. 2442, the two ends A having been placed together ;

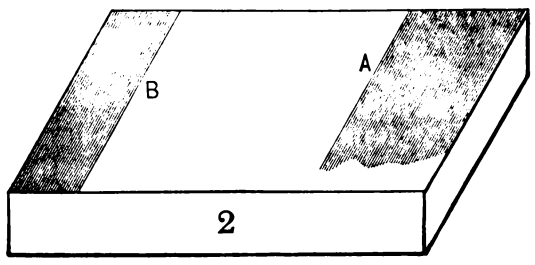

Fig. 2442.

then we know that B is a high spot on No. 1, and A a high spot on No. 1 for the following reasons. The marks at A, No. 2, have been made by the marking at A on No. 1, and will extend across No. 2, a distance depending upon how much No. 1 has moved across No. 2, for if corner A of No. 1 had only moved half-way across No. 2, it could only have marked half-way across it.

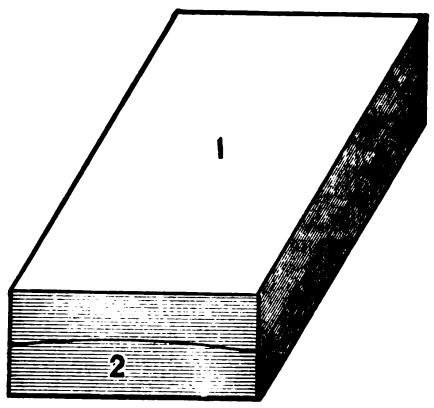

Fig. 2443.

Similarly spot B on No. 1 has marked spot B in No. 2, because it has been moved all the way across, it being evident that the marking on B, No. 1, can only mark plate 2 as far across its width as it is moved across it. From this it follows that the higher or more prominent a spot is the less will be the area of the bearing mark at that spot.

Now suppose that the two plates were curved to an equal

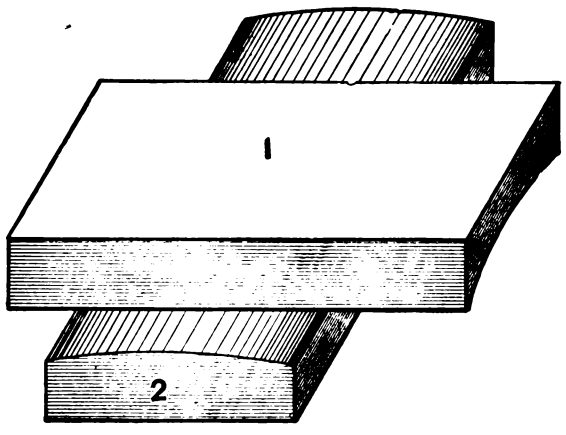

Fig. 2444.

degree as in Fig. 2443, and the bearing marks would extend all over both surfaces ; but we may discover this error by turning one plate at a right angle, as in Fig. 2444, in which case the bearing marks would show along the edges of No. 1 and along the middle of No. 2, and we may correct each with the file until both plates mark all across and from end to end when tried together lengthways as in Fig. 2443, and one across the other as in Fig. 2444.

But the plates may be curved to a different degree, as in Fig. 2445, and it then becomes necessary to know which to file the most in correcting them and fitting them together, which we may discover as follows :—

We give one plate a light coat of red marking and rub it upon the other both sideways and lengthways. Suppose that on being separated and examined the bearing marks, shown as at A A and B B, Fig. 2446, on one plate, and at C C and D D, Fig. 2447, on the other, and as those at A A and B B are the narrowest, or in other words extend the least distance across the plate, it is proof

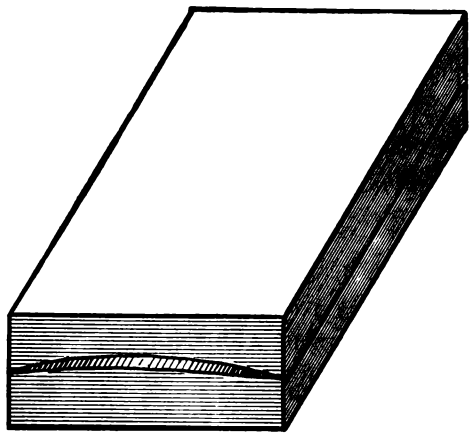

Fig. 2445.

that this plate is more concave than the other plate is convex, and therefore needs the most correction. This is plain because whatever part of a plate touches another, will, if the two are merely pressed together, only leave a bearing mark equal in area to itself, while this area will obviously be increased in proportion as one plate is moved about upon the other.

When the object is to merely produce a flat surface, independent of the thickness or parallelism of the plate, it is not always necessary to file or scrape the whole of the area showing bearing marks. Suppose, for example, that the marks appear as in Fig. 2448, and as the bearing marks at A A show that edge of the plate to be straight already, all that is necessary is to ease the surface at B in order to let that side of the plate come up.

When we have fitted two of the three plates together we must accept one of them as a true one and (calling it No. 1) fit Nos. 3 and also 2 to it, and then try Nos. 2 and 3 together. If these require correcting the amount of correction must be made equal

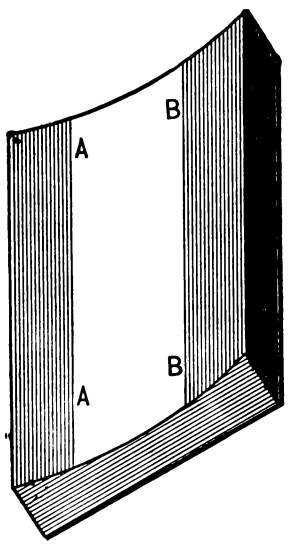

Fig. 2446.

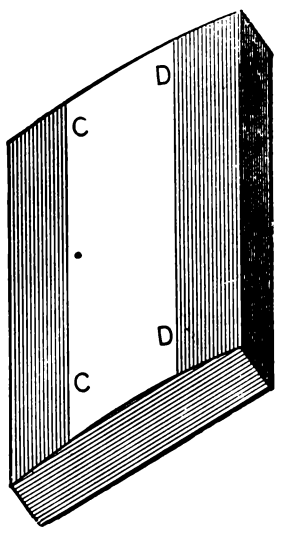

Fig. 2447.

on each, and when this is done we must accept one of these two (say No. 3) as the standard, fit No. 1 to it, so that Nos. 1 and 2 both having been fitted to No. 3 may be tried together and both corrected equally; nor will the surfaces of any of them be true until all three will interchange in this manner and show a perfect contact.

It is to be noted, however, that in this process we have not altogether eliminated the error due to the deflection of each plate. Suppose, for example, a plate to be resting on its feet and its middle will sag or deflect to some extent (very minute though it may be in a small plate), and when we place another plate upon it the latter will also sag or deflect if its points of contact are far apart, and in any event the truing is performed by the bearing-marks, which the operator knows show the darkest and the brightest where the contact is greatest; hence by the time the contact marks show equally strong all over, the top plate will have been fitted to suit the deflection of the lower one. Since, however, the nearer the points of contact (between the plates) are together the less the degree of deflection, it is better in trying them to place the test plate on the top of the one being operated on. If the plates are long ones it will not answer to have more than three points of rest for the lower plate, unless the foundation on which the plate rests is made so true that each resting point of the plate will bear with equal pressure on the foundation plate or stone.

To eliminate as far as possible the deflection, the three plates may be got up by the process described, and then finished by trying them when resting on their edges (the trued surfaces standing vertical), interchanging the three plates as before.

In this case the surface will be true when standing vertical as finished, but there will still be some untruth from deflection when the plates are rested on their feet, though it will be less in amount than if the plates were finished on their feet as first described.

In finishing surface plates with a hand scraper, we have a surface that bears in fine spots only, these spots being the tops only of the scraper marks. Now the depth of the scraper marks

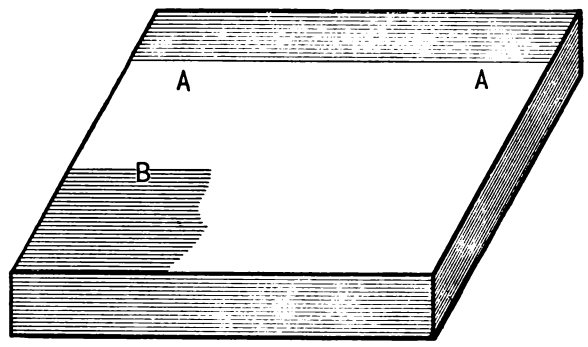

Fig. 2448.

are unequal, because immediately after the scraper is sharpened it cuts the easiest and the deepest, the scraper cutting less deep as its edge dulls. The operator regulates this to some extent by applying a greater pressure to the scraper as it gets dull, but from differences in the texture of the metal and from other causes it is impracticable to make the scraper cut equally deep at each stroke, as a result the tops of the scraper marks, which are the points of contact of the plates, wear away quickest, and the plate soon loses, to some extent, its truth.

Again, work that is so small as to cover part of the plate surface only, wears the part of the plate to which it is applied, and although the careful workman usually applies small work at and near the outside edges of the plate only, still these are all elements tending to produce increased local wear and to throw the plate out of true.

To obviate this difficulty the surface should be got up to bear all over, thus greatly increasing its bearing area and proportionately decreasing its wear. To produce such a surface the following plan was adopted by the author in 1876.

The filing process was continued with fine Groubet files, and testing the plates, rubbing them together sufficiently to mark them without the use of oil. Very short file strokes must be employed, and great care taken to apply the file to the exact necessary spots and places.

Then instead of using the scraper, No. 0 French emery paper was used, wrapped over the end of a flat file. The plates being interchanged and trued with No. 0, No. 00 was used, and the testing and interchanging repeated. These grades of emery paper were then wrapped or folded over the curved end of a piece of wood, the plates interchanged and rubbed together as before, and the emery paper used as described for the scraper. Sub-

sequently Nos. ooo and oooo French emery paper were similarly applied until the plates were finished. Much assistance to this method may be rendered by taking a piece of Water of Ayr stone, and truing its surfaces by rubbing them on the plates after the fine filing and before the emery papering. Then while applying the finer grades of emery paper the stone may be rubbed (with oil or water) in various directions over the surface. This has the effect of wearing off the very fine protuberances due to the emery paper cutting the metal most around its pores, and furthermore it causes the marks made in testing to show more plainly.

In skillful hands this process very far surpasses, both in the superiority of its results and in rapidity of execution, the scraping process, leaving a brilliant polished surface, so smooth that it feels as soft as satin, and the contact becomes so complete that no bearing marks can be distinguished.

In this process great care must be taken in cleaning the surfaces before applying them together, as the finest particle of dust will cut scratches, which though imperceptible on scraped surfaces, appear very coarse and deep on these smooth ones.

The amount of metal taken off by the finer grades of emery paper is so small as to be scarcely appreciable, save that it slightly discolors the emery paper.

The finest test for plates finished in this way is to rest the lower one quite level, clean it with alcohol, wipe it clean with old linen rag and finally with the palm of the hand, which if quite dry is more effective than anything else. The eye should carefully sight the plate surface with the light reflecting on that surface, when particles too fine to be felt may be observed and wiped off with the hand. In dry weather it is a difficult matter to clean the plates perfectly, as while one is being cleaned the fine particles of matter floating in the air rest upon the other; but in rainy weather the cleaning is much easier.

The plates being cleaned one must be lowered vertically on the other where it will float, there being a film of air between the two which it is almost impossible to exclude by pressure even though the plates be moved while pressed together.

If under these conditions the surfaces are not true and the top plate be set in motion in various directions, by a light finger touch it will swing round, the parts of the surface most in contact being the centre of motion. Suppose then the top plate to swing from one end it should be turned end for end on the bottom plate, and if the location of the centre of motion is still at the same end of the top plate, that plate is high there, while if the centre of motion in both cases is at the same end of the bottom plate it is the one that contains the error.

If the top plate swings upon its own centre of motion it must be moved farther off the bottom one, first on one side and then on the other, to discover if it or the bottom plate is in error; while if the top plate swings first from one end and then from the other, one or both of the plates are hollow and the top one must again be moved farther off the lower one, and the test by motion continued. The error discoverable in this way is very much finer than can be discovered by the marks of contact, since a plate showing quite even contact when quite dry and clean, and tested as lightly and carefully as may be will show error by this motion test. The error being so small in amount that it may be corrected by rubbing the plate with rag and oil, applied under hand pressure to the plate.

To cause the plates to bind together so that rubbing one on the other will leave contact marks, the top plate must be placed about an inch over the corner of the bottom one, pressed closely to it and forced laterally over it. A pair of plates of the Whitworth pattern (such as shown in Fig. 2449) placed by the author in the Centennial Exhibition, required, when put together dry as above, 341½ lbs to *slide* the top one over the other, which was due to the friction caused between the surfaces by the atmospheric pressure acting on the back surface of the plate, the latter having a superficial area of 12 by 8 inches.

Here it may be added that a plate of the same dimensions, and having its surface finished simply by filing with a dead smooth file, which plate was made for exhibition at a lecture on hand work, delivered before the Spring Garden Institute of Philadelphia, required a force of 22 lbs. to slide on the one on which it rested.

If two plates finished by the above method be placed together by sliding one upon the other it will be found that with the hands applied as in Fig. 2449, they can be separated or pulled apart with less force than it requires to slide one upon the other, because the plates bend and unlap, as would be the case if two sheets of paper were wetted and placed together and then taken apart by pulling two edges in opposite directions. But if the power to pull the plates apart be applied at the middle of the plate it will require a much greater force to separate them, although how much is problematical, no experiments having been made upon the subject. Furthermore the friction between two such plates will be greater if the surfaces be lubricated than if quite dry.

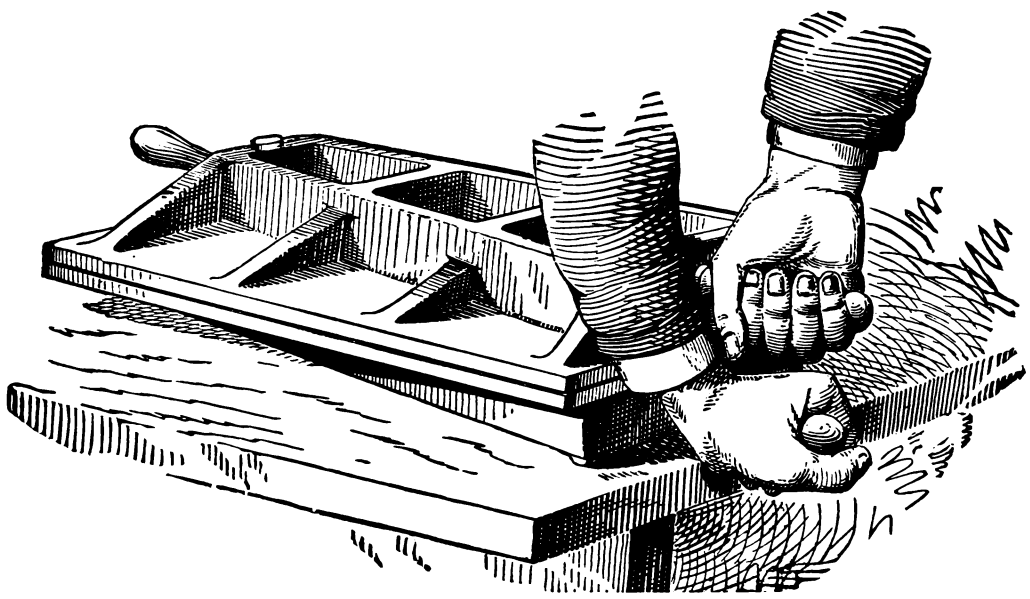

Fig. 2449.

Thus, with the surfaces cleaned by alcohol, the top plate will move comparatively easily, but if the surfaces be slightly oiled and then wiped apparently quite clean with old dry rags, the friction will be a maximum. If then a piece of rag, say of an area of an inch, have one drop of oil upon it and be then applied to the surfaces of two plates after they have been cleaned with alcohol, the friction will still be about 3 lbs. per inch of area of one plate. With the surfaces well lubricated it will still require more power to slide one plate upon the other than would be the case were both plates quite dry.

The reason of this is that when quite dry it is impracticable to exclude the air from between the surfaces, whereas with the lubrication the air is more perfectly excluded and the atmospheric pressure forces the plates together.

CHAPTER XXVIII.—ERECTING.

ERECTING.—The term erecting is applied in large work to the operations involved in fitting the parts to their places on the engine or machine, as well as to placing them upon their foundations and putting them together ready to run.

In vice work or fitting, the various parts are put together ready to be erected, each part being complete in itself, but not adjusted with relation to the others. Thus, while a link motion may be complete in itself, the length of its eccentric rods will usually require correcting when placed upon the engine. Furthermore the position of the eccentric is to be adjusted.

The boiler fittings may be complete in themselves, but will still require to be fitted or erected upon or to their places.

Erecting requires the greatest of skill, care, and judgment, in order that the work may be put together properly aligned and any defects of construction corrected in the finished machine.

In erecting a machine, as in building a house—or, indeed, as in everything that man constructs—the work must be begun at the foundation.

In a machine in which the working parts are carried and contained upon framework, such framework becomes the foundation so far as the erector is concerned.

In a stationary steam engine the cylinder and bed plate form the erector's foundation while the engine is in the shop, the mason's foundation being an after consideration.

In a locomotive the boiler is the foundation to which all the other parts are either directly or indirectly affixed.

The erector uses all the measuring tools used by the fitter or vice hand, and in addition many others, as stretched lines, the spirit-level and plumb-level. Either of these tools forms the readiest means of testing whether surfaces that are widely removed and in different positions about a machine are parallel one to the other, it being evident that all surfaces standing vertical will be parallel, or all those standing horizontal will also be parallel, one to the other.

Spirit-levels are often made of wood, which is very objectionable for the erector's use, because the lower or testing surface is apt to catch and hold particles of metal, and furthermore it is very susceptible to abrasion, and wears rapidly. It is preferable, therefore, that it be of iron or steel. The test of a spirit-level is its sensitiveness, and it is found in a properly constructed one that the bubble will move to a perceptible extent if a piece of gold leaf be inserted under one end. In a spirit-level which came into the hands of the author of this work he found the warmth of the finger when placed on its top sufficient to cause the bubble to move nearly the full length of its tube, the body of the level being a block of iron $1\frac{1}{4}$ inches square and 9 inches long. The movement of the bulb was caused by the heat of the finger expanding the top of the spirit-level and causing it to bend. To test the truth of a spirit-level, it should be placed upon a true surface, as a surface plate, and if the bubble comes to rest at the same spot in the length of the spirit tube when the level is tried turned end for end, the level is true. The test should be made several times.

The plumb-rule, though less used by machinists than formerly, is better for machinists' use than the ordinary wooden-bodied spirit-level, since it is more delicate if properly constructed. It should be formed as in Fig. 2450, the sides A A and B B being straight and parallel one to the other; C and D are two plugs of soft yellow brass let in so as to keep the line *l l* clear of the face of the level, so that there shall be no friction between them. At N are notches to secure the line, which should be as fine and as closely spun as possible.

The plumb-level, Fig. 2451, is also preferable to the ordinary spirit-level; its edges A, B must be straight and at a right angle one to the other, C and D representing brass plugs as before. The edge A of the rule or of the level should be laid upon a surface plate, and a fine line drawn on the face of these plugs with a scribing block, the coincidence of the line *l* with these marked lines testing the truth of the work.

FITTING OR MAKING JOINTS.—The best form of joint to withstand pressure is the ground joint, and next to this, but more expensive, is the scraped joint. The difference between the two is as follows:—

For a ground joint the fitting with files or scrapers is only carried far enough to bring the fit sufficiently near that it may be

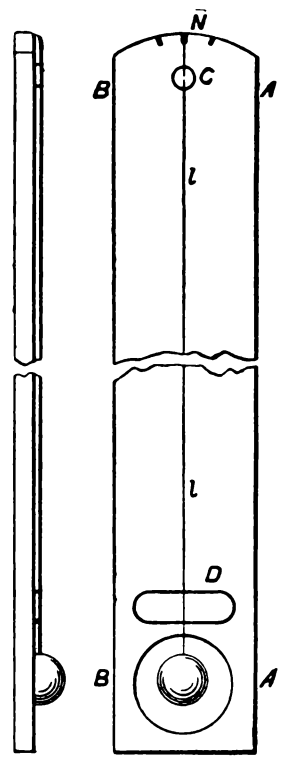

Fig. 2450.

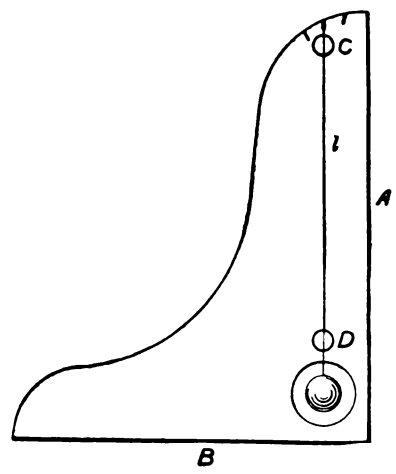

Fig. 2451.

finished by grinding the surfaces by rotating one upon the other with oil and emery interposed between them.

To grind a joint it is obvious that all the bolts or studs must be removed.

In a scraped joint the scraping is carried to such a point of correctness that the fit will be tight without grinding.

Joints in new work are easily ground, because the bolts or studs being new have not become rusted in their places and may therefore be readily removed; furthermore the joint may be ground before the studs are inserted. But in the case of old joints the studs may have become so rusted to their places as to render them liable to break off in the effort to extract them, and in such case it is better in most cases to make a scraped joint, which may be done with the studs left standing in their places.

To make a ground joint, as say a cylinder cover joint, proceed as follows:—

Put a thin coat of red marking upon the joint face of the cover, and after it is coated lightly and smoothly all over, the hand should be passed over the whole surface marked, because any grit left on the surface will cut the faces of the joint when they are rubbed together to fit them, and there is no wiping material that will so effectually clean dust from the surface as the hand will; and furthermore, the sense of touch will instantly detect any grit present. The cover may now be put into its place on the cylinder and rotated back and forth a turn or so to insure that it is properly seated; then we may strike it a light blow in different

places with a piece of wood or the end of the handle of the chipping hammer; and if the cover does not fit pretty closely to its seat, a sharp metallic sound will be distinctly heard when the blow is struck over the parts of the face that are much out of true. Hence, by striking the blows all around the flange, we can easily find not only the high and low spots, but can determine, after a little practice, by the degree of the sound, how much the faces are out of true. We next rub the cover back and forth on its seat, so that the marking on the cover will mark the high spots on the cylinder face. If, however, we make the forward reciprocating movement of the cover a longer one than the backward, we shall give to it a gradually rotary as well as a reciprocating movement, and this will tell us if the face of the cover is true or not, for if the marking is removed from the face of the cover in two diametrically opposite places only, it shows that the cover itself is not true; and if the cylinder face also marks on two diametrically opposite places only, it is proof that both the faces are a good deal out of true: but there is no knowing which one is the most out, and so we must file off each an equal amount. If either face marks in more than two places it is evidence that it is pretty nearly true, and it follows that that face does not need much filing. Here it becomes necessary to state why the movement of the cover must, when being tried to its place, be back and forth, as well as rotated by the movement already explained. If we revolve a radial surface of metal upon a similar surface they are extremely liable to cut or abrade each other, and the presence of the least grit will inevitably cause them to cut; and if cutting once begins, the metal gathers upon the cutting part, increasing its size so that the groove cut will get deeper until a complete revolution has been made, and this rule applies to all revolving surfaces, but more particularly to radial or conical ones.

By making the movement a partly reciprocating one we destroy this tendency, and either imbed the grit into the iron or else work it out. To proceed, however. If during our testing the blows induced a secondary and metallic sound as above described, we take a rough file and ease the high spots on both the cover and the cylinder face, filing a good deal off the face that shows diametrically opposite bearing spots only, and but very little off the face that shows three or more bearing spots. In this latter case, indeed, it is better to use a second-cut than a rough file. We next wipe both faces quite clean, apply the marking to the cover as before, and try it to its seat again; rubbing it in the same manner to its seat and testing it for the metallic sound as in the first case. So soon as this sound ceases we may take a second-cut file and fit the faces until they bear in at least four different places, when a smooth file should be used and the fitting and trying continued, until a very light coat of the red marking will show both the cover and the cylinder face to mark in spots not more than an inch apart; and we may then take a flat scraper, ease away the high spots, pressing the scraper firmly to its work and making it cut fine scrapings, using the scaper in strokes of about $\frac{1}{2}$ inch for a large face and $\frac{1}{4}$ inch for a small one. When the two faces show about an even contact all over, the grinding may be performed as follows:—

The two faces must be wiped quite clean, and then with an oil-can we can run a line of oil around both the cylinder and cover faces, and then with the fingers sprinkle on them some dry grain emery, of a grade of about 50 for a cylinder whose diameter is, say, 14 inches or over, and of a grade of about 60 to 65 for smaller diameters; if, however, only coarser grades of emery are at hand it may be ground finer by abrasion on an iron block, using a hammer face to grind it with. The emery and oil being applied, we place the cover in its place upon the cylinder, and give to it the reciprocative rotatory movement already described, continuing the movement until the cover moves so smoothly and noiselessly that it is evident that the emery has done its duty. We then take the cover off and examine the faces.

If there are prominently bright spots upon either face, denoting that the emery has not operated upon them, it will pay to take the scraper again and ease away the dullest and most frosted-looking spots, which denote that they have suffered most during the grinding operation. The difference between the spots that have been the most and those the least affected by the grinding will be very plainly visible if the faces are wiped clean. We must continue the grinding operation with this grade of emery until the marks show the grinding to have been performed pretty evenly all over the faces, and we then apply a coating of oil and emery, as in the previous operations, the latter being in this case of a grade of about 70, moving the cover as before until it revolves so smoothly and noiselessly as to indicate that the emery is no longer doing any duty. Having continued this process, applying fresh emery and oil until the face appears true, we may perform the finishing and testing process, which is of the utmost importance, since it will detect the faintest possible defect in the job. Wiping the faces quite clean, we put the cover in place upon the cylinder again, and move it as before back and forth, and yet slowly advancing; but it must be borne in mind that if the cover makes the least jarring noise during the operation we must at once remove it and wipe it clean again, or the faces will abrade and become destroyed. There is no danger of this, however, if the cover be at once removed when the jarring sound is heard. If it be not heard, we continue the operation until the cover has made four or five revolutions, and then remove it, and we shall find that the emery and oil, which had impregnated the surfaces, have worked out. We again wipe the faces clean and put them together and rub one upon the other as before, bearing in mind that if the faces cling much one to the other, we must wipe them clean again. Usually the finishing process requires performing about three times, and then the faces will have become as bright and clear as a mirror, magnifying the slightest defect in the joint. Joints made in this way will stand any pressure without leaking (unless the pressure be so great as to spring the metal of the cover). It is well, however, when making the joint, to put a little oil or pure tallow on it, and it is from this that it is called in England a grease joint, while in the United States it is termed the ground joint. It is common, however, in England to finish the whole joint by scraping; but this is a much more tedious job, and not so good a one, after all. Here it becomes necessary to remark, that in order to be able to handle the cover readily, it is best to bolt to it a wooden lever overhanging both sides of the cover, and to serve as a handle in moving it. And during the grinding we may place a weight on the cover, which will greatly expedite the process. It would appear that this is a long job, but such is not the case; indeed, a 16-inch cylinder face and cover $\frac{1}{32}$ inch out of true one with the other can be got up in half an hour.

It is to be observed, however, that the cylinder cover that contains the stuffing box for the piston rod often carries one end of the guide bars, and in any event carries the gland whose bore requires to stand in line with the cylinder bore. It must be remembered that if more is filed off the top than off the bottom of the face, or *vice versâ*, the gland bore may be thrown out of parallel with the cylinder bore, and the guide bar seatings will be thrown out of parallel in the same direction.

To facilitate the making of ground and scraped joints it is preferable that the surface of the joint, both on the cylinder and the cover, project from the rest of the flange, from the bolt holes to the bore in the one case, and from the bolt holes to the body in the cover in the other, so that the bearing surface of the joint shall extend from the inside edge of the bolt holes to the cylinder bore only. This provides ample surface to make a joint, while reducing the surface to be operated upon.

TO MAKE A SCRAPED JOINT.—Let us now suppose that the studs are in their places, and it is decided, for fear of breaking them in taking them out, to make a scraped joint, and the process is as follows:—

The testing and marking of the high spots or places must be made by giving to one of the surfaces a light coat of red marking and then bolting up the cover moderately tight, screwing up the nuts at first until they just grip the work all around, and not letting one part of the cover face bear at any time with greater pressure against the cylinder face than there is on the diametrically opposite side of the cover, for the side under most pressure will receive the marking most readily. Especially is this the case when the two faces first meet, because even a low part of the face will show most contact under such circumstances, and then easing such marks away will make the

cover a worse fit than it was before. When the cover is bolted home, the marking on the cylinder face may be made to transfer itself on to the high spots of the cylinder cover face more plainly if a piece of wood be placed on the cover and struck lightly with a hammer, moving the wood around and between the studs. If the wood be struck heavily it will cause an almost endless and assuredly a faulty job, because the force of the blow will spring that part of the cover to its seat on the cylinder face, whether it fits in that particular spot to its seat or not, and hence the filing or scraping may be done in places where it is not required, because the marking misleads. If the bolt holes are very close together, as in English practice, lightly striking the cover will prove an assistance; but where they are several inches apart, as in American practice, it is better to omit it, for the bedding marks will show plainly and properly if the marking be evenly distributed by the hand over the cylinder face, and the cover is bolted at each trial tightly to its seat, providing of course that the red marking is free from grit.

In a job of this kind it is difficult to know, when a leak occurs, whether the defect is in the cylinder face or the cover, and it is very desirable to perform the operation with a view to correct the defect rather than bed one face to the incorrectness of the other.

If then the stud holes are equidistant apart and concentric (so as to permit it), the cover may be tried on in one or two positions, and if the bearing marks occur on the cover at each trial in the same places it is the cover that is out; or if this occurs on the cylinder face, it is that face which is out. Since the studs are in their places the cylinder face may be best operated on by a scraper, while for the first part of the operation on the cylinder cover a file may be used. The corner at the junction of the cylindrical part of the cover (where it fits into the cylinder bore) should be scraped well clear, or it will be apt to bind on the edge of the cylinder bore and prevent the cover from screwing fairly home to the cylinder face. The joint should be made to bed well inside of the bolt holes, and coated with oil or grease when finally put together.

JOINTS FOR ROUGH OR UNTRUE SURFACES. — The most permanent form of joint for a rough or untrue surface is, for steam pressure, a gauze, and for water pressure, a pasteboard, or a duck or canvas joint.

A gauze joint is composed of copper wire gauze, having square meshes of about $\frac{1}{32}$ inch square; this gauze is cut out to fit over the joint surfaces, a single, double, or treble thickness being used according to the unevenness of the surfaces. A coating of red-lead putty is first spread over the joint with a piece of smooth surfaced metal; the wire gauze is then put on, and over it another coating of red lead; the cover is then put on, and the nuts screwed lightly home so as to bring the cover to bear against the red lead. Then any nut may be given a quarter or a half-turn, and the diametrically opposite one also given a half-turn, this process being continued until all the nuts have been screwed home a half-turn, when the process may be continued until the nuts are screwed firmly home. This is necessary, because if the nuts on one side are screwed home in advance of those on the other, the red lead on that side may be squeezed out too much and the joint will leak. In joints of this class the surfaces being rough it is not unusual to cut out the gauze wire as follows: Lay the sheet of gauze over the joint and cut it to the size by lightly hammering it over the sharp edges of the joint, which will cause the sharp edges to cut the copper wire. To cut out the holes place the ball piece of a hand hammer on the wire and over a hole and strike the hammer face several light blows, and the corners of the hole will cut the wire through.

The gauze joint will answer equally well for hot water as for steam joints, provided that it be given time to dry and become hard. If the joint can have a week in which to dry the red-lead putty may have about one-sixth of its bulk of white lead mixed with it, being made to a consistency of soft dough so that it will spread easily; and the amount being sufficient to fairly cover the gauze and no more, the soundness of the joint may be known by the lead squeezing out all around the joint edge as the bolts are screwed home. If the joint is to be used in a day or so after being made, the white lead should be omitted. In either case the lead should be mixed stiffly at first; the best lead should be used and it should be well hammered on an iron block, after which it may be thinned with boiled oil, or with a little varnish, which will cause it to harden more quickly.

For water joints requiring to stand high pressure, and to be used as soon as made, a paper, pasteboard, or a duck or canvas joint are best. The joint is made by using, in place of the gauze wire, one or two thicknesses of the pasteboard, duck, or canvas, cut out to the size of the flange, and with the necessary holes to receive the standing bolts and leave the bore of the pipe clear. If the flange of the joint is of copper, brass, or wrought iron, or, if of cast iron, is of sufficient strength to permit it, one disk may be made the full size of the flange, and a second may be made to have an external diameter sufficiently large to fit snugly inside of the bolt holes, which will form sufficient thicknesses if the flange is a fair fit to its seat; if it is not, however, three, or even four, thicknesses may be used, in which case at least one of them should fit inside the diameter of the flange across the bolt holes, as described. The disks being prepared, we spread on the first one a thin coating of red-lead putty, and then lay another canvas disk on, again adding the putty until the whole is completed. We then spread a thin layer of the putty around the hole of the seat and that of the flange, place the disk in position and screw the joint up, tightening down the nuts until they bring the flange to an equal seating all around and not sooner on one side than on another, for in that case the red-lead putty will be squeezed unevenly, and too much on the side screwed up to excess. The nuts should be screwed up very tight; the joint wiped, the protruding canvas cut off, and the joint is complete.

For very rude and rough joints, whether used under pressure or not, we may make, for either water or steam, a joint as follows: Taking four or five strands of hemp, we saturate them with a coating of white lead ground in oil, applying just sufficient to make the fibres of the hemp cling well together. We then plait the strands and coat the whole rope thus formed with red-lead putty, and place the strand around the hole of the joint, taking care that the ends lap evenly, so that the joint shall be of even thickness. It is better, however, to bend a piece of lead or iron wire to suit the size and shape of the hole in the joint, and then wind the hemp and red lead around the wire. And in cases where the flanges of the joint are sufficiently strong to have no danger of their breaking from the pressure due to screwing up the nuts, the piece of lead wire, if given a neat butt joint or neatly lapped, may be employed without any red-lead putty or hemp; this does not, however, make a good permanent joint. In cases where a joint requires to be made thick to accommodate the length of the pipe, pasteboard may be used in the place of canvas, giving to it a thinly-spread coating of red-lead putty on each side, and, if possible, leaving the pasteboard a trifle too thick and springing open the flanges of the joint to get the pasteboard into position without scraping off the red-lead putty.

Where it is required that a joint stand great heat or fire, asbestos board, about $\frac{1}{16}$ inch thick, makes a good and permanent joint. It is coated with red lead mixed thinly with boiled oil, containing as much as it will soak up, leaving a thin layer of the lead upon the surface of the asbestos. The holes for the bolts to pass through in the duck, canvas, pasteboard, or asbestos joint should be cut large enough to well clear the bolts.

For cold water, where it is not subject to great variations of temperature, common sheet lead makes a very good joint; but under excessive changes of temperature the expansion of the pipes will soon cause the sheet lead to squeeze out and the joint to leak.

Joints are frequently made with copper wire rings, made of a diameter to pass around the hole of the joint and lie within the diameter of the bolt holes, and brazed together at the ends; but if the joint be rectangular instead of circular the wire must either lie in a recess, or else a shoulder must be left for the wire to abut against, which will prevent its blowing or becoming forced out by the pressure.

In some practice softened sheet copper about $\frac{1}{32}$ inch thick is

used to make joints on surfaces that have been planed. Joints of this kind are used for locomotive steam chests.

Rubber joints are used to make steam, water, and air-tight joints, and are usually made from what is known as combination rubber—that is, sheet rubber having a linen or other web running through it; with one such web it is called single, and with two webs two-ply, and so on. There is in many cases, however, an objection to this form of joint, in that it compresses; and hence in the case of the steam chest, for example, it affects the distance of the slide-spindle hole in the chest from the seat, and throws it somewhat out of line with the eccentric. In long eccentric rods the variation is of course minute; but still it exists, and must exist, since it is impossible to tell exactly how much the rubber will compress in making the joint. Furthermore, if it is required to break such a joint, the rubber will very often cling so tenaciously to the seat in one place and to the chest in the other, that it will tear asunder in breaking the joint. To obviate this as

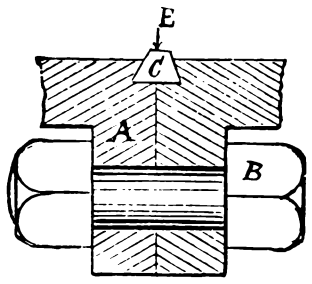

Fig. 2452.

much as possible, however, we may chalk the rubber on one face and slightly oil it on the other, so that the oil will aid the rubber in clinging to one face, while the chalk will assist it in separating from the other face of the joint.

Rubber joints slowly compress after being under pressure a day or so, and also if subjected to heat; hence they should have their bolts screwed up after becoming heated, or after having stood some time. It is advisable also that the rubber be as thin as the truth of the surfaces will admit. If it is necessary to use more than one thickness of rubber, the thickness may be made up of rings, whose diameter will just pass within the bolt holes.

The holes in a rubber gasket should be made larger than the

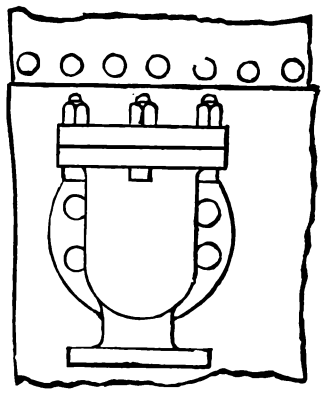

Fig. 2453.

bolt holes, so that there shall be no danger of the bolt, when being inserted, catching the gasket.

If the flanges should not come fair, and it is determined not to set them fair, the rubber should be as thick as the widest part of the opening between them, and shaved off to suit the thin side of the joint, and in this case the bolts must be tightened very uniformly and gradually around the joint to secure a tight one. If there is room to shave the gasket to the amount of taper, and use in addition a ring around the bolt holes, it will make a safer job.

When the gasket requires to be split to pass it around or over a rod, it should be cut through to the canvas on one side, and a short distance off cut through to the canvas on the other side; the rubber may then be stripped carefully back from the canvas and the latter cut through and passed over the rod, when the rubber may be put back and sewed to the canvas again.

Sheet rubber with a gauze wire insertion instead of canvas makes an excellent joint.

In Fig. 2452 is shown a method of making a steam-tight joint largely employed in England, upon the steam chest joint where the cylinders of crank shaft (inside cylinder) engines are bolted together. A is the flange of one cylinder, which is bolted to the other by the bolt B. C is a strip of copper let into a dovetail groove cut one half in one cylinder, and the other half in the other. After the bolts B are all firmly screwed home, hammer blows are delivered upon the top of the copper strip as denoted by the arrow

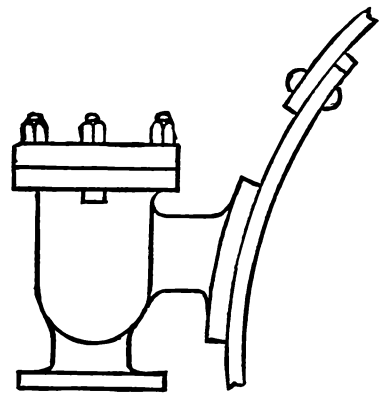

Fig. 2454.

E, expanding the copper so that it completely and closely fills the dovetail groove, and makes a steam-tight groove.

In riveting the copper it is necessary to hammer it evenly all along lightly, and only sufficiently to make it closely fill the groove, otherwise it will spring the joint open, and cause it to leak, notwithstanding the bolts B, which will give under the extreme strain.

Temporary joints are sometimes made by bending a piece of lead wire into a ring or frame, of such a size as to well clear the inside of the bolt holes. The ends are neatly joined, and the lead wire compressing and accommodating itself to the inequalities of the surfaces forms a joint.

JOINTS FOR BOILER FITTINGS.—Let it be assumed that the casting shown in Figs. 2453 and 2454 requires to be fitted to a boiler, both being new. In this case, the holes for the studs or bolts should first be drilled in the flange of the casting, which will reduce its weight and render it easier to handle. The casting should then be held against the boiler in its proper position and location; and, with a fork scriber whose width of points is equal to the widest space between the face of the casting flange and the boiler, pass the fork scriber around the fitting or casting with one point against the boiler shell and the other pressed against the edge of the casting, the result being to mark around the flange of the latter a line exactly following the surface or contour of the boiler, and at a distance from the boiler the nearest that will suffice to properly bed the casting to the boiler surface, or, in other words, the line that will exactly mark the amount of metal requiring to be cut off the flange face to make it bed all over; and that face may, therefore, be cut down to the line. In chipping and filing it, however, the straight-edge may be used to advantage as follows:—

Suppose the casting flange to be gripped in the vice facing the operator, as in Fig. 2455, and that L L represents the scribed line:

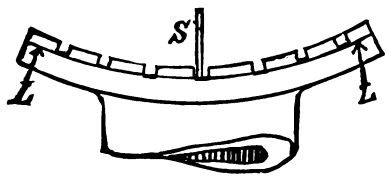

Fig. 2455.

then the cape chisel cuts may be carried clear across the flange, coming exactly down to the line on each side of the flange, while a straight-edge S may be used as shown to show when the cut is carried across level. Then, when the intermediate spaces are cut out with the flat chisel the surface will be of correct shape, and the surface may be rough filed. The casting should be cut clear down to the lines, and if the job has been properly set, marked and faced, no further trying will be necessary previous to marking the bolt or stud holes in the boiler. It is well, however, if the

operator is inexperienced in this kind of work, to again set the casting in its proper position to correct the fit. But, with proper care, all the holes in the boiler may be marked without any second fitting of the flange, since the operation properly performed is bound to give correct results. In doing a job of this kind it must be borne in mind that it is very easy to consume more time in trying and altering the job than is required under proper conditions to do the entire job; hence, in setting the casting, preparatory to marking it with the fork scriber, nothing is near enough that does not carry with it a conviction of perfect reliability; and if any doubt exists it is better to go through the process again. If the casting flange varies much in shape from its seat, and rocks or is unsteady, wooden wedges may be placed beneath it, or a few pellets of stiffly mixed red lead may be placed on the boiler where there is most room between it and the casting, the boiler surface being coated or painted with red marking, so that the pellets shall adhere to it and not to the flange face. If the casting is too heavy to be steadied by hand, one hole may be drilled in the boiler and a temporary bolt inserted to hold the casting while setting it in position, and marking with the fork scriber.

When the flange is approaching a fit, it must be placed in position on the boiler and the stud holes marked on the boiler with an ordinary scriber, its point being pressed against the boiler while it is pressed against the side of the hole in the casting flange and traversed around it, so as to scribe on the boiler surface circles corresponding to the holes in the flange. From the centres of these circles others of the proper size of the tapping holes may be struck and the tapping holes may then be drilled, and the studs put in. The remainder of the fitting operation consists in applying red marking on the boiler surface, bolting the casting to its place and filing the high spots. The marking

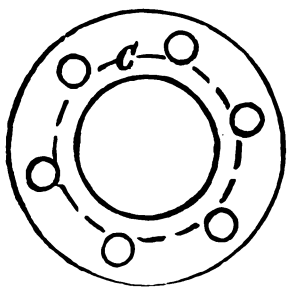

Fig. 2456.

is made to show plainly upon the flange by light hammer blows with a piece of wood interposed between the hammer and the flange face to prevent piercing the latter. These blows, however, should be lightly delivered, or they will cause the marking to be deceptive.

The fit of the flange to the boiler, however, should vary according to the kind of bolt used to hold the fitting to the boiler. If stud bolts are used they are supposed to screw into the boiler steam-tight, hence the flange may be fitted so that it has the closest contact with an annular ring extending from the outside of the bolt holes to the central hole of the flange, as shown in Fig. 2456, in which the area within the dotted circle C encloses the area to be most closely bedded. This is a highly important consideration in flange joints of every description, for, if a joint is made there, that is all that is necessary, and the fit outside of the bolt holes—that is to say from the bolt holes to the perimeter of the flange—has nothing to do with making the joint, unless the studs or bolts leak, and in that case the leak will find egress beneath the nut, unless grummets are used. A grummet is a washer made of twisted hemp, cotton, or other material, and coated with red-lead putty, and is placed beneath the heads of bolts, or under washers placed beneath nuts to stop leaks. It is not necessary to ease the flange from the bolt holes outward much, but to merely make the flange, or fitting, bed clearly and distinctly the most around the main hole, and outwards to the inside of the bolt holes; for, if there was given too much clearance, the flange would bend from the pressure of the nuts, and would in consequence spring if made of brass, or perhaps break if made of cast iron.

To make the joint, gauze wire, pasteboard, or asbestos board may be used, or if the joint is to have ample time to set, a red-lead joint without the gauze may be used; but in this case it is an advantage to cut up into pieces about ⅜ inch long, and thoroughly shred some hemp, and well mix it in the lead, well beating the same with a hammer.

To preserve red-lead putty from becoming hard and dry, as it will do if exposed to the air, it should be kept covered with water.

In some cases joints of flanges to boilers are made by riveting the flanges to the boiler and caulking or closing the edge of the flanges to the boiler shell; but this possesses the disadvantage

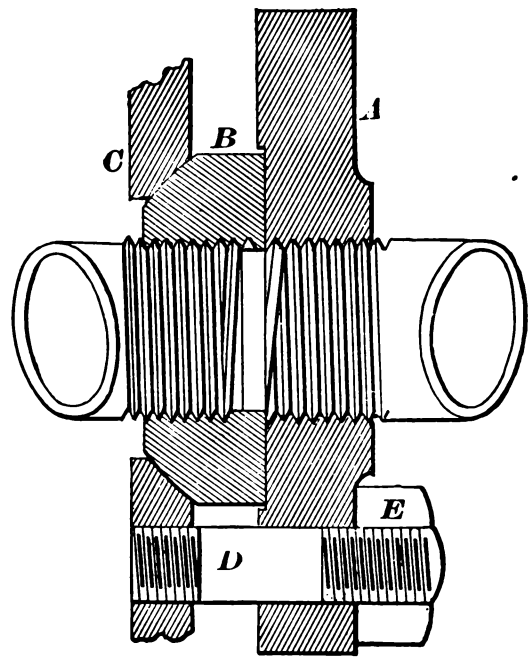

Fig. 2457.

that the rivets must be cut off to remove the fitting from the boiler when necessary, and access to the interior of the boiler is necessary in order to attach the fitting again by rivets.

Fig. 2457 (which is taken from *The American Machinist*), represents a joint for boiler fittings, designed to facilitate the breaking and re-making of the joint. C represents, say, a boiler plate, B a piece having a ball joint seat in C ground steam tight, and A a flange, say, for a feed pipe; the studs D thread permanently into C, and the joint is bolted up by the stud nuts E. It is obvious

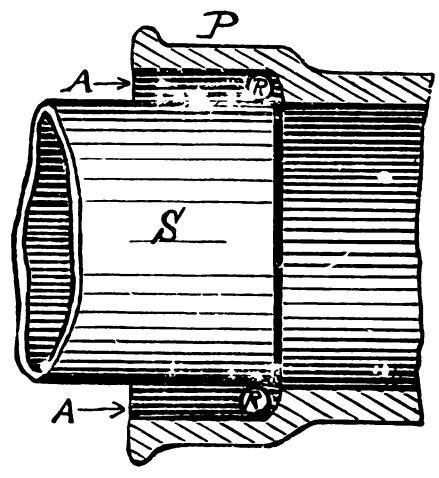

Fig. 2458.

that the ball joint between B and C permits the flange A to set at an angle if necessary.

RUST JOINTS.—These are joints made by means of filling the space between the flanges, or annular spaces, as the case may be, with cast-iron turnings, and compacting them with a caulking tool. Any interstices through which steam or water, &c., might leak become filled by the subsequent rusting of the iron cuttings, the rust occupying considerably more space than the iron from which it was formed.

Rust joints are employed upon very uneven surfaces, and for pipes for mains to go under ground. In former times this class of joints was much used in engine and boiler work, but of late years it has been to a great extent abandoned. In Fig. 2458 is

shown the method of construction for a rust joint for what are known as spigot and socket joints for pipe work. S is the spigot and P the socket. R R is a metal ring, bound over with either dry hemp fibre or tarred twine or rope. The remainder of the space between the pipes at A A being filled with a cement composed of

Sifted cast-iron borings	100 lbs.
Sal-ammoniac	½ lb.
Sulphur	½ lb.

but when required to set quickly, 1 lb. sal-ammoniac may be used. These ingredients are thoroughly mixed with water immediately before being used, and just covered with water when used inter-

Fig. 2459.

mittently. The cement is put into the space A A, in quantities sufficient to fill up about ¾ inch in length of the annular space A A, and then caulked by being driven in with the tool shown in Fig. 2459. Cement is then again put in and the caulking repeated, the process being continued until the whole space is filled.

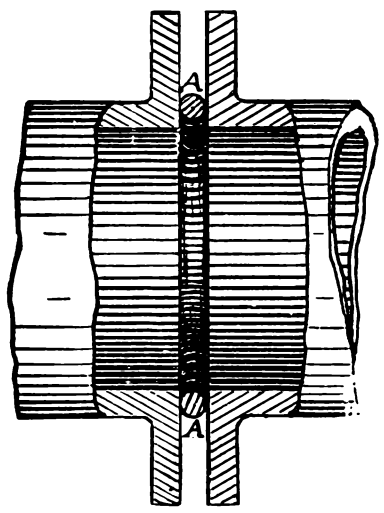

Fig. 2460.

In some cases (as in gas mains) the space A A is filled with melted lead, and when cold caulked with the tool described.

In Fig. 2460 is shown the method of making a rust flange joint; A A being a ring covered with hemp twisted around it, the cast-iron cement being caulked in as before.

The wire rings should be firmly gripped by the bolts to prevent them from moving from the caulking blows, which should be at first delivered lightly.

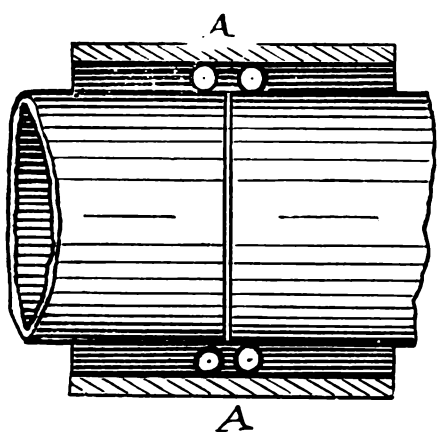

Fig. 2461.

In some cases pipes are joined with rust joints, as in Fig. [illegible] in which A A is a sleeve, there being two rings of wire and hemp inserted as shown.

When flanged joints are made with a scraper, or ground joint, or with rubber, duck, or other similar material to make the joint, the length of the pipe, from face to face of the joint, must be made accurate.

Fig. 2462 is a face, and Fig. 2463 (which are from *Mechanics*), a sectional edge view of an expansion joint, being that used by the New York Steam Supply Company for the steam pipes laid under the streets to convey steam to buildings. The object is to provide

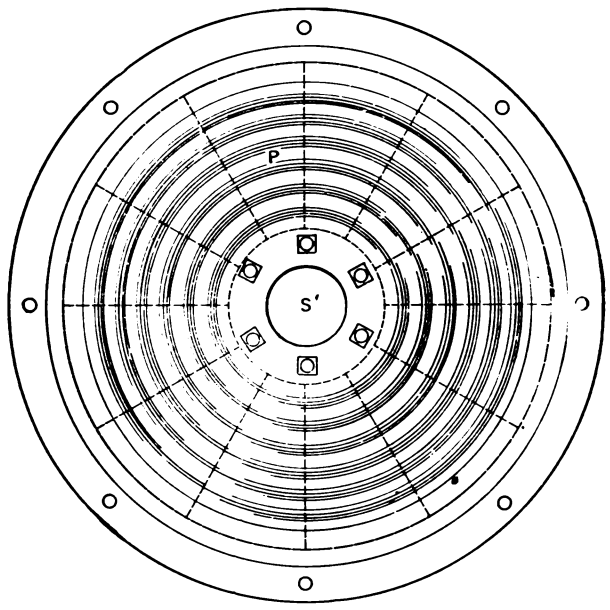

Fig. 2462.

a joint which shall permit and accommodate the expansion and contraction of the pipe under varying temperatures. P P are corrugated copper disks secured to the faces of the pipe ends by flanges, as shown, and gripped at their edges by the flanges of the cast-iron casing, and it is obvious that the ends of the pipe may move longitudinally carrying the corrugated disks with it. The cavity A is filled with steam, and to support the disks P against the pressure segmental blocks B of cast iron are placed behind them, the number of these blocks being as indicated by the dotted

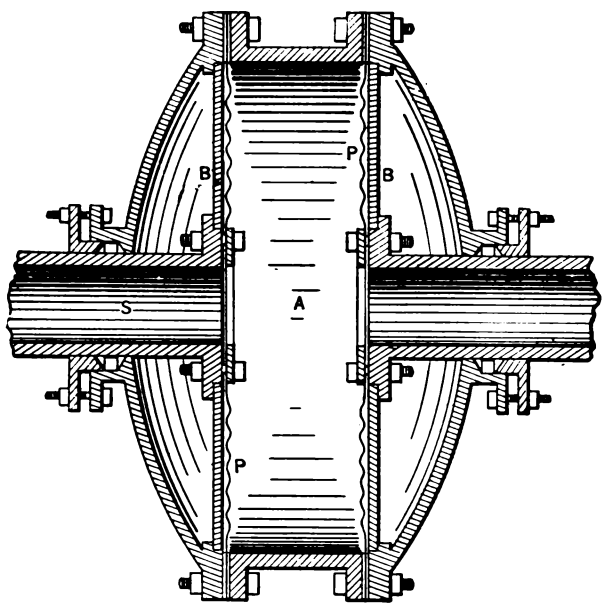

Fig. 2463.

radial lines in the figure. It may be added that this joint has been found to answer its purpose to great perfection.

Pipe cutters, for cutting steam or gas pipe by hand, are usually provided with either a rotary wheel which severs by rolling an indentation, or else are provided with cutting tools. The rolling wheel has the advantage that it makes no cuttings, cuts very readily and is not apt to break; on the other hand it is apt to raise around the severed end of the pipe a slight ridge, which with a worn cutter may be sufficiently great as to require to be filed off

before the threading dies will grip the pipe. Cutting tools are apt to break and require frequent grinding; hence, as a rule, the rolling wheel cutter is generally preferred.

Fig. 2464 represents a cutter of this kind, the piece A carrying the cutter B, which is operated in the stock C by means of the threaded handle H.

Fig. 2465 represents a pipe cutter in which are a pair of anti-friction rollers and a severing tool bevelled on one edge only so as

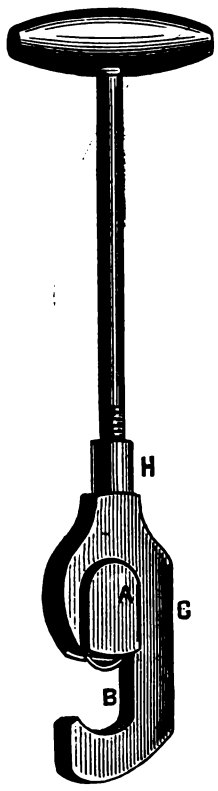

Fig. 2464.

Fig. 2465.

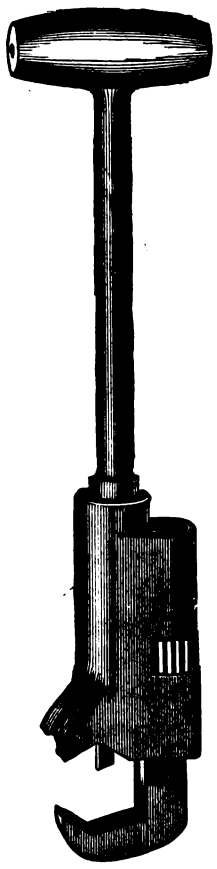

Fig. 2466.

to leave the end of the pipe face cut square, and the piece cut off bevelled on its face; or by turning the cutter round the reverse will be the case, the piece cut off being flat on its end.

The action of this cutter is, as in the case of the wheel cutter, simply that of a wedge, hence no cuttings are formed.

Fig. 2466 represents a pipe cutter in which a cutting tool is employed, being fed to its cut by the handle which is threaded similar to the handle shown in Fig. 2464. The end jaw is operated

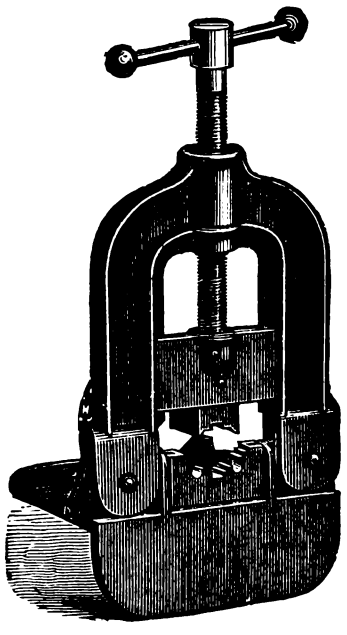

Fig. 2467.

to suit different diameters of pipe by means of the milled nut shown, which receives a threaded stem on the adjustable jaw.

PIPE VICE.—The ordinary bench vice is sometimes provided with an attachment to enable it to grip pipe at three points, and, therefore, hold it sufficiently firmly without squeezing it oval, but it is preferable to use a proper pipe vice, such as shown in Fig. 2467, which consists of a base frame bolted to the work bench and receiving a serrated die to grip the pipe. The upper die is carried to a frame pivoted on both sides to the base, and is operated to grip or release the pipes by means of the handled screw shown.

To change the dies one pivot is removed and the upper frame swung open, as in Fig. 2468.

The proper shape for pipe tongs depends upon the number of

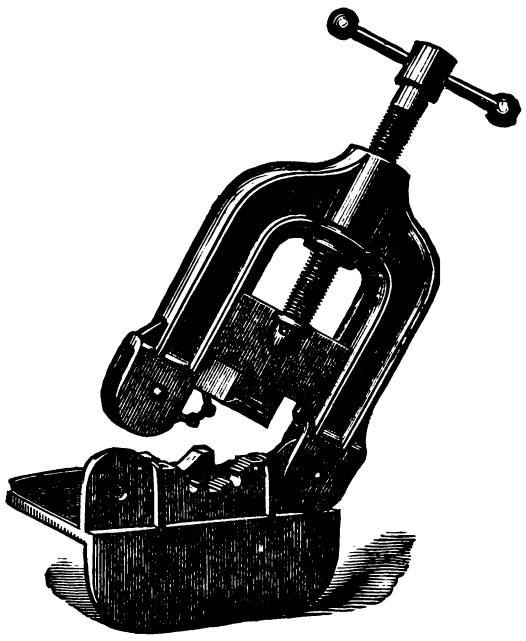

Fig. 2468.

sizes of pipe the tongs are intended for, but in all cases the point at which the gripping point should be is about as shown in Fig. 2469. This enables the edge at A to enter the work and grip it. If this point of contact were nearer to C it would be apt to slip upon the pipe, whereas, were it farther towards B, it would present a less acute angle to the pipe, which would be apt to jam in the tongs.

It is obvious that, if the tongs be moved in the direction of H, the whole power applied to F acts to cause the edge at A to grip the pipe, and that the length from A to G has an important bearing

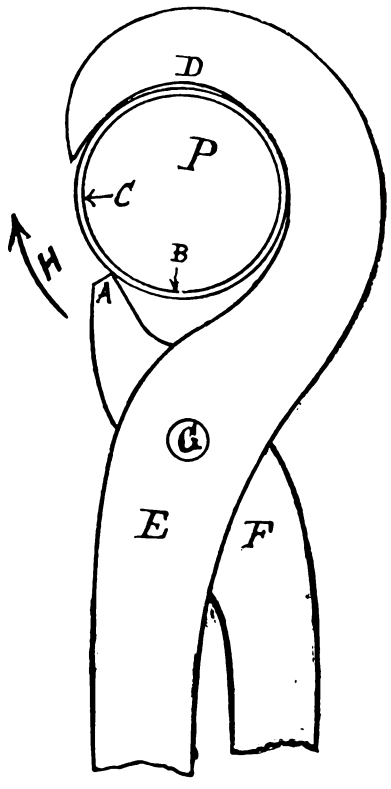

Fig. 2469.

on the grip of A to the pipe; because the nearer A is to G not only the greater the leverage of the leg F, but also the less A, with a given amount of movement of F on its pivot, endeavors to enter the pipe; hence the movement of A in a direction to grip the pipe is less in proportion to the movement of F, and has a corresponding increase of force. It follows then that the nearer the grip of A is to C, the less, and the nearer the grip to B the greater, its grip

upon the pipe. But, by making the length of A such as to grip the pipe in about the position shown in the cut, there is latitude enough in the location at which it will grip the pipe to permit of the tongs being used upon pipe of a somewhat greater or less external diameter, increasing the availability of the tongs. Furthermore, if A gripped the pipe at or too near to B, it would be apt to indent it. The crown of the jaw D may be made to fit to the pipe or to be clear of it; for thin pipe, as solid drawn brass pipe, it should fit so that the pressure will not indent the pipe, but for strong iron pipe it is better to let it clear, which will not only afford a firmer grip, but will also better fit the tongs to take in different diameters of pipe. In some cases, as in adjustable pipe tongs, the jaw surface D is, for this purpose, considerably V-shaped, as will be seen presently.

It is obvious that as A grips the pipe automatically, the tongs may be moved through any portion of a rotation that the location may render most desirable. Pipe tongs are designated for size by the diameter of the pipe they are intended for; thus, a pair of inch tongs are suitable for pipe an inch in diameter of bore, the handles or legs of the tongs coming so close together that both can be readily grasped in one hand applied at their extreme ends. If, however, the tongs be applied to pipe of a larger diameter the legs will be wider apart, and one hand will be required to be applied to each leg to force them together. A complete set of

Fig. 2470.

pipe tongs, therefore, includes as many pairs as there are diameters of pipe, unless adjustable tongs be used.

Adjustable tongs are made of various forms; thus a simple plan is shown in Fig. 2470. The gripping surface of the jaw is shaped as at V, so as to admit varying diameters of pipe, the smaller diameters passing farther up the V, the distance of the end A of jaw, or leg F, being regulated to grip the pipe in the proper place by operating the screw S, which is tapped into the jaw F and pivoted in B, the slot C enabling F to move along B. The capacity of tongs of this design is about three diameters of pipe, as 1, $1\frac{1}{4}$, and $1\frac{1}{2}$ inches. There are various other forms of adjustable pipe tongs, but most of them possess the disadvantage that the adjustable jaw hangs loosely, involving some extra trouble in placing them upon the pipe, because one hand must be employed to guide the loose jaw and adjust its position on the pipe. Fig. 2471 represents tongs of this class, the gripping size being varied by moving the jaw A upon B at the various notches. The end of B is serrated to afford a firmer grip upon the pipe. Fig. 2472 represents another adjustable pipe tongs, which is made in two parts, a straight lever A and hooked lever B, the former passing through a slot in the latter. The back of the straight lever is notched and a serrated fulcrum piece C is pivoted in the slotted lever by a pin upon which the lever B receives its support when the tongs are in operation. The fulcrum piece is provided with a spring which retains the serrated edge in proper position to engage the notches in the lever A. By means of the thumb piece D, the piece C can be moved in either direction to increase or diminish the gripping size of the tongs. When the tongs are open the lever A can be moved within the slot and adjusted so that the tongs will fit the pipe. The fulcrum piece C, being pivoted, allows the full length

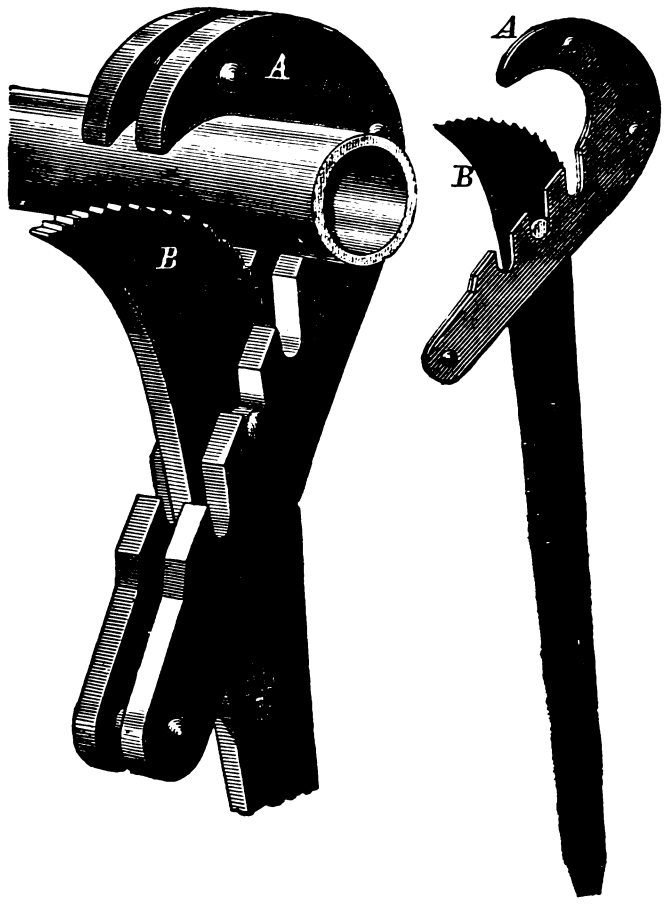

Fig. 2471.

of its serrated edge to come into contact with the corresponding portion of the lever A, so that the parts always have a firm bearing and are subjected to an equal wear.

A common form of pipe tongs of this class is shown in Fig.

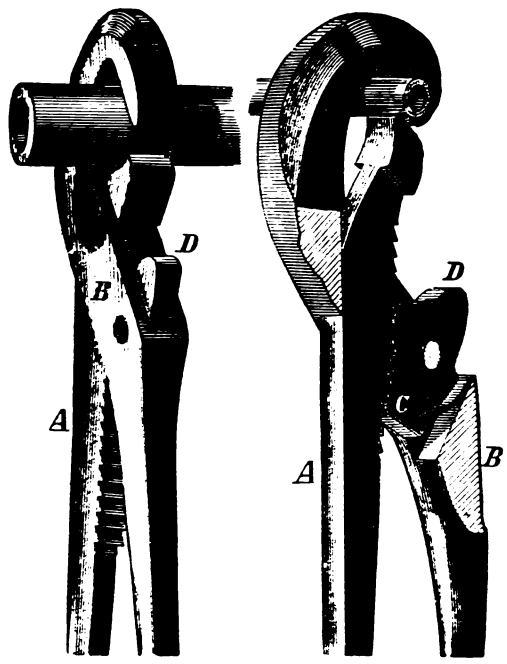

Fig. 2472.

2473, B being pivoted to A by a pin, and changing to various holes in A to suit different diameters of pipe.

ERECTING PIPE WORK.—In erecting pipe work care must be taken to have it align as true as possible, as well as to have the joints tight enough to stand the required pressure without leakage. If the elbows, tees, or other fittings are not threaded true, a pipe

whose thread is not true with its axis may be selected or cut purposely to suit the error in the fitting, so as not to leave an unsightly finish to the job.

Suppose, for example, that in Fig. 2474, *e* is a pipe erected parallel to the wall, but that the holes in its elbows are tapped at an acute instead of at a right angle, then by cutting the thread on the end of pipe *d* untrue with its axis, its far end will rotate out of true as denoted by the shaded and by the plain lines, and all that will be necessary is to screw up the pipe sufficiently firm to make the joint, but to leave it in the position shown in the plain lines.

If the pipe tightens sufficiently before it has reached that position it may generally be eased by rotating it back and forth in the elbow with the pipe tongs. If this does not suffice, the pipe must of course be threaded sufficiently further along. To cut a pipe out of true to suit an untrue elbow, a very good plan is to cut the end of the pipe at an angle to its axis, which will cause the dies to cant over when starting the thread, but little practice being required to educate the judgment as to how much to do this to suit any given degree of error.

In erecting pipe it is best to begin at one end and screw each successive piece firmly home to its place before attaching another, so that the lengths of the pieces may be accurate and not vitiated by screwing them up and causing them to enter farther into the

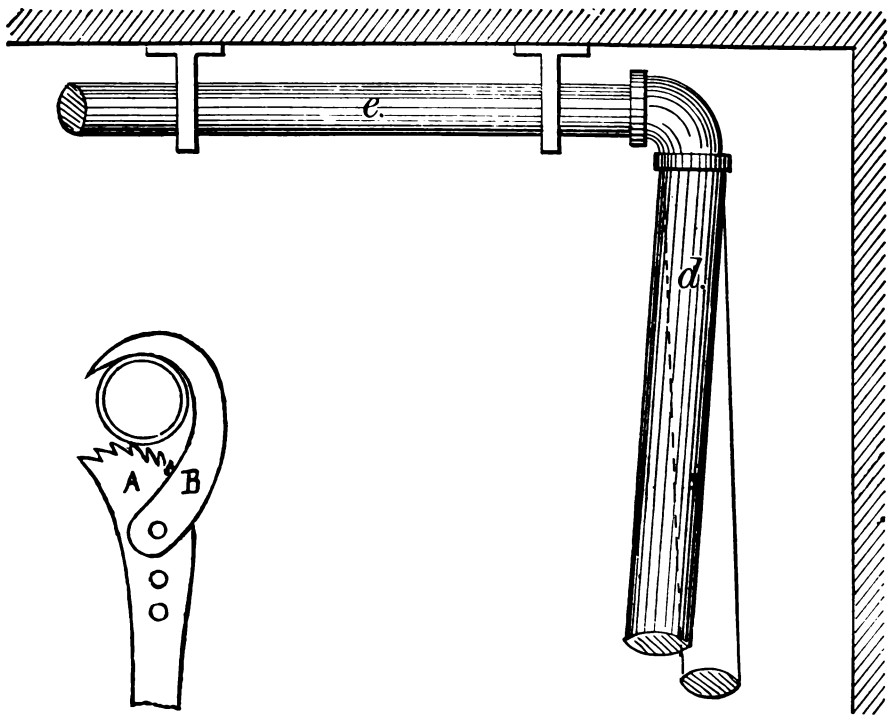

Fig. 2473. Fig. 2474.

fittings. If it is probable that the piping may have to be taken down after erection, it should be put up at first screwed together rather tighter than will be necessary, as the thread fits become eased by being moved one within the other. This is especially the case with brass fittings, upon which it is best in cutting the lengths of pipe to have it of full length, as the threads will conform to each other sufficiently to cause the pipe to enter a thread or so farther if the pipe be rotated back and forth a few times in the fitting.

The fit should in all cases be made by tightness of thread fit, and not by the union or elbow face jambing against the end of the thread or the pipe, as joints in which this is the case will usually leak if used under pressure.

The thread of both the pipe and the fitting should be smeared with a thick lead paint. If the pipe is to be used as soon as erected, plain red lead and boiled oil should be used for the paint; but if it may stand a few days it is better to mix white and red lead in about equal quantities, as this, if given time to dry, makes a tighter job. The quantity of this paint should not be more than will thinly cover the threads, otherwise it will squeeze out when the pipes are screwed home, and falling from the end of the pipe within the fitting be apt to be carried by the steam or water to the valves, and getting between them and their seats cause them to leak. The iron cuttings should be carefully cleaned both from the pipe and the fitting for the same reason.

In cases where the piping may require to be used under heavy pressure as soon as erected, it is a good plan to use dry red lead in varnish, thoroughly hammering it to mix it well. and thinning it after it has been so hammered.

In case of emergency a loose pipe may be somewhat improved by wrapping around its thread a piece of lamp wick saturated with this varnish lead, beginning at the end of the pipe and wrapping the thread from end to end.

It is preferable that the stem of the valve stand nearly horizontal, so that any water of condensation may pass freely away with the steam and not collect and lie in the pipe as it does when vertical. If it be quite horizontal the water of condensation will drip through the stuffing box; hence it is better that it stand 10 or 12 degrees from the horizontal.

It is better in all cases to purchase nipples than to make them by hand, because when made in a machine the threads are more true to the axis than those made by hand; especially is this the case in short nipples in which there is not sufficient length to use the guide socket when engaged in threading the nipple with the hand dies.

It is a very good plan in making such short nipples to cut them off the end of a length of pipe that has been threaded by machine, and to screw on the threaded end a coupling. Into this coupling a piece of pipe may be threaded to afford a hold in the vice. If then the nipple is long enough, a guide to suit the size of the nipple may be used in the threading dies, or a guide socket to fit the diameter of the coupling may be used.

A globe valve should be so placed on the pipe that the pressure will, when the valve is closed, fall on the bottom face of the valve, so that the steam may be shut off while the valve stem is being packed.

Cotton lamp wick plaited to fit the packing space, and well oiled, is as good as anything to pack the stem with.

In taking old pipe down a refractory joint may be sometimes loosened by striking it with a hammer while it is under full pipe tongs pressure; or these means failing, the elbow or tee may be heated, which should be done as quickly as possible, so that the fitting may be hotter than the pipe. A very good method of doing this, where it is desired to save the fitting, is to pour red-hot lead over the fitting.

If it is not important to save the fitting, it may be split by a flat chisel, or by cutting a groove along it with a narrow cape chisel; or if the pipe is free the elbow may be rested on an anvil and hammered around its circumference, which will either free it or break it, if of cast iron.

When pipes are to be taken down and re-erected elsewhere they should all be marked to their fittings and places before being taken down, as this will preserve their lengths as near as possible for re-erection. Black japan is an excellent marking for this purpose because it dries quickly.

RE-FITTING THE LEAKY PLUGS AND BARRELS OF COCKS.—When a cock leaks, be it large or small, it should be refitted as follows, which will take less time than it would to ream or bore out the cock or to turn the plug, unless the latter be very much worn indeed, while in either case the plug will last much longer if re-fitted, as hereinafter directed, because less metal will be taken off it in the re-fitting.

After removing the plug from the cock, remove the scale or dirt which will sometimes be found on the larger end, and lightly draw-file, with a smooth file, the plug all over from end to end. If there is a shoulder worn by the cock at the large end of the plug, file the shoulder off even and level. Then carefully clean out the inside of the cock, and apply a very light coat of red marking to the plug, and putting it into the cock press it firmly to its seat, moving it back and forth part of a revolution; then, while it is firmly home to its seat, take hold of the handle end of the plug, and pressing it back and forth at a right angle to its length note if the front or back end moves in the cock; if it moves at the front or large end, it shows that the plug is binding at the small end, while if it moves at the back or small end, it demonstrates that it binds at the front or large end. In either case the amount of movement is a guide as to the quantity of metal to be taken off the plug at the requisite end to make it fit the cock along the whole length of its taper bore.

If the plug shows a good deal of movement when tested as above, it will be economical to take it to a lathe, and, being careful to set the taper as required, take a light cut over it. Supposing, however, there is no lathe at hand, or that it is required to do the job by hand, which is, in a majority of cases, the best method, the end of the cock bearing against the plug must be smooth-filed, first moving the file round the circumference, and then draw-filing; taking care to take most off at that end of the plug, and less and less as the other end of the plug is approached. The plug should then be tried in the cock again, according to the instructions already given, and the filing and testing process continued until the plug fits perfectly in the cock. In trying the plug to the cock, it will not do to revolve the plug continuously in one direction, for that would cut rings in both the cock and the plug, and spoil the job; the proper plan is to move the plug back and forth at the same time that it is being slowly revolved. As soon as the plug fits the cock from end to end, we may test the cock to see if it is oval or out of round. The manner of testing the cock is as follows:—

First give it a very light coat of red marking, just sufficient, in fact, to well dull the surface, and then insert the plug, press it firmly home, and revolve it as above directed, then remove the plug, and where the plug has been bearing against the surface of the cock the latter will appear bright. If, then, the bore of the cock appears to be much oval, which will be the case if the amount of surface appearing bright is small, and on opposite sides of the diameter of the bore, those bright spots may be removed with a half-round scraper.

Having eased off the high spots as much as deemed sufficient, the cock should be carefully cleaned out (for if any metal scrapings remain they will cut grooves in the plug), and the red marking re-applied, after which the plug may be again applied. If the plug has required much scraping, it will pay to take a half-round smooth file that is well rounding lengthwise of its half-round side, so that it will only bear upon the particular teeth required to cut, and selecting the highest spot on the file, by looking down its length, apply that spot to the part of the bore of the cock that has been scraped, draw-filing it sufficient to nearly efface the scraper marks. The process of scraping and draw-filing should be continued until the cock shows that it bears about evenly all over its bore, when both the plug and the cock will be ready for grinding.

Here, however, it may be as well to remark that in the case of large cocks we may save a little time and insure a good fit by pursuing the following course, and for the given reasons. If a barrel bears all around its water-way only for a distance equal to about $\frac{1}{16}$th of the circumference of the bore, and the plug is true, the cock will be tight, the objection being that it has an insufficiency of wearing surface. It will, however, in such case wear better as the wearing proceeds. Plug and barrel being fitted as directed, we may take a smooth file and ease away very lightly all parts of the barrel save and except to within, say, $\frac{3}{8}$ inch around the water or steam-way. The amount taken off must be very small indeed, just sufficient, in fact to ease it from bearing hard against the plug, and the result will be that the grinding will bed the barrel all over to the plug, and insure that the metal around the water or steam-way on the barrel shall be a good fit, and hence that the cock be tight.

The best material to use for the grinding apparatus is the red burnt sand from the core of a brass casting, which should be sifted through fine gauze and riddled on the work from a box made of, say, a piece of $1\frac{1}{2}$ pipe 4 inches long, closed at one end and having fine gauze instead of a lid.

A very good material, however, is Bath brick rubbed to a powder on a piece of clean board. Neither emery nor ground glass is a good material, because they cut too freely and coarsely, which is unnecessary if the plug has been well fitted.

Both the barrel and the plug should be wiped clean and free from filings, &c., before the sand is applied; the inside of the barrel should be wetted in and the plug dipped in water, the sand being sifted a light coat evenly over the barrel and the plug. The plug must then be inserted in the barrel without being revolved at all till it is home to its seat, when it should be pressed firmly home, and operated back and forth while being slowly revolved. It should also be occasionally taken a little way out from the barrel and immediately pressed back to its seat and revolved as before, which will spread the sand evenly over the surfaces and prevent it from cutting rings in either the barrel or the plug. This process of grinding may be repeated, with fresh applications of sand, several times, when the sand may be washed clean from the barrel and the plug, both of them wiped comparatively dry and clean, and the plug be re-inserted in the barrel, and revolved, as before, a few revolutions; then take it out, wipe it dry, re-insert and revolve it again, after which an examination of the barrel and plug will disclose how closely they fit together, the parts that bind the hardest being of the deepest colour. If, after the test made subsequent to the first grinding operation, the plug does not show to be a good even fit, it will pay to ease away the high parts with a smooth file, and repeat afterwards the grinding and testing operation.

To finish the grinding, we proceed as follows: Give the plug a light coat of sand and water, press it firmly to its seat and move it back and forth while revolving it, lift it out a little to its seat at about every fourth movement, and when the sand has ground down and worked out, remove the plug, and smear over it evenly with the fingers, the ground sand that has accumulated on the ends of the plug and barrel, then replace it in the barrel and revolve as before until the plug moves smoothly in the barrel, bearing in mind that if at any time the plug, while being revolved in the barrel, makes a jarring or grating sound, it is cutting or abrading from being too dry. Finally, wipe both the barrel and

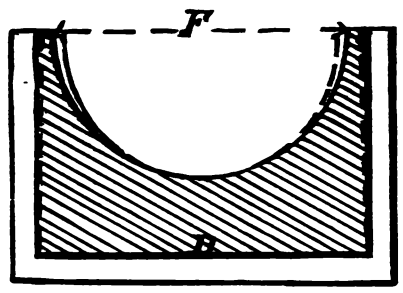

Fig. 2475.

the plug clean and dry, and revolve as before until the surfaces assume a rich brown, smooth and glossy, showing very plainly the exact nature of the fit. Then apply a little tallow, and the job is complete and perfect.

In place of the tallow a soft paste of good beeswax and castor oil is an excellent application, the two being heated in order to thoroughly mix them.

The grinding material must be frequently changed to produce smooth work, because if the grinding cuttings accumulate in it, they will scratch and score the work. Indeed, it is a good plan when convenient, to hold the cock and plug under water while grinding them, and to occasionally lift the plug out, so as to wash out the cuttings.

The surface of a well-ground plug will be in all cases polished, and not have that frosted appearance which exists so long as active grinding is proceeding, and all that is necessary to produce this polish is to well work the plug in its barrel while keeping it quite clean.

FITTING BRASSES TO THEIR JOURNALS.—Brass bores always require fitting to their journals after having been bored, because the finished hole is not a true circle, but too narrow across the joint face, as at F in Fig. 2475, in which the full lines represent the form of the brass before, and the dotted line its form after being bored and released from the pressure of the devices or chuck that held it while it was being bored. This almost always occurs to a greater or less degree, and it arises from local strains induced from the unequal cooling of the casting in the mould, which strains are released as the metal is removed (in the process of boring) from the surface of the bore. It would appear, however, that if the finishing cut taken by the boring cutter be a very fine one it should leave the hole true and round, but the pressure which is placed upon the bearing to hold it against the force of the cut prevents

the bearing from assuming its natural form until released from that pressure.

If a bearing be bored to very nearly its finished size and first released altogether from the pressure of the holding chuck, or other device, and then re-chucked, it is probable that the finished bore would be practically quite round and true, but such re-chucking is not the usual practice.

Suppose, however, that the bearing shown in Fig. 2475, be properly fitted to a journal, still improper conditions arise from wear,

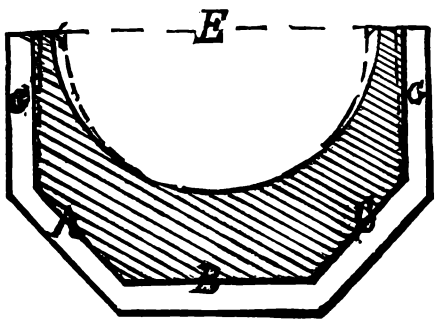

Fig. 2476.

because the area of the surface D becomes from the weight and from vibration condensed, and finally it stretches, causing the bore at F to close upon the journal and bind it with undue friction.

If the shape of the bedding part of the brass, or bearing, be such as shown in Fig. 2476, the surfaces A B and C will condense and stretch, closing the diameter of the bore at E and making the sides G G fit loosely in their places. It is to be observed that a similar condensation of the metal occurs to some extent around

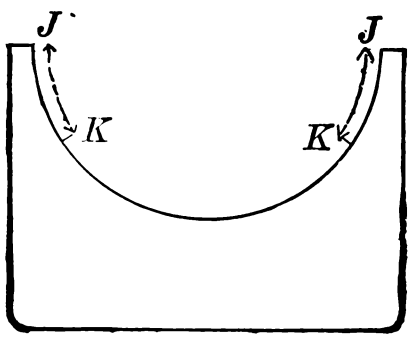

Fig. 2477.

the bore of the bearing; but this surface is being continuously worn away by the journal, and it is, therefore, at all times less stretched and condensed than that on the bedding surface.

There is, therefore, a constant action causing the brass to bind unduly hard at and near its joint face E, Fig. 2476, and thus to cause heating and undue abrasion and wear. To prevent this it is necessary to ease away that part of the brass bore, as is shown in Fig. 2477 from J to K, clear of the journal.

But in the case of bearings receiving thrust, as in engine main

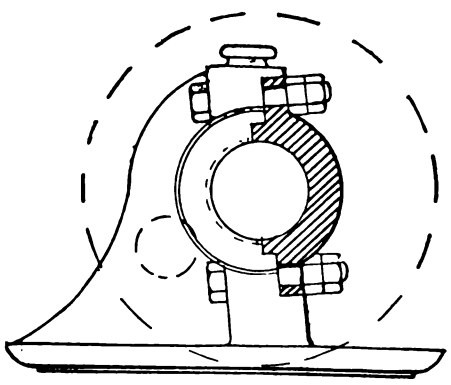

Fig. 2478.

bearings, the line of pressure is in a horizontal direction; and hence the most effective bore area to resist that pressure has been removed. Furthermore, the bearing area of the brass bore has been reduced, thus increasing the pressure per square inch on the remaining area.

The methods employed to avoid this evil are as follows:—In the form shown in Fig. 2478 the joint faces are at an angle instead of being horizontal and parallel to the line of the thrust, or the joint faces may be made to stand at a right angle to the line of journal thrust, so that the crown of the brass will receive the thrust. But the brasses will still close across the joint faces (as already described) as the wear proceeds, and the areas from J to K in Fig. 2477, must still be eased away, requiring frequent attention and giving a reduced bearing area. Furthermore, in proportion as the line of the joint faces of the brasses is at an angle to the line of thrust, the strain on the top or cap brass will fall on the bolts, so that if those joint faces be at a right angle to the line

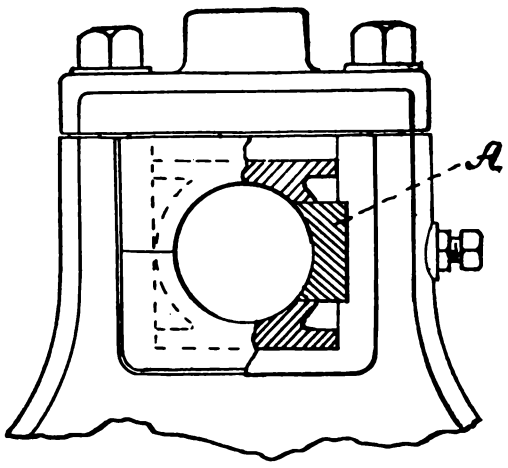

Fig. 2479.

of thrust, the whole strain of that thrust will fall on the bolts that hold the cap and cap brass.

Another plan is to make the bearing in parts, as in Fig. 2479, in which the top and bottom parts of the bearing extend to the joint face on one side, but admit a chock or gib, A in the figure, which may be adjusted by a set-screw as shown. By this means the bearing area may extend all around the bore. In some cases two of such chocks and set-screws, one on each side of the journal, are employed.

In place of the set-screws, whose ends, from receiving the pressure of the thrust, are apt to imbed themselves into the chock and

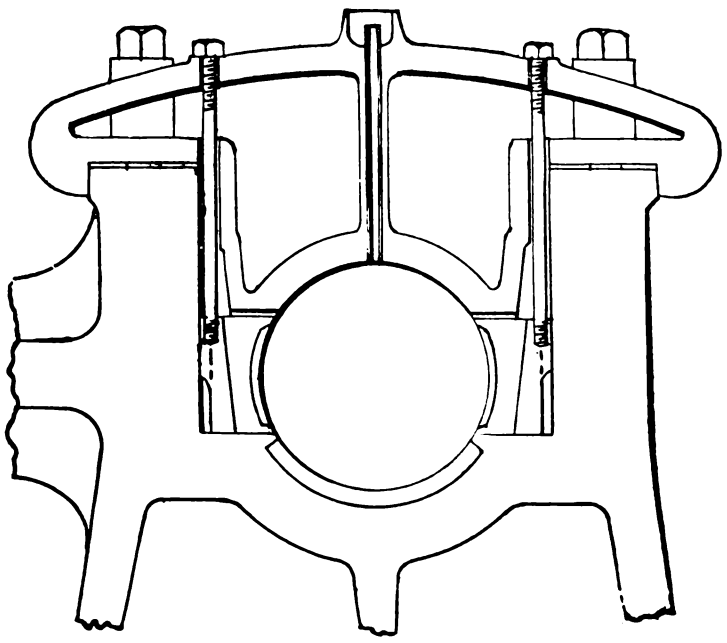

Fig. 2480.

to thus loosen the adjustment, wedges lifted by bolts passing up through the cap, as shown in Fig. 2480, are employed, being preferable to the screws.

In the Porter Allen engine the wedges pass clear through the bearing, as in Fig. 2481, so that they may be pushed up after the manner of a key and their pressure against the side chocks judged independently of the nuts at the top.

In some designs the top and bottom parts of the bearing are free to move in the line of the thrust, and the side chocks or blocks alone are relied on to resist the thrust.

When the brasses are in two halves, they may be fitted so as to have a known degree of bearing pressure upon the journal, and the fit may thus be accurately adjusted, in which case they will wear

a long time before requiring re-adjustment. On the other hand when the side chocks are used the wear in the line of the thrust may be taken up as it proceeds. In one case the attending engineer cannot alter the fit of the bearing nor the alignment of the shaft, while in the other he can do both. Thus the facilities that enable him to make these adjustments properly also enable him to make them improperly. But this would be of no consequence, providing it could be determined whether the adjustment were improving the conditions without first making it. With an engine at rest it is easy to determine, by means of the connecting

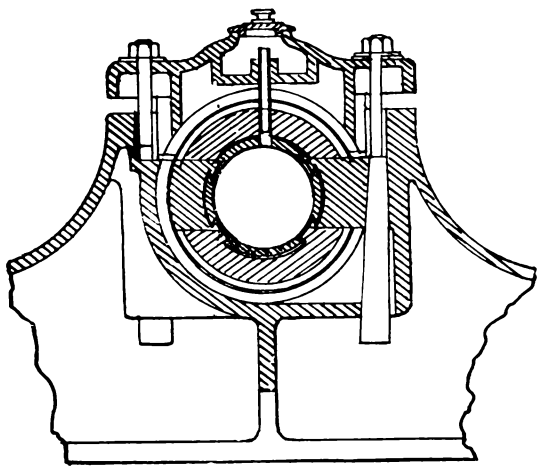

Fig. 2481.

rod, whether the chock adjustment is correct, so far as the adjustment of the shaft is concerned, but it is not easy so to determine the pressure of the chock on the journal; nor when each chock has two adjusting screws is it easy to determine when they both bear alike.

When the bearing is in four pieces, and three of them have two screws each, it is still more difficult to operate all so as to have the bearing equal on the journal. The fit to the journal can only be determined by the results: if too easy, the bearing pounds; if too tight, the bearing heats and wears.

But undue wear may take place without heating, and this is one of the greatest objections to this method of adjustment.

A design of bearing used in American locomotive practice is shown in Fig. 2482. Here the joint faces C, B of the brass is bevelled, fitting into a corresponding bevel in the box, which prevents the brass from closing across the joint face; hence, the bearing on the journal may extend all around the brass bore from the oil cavity A to the edges B C. The brass is, in this case, forced to its place in the axle box under hydraulic pressure, and this pressure springs the box open at H, making it wider; but when the box is put to work the brass compresses somewhat, and its surfaces conform more closely to the bedding surface of the box than when first put in, and this causes the box to close slightly at H.

To prevent this closure from carrying the brass with it and close it across the joint face (as in the case of the brass shown in Fig. 2476) the following plan is adopted. The brasses, after having been turned in the lathe, are filed along the entire surface (on each side) for a distance of about $1\frac{1}{2}$ or 2 inches, so as to clear the bore of the box near the bevels B, C. When the box is put into the hydraulic press, to have the brass forced in, a centre-punch mark J is made, and part of a circle L L is struck; when the brass is home in the box the arc of circle K is made, the distance between K and L showing how much the box has been sprung open by the brass; the amount allowed is about $\frac{1}{32}$ of an inch. If, as the brass is pressed in, it is found that this will be exceeded, it is taken out and eased. When the engine is running and the boxes spring to some extent they do not carry the brass with them, because the sides being eased away gives liberty to the box to come and go slightly; the bevels also tend to keep the brass bore open.

Here, then, the brasses may be fitted to align the axle perfectly, and it is not permitted to the engineer to alter that alignment, while at the same time the fit of the brass to the journal being made correct, the engineer cannot alter it. Under these conditions the whole area of the brass is effective in holding the journal, which increases the durability of the brass by keeping the pressure per square inch on the brass bore at a minimum.

If side chocks are used, however, it is better to set them up by wedges than by screw bolts, because from the tightness of the fit of such screws in the tapped holes, it is difficult to determine, with precision, with what degree of pressure the chocks are forced against the journal. Furthermore, the screws may not fit with an equal degree of tightness; hence, when screwed up with an equal degree of pressure, one end of the same chock may be set tighter to the journal than the other end, and any undue pressure of fit at either end tends to throw the shaft out of line as well as inducing undue wear. But when wedges are used to set up the side chocks the nuts operating those wedges may be an easy fit without fear of their becoming loosened (as set-screws in the line of thrust are apt to do).

On the fast engines of the Pennsylvania Railroad solid bronze boxes, without brasses, are used, and when the boxes require truing from having cut or from having worn oval they close them under a steam hammer, closing the bore across and enabling it to be trued out in the lathe without taking much metal out of the crown of the bore. The wedges and adjusting shoes are thickened when this becomes necessary by reason of the box closure or width.

If a brass bore does not bed fully and equally over the entire intended bearing area the part not fitting will at first perform no duty as bearing area, and the whole strain will be thrown upon a less area than is intended by the construction, causing undue abrasion until the brass bore has what is termed worn down to a bearing. The amount of this wearing down to a bearing may be so small as to be scarcely perceptible to ordinary observation, but if the oil that has passed through the journal be smeared upon stiff white paper, as writing paper, it will be found to contain the particles of abraded metal, which will be plainly distinguishable. Under these conditions the journal will have a dull, though perhaps a smooth appearance, and will not have that mirror-like surface which is characteristic of a properly fitted and smooth working bearing, while under a magnifying glass the journal will show a series of fine rings or wearing marks. It is necessary, therefore, that each brass be properly fitted to its journal so that it shall bed fairly and evenly over all the area of its bore that is intended to bear upon the journal.

The most expeditious method of fitting a new bearing box or brass to its journal is to first file the bore until it fits the journal

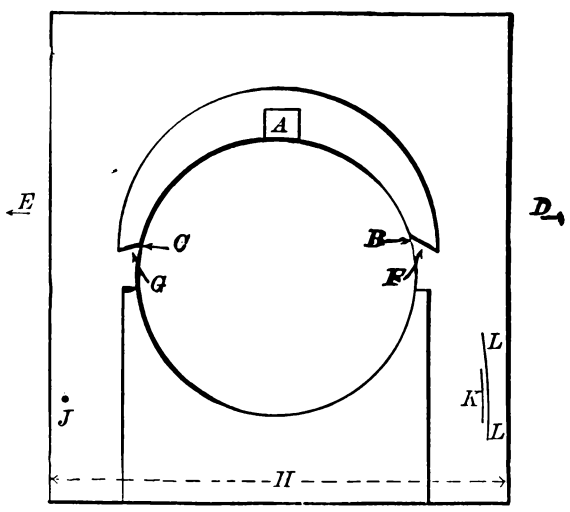

Fig. 2482.

when simply placed thereon by hand, and without going to the trouble to put the brass or the journal in position in the frame which holds them. So soon, however, as the crown of the brass beds to the journal along its whole length, the brass should be placed in its box, or in the frame, and the journal adjusted in its place and rotated so as to leave its bearing marks upon the brass bore, to assist which it may have a faint coat of red marking on its surface. The fitting should be continued both with file and scraper until the whole area of the part intended to bed fits well and is

smooth and polished. To produce this result the finishing should be done with a very smooth half-round file, draw-filing so as to leave the marks in a line with the circumference of the bore, and finally with a half-round scraper, which will remove the file marks. The degree of contact should be such that, when the bearing is bolted up, brass and brass, as it is termed (which means that the joint faces of the brasses are held firmly together), the journal will rotate as freely as when the top brass is removed, while the contact marks on the top brass have been removed by scraping. By this means the fit will be just sufficient to permit the lubricating oil to pass between the journal and the bearing, and the journal will work freely and easily without any play, knock, or pound. If, when the top brass or bearing is bolted home and the shaft is rotated by

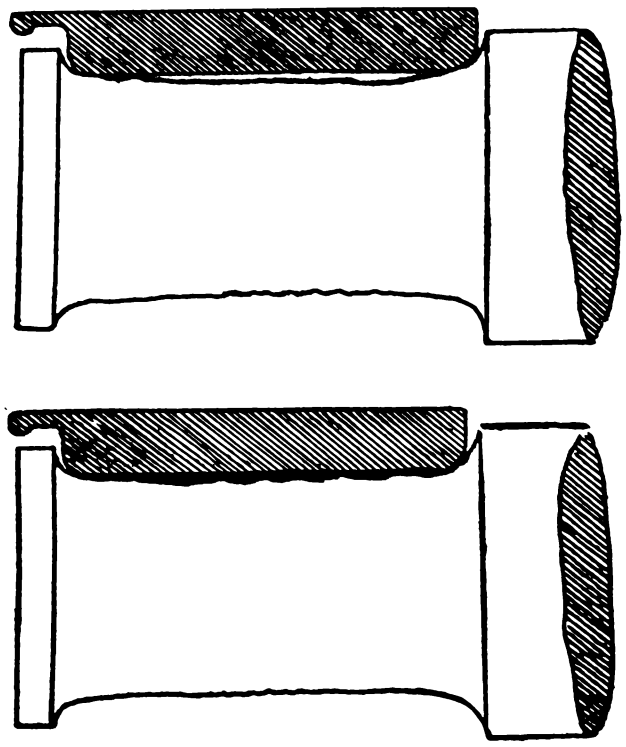

Fig. 2483.

hand, that brass on removal shows contact marks on its bore, although it may rotate comparatively easily it will be so tight a fit that the oil cannot pass, and as a result the wear, instead of producing a glossy surface, will produce a dull one, and undue abrasion will ensue even though no rings appear.

When brasses are held in rods that connect two journals together the fitting of the brass bore must be conducted with a view to have the brasses fit their journals all over the intended bearing area of their bores, which can only be accomplished by trying the brass bores to their journals while in the rod, in the manner to be hereafter described with reference to connecting rods and to lining engines.

When a journal is worn in rings, or so rough as to cause destructive abrasion and undue friction, it may be refitted as follows:—First, with a smooth file draw-file the journal in the direction of its length, taking off all the projecting rings. Then sweep a very smooth file that is somewhat worn (which will cut smoother than a sharp file) around the circumference of the journal so that the file marks will be in the plane of revolution. Then wrap a piece of fine and somewhat worn emery paper around the journal, and wrap around it (say twice around) a piece of coarse string, leaving the two ends about two feet long. Take one end of the string in each hand and pull first one end and then the other, causing the emery paper to revolve around the journal and smooth it.

To refit the bearings, first with a smooth half-round file remove the rings or rough surface, and then fit the surface with the file, so that when in its place the journal is rotated the contact marks show a proper bearing. Then draw-file the bore with a smooth half-round file and finish with a half-round scraper, easing away the high spots until the bore shows proper contact and is smooth. A piece of fine emery paper may then be wrapped around a half-round file and the surface smoothed with the emery paper moved across the bore and not in the direction of the circumference of the same. The emery paper should be well worn for the finishing and of a fine grade number, so as to leave a bright polish and not dull marks.

In some practice the bores of brasses are left rough-filed, the file marks being lengthways of the bearing of bore. If the journal requires smoothing it is draw-filed lengthways of the journal. The philosophy of this is, that the file marks will hold the oil and afford unusually free lubrication while the bearing and journal are wearing down to a bearing.

But where the framework holding the bearings and journals are rigid, these bearings and journals may, with care, be fitted to a polished and equal bearing, leaving a smoother surface than that produced by wearing down to a bearing. But if, as in the case of a locomotive, the framework is subject to torsion, rough surfaces left to adjust themselves are possibly better than those accurately fitted, because the whole framework holding the bearings changes its form when the full load is upon it and after put to work, and the fitting done when there was no load upon the parts is no longer quite correct. The lubrication of the bearing, however, should be very free, and the effort appears at present to be to afford more ample oil ways than hitherto even at some sacrifice of bearing area.

LEAD-LINED JOURNAL BEARINGS.—If a journal is worn in grooves or undulations it becomes impracticable to properly fit the brass to it without reducing its diameter to remove the rings, and to obviate the cutting and heating which necessarily follow, as well as to obviate the necessity of fitting the brasses at all, Mr. D. A. Hopkins introduced lead-lined bearings; the lead lining being merely auxiliary to the bearing proper, which is made preferably of hard bronze, and to which the thin layer or facing of lead is firmly attached by a soldering process, so that the two metals are virtually one piece. Into this lead facing the journal, under the pressure of the car, moulds or imbeds itself from the start, and afterwards gradually wears its way through it into the hard metal. The perfect fit thus secured under all conditions of the journal, aided with proper lubrication, not only prevents heating, but secures the full wear of the brasses, and makes them at all times perfect counterparts of the journal surfaces.

Fig. 2483 shows at the top an unfitted bearing without the lead lining, resting upon a worn and badly-cut journal, the only points of contact being near the ends. For obvious reasons such a journal is sure to run hot.

The engraving below shows the application of the lead lining to the same journal, the dark shading between the journal and bearing representing the lead which has been pressed into the worn and hollow surface of the journal, forming a complete bearing and distributing the weight equally upon its surface.

Fig. 2484 represents an end view of an unfitted journal and the same lead lined.

The lead compresses until the brass meets the journal and thus

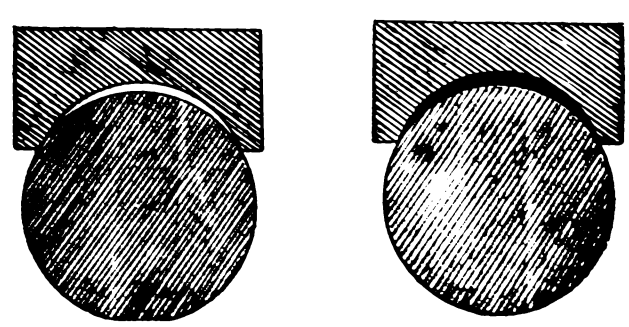

Fig. 2484.

permits between the two contact over the area that does fit or touch; while the lead fills the remaining area of the brass bore, giving it a bearing on the journal, thus relieving the touching points from receiving the whole weight of the load, and preventing the cutting or abrasion that would otherwise occur. As, however, the wear takes place the lead compresses, permitting the journal and brass to come into bearing over its full area, being obviously effective providing the bearing be kept free from grit, which would imbed in the bearing and cause it to unduly wear the journal.

If a brass is too tight a fit upon its journal, heating and abrasion, or "cutting" as it is termed, ensues. But if a brass or box does not fit close to its journal, lost motion and sometimes knock-

ing or pounding ensues. When the joint faces of brasses abut, or come brass and brass as it is termed, they should be a proper fit to the journal when they are keyed, or otherwise set up close together; hence there is no danger of either having a pound in the brass, or of heating and cutting. The objection to this plan is that the brasses must be removed from their boxes and the joint faces filed away to let the brasses together, to take up the wear; hence, in positions in which it is difficult to get the brasses out, the joints should be left open, while in all cases where they can be readily removed they should be made brass and brass.

It is to be observed that brasses that come brass and brass require less adjusting and last longer than those left open,

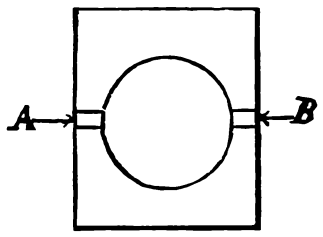

Fig. 2485.

because the latter often suffer from the abrasion due to an improper adjustment.

In brasses that are left open, it is not an uncommon practice to adjust the fit as follows: Between the brass joint faces at each of the four corners a piece of lead wire is inserted; the brasses are keyed as close home as can be upon the journals, which compresses the lead wire; the top brass is then released until the piece of lead wire can be moved freely between the brass joints.

A compromise between the brass and brass and the open joint is sometimes effected by the insertion of slips, as shown in Fig. 2485 at A, B. These slips may be taken out by simply removing the top brass, while their reduction of thickness lets the brasses together to take up the wear. The thickness for these strips may be readily obtained by means of the pieces of lead wire used as already described.

In the case of large brasses which come brass and brass, much of the filing on the joint faces to let them together may be saved

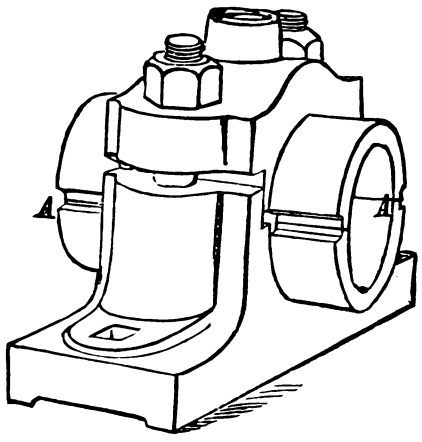

Fig. 2486.

by reducing their thickness and area by cutting away part of the metal, as at A A in Fig. 2486.

To enable the removal of bearings for renewal, or to refit them without taking the shaft out, various forms of construction are employed, of which Fig. 2487, which shows a main bearing, is an example.

Thus, when the cap is removed the side chocks, or gibs as they are sometimes called, can be lifted out by eye-bolts screwed into the holes at *c*; the weight of the shaft can then be sustained while the bottom piece D is removed.

A great deal of trouble in fitting journals and bearings may be avoided if the best conditions are observed in their manufacture. If, for example, the conditions of casting are uniform, and the diameter of the bearing bore and journal bores are constant, that is to say, when a great number of pieces are to be bored, the amount the bearings will close across the joint being definitely determined, the conditions of boring may be made such as to allow for the closure, and the fitting in this respect may be facilitated; but this applies to small bores only, as, say, three inches and less in diameter, because in larger diameters there will be sufficient variation in the amounts of contraction across the joint face to render it necessary to fit to some extent at least the bores to their journals.

In some cases slips of paper are placed between the joint faces of the bearings, or if the joint faces do not meet, slips of brass may be placed between them; or again the conditions of chucking or holding the bearings to bore them may be such as to hold them a certain amount farther apart than they will require to be when on the journal. The bore is then made sufficiently larger than the diameter of the journal that it will be as nearly as possible round after being removed from the boring machine, and will bed down fairly upon the journal without being fitted with a file, which saves considerable labor. But unless the bearings are so held as to be to some extent self-adjusting for alignment, there is liability of the axis of the bore not being quite true with the axis of the journal, the amount being so small as to escape detection

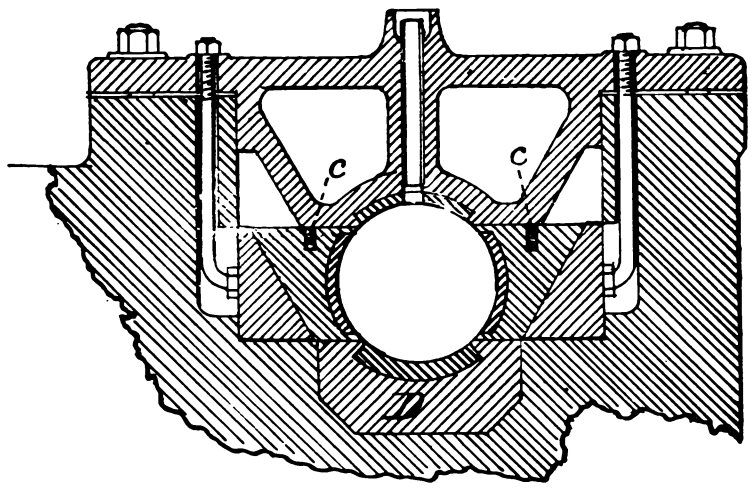

Fig. 2487.

save by trial for fit with the shaft, and the bearings in their respective positions. It is a difficult matter, in the absence of special holding devices, to chuck a bearing, especially if a long one, so true in a boring machine or lathe as to insure that its bore shall stand in absolutely correct alignment with the journal when placed in its position in the framing where it is to operate, and it is for this reason that many bearings are bored while in their frames. In some cases, however, this difficulty is overcome by so constructing the bores and the pieces holding them that the boxes may swivel and adjust themselves, as in the case of the bearings of line shafting.

Examples of the oil cavities for bearings are given as follows:—

For journals of small diameter oil cups screwing into the bearing cups, with feed-regulating devices, are generally used, and the same are used in the case of two half-brasses. But if the journals are of large diameter, as, say, 5 inches or more, oil receptacles are often cast in the caps.

In the absence of side chocks in the bearing all the oiling usually proceeds from the top, save perhaps that an oil groove may be provided in the crown of the bottom brass.

Fig 2488 represents a bearing lubricated from the top and bottom; thus in the cap is an oil cup or cavity from which passes nearly down to the bearing a brass tube containing cotton wick, which slowly feeds the oil to the bearing.

Fig. 2489 represents this tube and wick removed from the bearing. This plan of feeding is largely used on marine engines and on locomotives. When used upon stationary bearings the

cotton wick need not fill the tube, but if used on reciprocating parts it should fill so that the oil may not spill over and pass too freely down the tube. In either case, however, it is desirable to twist in the cotton a piece of fine copper wire, and bend the ends over the top of the tube to keep the wick in place in the tube.

The bottom of the bearing, Fig. 2488, is provided with an oil

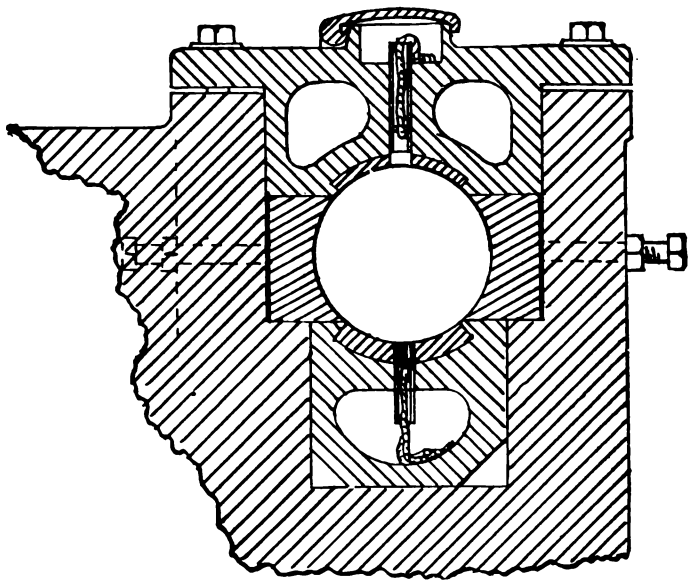

Fig. 2488.

cavity and a similar tube and wick. Usually, however, the oil is fed in at the top only, except in the case of locomotives, because in them all the weight falls on the top brass; hence, the bottom may be utilised as an oil receptacle. In English locomotive practice this receptacle as a rule merely catches the oil that has passed through the bearing box, but sometimes a roller is inserted and forced against the journal by springs so as to rotate, by friction, with the rotating journal.

Fig. 2489.

The bottom of the roller runs in oil so that the roller feeds the journal with oil, but ceases to feed when the journal ceases to rotate, an advantage not possessed by self-feeding oil cups, or by the cotton wick syphons shown in Fig. 2489.

The oil ways or oil grooves are usually provided in small journal brasses as follows:—

It is obvious that if the joint faces of the brasses are left open and oil be supplied to one brass only, a great part of the oil supplied will pass out between the joint faces before reaching the other brass, and one brass will therefore be better lubricated than the other, unless each brass be lubricated independently. Even in this event, however, a great part of the lubricating material will be lost from finding rapid egress through the opening of the brasses. This may be to some extent prevented in brasses whose joint faces lie horizontally by chamfering the edges of the bore so

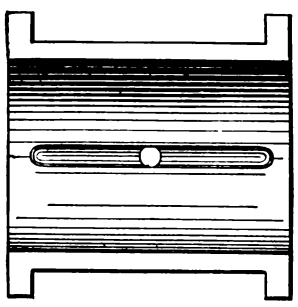

Fig. 2490.

as to form a trough extending nearly to the ends of the brass, as shown in Fig. 2492. Now it is obvious that the oil hole must always be above the journal or bearing bore; hence when the joint faces stand horizontal, the oil hole should come through the crown of the brass, and oil grooves are necessary to convey and distribute the oil along the bore. A single groove, as in Fig. 2490, is sufficient for light duty, but for heavy duty a double groove, such as shown in Fig. 2491, is necessary.

When, however, the joint faces stand vertically and come brass and brass, the oil hole may be filed half in the joint face of each brass, and the edges chamfered off as in Figs. 2492 and 2493, A B representing the chamfers and C the oil hole, the two brasses put together appearing as shown in section in Fig. 2493.

This plan has the advantage that the oil is confined within the journal, except in so far as it may in time work through the ends of the journal bore, while there are two oil grooves provided without reducing the bearing or bedding area of the brass. When

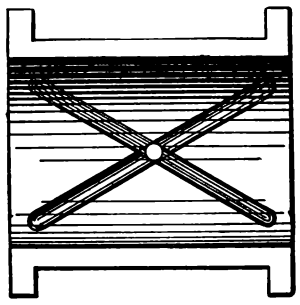

Fig. 2491.

the oil grooves run diagonally, as in Fig. 2491, there is the advantage that the length is greater, and lying nearer to the plane of rotation the oil flows along the grooves easier, being assisted by its frictional contact with the journal, but on the other hand the bearing area of the brass on the journal is so much the more reduced.

Oil holes that are not provided with oil cups should be provided with small wooden plugs, which will serve to keep the dirt and dust out; they should be made of as small diameter as the quantity

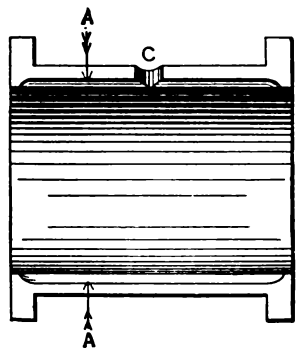

Fig. 2492.

and nature of the lubricant to pass through them will admit of, and should be left plain at the top and not countersunk, because the countersinking simply forms a dish that will collect dust, &c., which the oil applied will carry down into the bearing.

In some cases there is provided an oil dish around the oil hole, and this dish is filled with tallow that will not melt under the normal temperature at which the brass is supposed to operate. But if from defective oil lubrication or other cause the bearing

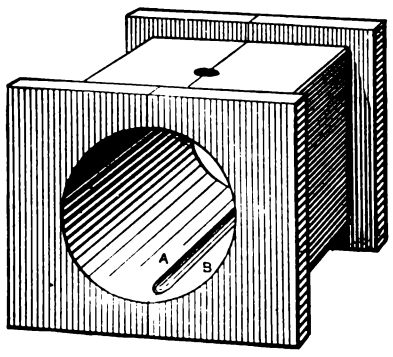

Fig. 2493.

begins to heat, the tallow will melt, and flowing through the oil hole afford the needed lubrication.

It is to be observed that the lubrication of a bearing in which the pressure is moved alternately from one half of the bearing to the other is far easier to attain, and more perfect, than in one in which the direction of the journal pressure is constant, because in the latter case the journal pressure acts to squeeze out and exclude the oil continuously, whereas when the pressure is relieved alternately on each brass, the oil has an opportunity to pass back

between the relieved surfaces. Again the lubrication is more perfect when the direction of the journal motion is periodically reversed, as the passage of the oil through the bearing is retarded by the motion, and yet again the abrasion is reduced because, as stated when referring to rotating radial surfaces, the particles of metal abraded add themselves together and form cutting pieces when the motion is continuous in one direction, whereas in a reversing motion the particles are kept separated and flow out more freely with the oil that passes through the journal.

If a shaft having a continuous direction of rotation be given end play so that while rotating it may move endwise, the particles abraded are again kept separated, and the conditions of lubrication are such as to give a minimum of wear, because the formation of fine rings or serration is avoided, the end motion serving to cause the wear to smooth the surfaces.

When a shaft has a collar that is subject to end pressure, the oil way may be carried up the face of the collar as in Fig. 2494 at B. So also where very free lubrication is required, an oil groove may also be cut in the journal itself, as at C in the figure. This plan is adopted by some American engineers upon the crank pins of steam engines, the grooves being cut on diametrally opposite sides of the pin in a line with the throw of the crank.

Referring now to the oil itself, it is generally conceded that a pure sperm or lard oil is equal to any that can be used for general journal lubrication, but the ordinary purchaser has no means of knowing if the oil is pure. The requirements of an oil for lubricating purposes are given in the following paper on testing the value of lubricants, which was read by Mr. W. H. Bailey before

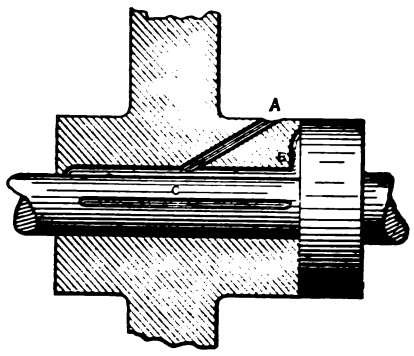

Fig. 2494.

the Manchester (England) Institution of Employers, Foremen and Draughtsmen :—

"A fact in connection with oil and lubrication is probably about as difficult a thing to describe as anything which agitates the minds of engineers and mechanical men. We appear to have very little published information on the subject, except that which describes the labors of Morin, of France, about forty years ago, and that which has been given to us by Professor Rankine more recently in this country. Those investigators who preceded Morin do not appear to have published information of very much value, or which can be used with profit for the discussion of lubricants, for their researches have been more concerning the proportions of bearings, and the value of different materials of construction, rather than the value of different lubricants.

"At the present moment so little is known generally concerning the performance of different oils, that the public are much at the mercy of the vendors of these oils, who can make almost any assertion they like without fear of contradiction.

"The valuable discoveries of our distinguished townsman, Dr. Joule, have enabled us to look upon the cost of friction and the cash value of heat as mere questions of arithmetic. Dr. Joule's investigations have been put into such forcible and elegant English by Professor Tyndall, and other students of the science of force, as to cause us to understand that when friction is produced heat is lost, and that all energy thus wasted passes away in this heat, which may be measured and valued with nearly as much facility as any article of commerce. We may gather from this knowledge, when we apply it to workshop economy, that if a pedestal or bearing becomes so hot through friction as to cause 1 lb. of water to be raised only one degree Fahrenheit in temperature in one minute, that heat has been lost equal to that which would be created by a weight of *one pound falling through a space of* 772 *feet.* We are told that if we apply this conversely, that heat has been lost which would lift 1 lb. weight 772 feet; and if we apply these illustrations still further, and imagine forty-two pedestals or bearings losing heat by friction in a similar manner, we may inform ourselves that we are losing nearly 1 horse-power, because they represent 32,424 foot-pounds of force; and if we know from our books what our coal costs, it will take very little trouble to give us the exact cash value of this friction and destructive action.

"What is friction? It may be described as the effect produced by two bodies sliding one upon the other, which have upon their opposing surfaces minute asperities, which interlock with each other. The sliding movement which forcibly removes these minute irregularities creates what we call friction. Friction is reduced when these asperities are small, and lubrication is resorted to to prevent that loss of power caused by motion under these conditions. The chief lubricants used are oil and tallow, which have a less coefficient of friction than the parts in contact. It may be well now to state that the term 'coefficient of friction' is an expression which indicates the proportion which resistance to sliding bears to the force which presses the surfaces together. There is little friction when this amounts to only one-twentieth, it is moderate when it is one-tenth, and it is very high when it is a quarter or twenty-five per cent. of the force which presses the surfaces, together, as I before said.

"QUALITIES OF LUBRICANTS.—Good lubricants should have the following qualities: (1) Sufficient body to keep the surfaces free from contact under maximum pressure. (2) The greatest possible fluidity consistent with the foregoing condition. (3) The lowest possible coefficient of friction. (4) The greatest capacity for storing and carrying away heat. (5) A high temperature of decomposition. (6) Power to resist oxidation; or in other words, the influence of the atmosphere upon them. (7) Freedom from corrosive action on the metals upon which they are used. It will thus be seen that many conditions have to be carefully taken into consideration; and further, it may be stated that an oil which may be good for heavy bearings may not be desirable for use on light spindles, and for delicate machinery like clocks and watches, where very little power is required to be transmitted beyond that of overcoming their own inertia; and also that oil which is good for small machinery running at quick speeds is very often useless for heavy pressures and large shafting. For very heavy bearings tallow and other solid lubricants are used, such as mixtures of sulphur and tallow, asbestos, soapstone with asbestos, graphite, caustic soda, beeswax, and other similar mixtures, which find favor among locomotive engineers and those in charge of heavy machinery. The pressure that can be borne by a good lubricant for a useful length of time depends upon the nature of the bearings as well as upon the lubricant itself. The velocity of the rubbing action also must be taken into consideration. The maximum of pressure that solid lubricants will bear without destruction is unknown. For steel surfaces, lubricated with best sperm oil moving slowly, 1,200 lbs. pressure per square inch of bearing surface has been found permissible. Under the pivots of swinging bridges several thousand pounds per square inch have been found to work, and for iron journals 800 lbs. per square inch should not be exceeded.

"Lubricants in the market vary much in cost as well as in quality, and very often it is found that the varying prices bear little or no relation to the value of the article purchased. Probably the best test of value is one with which I was familiar some years ago. It consisted of a small engine very much overworked, which stopped and refused to move or go at the proper speed if the shafting had not been lubricated with good oil.

"TESTING BY DESTRUCTION.—The instrument here illustrated, in Figs. from 2495 to 2501, to which I call attention, consists of a bed-plate, having upon it a piece of shafting upon which friction is created by means of two brass steps, the speed at which it is driven being about 300 revolutions per minute. The friction is brought to bear by levers and weights somewhat after the manner of a friction brake as shown in Figs. 2405 and 2500. In the top step is a thermometer for indicating any increase of temperature

caused by the friction. A small index indicates the number of revolutions that the shaft makes for any given temperature which the friction causes the thermometer to indicate. The machines used for testing oil have the friction shaft where the oil is destroyed three inches in diameter. Those for tallow are of larger dimensions. It will be seen that on ascertaining the number of revolutions which may be obtained without generating heat, or with the lowest possible increase of heat, that the value of the oil can be obtained. That oil which allows the greatest heat to accumulate

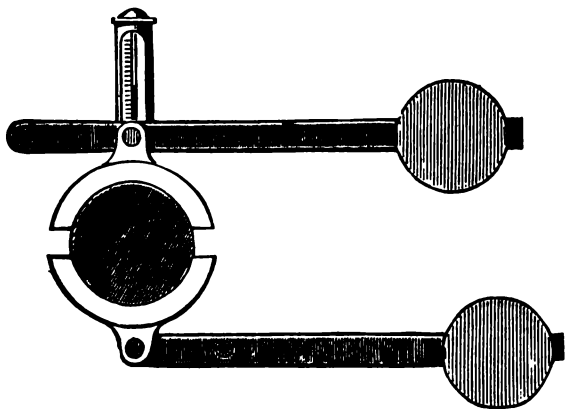

Fig. 2495.

with the fewest revolutions must be a bad lubricant. This tabular method of keeping an account of experiments has been found useful. The machine is stopped when the thermometer indicates 200 degrees, as it is considered that an oil has not much lubricating power left if it permits that heat.

Name of oil.	Price.	Revolutions to 200 degrees F.	Temperature of atmosphere.	No. of revolutions to each degree.

"When testing with this machine a definite quantity of oil should be placed on the friction roller, the top step being removed for that purpose; the quantity should be about five drops. A glass tube or small tin measure should be used, as drops vary in size according to the temperature of the oil, and also differ with the specific gravity. The inventor of this machine is Mr. Heinrich Stapfer. I believe he may be considered the inventor of the first instrument for testing oils by destroying them by friction under the actual conditions in which oils are used as lubricants. In using this machine I found that, although it was supposed to test lubricants in the way in which they are used in manufactories, a slight difference existed, which prevented accurate results.

"BEHAVIOR OF THIN OILS.—The first machines were made with the brass steps lipped or recessed, to prevent the oil running away,(see Fig. 2496), which, when thus tested, gave results very much different to those which are accepted by those who are familiar with the use of lubricants. For instance, some thin

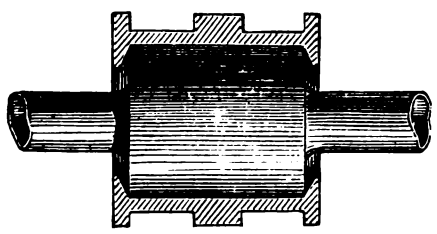

Fig. 2496.

mineral oils were found to be quite as valuable as, and in some cases superior to, sperm; and this was caused by the lips on the sides, which prevented the oil from running off the bearing when an increased fluidity was caused by friction, and by any slight elevation of temperature. This is a very important quality in lubricating oils, probably next to the capacity to resist oxidation, the most important to be criticised by those who wish to value a lubricant. Although this experiment points out to us that it may be advisable to make the journals of heavy bearings similar to these, if we wish to obtain the best results from cheap thin oils, yet, as oil should be criticised and prepared to be used on bearings with parallel necks, such as are used in works, it was considered proper to alter the tester to that shape to make the conditions similar. This illustration (see Fig. 2497) permits the oil when tested to run away from the bearing if its increased fluidity gives it a tendency to do so. It is this severe test which has enabled sperm oil to rise superior to all rivals, because it has these two apparently opposite attributes—body or thickness, which keep it on its bearing, combined with sufficient fluidity for lubricating purposes. Permit me further to illustrate what I mean in another manner. Suppose we take an oil, good as a lubricant in all other respects, and place it on a bearing, and that 40 per cent. works quickly away because of its extra fluidity when subjected to an increase of frictional temperature, and then compare it with another oil under similar conditions which only wastes, say, 5 per cent. This latter will be 35 per cent. superior as an oil having body, and even if slightly inferior as a lubricant, it may be the

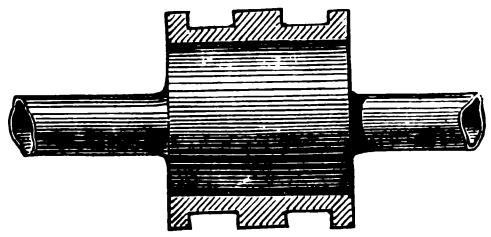

Fig. 2497.

most valuable, because strong in this one great quality of remaining at its duty when placed in position. Still another illustration will inform us that in the one case we obtain, say, 60 gallons of lubricating material out of every 100 purchased, and in the other we obtain 95 gallons.

"THE BEST METHODS OF USING THIN OILS.—This will show us that oils which are deficient in body, but which are good in other respects, may be used with good results if doled out in small quantities, as required, by automatic oil-cups like the Lieuvain needle lubricator, Fig. 2498, or any other means. Journals which cannot be fed by means of automatic oil-cups in positions difficult of access should be fed with oil which has a good body. If time permitted, much might be said of the proper shape for bearings of machinery—a subject which would lead to valuable results if discussed by the members of this Society, many of whom must have great experience of those designs which have produced the best results, as well as of those mixtures of metals which are the most durable for light high speed and heavy slow shafting. If any member will take up this subject, or if several members will read short notes, giving their actual experience of different sorts of footsteps, pedestals, and spindles, as well as of the use of different sorts of oil-cups and lubricators, it will be highly advantageous knowledge, which must be of great value to all who use machinery.

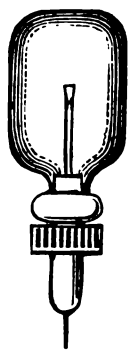

Fig. 2498.

"FLUIDITY OF OILS.—Continuing my remarks on the thinness or fluidity of oils, I wish to call attention to an ingenious arrangement for testing the fluidity when subject to a slight increase of temperature, and also for detecting any tendency which they may have for combining with the oxygen of the atmosphere; this latter quality being advantageous in oils which are used to mix with paint, but which is a great evil when used for lubricating purposes. A piece of plate-glass placed at an angle is made warm to 200° Fahr. A drop of oil when placed on the upper end of this glass will flow down a few inches and thus indicate its fluidity when subjected to increase of temperature. Fig. 2499 shows a ready method I have designed for testing oil in this way. It consists of a tin box in which is fixed the glass, through which can be seen a thermometer. A graduated scale at the side of the box enables the track of the oil to be measured. The box has a door at the back which enables a copper vessel full of boiling water to be introduced; the box is lined with felt to prevent rapid radiation, and when the door is closed it will be seen that several experiments may be conducted before the apparatus becomes too cool for use. I think this a cleaner way than using a lamp for the purpose. The copper may also be used by itself for indicating

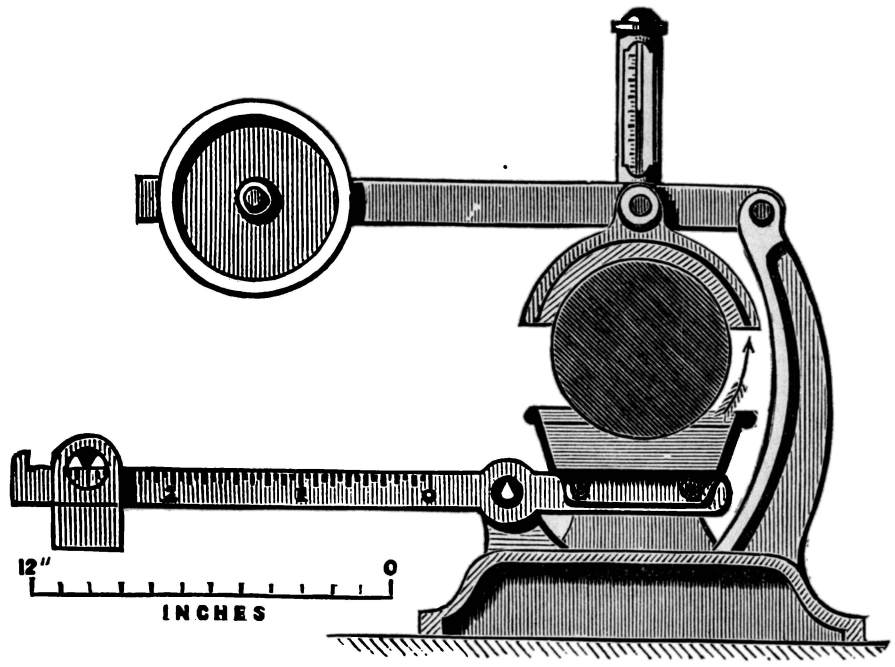

Fig. 2501.

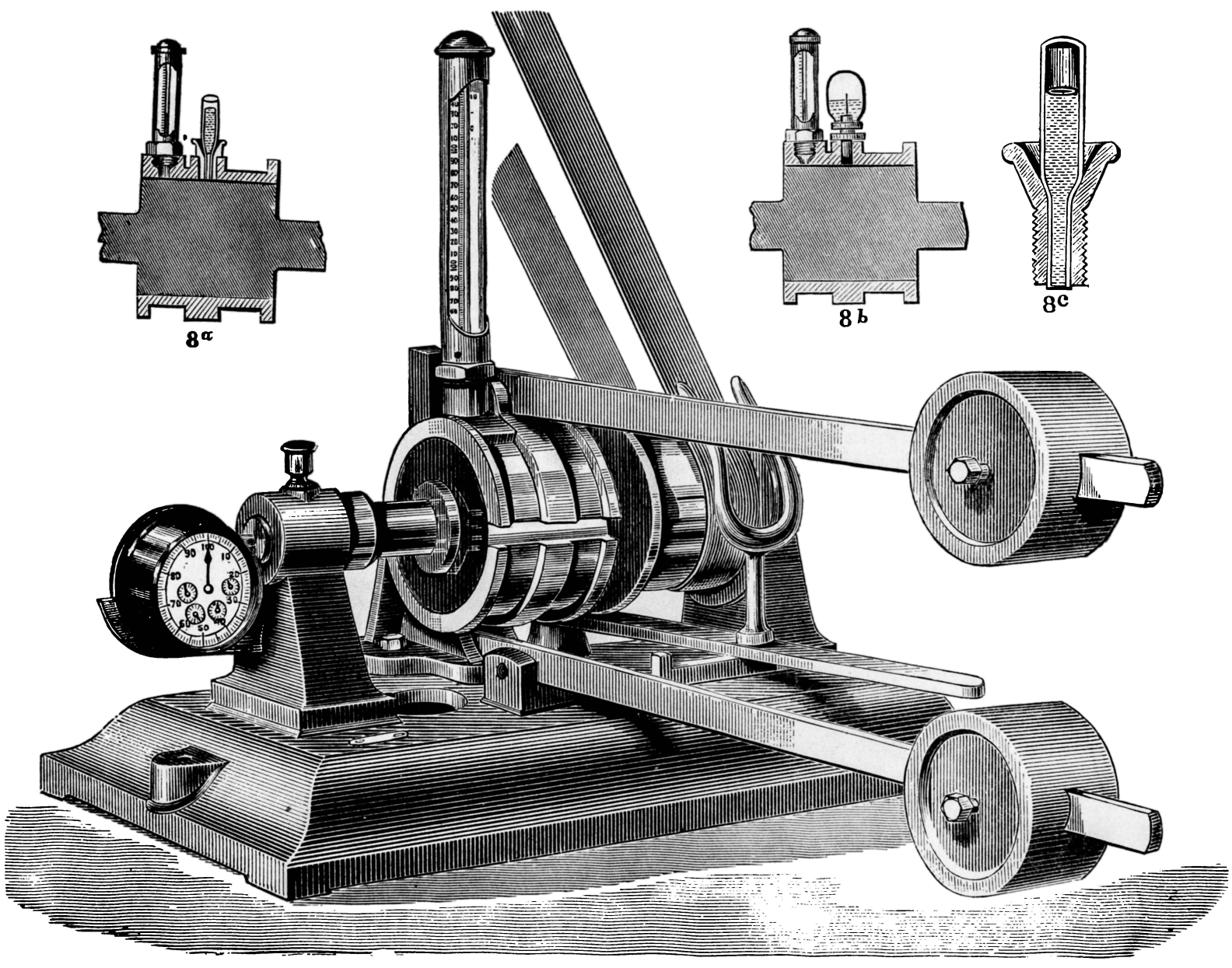

Fig. 2502.

the behavior of oil on copper when slightly warm in making it discolored or otherwise. As I have before stated, there are many oils which are good lubricants, but which become too thin when exposed to slight heat, and I do not hesitate to reiterate the statement, as I wish to have some influence on the future designs of bearing in this district. A correspondent writing to *Engineer* from Queensland says that for six months in the year oil runs off the machinery like water and seems to have no lubricating power; he says that the thermometer registers in the summer 140° in the sun, and 110° in the shade. Great difficulty seems to have been experienced by him in keeping oil on the bearings; his experiments on locomotives show that it costs for lubricating a locomotive there about a halfpenny to three farthings a mile, according to the mixture used.

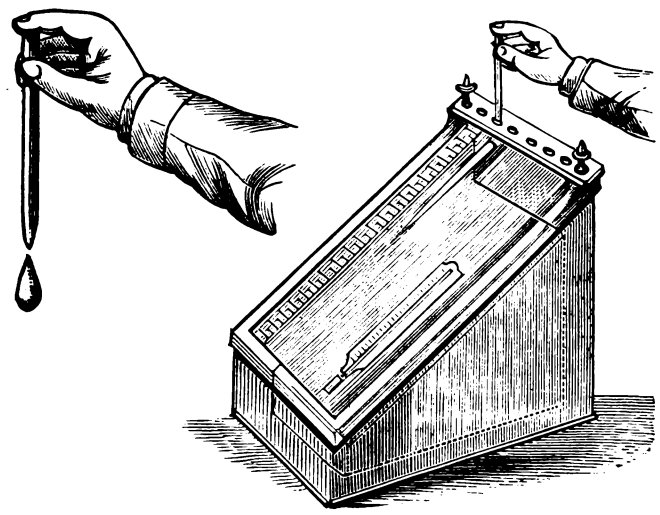

Fig. 2499.

"INFLUENCE OF THE ATMOSPHERE ON OILS.—There are some oils which are excellent lubricants for the first few hours of use, but which have a low capacity for resisting the influence of the oxygen of the atmosphere upon them. The warm glass test may be used for indicating this weakness. If after the test for fluidity the oil be permitted to remain on the glass any exhibition of a resinous or varnish quality may be observed. Another test for this resinous or gummy quality is one which has been suggested to me by Mr. F. R. Wheeldon, of Bilston. He has made many experiments. He found that by permitting oil to remain on a Stapfer friction tester after one test which had been recorded, he tested again on the following day, without adding any fresh oil. This is a severe test, as the thermometer was made to indicate 200° Fahr. each time.

"LONGEVITY OF LUBRICANTS.—Supposing an oil to possess all the qualities which we think a good lubricant should have—that it has fluidity in season, and that it does not combine with the atmosphere and become varnish, that it does not become like water in summer and like mutton suet in winter, and is in most respects satisfactory. We then want to know its powers of endurance, its capacity to resist wear and tear—in other words, its longevity. A good test for longevity or durability of oil when subject to either heavy or light frictional pressure is one suggested by Mr. W. H. Hatcher, a very careful investigator, and chief of the Laboratory of Price's Patent Candle Company, who are extensive oil manufacturers. It consists in taking away the bottom step of the Stapfer tester and placing a small dish containing oil underneath the friction roller (as in Fig. 2500). This oil is carefully weighed before and after several hours' frictional wear and tear. The drawing (Fig. 2501) shows the application of this mode, which I have designed, for testing solid lubricants, such as lard and sulphur and other railway and steamship mixtures. It will be seen that the material is kept to its duty by the weighted lever, and its progress of diminution can be tested in its place by the scale-beam arrangement. When it is used with the pressure on the top step it is advisable to drive it at about 2,000 revolutions per minute; otherwise much time will be occupied in destroying a weighable quantity of oil. The large Stapfer tester (Fig. 2502) was designed a few months ago for this purpose for the Government railways of New South Wales, and it is also used by the Manchester, Sheffield, and Lincolnshire, the Lancashire and Yorkshire, and other railways. I have not been able to get any results of these tests in time for our subject on this occasion, but hope to do so at some future time. The frictional roller is 6 inches in diameter, the pressure amounts to 1 cwt. on each step. As it takes a considerable time to wear away half a pound of solid lubricant, it may be advisable to measure by minutes instead of using the speed index. The speed should be at least 1,500 revolutions per minute. The Stapfer tester should be used in a room of equal temperature, and should not be subject to draughts of cold air, as it will be obvious these will interfere with the indications of the thermometer. A recent alteration in the Stapfer tester permits the quantity of oil used for testing to be measured with greater accuracy than before. A small oil-hole is made in the top step (see Fig. 2502 at *a* and at *c*) in which is placed a glass tube. This only holds a few drops, and can be filled by simply dropping the oil in, holding the finger at the bottom to prevent it running away, and then place it in the hole. If a small needle lubricator be weighed and then filled with oil of a definite weight, and placed in this hole (see Fig. 2502 at *b*), oil may be tested for longevity and for its anti-frictional properties for a longer period than with the small tube. If oil be placed in this at the same time that oil is placed in the lubricators in the works and the oil tester be driven from the same shafting, permitting it to stop and start when the engine stops and starts, the effect of a week's work upon the weight of the oil may be seen; notice should be taken of the difference of the temperature between the thermometer on the instrument and the temperature of the atmosphere of the workshop.

"TESTING FOR SALTS AND ACIDS, ETC.—It will be obvious that however good as a lubricant an oil is, and however valuable its properties may be when examined, if it possesses any corrosive quality which will be injurious to the metals upon which it is placed, it will soon become detrimental to the machinery, and may also cease to be valuable as a lubricant. Mr. William Thomson, analytical chemist, of Manchester, read a paper on this subject at the British Association at Glasgow, and he stated the results of elaborate experiments conducted by him to discover the influence of various oils of commerce upon bright strips of copper. He permitted the copper strips to remain entirely covered by oil. He also conducted similar tests with half of the strip below the surface of the oil, and the other half exposed to the atmosphere, in order to see what influence the oil had, when the surface line touching the metal would, of course, be acted on by the atmosphere. After noticing the effect upon the brightness or dulness of the copper, he carefully tested the oils in order to detect the quantity of metal which had been dissolved. Mr. Thomson found the following oils dissolved the largest proportions of copper, leaving the surfaces of the copper slips bright—rape, linseed, sperm, raw cod-liver, Newfoundland cod, and common seal oils; and that the following dissolved much smaller proportions of copper, also leaving the slips bright—seal, whale, cod, shark, and East Indian fish oils; and that mineral oils seem to have no dissolving power on the copper, the only effect being a slight discoloration on the copper slip of a greyish color.

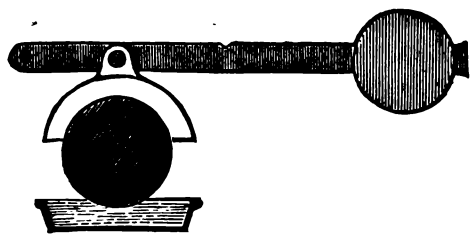

Fig. 2500.

"SWISS WATCHMAKERS' TEST FOR FLUIDITY AND CAPACITY TO RESIST COLD.—It seems, according to the *Watchmaker and Jeweller* (a monthly trade journal), that the plan I have described, and what may be called the warm glass test, seems to be looked upon with favor for testing oil in Switzerland. The degree of

heat used for testing the fluidity of oil is 200° Fahr., and if this causes the oil to become a varnish two or three days after the test the oil is considered unfit for use. Another test is one to which I have not alluded, and that is, capacity to resist low temperatures. Oils are tried for their capability to withstand low temperature in the following manner: Fifteen parts of Glauber salts are put into a small glass vessel, a small bottle of oil to be tested is immersed into this; this done, a mixture of five parts of muriatic acid and five parts of cold water is placed over the salt. By means of a thermometer the temperature is indicated, and when it shows a very low temperature, the behavior of the oil, subject to this freezing mixture, may be observed and noted. Mr. Thomson, however, considers that this mixture is not so good or so cheap as ice alone, or a mixture of ice and common salt.

"BLOTTING-PAPER TEST.—It seems it is considered that the blotting-paper test for fluidity is more reliable, according to the writer of the article, than the inclined plane experiment. In order to use this test we must saturate the strip of blotting-paper with oil, and watch whether the drops fall off in pearls or have an inclination to spread out. The latter is a certain sign, the writer says, of a viscid oil. Although this may be considered viscid oil, and may not be valuable for watches, it may, however, be a good oil for heavier machinery."

The amount of friction between a journal and its bearing varies with the kind of metal of which the journal and bearing are composed; on the area of surface in contact in proportion to the load or pressure sustained by the bearing surfaces; on the nature or degree of the lubrication afforded; on the diameter of the journal in proportion to its length; on the manner in which the journal fits or beds to its bearing, and on the kind of motion, as whether the same be continuous, intermittent, rotatory, or reciprocating.

Referring to the friction as influenced by the nature of the metals in contact: the friction varies with the hardness of the metal; thus, with hard cast iron, there will, under equal conditions, be less friction than with soft cast iron. The friction is greater when the surfaces in contact are both of the same metal than when they are of different metals. Mr. Rankine summarizes General Morin's experiments on the friction of various bodies not lubricated as follows:—

GENERAL MORIN'S EXPERIMENTS ON FRICTION.

Surfaces.	Angle of repose.	Friction in terms of the weight.
	degrees.	
Wood on wood, dry	14 to 26½	·25 to ·5
,, ,, soaped	11½ ,, 2	·2 ,, ·04
Metals on oak, dry	26½ ,, 31	·5 ,, ·6
,, ,, wet	13½ ,, 14½	·24 ,, ·26
,, ,, soapy	11½	·2
,, elm, dry	11½ ,, 14	·2 ,, ·25
Hemp on oak, dry	28	·53
,, ,, wet	18½	·33
Leather on oak	15 ,, 19½	·27 ,, ·38
,, metals, dry	29½	·56
,, ,, wet	20	·36
,, ,, greasy	13	·23
,, ,, oily	8½	·15
Metals on metals, dry	8½ ,, 11½	·15 ,, ·2
,, ,, wet	16½	·3
Smooth metal surfaces occasionally greased	4 ,, 1½	·07 ,, ·08
,, ,, ,, continuously greased	3	·05
,, ,, ,, best results	1¾ ,, 2	·03 ,, ·036
Bronze on lignum-vitæ, constantly wet	3 (?)	·05 (?)

"The 'angle of repose' given in the first column is the angle which a flat surface will make with the horizon when a weight placed upon it just ceases to move by gravity. The column of 'friction in terms of the weight' means the proportion of the weight which must be employed to draw the body by a string in order to overcome its friction, and the proportionate weight is sometimes called the *coefficient of friction*." *

In the following table are given some of the results obtained from Morin's experiments with unguents interposed.

* From Bourne's "Handbook of the Steam Engine."

Nature of surfaces in contact.	Coefficient of friction during motion.	Kind of unguent.
Brass upon brass	·058	Olive oil.
Cast iron upon brass	·078	,,
,, ,, ,, cast iron	·314	Water.
Steel upon cast iron	·079	Olive oil.
,, ,, brass	·056	Tallow or olive oil.
Wrought iron upon brass	·103	Tallow.
,, ,, ,, cast iron	·066	Olive oil.
,, ,, ,, wrought iron	·136	,,

Morin's experiments demonstrated that friction is always proportional to the pressure and independent of the area pressed in contact, providing that the pressure is not so great as to cause the surfaces to abrade in the manner or to the degree commonly known as cutting, which occurs when the area of bearing surface in proportion to the pressure is so small as to press out the lubricating material.

Now, between the degree of abrasion that is sufficient to cause a bearing to heat and the minimum, possibly lies a wide range that is very difficult of classification, and that influences the friction of the bearing and journal. Under any given dimensions of journal area and any given pressure of the same to its bearing, the abrasion, and, therefore, the friction, will be less in proportion as the fit of the journal to its bearing extends over its whole area and with an equal pressure of contact. Under these conditions, and with a bearing area ample for the given pressure, the surfaces of a journal and bearing have a smooth, glossy appearance, with a surface as glossy as plate-glass.

This degree of perfection, however, is only occasionally reached in practice, because of imperfections in the fitting and lubrication.

Now, between this condition of glossy smoothness and the degree of abrasion known to practical men as *cutting* lies, as already stated, a wide range of degrees of abrasion, and each of these has its own coefficient of friction. This may be readily proved by freely lubricating the bearings of a number of journals working under the usual conditions of practice and smearing the oil just as it passes through the bearings upon a sheet of white note paper, when it will be found to contain fine particles of metal, the number and size of particles in a given quantity of the oil decreasing as the surfaces of the bearings are glossy, and increasing as those surfaces appear dull.

The order of value to resist wear is generally considered in practice to be as follows:—

1st in value, hardened steel running on hardened steel.

2nd (and by some considered equal to the first when the pressure per square inch of area is light), cast iron either upon cast iron, hardened wrought iron, or hardened steel.

3rd, under light duty cast iron upon wrought iron or steel not hardened.

4th, wrought iron upon hard composition or brass.

5th, wrought iron upon some anti-friction metal, as Babbitt metal.

Cast iron appears to be an exception to the general rule, that the harder the metal the greater the resistance to wear, because cast iron is softer in its texture and easier to cut with steel tools than steel or wrought iron, but in some situations it is far more durable than hardened steel; thus when surrounded by steam it will wear better than will any other metal. Thus, for instance, experience has demonstrated that piston-rings of cast iron will wear smoother, better, and equally as long as those of steel, and longer than those of either wrought iron or brass, whether the cylinder in which it works be composed of brass, steel, wrought iron, or cast iron—the latter being the more noteworthy, since two surfaces of the same metal do not, as a rule, wear or work well together. So also slide-valves of brass are not found to wear so long or so smoothly as those of cast iron, let the metal of which the seating is composed be whatever it may; while, on the other hand, a cast-iron slide-valve will wear longer of itself, and cause less wear to its seat, if the latter is of cast iron, than if of steel, wrought iron, or brass. The duty in each of these cases is light; the pressure on the cast iron, in the first instance cited, probably

never exceeding a pressure of ten pounds per inch, while in the latter case two hundred pounds per square inch of area is probably the extreme limit under which slide-valves work; and what the result under much heavier pressures would be is entirely problematical.

Cast iron in bearings or boxes is found to work exceedingly smoothly and well under light duty, provided the lubrication is perfect and the surfaces can be kept practically free from grit and dust. The reason of this is that cast iron forms a hard surface skin when rubbed under a light pressure, and so long as the pressure is not sufficient to abrade this hard skin, it will wear bright and very smooth, becoming so hard that a sharp file or a scraper made as hard as fire and water will make it will scarcely cut the skin referred to. Thus in making cast-iron and wrought-iron surface plates or planometers, we may rub two such plates of cast iron together under moderate pressure for an indefinite length of time, and the tops of the scraper marks will become bright and smooth, but will not wear off; while if we rub one of cast iron and one of wrought iron, or two of wrought iron, well together, the wrought-iron surfaces will abrade so that the protruding scraper marks will entirely disappear, while the slight amount of lubrication placed between such surfaces to prevent them from cutting will become, in consequence of the presence of the wrought iron, thick and of a dark blue color, and will cling to the surfaces, so that after a time it becomes difficult to move the one surface upon the other. If, however, the surfaces are pressed together sufficiently to abrade the hard skin from the cast iron, a rapid cutting immediately takes place, which is very difficult to remove.

To obtain the best results from cast-iron bearings the bedding of the journal to the bearing must be full and perfect, and the surfaces bright and smooth, in which case it will wear better than hardened steel, unless it be very heavily loaded.

Again, a cast-iron surface will hold the lubricating oil better than either steel, wrought iron, or brass of any kind. Indeed, if a cast-iron surface be made very true and smooth so that it is polished and no marks are visible upon its surface, it will take *much patient* rubbing and cleaning with *dry clean rag* to remove the oil entirely, whereas other metals will clean comparatively easy. In testing this matter upon surface plates the author has found that the only safe method, and by far the quickest, of removing the oil from cast iron is an application of alcohol or spirits of turpentine, because the oil will enter and to some extent soak into the pores of cast iron and gradually work out again as it is continuously wiped, so that if apparently quite clean (after having been oiled and wiped) a short period of rest will cause oil to again be present to some extent upon the surface.

As a general rule motion in a continuous direction causes more wear under equal conditions than does a reciprocating one, because when a revolving surface commences to abrade, the particles of metal being cut are forced into and add themselves, in a great measure, to the particles performing the cutting, increasing its size and the strain of contact of the surfaces, causing them to cut deeper and deeper until at least an entire revolution has been made, when the severed particles of metal release themselves, and are for the most part forced into the grooves made by the cutting.

In reciprocating surfaces, when any part commences to cut, the edge of the protruding cutting part is abraded by the return stroke; which fact is clearly demonstrated in either fitting or grinding in the plugs of cocks, in which operation it is found absolutely necessary to revolve the plugs back and forth, to prevent the cutting which inevitably and invariably takes place if the plug is revolved in a continuous direction. Furthermore, when a surface revolves in a continuous direction, any grit that may lodge in a speck, hollow spot, or soft place in the metal, will cut a groove and not easily work its way out, as is demonstrated in polishing work in a lathe; for be the polishing material as fine as it may, it will not polish so smoothly unless kept in rapid motion back and forth. Grain emery used upon a side face, such as the radial face of a cylinder cover, will lodge in any small hollow spots in the metal and cut grooves, unless the polishing stick be moved rapidly back and forth between the centre and the outer diameter. If a revolving surface abrades so much as to seize and come to a standstill, it will be found very difficult to force it forward, while it will be comparatively easy to move it backward, which will not only release the particles of metal already severed from the main body, and permit them to lodge in the grooves due to the cutting, but will also dislodge the projecting particles which are performing the cutting, so that a few reciprocating movements and ample lubrication will, in most cases, stop the cutting and wash out the particles already cut from the surfaces of the metal.

In determining the metals to be used for a journal and bearing it is preferable to use the softer metal, or that which will wear the most, in the position in which it can be the most easily and cheaply replaced, which is usually in the bearing rather than in the journal; and since two metals of a different kind run better together than two of the same kind, the bearing is usually of a different kind of metal from that composing the journal. It may be stated, however, that under *light duty* cast iron will wear upon cast iron better than wrought iron or brass upon cast iron (for reasons which have already been stated), especially if the bearing area be broad and the lubrication ample and perfect.

To facilitate the removal of the bearings, brasses or boxes are provided, but in the case of small journals, as, say, of about 3 inches and less in diameter, the duty being light, the lubrication ample and equally distributed, and the journals an easy working fit when new, it is found that solid cast-iron boxes will last for a great length of time without sensible wear.

In some cases cast-iron boxes are cast with a receptacle for some soft metal, such as the various compound metals known under the general name of Babbitt metal.

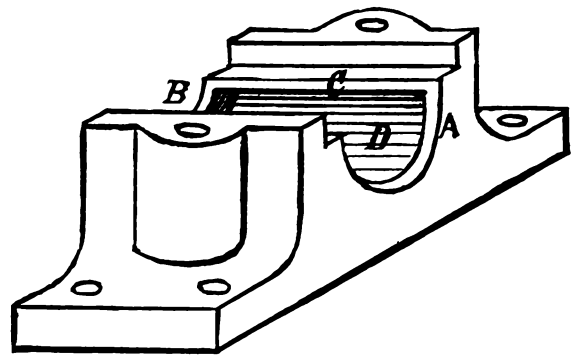

Fig. 2503.

Babbitt metal is composed of tin, antimony, and copper, mixed in varying proportions. A good mixture for general use where the duty is light is composed of 50 parts tin, 5 parts antimony, and 1 part copper. A harder composition, sometimes termed white metal, is composed of tin 96 parts, copper 4 parts, and antimony 8 parts. This mixture is especially suitable for journal boxes or bearings. It is mixed as follows: Twelve parts of copper are first melted, and then 36 parts of tin are added; 24 parts of antimony are put in, and then 36 parts of tin, the temperature being lowered as soon as the copper is melted in order not to oxidize the tin and antimony; the surface of the bath being protected from contact with the air. The alloy thus made is subsequently remelted in the proportion of 50 parts of alloy to 100 tin.

For brass bearings or boxes a mixture of 64 parts copper, 8 parts tin, and 1 part zinc is found to answer well; but for bearings not requiring so hard a metal, the quantity of zinc is increased, and that of the tin diminished.

Bearings or boxes that are to be babbitted are usually cast as in Fig. 2503, there being a rib at A, B, and C, forming a cavity at D, into which the melted metal is poured. The ribs (in new boxes) are sometimes bored out, or for rougher work may be chipped and filed out to fit the shaft, and hold it in line; and to prevent the ribs A, B, &c., from bearing and cutting the shaft, a piece of pasteboard is laid on ribs A and B, thus confining the journal bearing to the babbitt. The best method is to pour the bearing and then rive the babbitt well into the cavity D, which is made wider at the bottom, to prevent the babbitt from coming loose, and then bore out the bearing in the usual manner.

The principal advantage of a babbitted bearing is the ease with which it can be renewed, and the fact that the metal will soon bed itself to the journal. This is of great advantage in the case of solid bearings in the framing of fast-running machines, and in situations where it would be awkward or difficult to take brasses or bushes out to fit them, or align them to the shaft, which in many cases would also require to be taken out to remove the brasses. On the other hand, any particles of grit that may find ingress to babbitted boxes are apt to become bedded into the babbitt metal and cut or grind away the journal.

Since the babbitt metal in a bearing is apt to close across the bore when cooling after being poured, a mandrel of slightly larger diameter than the diameter of the journal should be used in place of the working journal to run the bearing on. Some effect the same purpose by wrapping writing paper around the journal; but it is wrong to use the journal, for the following reasons: To get a good, sound, well-fitting babbitt metal box, the metal should be poured as cool as possible, for if made red hot it contracts so much in cooling that it does not fit well in the box or frame of the machine. On the other hand unless the metal be well hot it is apt to cool and set too soon and be unsound. To remedy this the journal, or whatever represents it, must be heated. The heating is very apt to bend it. It is obvious then that instead of the journal a temporary bar of iron of slightly larger diameter than the working journal should be used, heating it to a good black hot heat, so that the babbitt metal may be poured less hot than would otherwise be permissible, and the contraction of the babbitt in the box reduced to a minimum. A little powdered resin sprinkled in the box will help the babbitt to flow easily and make a sound casting.

The temporary spindle, or journal, should also be oiled, and as soon as the metal has well set, the temporary journal should be revolved to free it. Babbitt bearings cast in two halves should be fitted to the journal as already described for brasses, which will well repay the cost and trouble.

To prevent the metal from running out of the bearing, its ends are closed by means of either clay or putty closely packed against the bearing ends and the shaft, and in pouring in the melted metal it is best to pour it on the top of the shaft, and let it run down its sides into the cavity of the bearing. This heats the shaft equally, and prevents it bending from unequal expansion, as it would do if it met the heated metal on its lower half only, it being obvious that if the shaft bends the bore of the bearing will not be cast in line; hence, the shaft will bear at the end only, and will require to wear the babbitt down to a bearing.

Babbitting is sometimes employed to refit parts that have worn loose, or to bush the bores of work. Suppose, for example, that in a case of emergency a pulley of a certain diameter is required, and that the only one at hand has too large a bore, then we may take a mandrel or arbor of the diameter of the shaft the pulley is required for, and drive on it two thin washers and turn them to fit the bore of the pulley, and cut a recess in each to enable the metal to be poured through. We may then put the arbor and washers in the pulley (the washers serving to hold the arbor true), and fill in the bore with babbitt metal, leaving the pulley set-screw in place and set to just touch the arbor, so as to cast the thread in the babbitt bushing, and thus save drilling and tapping.

PROPORTIONS OF JOURNALS.—It follows from what has been already said that under a given amount of duty the friction will be less and the durability greater in proportion as the bearing area of a journal is increased. But it is an important consideration whether such area shall be obtained in the diameter or in the length of the journal, or, in other words, what shall be the proportions between the diameter and length of a journal. It is found in practice that a journal wears better in proportion as its length exceeds its diameter, providing that the stress is not sufficient to cause sensible flexure, because in that case the pressure is reduced at that part of the journal where the most flexure occurs, and increased where the journal is most rigid. As a result, the abrasion increasing with the pressure becomes locally excessive, the glossy smoothness is lost and increased friction ensues.

If, however, the length of a journal is limited by the exigencies of its location or the design of the machine, the diameter of journal must be increased if necessary in order to obtain sufficient bearing area to withstand the stress without causing undue abrasion.

Referring to the bearing area in proportion to the load, Prof. R. H. Thurston writes, in an article in the *Railroad Gazette* of January 18th, 1878, as follows:—

"A pressure of 800 pounds to the square inch can rarely be attained on wrought iron at even low speeds, while 1,200 pounds is not infrequently adopted on the steel crank-pins of steamboat engines. I have known of several thousand pounds pressure per inch being reached on the slow-working and rarely moved pivots of swing-bridges. In my own practice, I never, if I can avoid it, use higher pressures than 600 and 1,000 on iron and on steel, and, for general practice, make the pressure less as the speed is greater."

W. Sellers and Co. state that under a pressure of 50 lbs. per square inch and with oil well distributed over the surface of the box, the metal of the journal will not touch that of the bearing box bore.

In practice bearings are made with a length varying from that equal to the diameter of the journal to about four times that diameter, and but few cases occur in which these limits are exceeded in either direction. It is to be observed, however, that diminishing the length is apt to increase the abrasion unless the duty is very light indeed, while increasing it increases the durability while not affecting the friction, unless the shaft bends.

There are special cases in which within certain limits the proportions of journals are nearly uniform in practice; thus the length of engine crank-pin bearings rarely exceeds once and a half times the diameter, while the main shaft bearings are often similarly limited in width from the exigencies of designing the engine so that the eccentric shall come in line with the slide-valve spindle. In the case of crank-pins the pin cannot be held sufficiently rigidly to prevent spring or flexure; hence it is desirable to limit its length so that its pressure shall be as short a leverage as possible to the crank. The solid bearings in the framing of machines usually admit of room enough to make their lengths three or four times the diameter. Again, in the case of line shafting, boxes having a length equal to three or four times the diameter may be employed, providing that the alignment be made correct, or that the boxes are self-adjusting. But in all cases the longer the bearings the greater the necessity for correct alignment, so that the axis of the bearing bore may be in line with the axis of the shaft, the error manifestly increasing with the length of the bearing.

PLACING TWO CRANKS ON A SHAFT SO THAT THEIR CENTRE LINES SHALL STAND AT A RIGHT ANGLE.—It is obvious that the keyways in both the crank and the shaft must be cut accurately in their proper positions, because it is a tedious operation to file out the sides of the keyways when the cranks are placed upon the shaft. To mark the keyways, in the absence of any tools or appliances specially designed for the purpose, we proceed as follows: Placing the shaft upon a marking-off table, we plug up the centres upon which the shaft has been turned by driving a piece of lead in them, leaving the surface level with those of the shaft; and then from the perimeter of the shaft we carefully mark, upon the lead plugs, the centres of the shaft. From this centre we describe a circle whose diameter will be equal to the required widths of the keyway, and then taking a square we place its stock upon the face of the marking-table, and bringing the edge of the blade even with the edge of the circle, we mark a perpendicular line upwards from the circle to the perimeter of the shaft, and then draw a similar line on the other side of the circle, as shown in Fig. 2504, in which A represents the shaft and B the circle, C the perpendicular line struck on one side of the circle, and D the square placed upon the marking-table E, in position to mark the line on the other side of the circle, F and G being wedges to keep the shaft A from moving its position upon the table. We next mark with a scribing-block or surface gauge the depth of the keyway as denoted by the line H, and the marking at that end of the shaft is completed. Passing to the other end of the shaft we find the centre of the shaft, and describe around it a circle equal in diameter to the required width

of keyway, and from the edges of the circle to the perimeter of the shaft draw two lines with a scribing-block, as shown in Fig. 2505, A representing the shaft, B the circle, C D the breadth of the keyway, E the marking-off table, F and G the wedges, and H the depth of the keyway, which must, in this case, be marked with a square resting on the table.

If, however, the shaft is too heavy or large to be placed on a marking-off table, we may proceed as follows: Strike as before the circle B, Fig. 2504, equal in diameter to the required width of keyway, and adjust a straight-edge held firmly against the end face of the shaft, so that its upper edge is coincident with the perimeter of this circle, while the straight is horizontally level-tested by a spirit-level. Draw a line along the shaft face, using the straight-edge as a guide. This will give us the line C in Fig. 2505. By a similar process the line D, Fig. 2505, may be drawn.

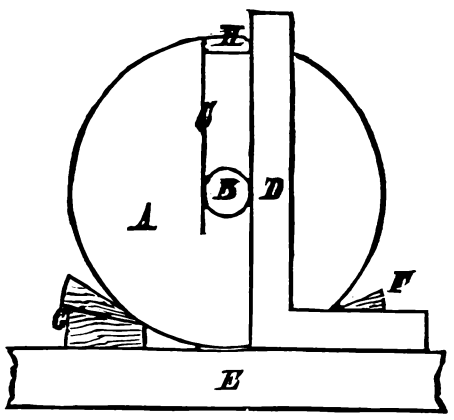

Fig. 2504.

At the other end of the shaft similar lines, but standing vertical, may be marked, which will give the positions of the keyways.

We have now marked off on the end faces of the shaft a keyway at each end, one standing at a right angle to the other; but it must be borne in mind that we have paid no attention as to which crank shall lead; that is to say, suppose in Fig. 2506 A and B represent cranks placed upon the shaft C, and running in the direction indicated by arrow D, it is evident that the crank B leads in the direction in which the engine is to run, and hence the keyway E stands in advance of the keyway F; and therefore, as shown in the figure, the right-hand crank leads. To

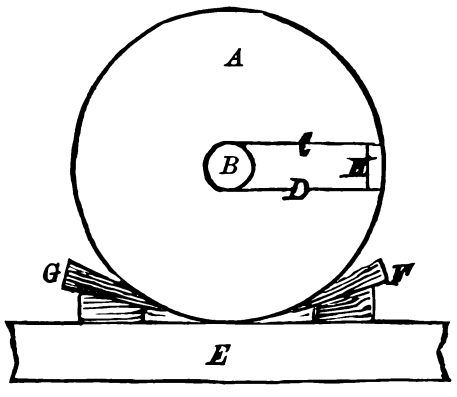

Fig. 2505.

have made the left-hand crank lead, when the engine runs in the direction of the arrow D, we should, supposing the keyway F to be already cut, have to cut the keyway E on the directly opposite side of the shaft; or, what is the same thing, supposing the keyway E to be already cut, the keyway F would require to be cut on the diametrally opposite side of the shaft. It is obvious that if the engine ran in the direction of the arrow G, the left-hand crank would lead, supposing in each case the cylinders to stand at H. Here it may be necessary to explain the manner of determining which is the right-hand and which the left-hand crank. Suppose then that the figure represents a locomotive crank, the cylinders being at H, then as the engineer stands in the cab, facing his engine, A will be the left-hand and B the right-hand crank. It is usual in locomotives to make the left-hand crank lead when the engine is running forward, the practical difference being, that if the workman were by mistake to make the right-hand crank lead, the engine would run forward when the reversing lever was placed to run backward, and *vice versâ*. It makes no difference whether the shaft can be turned end for end or not: if the right or left crank is required to lead when the crank is required to revolve in a given direction the keyways in the shaft must be marked off in the relative positions on the shaft necessary to obtain that result.

The keyways may be carried along the circumference of the

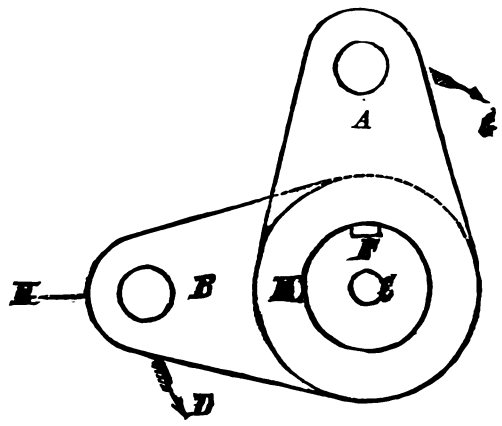

Fig. 2506.

shaft by a square applied to its end face, or if that face is not flat by the ordinary keyway marking tool.

To mark off the keyways in the cranks, we place a centre-piece in the bore of the crank, as shown in Fig. 2507, in which A represents a crank having a centre-piece of sheet iron B placed in the bore. On the face of this centre-piece we mark the centre of the hole into which it fits, and from that centre we describe the circle C, which must be of exactly same diameter as the crank-pin if it is in its place, or otherwise of the crank-pin hole. We then draw the lines D and E, using as a guide a straight-edge placed one end upon the crank-pin journal, or even with the edge of the crank-pin hole, as the case may be, and the other end (of the same edge of the straight-edge) exactly even with the circumference of the circle C. From D and E we find the centre of the circle F, which must be central between D and E, and whose diameter must be exactly equal to the required width of keyway; and we then mark the circle G, describing it from the centre of the hole, and therefore of the circle C. By drawing the lines H and I, which must be even with the circumference of the circles F and G, using a straight-edge as a guide, we shall obtain the correct position for the keyway K, and the whole of the keyways may be cut, care being taken to cut them quite true with the lines, and of an exact equal width.

To put the cranks on the shaft, first provide a temporary key, a

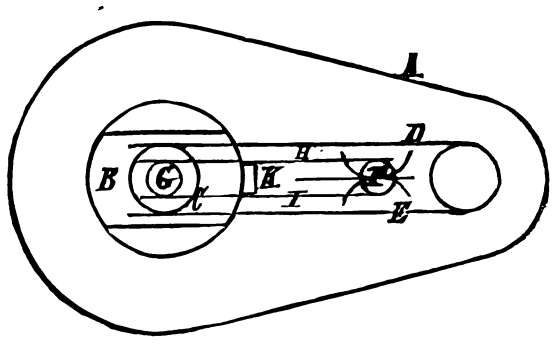

Fig. 2507.

close fit on the sides, but clear top and bottom, so that it will bind just easily on the sides of the keyways in both the shaft and the crank. The shaft must be placed and wedged with its keyway downwards, so that in putting the crank on, the pin end may hang downwards, which will render it more easy both to put on, handle, and adjust. As soon as the shaft has entered the crank, say a quarter of an inch, we must insert the temporary key (which may have its end edges well tapered off to assist the operation of entering it) sufficiently far into the keyway of the shaft that it will

not fall out, and we may then proceed to put the crank on the shaft to the necessary distance, keeping the temporary key sufficiently far in the keyway to enable it to act as a guide—that is to say, up to at least half the length of the keyway.

To put on the second crank, we first place the shaft so that the crank already on stands exactly horizontal, setting it by placing a spirit-level, as shown in Fig. 2508, in which A represents either the crank-pin journal or the crank-pin hole in the crank, and B a circle struck on the end face of the shaft and from its centre, the diameter of the circle B being exactly the same as that of A. If then we so adjust the position of the crank that a spirit-level applied to the exact circumferences of the circles A and B stands level, the crank will stand level, and we have only to put the second crank on with its centre-line standing perpendicular, and

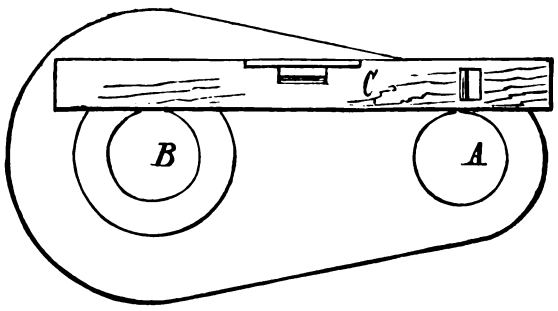

Fig. 2508.

the two cranks will be at a right angle one to the other. We now proceed to put on the second crank, pursuing the same method employed in putting on the first one, save that the temporary key need not be inserted so far into the keyway, because, if the keyways have been cut the least out of true, it will make a great difference at the crank-pin, because of the increased distance of the latter from the centre of the crank-shaft. As soon as the second crank is placed to its position on the shaft we must ascertain if it stands vertical, which we may do by applying the spirit-level as shown in Fig. 2509, bringing its edges exactly fair with the edges of the circles A and B, and moving the crank until the bubble of the level stands true, and taking out the temporary key if it is necessary to adjust the crank at all.

If, however, the crank is to be forced on by hydraulic pressure,

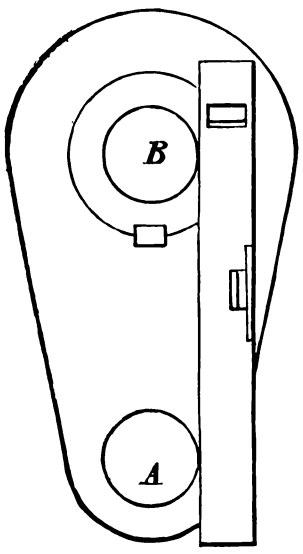

Fig. 2509.

this latter adjustment should be made when the crank is just sufficiently far on the crank shaft to enable it to bind enough to well support its own weight, to facilitate which the end of the shaft is sometimes slightly tapered for a very short distance—a practice which is sometimes rendered unnecessary by reason of there being attachments fitted to the hydraulic presses which of themselves adjust the position of the cranks, and insure their being at a right angle one to the other.

After the cranks are on their places the keys may be fitted, care being taken that, if the crank last put on had to be moved to adjust it, the sides of the keyways be filed even, otherwise driving the key will tend to move the crank.

FITTING ENGINE CYLINDERS.*—When engine cylinders are made in quantities, as in locomotive building shops, a great deal of the fitting work is saved by the machine work; but when a single cylinder or a pair of cylinders only are to be fitted up it will not pay to make jigs and appliances; hence, they are usually fitted up entirely by hand. The first thing to do is to mark off all the holes requiring to be drilled, and have the drilling done.

In marking the holes in the cylinder covers it is to be noted whether that part of the cylinder cover which fits into the cylinder has a portion cut away to give room for the steam to enter (as is usually the case), and if so, first mark a line across the inside flange of the cover, parallel to the part cut away, and then scribe each end of the line across the edge of the flange. Then mark a similar line across the cylinder end, parallel to the steam port where it enters the cylinder, and scribe each end of this line across the cylinder flange, so that, when the cylinder cover is placed into the cylinder and the lines on the flanges of the cylinder and the cover are placed parallel to each other, the piece cut away on the cover will stand exactly opposite to the steam port, as it is intended to do. The cover may then be clamped to the cylinder, and holes of the requisite size for the tap (the tapping holes, as they are commonly called) may be drilled through the cover and the requisite depth into the cylinder at the same time.

The cylinder covers must, after being drilled, as above, be taken from the cylinder, and the clearing drill put through the holes already drilled so that they will admit the bolts or studs, the clearing holes being made $\frac{1}{16}$ inch larger than the diameter of the bolts or studs. The steam chest may be either clamped to the

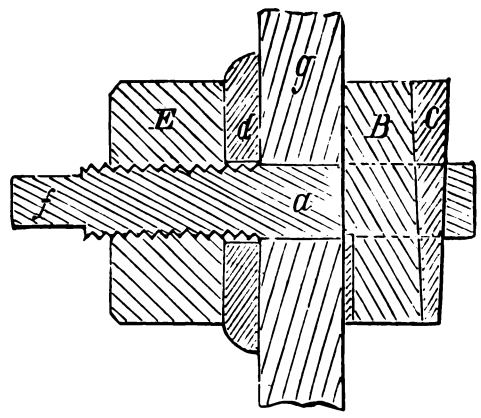

Fig. 2510.

cylinder, and tapping holes drilled through it and the cylinder (the same as done in the case of the covers), or it may have its clearing holes drilled in it while so clamped, care being taken to let the point of the drill enter deep enough to pass completely through the steam chest, and into the cylinder deep enough to cut or drill a countersink nearly or quite equal to the diameter of the drill. If, however, the steam chest is already drilled, it may be set upon the cylinder, and the holes marked on the cylinder face by a scriber or by the end of a piece of wood or of a bolt, which end may be made either conical or flat for the purpose, marking being placed upon it; so that, by putting it through the hole of the chest, permitting it to rest upon the cylinder face (which may be chalked so as to show the marks plainly), and then revolving it with the hand, it will mark the cylinder face. This plan is generally resorted to when the holes in the chest are too deep to permit of being scribed. To true the back face, round a hole against which face the bolt head or the face of the nut may bed, in cases where such facing cannot be done by a pin countersink or a cutter used in a machine, the tool shown in Fig. 2510 may be employed, *a* being a pin provided with a slot at one end to admit the cutter B, which is held fast by the key C, and is also provided with a square end *f*, by which it may be turned or revolved by means of a wrench, and with a thread to receive the nut E, *d* being a washer; so that, by screwing up the nut E, the cutting-edges of the cutter are forced against the cylinder *g*, and will, when revolved, cut the face, against which they are forced, true with the hole in the cylinder through which the pin *a* is passed.

After the drilling the cylinder should be placed on end and all

* From the "Complete Practical Machinist."

the holes that can be got at should be tapped. Then the cover joint, supposing it to be a ground joint, should be made according to the directions given for making ground joints, when the cylinder may be turned upside down and the other cover fitted. Then the holes for the cylinder cocks and for the steam and exhaust pipe

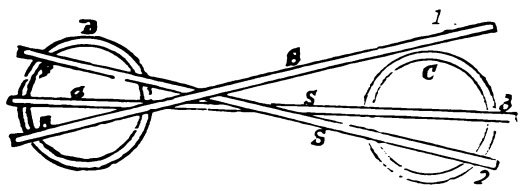

Fig. 2511.

should be tapped, and the faces for these pipe joints fitted as required.

The steam-chest holes should then be tapped and the ports marked out and chipped and filed to the lines, such lines being marked as described in the remarks on lining out work.

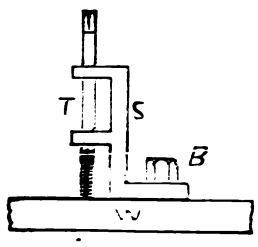

Fig. 2512.

The face for the steam-chest seat and the steam-chest cover may then be prepared by filing, scraping, or grinding, as may be required, and simultaneously the valve seat and valve face may be fitted. If the cylinders are to be bolted together as in a locomotive, the holes for holding them together should be drilled about $\frac{1}{64}$ inch smaller than the bolts, so that they may be reamed out together after the cylinder bores are aligned.

One cylinder face should be marked and drilled first, and the two cylinder bores being set to align true the other cylinder should be marked from the other, or if there is a saddle between the two cylinders both cylinders may be marked and drilled, and also the holes on one side of the saddle. Temporary bolts may then be put through the holes that are drilled in the cylinder and saddle and clamps used to hold the undrilled cylinder to the saddle, when the cylinder bores may be set true one to the other, and the holes on the remaining side of the saddle marked through those already drilled in the cylinder. These latter holes being drilled, temporary bolts of smaller diameter than the holes (so as to give room to move the cylinders to align their bores) may be used to bolt the cylinders together while their bores are accurately aligned, which alignment may be effected as follows:—

The bores should be set as near true as possible, tested by a spirit-level rested on the bore and placed as near true as can be judged with the length of the bore, and a plumb rule may be applied to the end faces where the cover joint comes. Then a straight-edge should be applied, as in Fig. 2511, in which S is the straight-edge, and C and D the two cylinder ends.

The method of testing is shown in Fig 2511, where the straight-edge S is shown in three positions, marked respectively 1, 2, and 3 at one end, and F, G, and H at the other.

The first test should be made by simply placing the straight-edge across the two cylinder faces, as at G 3; and when the cylinders are set apparently true and the spirit-level applied to the respective bores shows them true, greater accuracy may be secured by placing the straight-edge in position 1 H, being pressed firmly to its cylinder face with end 1 above the other cylinder face. Then, while end H is held firmly to its cylinder, let end 1 lower until it passes entirely over the face of cylinder C, whose face it should just touch; if on meeting C the straight-edge strikes it or does not meet it, further adjustment of the cylinder positions is necessary. Next place the straight-edge in position 2, pressing end F firmly against cylinder D, and passing the other end entirely over the end of cylinder C, which it should just touch, and no more. It will then be necessary to repeat this process, pressing the straight-edge against cylinder C and testing the other end with cylinder D, and the cylinders thus set will be (if the end faces are true, as they should be, and usually are) more truly aligned than is possible by the use of the spirit-level. This method also brings the end faces of the cylinders in the same plane, so that each piston head will travel central in the length of the cylinder bore, approaching the cylinder covers equally, and therefore keeps the clearance equal. Incidentally, also, this secures accuracy in the cross-head traverse on the guide bars (supposing these bars to be bolted to

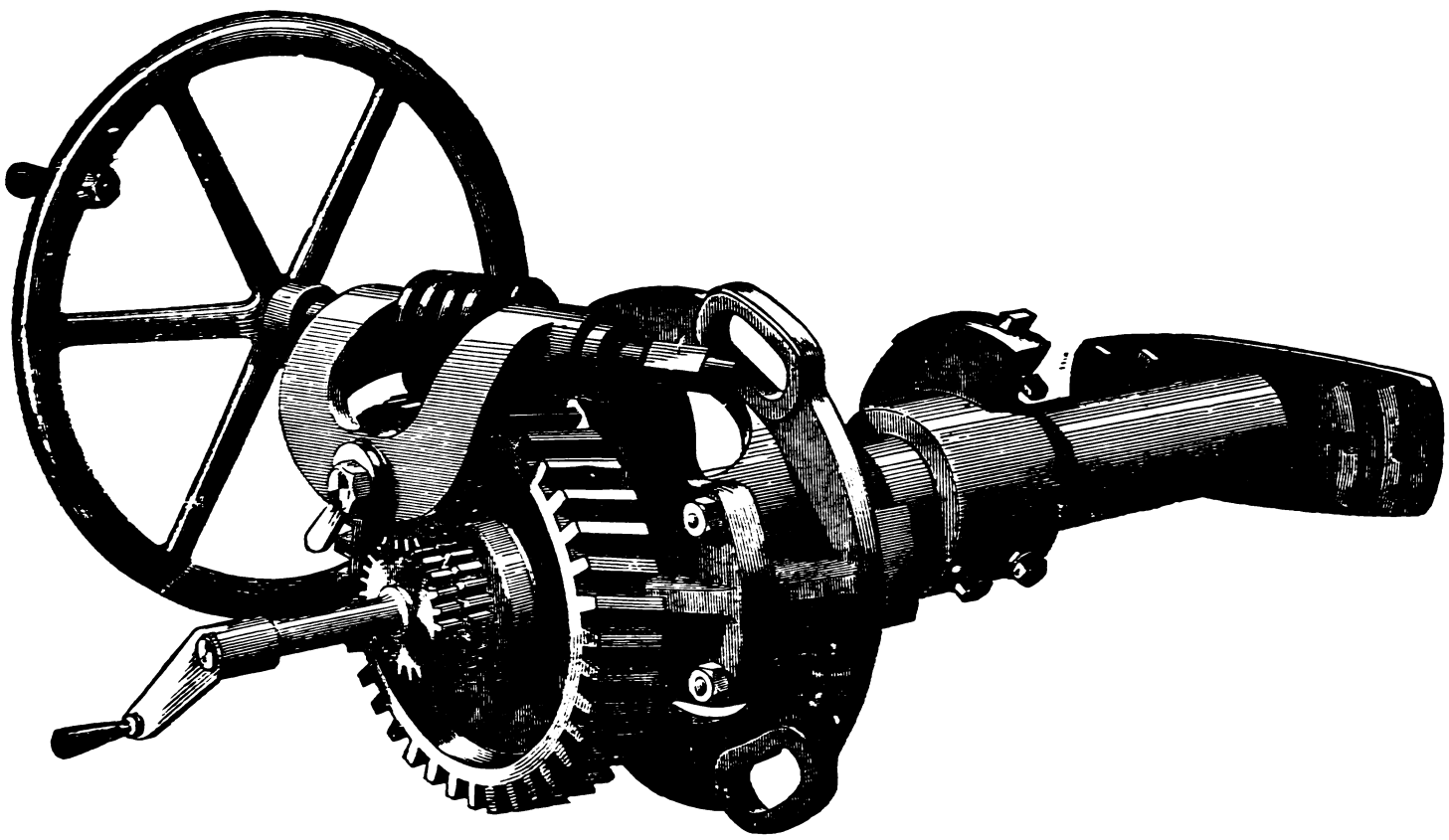

Fig. 2513.

the cylinder cover). The holes for bolting the cylinders together may then be reamed and the bolts driven in and screwed up.

To guide the tap when tapping the cylinder cover and steam-chest holes the guide stand S, shown in Fig. 2512, should be employed. It is bolted to the cylinder face by the bolt B, which passes through a slot in the stand.

The tap T is inserted through the two arms of the stand and its end inserted in the hole to be tapped when bolt B is tightened up.

The stem of the tap should be of slightly larger diameter than the tap thread, so as to fit in the holes of the guide or stand.

When, however, one end of the guide bars is carried on the cylinder cover, it is necessary when setting that cover to be marked

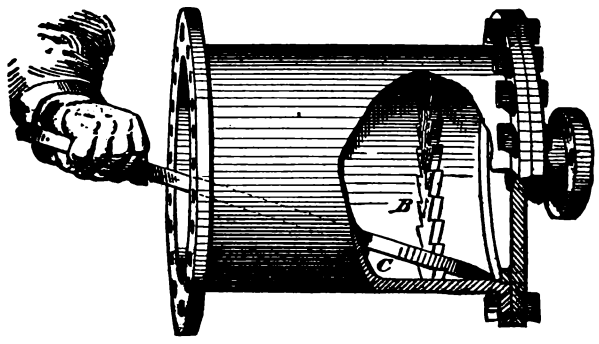

Fig. 2514.

for the drilling, to so set it that the seats for the guide bar ends shall be horizontally level when the cylinder is on the engine; and when setting the bores of the cylinder in line to mark the holes for bolting the cylinders together or to the saddle, this point should also be looked to, as if these seats are not in line the faces of the guide bars will not be in line, and will not, therefore, bed fair to the cross-head guide unless the error is in some way corrected.

It is desirable that these seatings be quite true and in line one with the other on both cylinders, so that if liners require to be made, or if the ends of the bars require to be filed to let the bars together at any time, the surfaces may be filed true to the face of the bar, and thus be set true and to fit the cross-head guides without requiring to put the bars on and off to fit them true by trial.

Reboring Cylinders in their Places on the Engine.—When a cylinder bore becomes so worn out of cylindrical truth, or becomes grooved or cut, as it is termed, as to require to be rebored, it may be done with the class of boring bar shown in Fig. 2513.

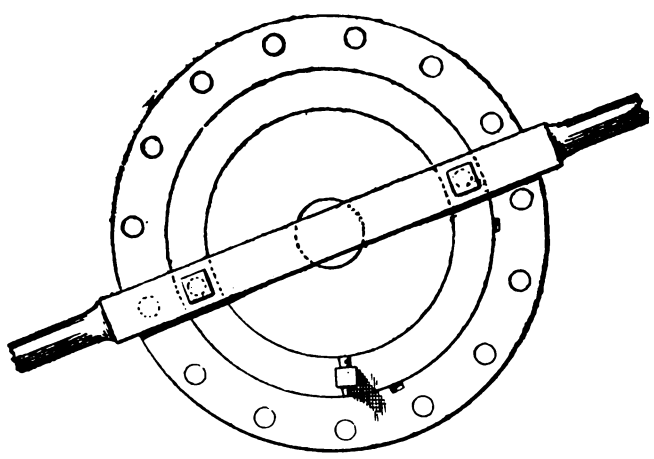

Fig. 2515.

It consists of a bar having journal bearing in castings which bolt on to the two ends of the cylinder in place of the cylinder covers. On the bar is fitted a sliding head carrying the cutting tool and fed by a screw passing within the bar. To operate the bar and simultaneously the feed screw, the hand-wheel and worm-wheel is employed, giving rotary motion to the worm-wheel which is fast upon the bar. Fast also upon the bar is the inside one of the two small gears shown, which operates the inner of the two small gears shown above it. The outer of the upper gears engages with the outer of the lower ones, the latter being fast upon the feed screw. In the inner pair the lower is of largest diameter, but in the outer pair the upper is the largest, and as a result the outer of the lower rotates the fastest, and hence rotates the feed screw, causing the tool to feed to its cut.

The proportions of these wheels are, first or inside pair, lower wheel 36, upper 37; outside pair, upper 37, lower 36, so that the feed per bar rotation is in amount that produced by moving the outer lower gear a part of a rotation equal to twice the pitch of the teeth, the cutting tool motion depending upon the pitch of the feed screw.

To enable the rapid traverse of the head from end to end of the bar, the upper pair of gears are mounted on an eccentric stud, so that by operating the small handle shown they may be disengaged from the lower feed gears and the feed screw operated direct by means of the handle shown.

In setting such a bar to a cylinder bore it is to be remembered that two methods may be employed. First, the bar may be set to accommodate the cylinder bore, truing it out with as light a cut as

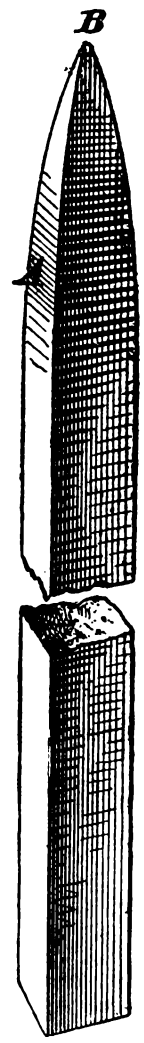

Fig. 2516.

Fig. 2517.

possible. In this case the bore of the cylinder may be made out of line with the guide bars and with the centre of the length of the crank-pin journal.

In the second the bar may be set with a view to bore it out in line with the guide bars and crank pin, and then taking as much cut as will be necessary to true the bore.

The latter plan is the preferable of the two, unless the repairs are so extensive as to require the guide bars to be redressed and the main bearing renewed, in which case those parts requiring to be re-aligned, the cylinder may be rebored with a view to take out as little metal as possible, and the other parts set to suit the new bore.

To set the bar true to the guide bars and crank pin, and thus retain the axis of the new bore true with that of the original bore, the bar should be set true with the recessed counterbore at each end of the cylinder, which being unworn remains true.

If, however, only one cylinder cover can be conveniently taken off, the piece of wood will require to fit in the counterbore at the open end, and in the cylinder bore at the closed end of the cylinder; hence we make it large enough for the counterbore, and after having removed the ridge at that end we cut the length of the wood down to fit the cylinder bore, whereas if we made our rest to fit the bore at first we should require to use wedges to make

it fit the counterbore. In some cases holes might be bored near the ends of the rest or fulcrum to serve the same purpose as the notches.

The method of using the scraper, Fig. 2516, is shown in Fig. 2514, which latter represents an engine cylinder. At B is shown the wooden rest or fulcrum; and at C the lever scraper operating on the ridge at the closed end of the cylinder. The lever C is worked on the pulling stroke only, and is so held that the edge presents a keen scraping tool which will cut very freely. The fulcrum B should be adjusted as closely as convenient to the work, so as to obtain good leverage for the scraper. It should be moved in its position, so that during the roughing out only the lower notches in the fulcrum are used.

A plan was lately resorted to on the White Star Line of steamships for re-boring a cylinder. The cylinder heads and piston follower were taken off; a groove was cut from the outer end of the cylinder along the bore as far and as deep as the counterboring was required to be done. The counterboring was then accomplished in the manner shown in Fig. 2515. The junk ring was provided with a small tool holder, such as is used upon boring bars. The tool was fastened in the holder while its cutting edge was in the groove referred to, cut as deep and as far up the cylinder as the counterboring was to be. To the junk ring was fastened, by two long bolts, a wooden lever extending above and across the cylinder. Two men walked around pushing the lever, and when the tool at each revolution arrived at the groove, a fresh cut was taken by moving the engine so as to raise the piston the necessary amount. It is obvious that the piston head may be steadied and held true in the bore of the cylinder by means of a few wooden wedges. Thus we see that in this operation the junk ring was made to serve as a boring bar head, the men furnishing the necessary rotative motion, the feed motion to the tool being obtained by advancing the piston toward the end of the cylinder where the work was being done.

The ridges which in time form at the two ends of a cylinder bore are usually removed by the hand-boring bar shown in Fig. 2513, but they may, in cylinders of from 12 to 24 or 30 inches in diameter, be readily cut out by hand as follows:—

Take a bar of steel $\frac{9}{16}$ inch square and 3 feet 6 inches long; forge it at one end to the shape shown in Fig. 2516, in which from A to B is the forged end. This end must then be heated along its entire length to a cherry red, and dipped vertically into cold water to harden it; after which it must be ground from A to B on all four faces square across, and as nearly of an even curve as can be ascertained by the eye. Next take a piece of hard wood—oak, for instance—about an inch thick and 3 inches wide; cut it to such a length that when placed upright its ends will wedge tightly into the counterbore of the cylinder. Into the edges of this piece of wood saw out a series of notches, making its finished appearance to be such as shown in Fig. 2517. The object of fitting its length tightly into the counterbore of the cylinder is as follows: If both cylinder covers are off or can be conveniently taken off, the ridge can be operated upon at each end of the cylinder; hence our piece of wood, which is merely an improvised rest to act as a fulcrum for the bar scraper shown at the top of the figure, would require to fit into the counterbore.

Chapter XXIX.—ERECTING ENGINES AND MACHINERY.

IN engines having suspended guide bars, it is not uncommon to set those bars by the working parts of the engine, instead of by lines. This is an advantage when the parts of the engines are not taken down, and, if care is taken, will make a true and smooth working job; but otherwise, it is likely to introduce errors in the lining of the engine, which throw it out of proper line, and cause a great deal of friction.

The proper method of setting the bars depends upon the condition of the engine as to wear. Suppose, for example, that a new piston head has been put in, then, if the gland is new also, or is a good fit to both the piston rod and the bar of the stuffing box, the bars may be set as follows:—

Place the piston at the back end of the cylinder, and put the cross head and guide blocks in proper place on the rod. Put up the bottom guide bars so that they just touch the cross-head guides. Now, in adjusting these bottom bars there are two essential points: first, that the plane of their upper surfaces shall stand parallel with the axial line of the main shaft, and secondly, to place the upper surface parallel with the axial line of the cylinder (it being of course assumed that the cylinder and crank shaft are in proper line). The first of these essential points will be attained when a spirit-level, placed truly along the bore of the

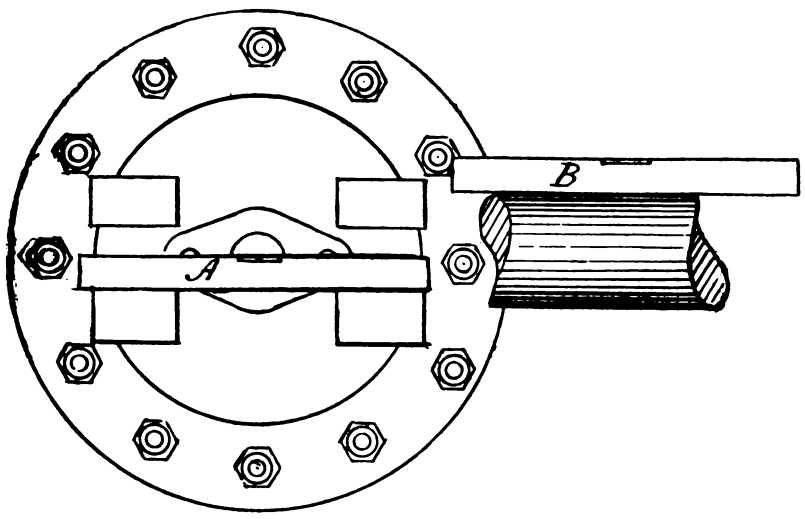

Fig. 2518.

cylinder, shows the bubble to stand in the same position in the tube, as it does when placed upon and along the bar. The second will be attained when a spirit-level, placed across the bars, as in Fig. 2518, at A, shows the bubble to stand the same as it does when the level is placed on a parallel part of the shaft, as in the figure at B. When the bars are thus temporarily set, the liners, or pieces of iron, may be fitted to the proper thickness, so that the gland will pass in and out of the stuffing box easily by hand, no matter in what position the piston may be in the cylinder.

To get the thickness of these liners, take wedges made of iron, wood, or lead, and insert the thin end between the faces of the bars and those of the supports, forcing the wedges in sufficiently to leave a mark upon them. By chalking the faces of the wedges they will exhibit the marks more plainly. The wedges should be inserted at each end and on both sides of the bar, for one bar at a time, the liners being got out a trifle too thick so as to allow some for fitting.

If the liners require to be very thin and are difficult to hold in the vice without springing, take a piece of soft wood faced true, and grip it in the vice, and fasten the liner on it by means of brads driven in around the edge of the liner.

When the four liners are ready place them in position between the bars and their seatings. Bolt the bars firmly in position, wipe them clean and test them lengthwise with the spirit-level to ascertain if they are parallel with the cylinder bore, and place the level across the bars at each end to test parallelism with the engine shaft, as in Fig. 2518, and, having noted where further adjustment is necessary, put marking upon the bars and move the cross head back and forth to ascertain how much the respective liners require reducing. If the gland is a fit upon the piston rod and in the stuffing box, moving the gland in and out of the stuffing box will be an admirable test of the guide-bar adjustment.

The straight-edge should also be applied to test if the surfaces of the bars lead true one to the other; thus, in Fig. 2519, A and B are the bars and E the straight-edge, which by being pressed

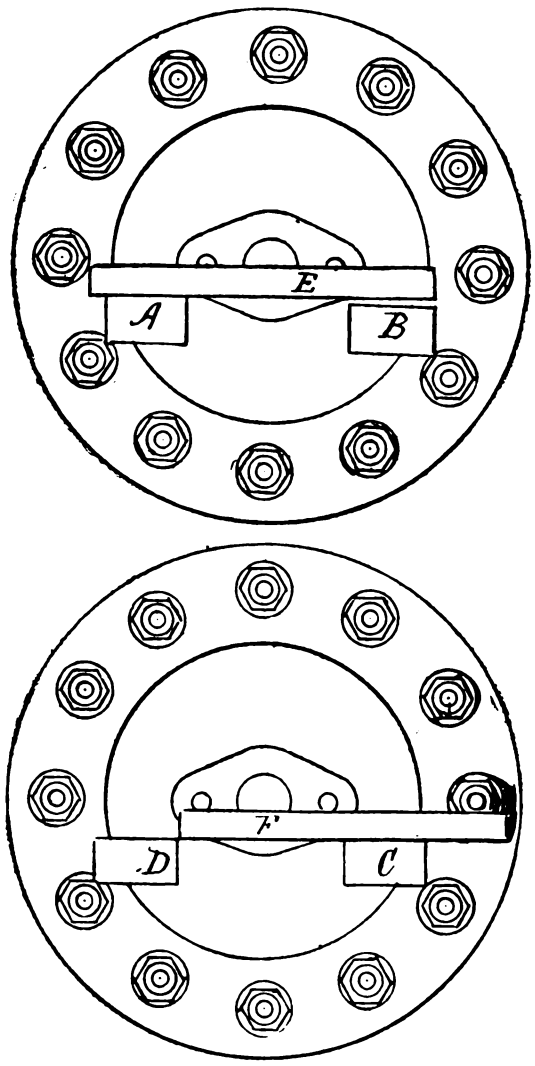

Fig. 2519.

firmly to the surface of A discloses that the surface of A is not in line with B, because if it were so the straight-edge would meet the face of B as in Fig. 2519, where the straight-edge F pressed to the surface of C leads true to the surface of the bar D. All four of the bars require testing in this manner. If the seatings for the bars or the liners are not made flat and of equal thickness, or if from any other cause the bars do not bed properly upon the liners, then bolting up the bars will spring them as shown in Fig. 2520, in which, at A, is shown a bar sprung in the bolting up, because the liners fit at the ends B C only; while at E is shown a bar sprung or bent because the liners fit at the ends D D only. In either case the cross head would be forced to travel in a curve, bending the piston rod, and inducing much friction. The way to test the bars in this respect is, after the above operations, and before loosening the bolts, place a long straight-edge lengthwise along each bar and move it laterally at one end. If it swings from the centre the bar is rounding, while if it shuffles across first at one end and then at the other the bar is hollow in its length and we must find at which end of the bar this spring exists.

To do this, slightly slacken the bolt or bolts at one end and again apply the straight-edge, if the spring is removed the error lies in the bedding of the liner at that end. If not removed, retighten the bolts at that end and slacken those or that at the other end, and again apply the straight-edge, and thus may it be determined how much of the spring is due to each of the liners, and this must be remembered and allowed for in filing the liner to its final adjustment. Before putting the liners in a second time it is better to give them a light coat of marking to show where they bear. At each trial of the bars the spirit-level and straight-edge should be applied and the cross head should be moved back and forth to show by the bearing marks how the cross-head guides fit to the bars. These marks are a great deal finer test than any spirit-level adjustment, hence the last part of the fitting should be performed with strict reference to the bearing marks upon both the bars and the cross-head guides as well as upon the liner, the cross-head

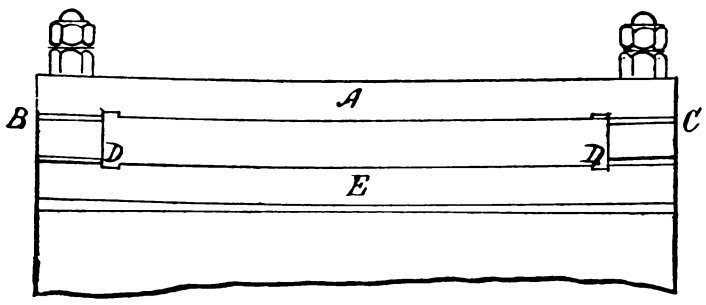

Fig. 2520.

flanges being adjusted and fitted at the same time as the face fitting.

To set the top bars place the cross head in the middle of its stroke, and place them upon the cross-head guides. Then, with the wedges applied as before, ascertain the required thickness of the respective liners one at a time, leaving them, as previously, a trifle too thick, and testing them while fitting by marking placed upon their faces. The top bars may be entirely adjusted from the contact marks left by the cross-head guides when moved along the bars, thus dispensing with the use of the straight-edge and spirit-level.

As the bolts supporting the bottom bars often require to be loosened to get the top bars off, pieces of wood may be placed beneath the bottom bars to retain them in position when the bolts are loosened. These pieces must be removed during the testing, for if left so as to wedge the bars they may spring them, and thus mislead in the adjustment. After the top bars are adjusted the whole bearing surfaces should be oiled, and the cross head pulled back and forth by hand without the use of a lever, providing the size of the piston does not exceed about eighteen inches diameter. The bars when set true should be clamped to their seatings and the holes reamed out to receive the proper bolts, and, finally, mark each bolt, bar, and liner to its place.

When the bars, tested with the straight-edge and spirit-level as described, show true, if the gland will pass freely in and out of the stuffing box with the cross head at any part of its stroke, the guide bars are set.

In this operation let it be noted that the close fit of the piston to the cylinder bore and of the gland to the stuffing box is alone depended upon as a guide whereby to so set the guide bars that the axial line of the piston rod and its plane of motion shall be in line with the centre of the crank shaft.

Suppose, however, that the piston head is a new one, and the gland is worn a loose fit to the stuffing box, then setting the bar to the gland would produce the result shown in Fig. 2521, in which the dotted line A A is a line or cord stretched axially true with the cylinder bore, and coincident with the centre of the pillow block at B. The gland being a loose fit permits the piston rod to fall below its proper level, and the surface of the bars, if set by the gland only, without using the spirit-level, would be set true to the full line C C, and therefore out of true line. If the bars are set by spirit-level true to the length of the cylinder bore, the gland becomes useless as a guide to set the bars by. It is a not uncommon practice, when the gland has play, to insert in the stuffing-box bore, at the bottom, a piece of tin or sheet brass, equal in thickness to one-half the amount to which the gland is too small, or to insert a similar piece beneath the piston head if it is

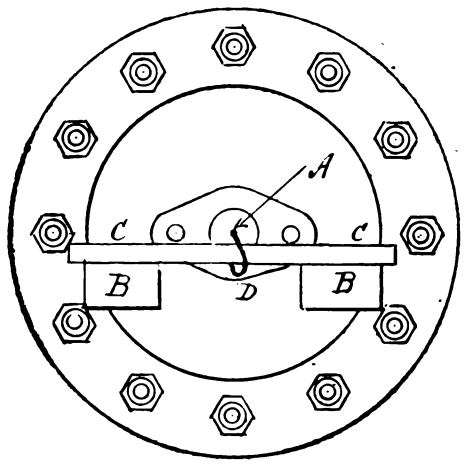

Fig. 2522.

too small. As a rule, however, there will be at least as much play between the piston rod and the gland bore as between the gland and the stuffing-box bore; hence, if there is any play, it is better to discard the use of the gland altogether.

The proper method of setting guide bars by a stretched line is as follows:—

The cord or line is set true to the cylinder bore, and coincident with the centre of the pillow block, as at A A in Fig. 2521, and the two bottom bars are put up in line horizontally with the axial line of the crank shaft, and at a distance below the stretched line equal to one-half the height of the guides for the cross head, as in Fig. 2522, in which A represents the stretched line, B, B the bottom bars, C C a straight-edge, and D a piece of wire whose length from point to point is equal to one-half the height or thickness of the guide blocks. The width apart of the bars is set to suit the width apart of the flanges of the guide blocks on the cross head, by means of a square. The square is applied in the following manner: On a straight-edge mark two lines A and D, Fig. 2523, a distance apart equal to the distance between the flange edges of the cross-head guides. Midway between A and D mark the line C; place the straight-edge across the bars as shown, and when the edge of a square, placed on the straight-edge, coincides with C and the stretched line, and the marks A and D coincide with the edges of the bars, the latter are set true, and will come right for distance apart, and distance from the centre line, supposing the flange edges of the cross-head guides to be equidistant from the centre of the length of the cross-head journal. If, however, such is not the case, the width from A to C and from C to D must be made to suit, C representing the centre of the length of the cross-head journal, D the flange on one guide and A the flange on the other guide. Here it may also be remarked that, if the thicknesses of the cross-head guides vary, or if they are not central to the axial line of the

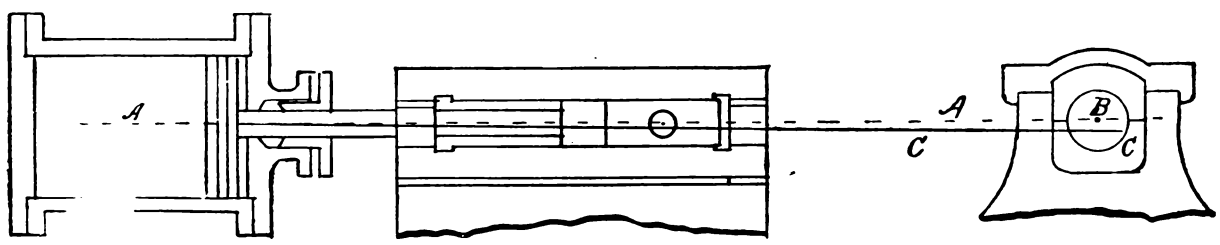

Fig. 2521.

cross-head journal, the bars must be set for distance from A in Fig. 2523, to suit the error, because in that figure the straight-edge is supposed to stand parallel to the axial line of the shaft, as it is also in Fig. 2522, the aim in both cases being to so set the bars that the cross-head journal shall stand parallel with the crank shaft.

It is the liability of variation in the thickness of the guide blocks, and of their not being central to the cross-head journal, that constitutes the disadvantage of setting the bars by lines, it being obvious that the bars must be either set to suit any errors in the

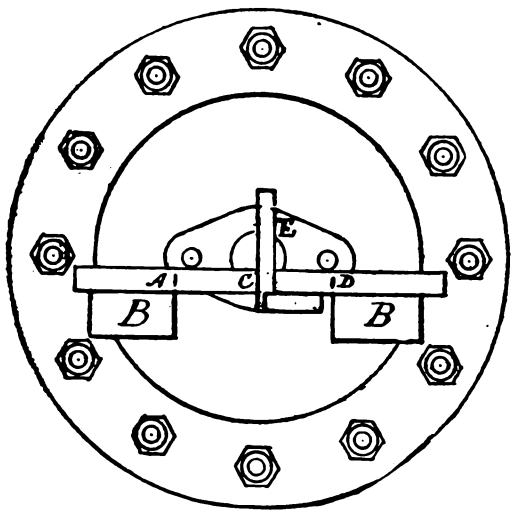

Fig. 2523.

guides, or those errors must be eliminated before setting the bars. The top bars must be set parallel to the bottom ones, at a distance from the bottom ones equal to the thickness of the guide blocks, and parallel to one another. It is preferable to set the top ones with the cross head and guides in place, observing all the precautions as to springing them given in the case of the bottom bars.

The bars thus set will be in line with the crank axle, but unless the piston accurately fits the cylinder bore, they will not long

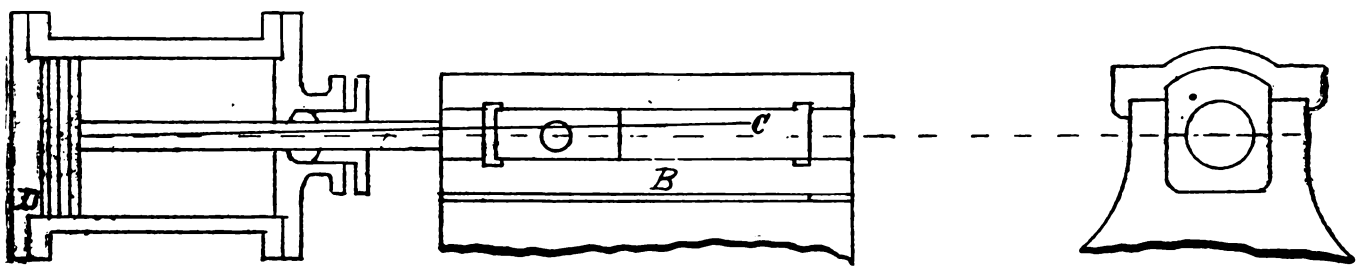

Fig. 2524.

remain in line with the line of motion of the piston rod. For example, Fig. 2524 shows a piston head too small for the cylinder bore, the guides fitting the bars properly, and the gland and stuffing box fitting the piston rod; the piston will be suspended in the cylinder, its overhanging weight being supported by the guides B, the gland, and packing ring. This would cause friction and rapid wear of the gland bore and guide surfaces in a direc-

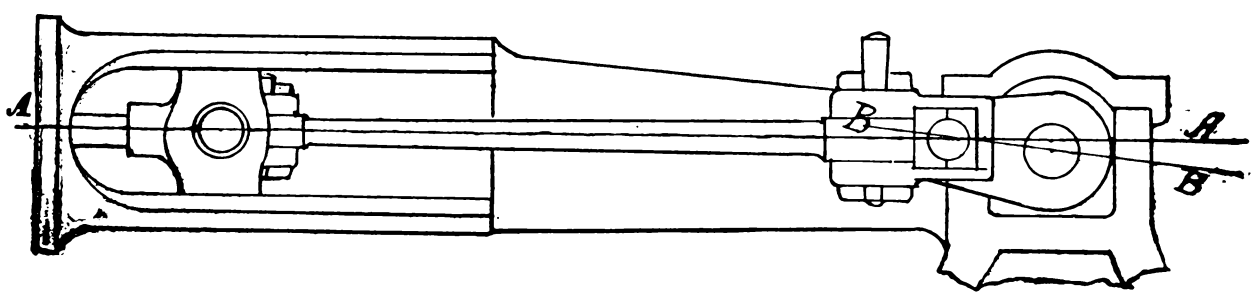

Fig. 2525.

tion parallel to the line C, which would gradually let the piston fall to the bottom of the cylinder bore, touching at the end of D first. In some engines provision is made to adjust the piston to take up its wear, which is, it will be seen, a great advantage.

THE HEATING AND POUNDING, OR KNOCKING, OF ENGINES.—The heating of any part of an engine occurs from one of two causes, viz., either the fit of the parts is too close, inducing undue friction, or the parts are not in line.

When the former is the cause the remedy is to ease the fit. If the parts are not in line, the heating may also be remedied by loosening the fit of the parts; but this will often induce a pound or knock, hence the true remedy is to properly align the parts.

The location of a pound may be discovered by placing a piece of metal wire between the teeth, and resting the other end of the wire upon each end of the cylinder, guide bars, and bearings of the main shaft, repeating the operation in each place, and the sense of feeling will distinctly indicate the location of the knock, by imparting a more severe shock to the teeth when the vicinity of the knock is approached.

The most prominent location of the causes of a pound are, first, in the crank pin, from causes to be hereafter explained, and from its wearing oval at the cross-head journal; and second, at the ends of the cylinders, or the ends of the guide bars, because of a ridge forming there as the wear proceeds.

A crank pin cannot wear oval if the brasses are kept adjusted to fit it, because in that case the brass bore must wear it round; but if there is any play it wears oval, because the pressure of contact between the journal and the brass bores is least when the pin is at and near the points of dead centre, and the most when it is at and near half stroke.

The cross-head pin wears oval because the pressure between the pin and its bearing is in a line with the connecting rod, and there is but little wear on the pin in a direction at right angles to the rod.

Ridges form at the ends of the cylinder bore and at the ends of the guides for the following reasons:—

Referring to the cylinder, the location of the piston stroke in the cylinder bore alters as the connecting-rod keys pass through the rod, because that alters the length of the connecting rod, and therefore the path of the cross-head guides on the guide bars, and also that of the piston in the cylinder.

As the piston rod is shortened there is less wear at the extreme end of the cylinder bore farthest from the crank, and the same remark applies to the guide bars.

If the piston head travels past the end of the cylinder bore and into the counterbore at each end, a distance equal to the amount of taper on the connecting-rod keys, or equal to the amount the connecting-rod length will alter while those keys are passed through the rod (to take up the journal and brass wear), the piston head will (if the rod is kept to its original length within that amount) always travel to the end of the cylinder bore, and no ridge should form on account of the length of the rod altering; but even then a slight ridge may form because the wear is naturally less at the ends. Thus in the middle of the cylinder length the whole thickness of the piston head, piston rings, and of the follower passes over the bore, while at the ends only the flange of the piston head at one end and the follower at the other passes over the metal of the bore; hence the friction and wear are less.

The ordinary cause of pounding and heating is a want of truth in the alignment of the crank pin, or in that of the cylinder, main shaft, or guide bars.

The method to be employed to line an engine, or to discover if it is out of line, depends upon the design of the engine and its condition; thus an engine having a Corliss frame has the slides to receive the cross head made at a true right angle to the end face which meets the cylinder end; equidistant from the centre of the gland hole or axis of the piston rod, and the end of the frame fitting either the bore of the piston or the turned flange of the cylinder cover; hence the guide bars must be true if the frame is got up true, the fit of the frame end to the cylinder end insuring truth in the guide or cross-head slides, providing that the centre line of the frame, during the turning and planing operations, leads from the centre of the cylinder end of the frame to the centre of the crank-shaft brass; or, in other words, the planing and boring of the frame must be true with a line running from the centre of the cylinder end of frame to the centre of location for the crank shaft. This will not only cause the outside of the frame casting

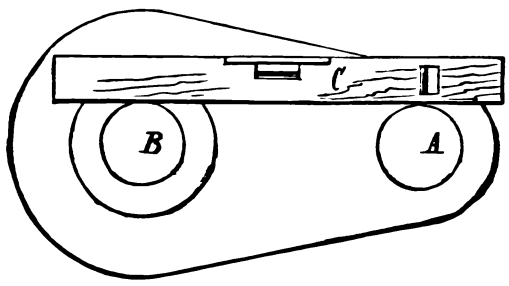

Fig. 2526.

to stand at its proper level when the cylinder bore stands horizontally level; but it will insure that the crank-shaft bearing brasses both be of equal and of a proper thickness through the crown.

The engine being properly lined at first will not be liable to get out of line, excepting so far as affected by the wear of the crank-shaft bearing, which will cause the crank shaft to drop, as shown in Fig. 2525, where A A represents the true centre line of the cylinder and guide bars, which, when the crank is in the position shown in the cut, should be coincident with the centre line of the connecting rod and the crank, but the crank brass having worn below the centre line of the connecting rod and crank, the crank will get out of line as denoted by the line B B.

As a result, a portion of the piston movement and pressure which should be exerted on the crank after leaving the dead centre, will be exerted on it before it reaches the dead centre, thus causing a back pressure, involving a loss of power. Furthermore, the relative position of the eccentric to the valve gear will be altered, impairing the proper set of the valves; hence it follows that the wear of the crank bearing in this direction should be taken up (by raising the lower brass) before it becomes excessive. To find how much the bottom brass requires raising, or whether it requires raising or not, find the centre of the crank shaft, and from this centre strike the circle B, in Fig. 2526, whose diameter must equal that of the crank pin A, and place the edge of a spirit-level coincident with the perimeters of the crank pin and circle, as shown in the cut. When the bubble of the spirit-level stands in the same position as it does when the level is placed upon the bore of the cylinder or along the piston rod, the crank will be in line with the cylinder bore.

As a rule, the cylinder bore of a horizontal engine stands horizontally true, and the crank centre line should also stand so when the crank is on its dead centre, but if such is not the case the crank centre line must nevertheless stand true with the axial line of the cylinder, when the crank is on the dead centre.

If, instead of having a Corliss frame and fixed guide bars, the engine has a flat bed and adjustable guide bars, as shown in Fig. 2527, the operation is as follows:—

In setting up a new engine it is obvious that if the flanges of the cylinder are planed parallel with its bore and at the proper distance from its axial line, and the pillow block is made of the proper height, a line stretched axially true with the cylinder bore will pass through the centre of bore of pillow-block brasses, or be equal in height from the engine bed; but the length of the cylinder being only about one-fifth of the distance from the cylinder to the centre of pillow block, any error in the planing of the cylinder flange true to the cylinder bore becomes magnified five times at the pillow block; hence it is necessary to stretch a line through the cylinder bore and set the cylinder so that the line, being axially true with its bore, will pass the pillow block at the centre of the bore of its brasses. This is sometimes done by inserting thin pieces of sheet tin, metal, or even paper beneath the cylinder flanges and the bed, and in the requisite positions. The method of stretching the line is shown in Fig. 2527. F is a device for holding the line at that end. It consists of a frame in the form of a cross, with adjusting screws at the end of each arm, and a small hole at its centre to receive the line. The other end of the line A must be secured, under as much tension as the line will safely bear, to a piece of wood clamped to the engine frame at R. The adjustment of the line is made by measuring its distance from the walls of the bore of the cylinder at one end and of the bore of the gland hole at the other end, using a pair of inside calipers or a wire gauge. The latter should be bent in its length to admit of adjusting the same by straightening to increase, or still further bending to diminish, its length to suit the requirements.

The wire, when applied, should only just meet or touch the line and not bear the least hard, or it will spring the line, causing an error of adjustment that will be serious when multiplied by the length of the line to the pillow block as compared with the length of the cylinder bore.

If the pillow block is planed on its bottom face and has its brasses fitted, the latter may be marked off for boring from the line A, Fig. 2527, when stretched to set the cylinder, thus avoiding a second adjustment of the line A A.

Suppose now that it is required to line the brasses in the pillow blocks true to be bored (the pillow blocks being bolted in position). The distance of the face P, of the brass from the stretched line A, in Fig. 2527, must equal the distance from the centre of the length of the crank-pin journal, to the face of the large crank hub, and this distance may be shown by a line marked on the edge of the brass flange.

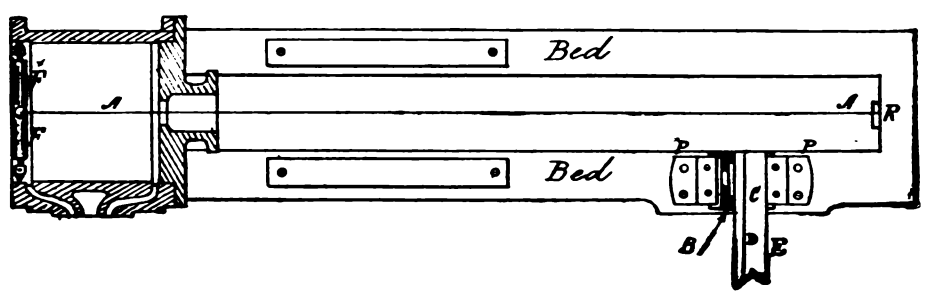

Fig. 2527.

Place a straight-edge C, Fig. 2527, having a line D parallel with its edge E, so that this line will be in the centre of the width of the pillow-block jaws, and at a right angle to the line A. The line D will then represent the axial line of the crank shaft, and may be used as the centre from which to mark the lines on the brasses used to set them by for boring. To test if A and D are at a right angle, or to set D to A, a large square should be used. If the side face P P of the pillow block stands parallel to A, as it should do when it is true, it will serve to chuck the pillow block by, thus boring the brasses in their places in the pillow block, with the centre line of the bore at a right angle to P. If otherwise, two flat places should be filed on the brasses, as shown in Fig. 2528, in which C is the straight-edge, and A the stretched

line as before, H and I representing the flat places whose distance from A, as shown at J J, may be made to represent the thickness of the crank from its large hub face to the centre of length of crank-pin journal; hence the depth of the flat places will show how much to take off the face of the brass to leave it of the proper thickness.

A straight-edge placed across these flat places, or true to the lines H I, must stand at a right angle to the line D, so that by setting the brasses by the flat places they will be bored to stand at a right angle to A. To set the brasses the other way a circle is struck from D, as a centre, upon the faces of the brasses as in the end view, Fig. 2528, in which the straight-edge C is shown wedged in the bore of the brasses, which is the most convenient way when it can be done.

The line D is carried down on the end face of the straight-edge, and the latter is used as a support for the compass points while striking the circle M, which is defined more clearly by indenting it with fine centre-punch marks. The height of the centre for bore of brasses may be carried from the centre line of the cylinder A A to the end of the straight-edge C, by placing another straight-edge across the engine bed and measuring from the end of C to A.

Suppose now that the brasses are bored, and the position of the pillow block is to be set, and the process is the same, the line D being marked true from the bore of the brasses, and the pillow blocks adjusted until D is at a right angle to line A A.

line to enable connection at the other end without springing or bending the rod.

Furthermore, it often happens that the frame work of an engine does not form a base for the whole of the parts, thus in a large stationary engine, the end of the main shaft or crank shaft farthest from the crank (generally called the *outboard* bearing) is generally supported by a bearing having an independent foundation, and as this foundation does not exist until the engine comes to be permanently fixed for operation, its alignment must be performed when setting the engine. In an old engine this foundation may settle, or the wear itself may throw the engine out of line, so that the lining of an engine becomes periodically a necessity.

As a general rule a want of alignment induced by wear or incurred from repairs to the parts principally affects the main shaft, the cross head remaining more nearly true; and, with the exception of the crank pin, the same holds good with reference to a new engine.

Now while an error of alignment may exist in any direction, it is true, nevertheless, that an error in any direction will be discoverable if the parts be tested at four equidistant parts of the stroke or revolution, as, for instance, on the two dead centres of the crank and at the highest and lowest points of the path of rotation of the crank pin; hence attention may be confined to those four points.

Suppose then an engine already put together requires to be tested for being in line, and we have to test—

1st. The alignment of the main or crank shaft vertically.

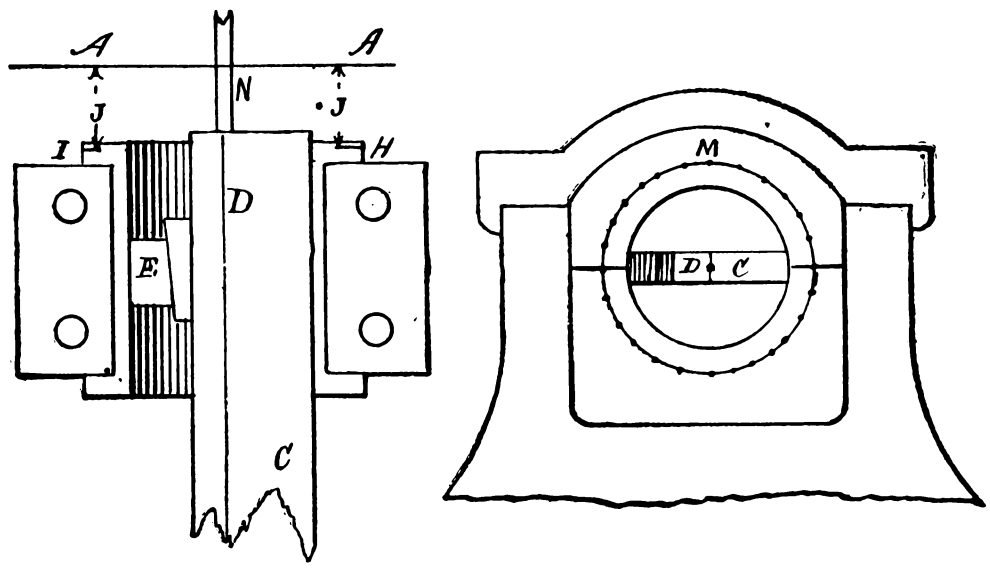

Fig. 2528.

Though in a new engine every part may be made as true as possible in the details of manufacture, yet when the parts come to be put together errors of alignment will generally be found to exist. These errors may be too minute for discovery in the separate piece, and yet form important defects in the finished engine.

In rough practice these defects are left to remove themselves by abrasion and wear, the process being to allow the parts to be somewhat loose (wherever possible) in their adjustment, and adjust them closer as the abrasion proceeds.

This is termed letting the parts *wear down to a bearing*. But the very process of wearing *down to a bearing* attests that the parts have not been properly fitted to a bearing, whereas to attain the best possible results the parts should be fitted to a bearing, because in wearing down to a bearing, undue abrasion, and to some extent or in some degree, roughness of the wearing surfaces, must ensue, because the strain intended to be distributed over the whole *intended* bearing area is limited to the *actual* bearing area. It is necessary, therefore, that, in putting an engine together, each part be properly fitted to its place, and that it be subsequently adjusted in its fit and position with relation to the other parts to which it is connected.

The fitting of the single piece is a test of its individual or disconnected truth; the subsequent or second adjustment is a test of its truth with relation to the others. Thus a pair of brasses may fit a journal perfectly, but that is no assurance that the brasses are so bored as to bring the rod holding them in proper

2nd. The alignment of the main shaft horizontally.

3rd. The axial truth of the crank pin with the main or crank shaft.

4th. The adjustment of the crank shaft for vertical height, with relation to the cross-head journal.

Referring to this last, it may be necessary to remark that the axial line of the main shaft may be parallel when viewed either vertically or horizontally with the cross-head journal, and yet if a line be passed through the centre of the cylinder bore, and prolonged past the crank centre, the latter may fall above or below that line, but it will generally be below, because from the weight of the crank shaft its bottom bearings wear the most; and, further, to whatever extent those bearings wear after being in proper line, the crank shaft will fall too low.

We may now subdivide the errors of alignment of a crank shaft thus:—

1st. Its axial line, when viewed vertically, may form an acute angle to the axial line of the cross-head journal.

2nd. It may form an obtuse angle with the cross-head journal when so viewed.

3rd. It may, when viewed from the crank-pin end of the engine on about a horizontal position, be too high or too low at the crank-pin end only.

4th. It may be too high or too low at the outboard end only.

5th. It may be too high or too low at both ends, although parallel to the cross-head journals.

It will be found on consideration that with the exception of the

last-named case, the connecting rod forms the best test whereby to discover an error in any of these directions, because it magnifies the error and makes it more plainly discernible. It will further be found upon careful observation, that although a combination of these errors may exist, the connecting rod will serve to discover each error separately, as well as the collective error, because, although in some respects two distinct errors may have the same general result, yet the result will be different if taken in detail, and it follows, therefore, that the testing must be taken or made in detail first.

To test the parallelism of the axial line of the crank shaft with that of the cross-head journal, when viewed vertically: In Fig. 2529, let A A represent a line true axially with the bore of the cylinder, and B B a line at a right angle to A A, and passing through the centre of the pillow block or bearing spaces. If the engine were in line, B B would be coincident with the axial line of the crank. Suppose, however, that line B C represents the actual centre line of the crank, not then being at right angles to A, the end E of the connecting rod, if connected to the crank pin as shown, and made a good working fit so that there is no play of the pin in the brasses, will not come fair laterally with the bearing in the cross head. The amount of the error is the amount it is out of true in the length of the crank-pin journal, multiplied by the product of the length of the connecting rod (from centre to centre of the bores of the brasses) divided by the length of the crank-pin journal. It is apparent, however, that if the crank shaft be set to have its axial line at B B instead of at B C, the error at E D will be corrected, and thus we may employ the connecting rod to set the crank shaft in line.

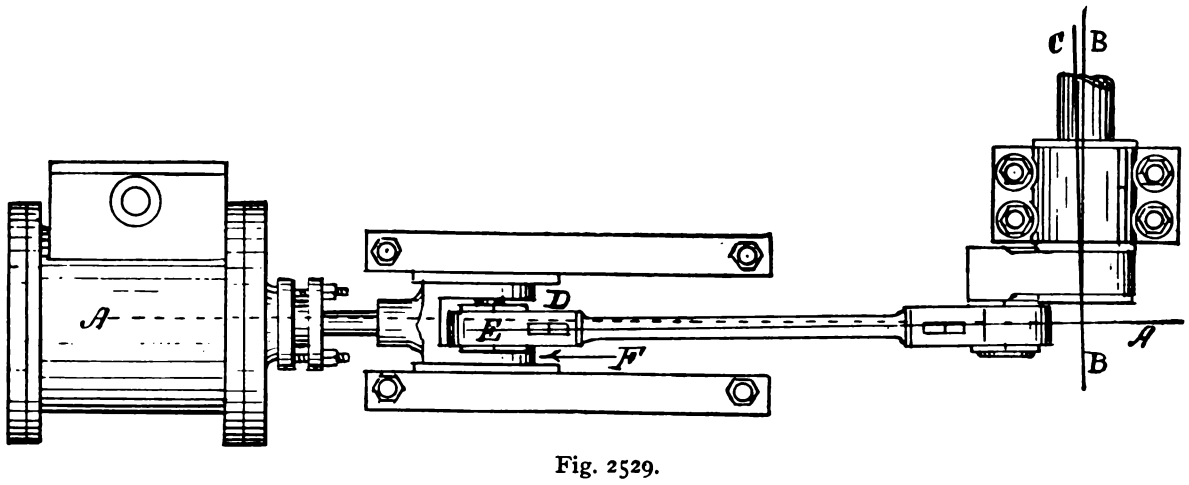

Fig. 2529.

It is, however, not sufficient to try the crank on one dead centre only (as will be seen presently), hence we place it on the other, and move the cross head to the other end of its stroke, and again try the end E of the connecting rod with the cross-head journal, and if it falls to one side, and *on the same side as before, but to a less amount*, it demonstrates that the axial line of the crank forms with the line A A an acute angle. If, however, instead of falling too much laterally towards the side F of the cross head, it fell too much towards D, but more so when tried with the crank on the dead centre nearest to the cylinder than when tried with the crank on the other dead centre, then it is proof that the axial line of the crank shaft forms with A A an obtuse angle.

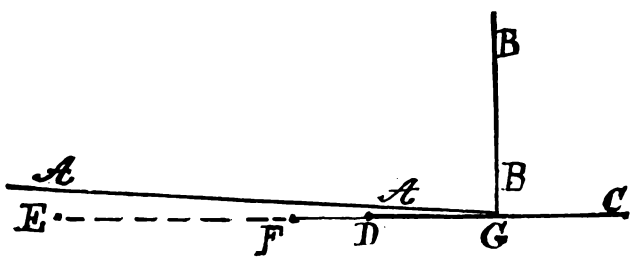

Fig. 2530.

The reason that the error will be more plainly shown with the crank on one dead centre than when on the other is shown in Fig. 2530, in which A A is a line coincident with the axial line of the cylinder bore, and B B the axial line of the crank shaft, from C to D is the plane of revolution of the crank pin, while G represents the crank centre. The points at C and F denote points central to the length and diameter of the crank-pin journal. Now, the centre line of the connecting rod for one dead centre is represented by E D, and for the other by F C, and it will be seen that the point at E is farther from A than is the point at F. It will be observed that the point D falls *outside*, while the point C falls *inside* of A A, and yet the centre line of the connecting rod stands, in both cases, at the same angle to the centre line A A of the engine, and in both cases throwing the end of the connecting rod, represented by the points at E F, *outside* the line A A.

If the connecting rod does not, when connected to the engine, as in Fig. 2529, fall true into the cross-head bearing, the error is the same *in amount* and comes on the outside of the cross-head journal with the crank placed on each respective dead centre, it is proof that either the flange of the crank-shaft brass (which is between the crank face and the frame) is too thick, or the inside flange of the connecting-rod on the crank pin is too thick, or else the crank is too thick, measured from the crank-pin journal to its inside hub face, the error being in the new crank or new brass, if one has been put in.

It may here be remarked that if the bore of the crank-pin brasses of the connecting rod is not at right angles to the centre line of the rod itself, the end E, Fig. 2529, might fall either inside or outside, laterally, of the cross-head bearing, but in this case the error will show more at one end of the stroke than at the other, for reasons which are explained with reference to Fig. 2530;

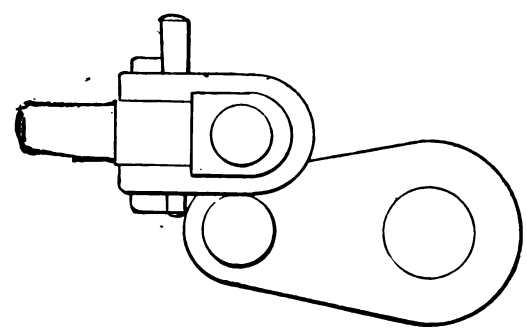
Fig. 2531.

hence it follows that the connecting-rod brasses should be properly fitted to their journals, and made to lead true before using the rod to line the engine by. In some cases it is more convenient to connect the rod at the cross-head end, and try the other end with the crank-pin journal, as shown in Fig. 2531. In this case, however, the connecting rod will (whenever the axial line of the crank shaft is out of square, forming an acute angle with the centre line A A, as in Figs. 2529 and 2530), fall laterally inside the crank-pin journal when on one dead centre, as in Fig. 2531, and outside when on the other dead centre, as in Fig. 2532, the respective amounts of error being in this case equal for the two positions. The reason for this is that the plane of revolution

of the crank pin falls outside of the centre line in one case, and inside for the other, as shown in Fig. 2530 at D C.

If the axis of the crank axle formed an obtuse angle to the engine centre line A A in Fig. 2529, the connecting-rod end tried with the crank pin, as shown in Fig. 2531, would fall outside of

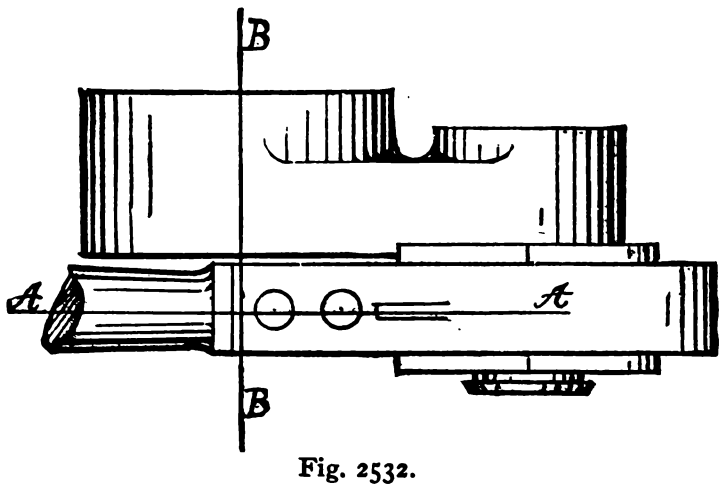

Fig. 2532.

the crank-pin journal when the latter was on the dead centre nearest to the cylinder, as shown in Fig. 2534, and inside of the crank-pin journal when on the other dead centre, as in Fig. 2535.

Now, suppose either of the errors to exist, and the alignment

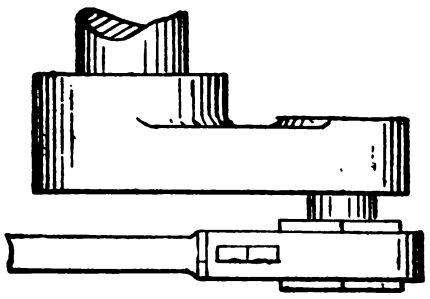

Fig. 2533.

be neglected, then if the brasses at each end be keyed up to fit their respective journals, then the body of the rod must be bent into a bow shape, and the strain of forcing or springing it into this shape will fall upon the journals, which will heat and pound in consequence.

It is now to be explained how to test if the axial line of the crank shaft is at a right angle to that of the cross-head journal, when viewed from the crank-shaft end and horizontally.

From a want of parallelism in this direction, heating of the crank pin and cross-head journals is *sure*, and a pound or thump is, to some extent, liable to occur, and the cause, if the error is slight, is difficult to discover, save by using the connecting rod to test it with.

When a thump occurs at the end of the stroke (when the crank is on a dead centre), it may arise from a ridge at the cylinder, or at the guide-bar end, or from the connecting-rod brasses being

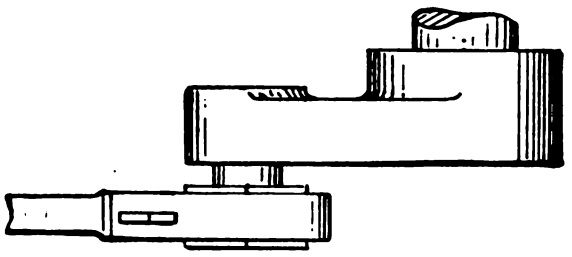

Fig. 2534.

insufficiently keyed up; but when it occurs while the crank is at half stroke these causes are eliminated, and the cause must be looked for in either a crank pin not parallel to the crank shaft, or, as in the case now under consideration, because of one or the other of the crank-shaft journals being too low.

Assuming the crank pin and crank shaft to be axially true, one

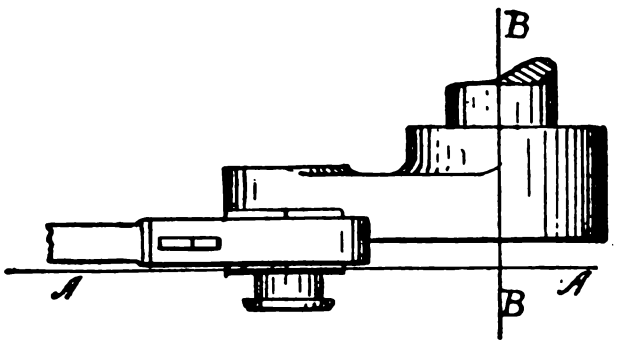

Fig. 2535.

with the other, we may proceed to show separately the cause of the heating and that of the pounding, if the crank journal is too low at either end.

In Fig. 2536, let A represent the cross-head journal, and B B a line parallel to it. Let B C represent the axial line of the crank shaft (being out of parallel because the crank end is too high or the other end too low). Let F F represent the centre line of the crank pin when at the top, and G G when at the bottom of its path of rotation, and it will be observed that the vertical distance between the crank pin and the axial line of the cross-head journal

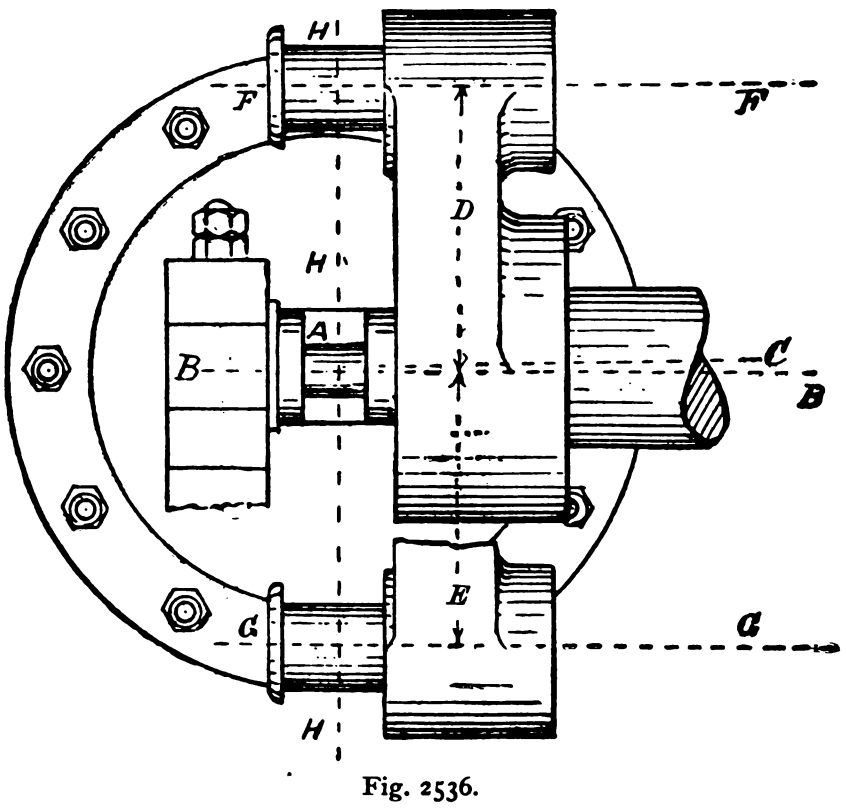

Fig. 2536.

is less on one side than on the other; thus in the figure distance D is less than E. We have in this case measured these distances on a plane at a right angle to the cross-head journal, but it will make no difference if we measure them on a plane with the path of rotation of the crank pin, as will be seen in Fig. 2537, in which the distance from the centre of the crank pin at two opposite points in its path is represented by dots shown at E F, and from E to H measures less than from F to H, H representing the centre of the cross-head journal.

In Fig. 2537, let A represent the axial line of the cross-head

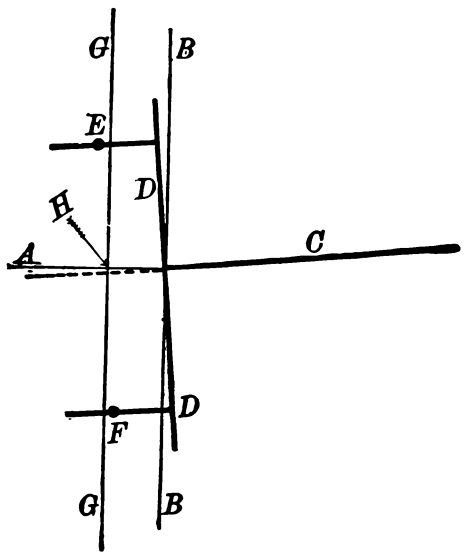

Fig. 2537.

journal, B a vertical line at a right angle to A; C representing the crank shaft extended by a dotted line, so as to enable comparison with A; D the crank, E and F the centre of the crank-pin journal, and G G a line at a right angle to cross-head journal A.

Now G, being at a right angle to A, represents what should be the plane of rotation of the crank pin, whereas C, being out of parallel with A, causes the path of rotation to be in the path from

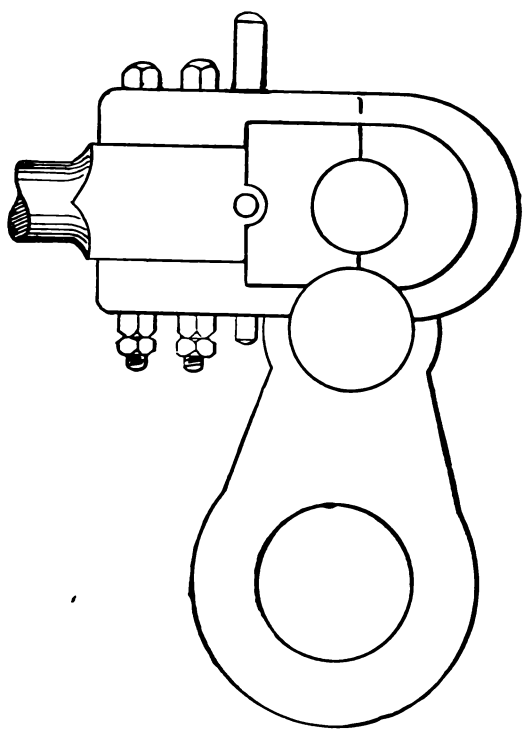

Fig. 2538.

E to F, or as D compared to B; supposing then that the bores of the connecting-rod brasses to be axially parallel one to the other, and keyed up properly, and when at E one bore of those brasses will stand parallel to E while the other is parallel to A, or when at the bottom of the crank rotation, one bore will be parallel to F and the other parallel to A. Thus the rod will be twisted, and the strain due to this twist will cause the bearings to heat. That this twisting is continuous throughout the whole revolution may be seen by the want of parallelism of the dotted line (representing the crank pin when on the dead centre) with A (representing the cross-head journal).

It is now to be observed that if the plane of the crank rotation were at a right angle to the axis of the cross head, as it should be, the path of the centre of the crank-pin journal would be in the plane of G G, whereas it falls outside as at E, and inside as at F, while at H it is coincident; hence it appears that starting from a dead centre H, the rod bends, passing at that end outward to E (when the crank has made a quarter revolution), where it attains its maximum bend, thence diminishing until finally ceasing, when the crank reaches the other dead centre. As soon, however, as it passes the last dead centre a bend in the opposite direction takes place, attaining its maximum at F, and ceasing at H. This bending also causes undue friction and the consequent

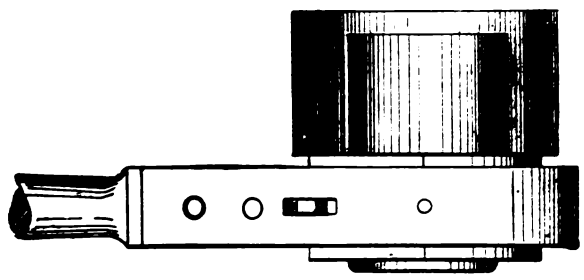

Fig. 2539.

heating of the journals; furthermore, if there be any *end* play between the brasses and the journals, there will be a pound, as the brasses jump from one end of the journal to the other at different parts of the stroke. It is obvious that if the crank end of the crank shaft was too high instead of too low, as in our example, then the effects would be the same, but E would fall on the inside instead of the outside of G, while F would fall outside instead of inside.

To discover if the crank shaft is out of parallel in the direction here referred to, connect the connecting rod to the cross-head journal, setting the brasses up to a close working fit. At the other end of the connecting rod put the strap keys and brasses in their places, but not on the crank-pin journal. Place the crank in its highest position, and lower the end of the rod down to the crank-pin journal, as shown in Fig. 2538, and if the crank shaft is parallel (in the respect here referred to) to the cross-head

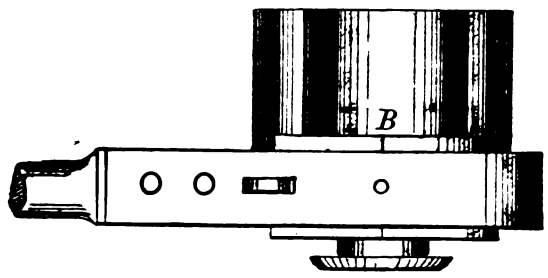

Fig. 2540.

journal, the brass flanges will just meet the faces of the crank-pin journal, as shown in Fig. 2539. If, however, the crank end of the crank shaft is too low, as in our example, the flanges of the brasses will fall to one side of the crank-pin journal, and that side will be toward B, Fig. 2540, when the crank pin is at the top, and toward C, Fig. 2541, when it is at the bottom of its path of rotation.

The effects will be precisely the same, and in the same direction with relation to the various parts of the crank's revolution, if the crank-pin end of the shaft was of correct height; but the other end was too high, hence, in correcting the error, it is desirable to place the engine on the dead centre, so as to determine which end of the shaft to operate on—that is to say, whether to raise the crank-pin end or lower the other end. But suppose the error to be that the crank-pin end of the shaft was too high instead of too low, then, the testing being continued as before, the effects will be

of the same general character, but altered with relation to the specific parts of the revolution. Thus, when the crank is at the bottom, the rod would fall towards A, Fig. 2542, and when at the top, it would fall in the opposite direction—that is, towards D, Fig. 2542.

We now come to one of the most common errors in the alignment of the parts of an engine, and to the one that it is the most difficult to locate or discover, namely, a want of parallelism between the axial line of the crank pin and that of the crank shaft.

This generally arises from improper methods in the chucking of the crank to bore it, or from errors induced in fastening the crank to its shaft. The results are precisely alike in both cases, supposing, of course, the errors to exist in the same direction in the two cases.

The error in chucking usually consists in planing one surface of

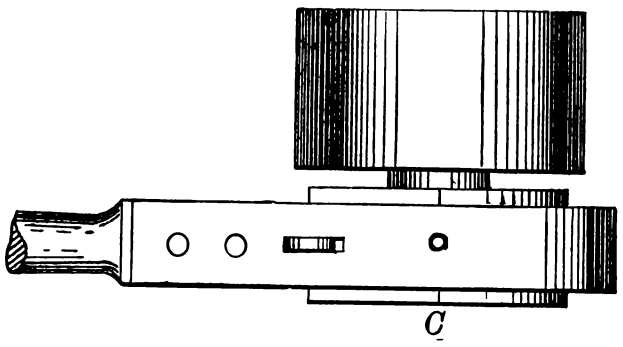

Fig. 2541.

the crank, and bolting the planed surface against the chuck to bore both crank holes. In this case the crank holes will be out of true to twice the amount the lathe face plate may be out of true, and to whatever amount the crank may alter its form from having its surface metal removed.

To avoid these errors the large bore and its hub face should be turned at one chucking, and this hub face should be bolted to the face plate for the second chucking, the small end swinging free, except in so far as the ends of the plates may touch against it to steady it.

The error in putting the crank on may occur from the key springing the crank out of true, and if the crank is shrunk on from too great an allowance for shrinkage or improper heating for the shrinkage or contraction, as it is sometimes termed. Referring to the error in keying, it is more liable to occur when the crank bore and its seat upon the shaft are made taper, than when made parallel, because it is a difficult matter to insure accuracy in the fit of the

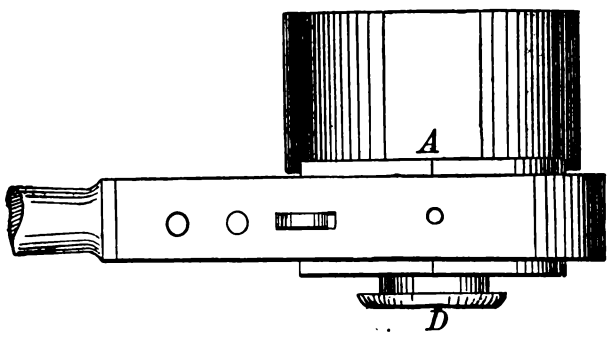

Fig. 2542.

taper, and the key pressure will spring the crank over on the side at which it is the easiest fit. In Fig. 2543 let A represent the end of the crank shaft; B the key, and C the crank shown partly in section: suppose the crank bore (whether made taper or parallel) has a slightly easier fit on the side D than on the side E, and the pressure of the key (supposing it to fit properly top and bottom) would spring the crank over in the direction shown in the figure, the axial line of the crank pin standing at the angle denoted by the line F, instead of parallel to the axial line of the shaft. Suppose the crank to be put on by hydraulic pressure, and the key to fit on the sides and not on the top and bottom, then its fit to its seat on the shaft would depend on the truth and smoothness of its bore and seat on the shaft, the amount allowed for the forcing fit and the amount of the error. If the latter amount was so small that the crank would fit at both ends, but simply fit tighter at E E than at D, the crank would remain true, but might possibly get loose in time. This would be especially liable to occur if the tool marks on the bore and seat were so deep that the contact was mainly at the tops of those marks or ridges which would be apt to compress. But if the surfaces were cylindrically true and smooth, and the amount allowed for forcing was sufficient as stated to give the bore and seat contact at D, with a key fitting sideways, the crank would probably remain tight and true.

Were the bore and its seat parallel the crank would remain true,

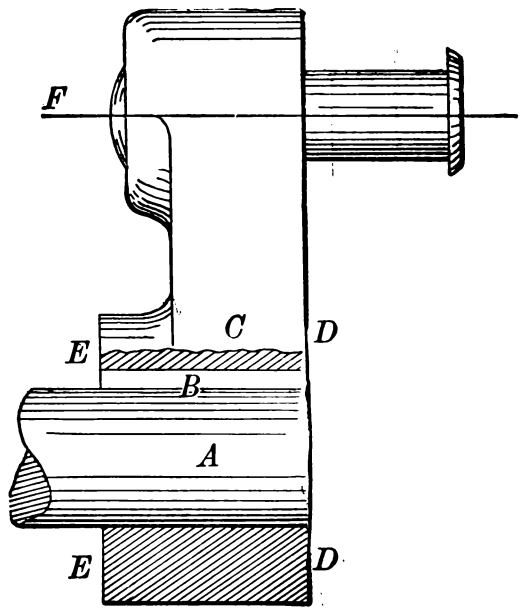

Fig. 2543.

no matter whether the key fitted on the sides or at the top and bottom, providing the key fitting top and bottom were bedded fairly from end to end.

When the surfaces are not smooth, but contain tool marks or ridges, an unequal pressure of the key at one end, as compared to the other, sets the crank over, as shown in the figure, because the key pressure compresses the ridges and lets the crank move over.

Supposing the strain of the key, or keys, to be depended upon to hold the crank, they must fit top and bottom, and their accurate fit becomes of the first importance; because not only is it necessary that they fit equally at each end, but they must also fit equally across the width of the key at each end. For example, in Fig. 2544 is a key binding most at the opposite corners, as denoted by the

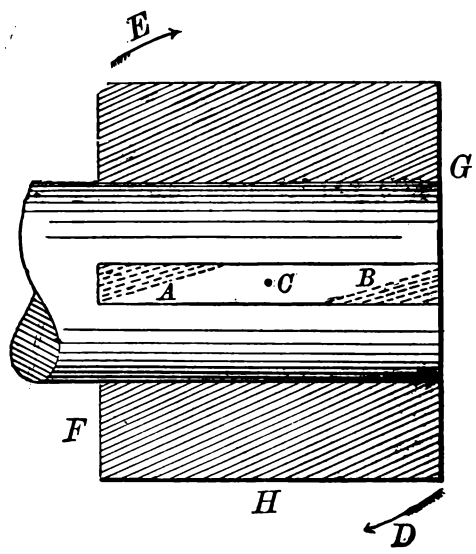

Fig. 2544.

dotted surfaces A B, and the result will be that the key pressure would tend to twist the crank in the direction of D E, having C as a centre of motion, providing that the error was equal at A and B; but in proportion as the error was greatest and the fit tightest at A, or at B, would the centre of motion be moved nearer to either point.

Supposing now that the crank is to be shrunk, or contracted on, then the points of consideration are (supposing the crank to fit properly to its seat, whether the same be either parallel or taper) that the hub of the crank opposite to the throw is the weakest and

is likely to give most in the process of contraction, so that if one part (as F) of the crank be made hotter than another (as G) it will give way more, and this will twist the crank. This is specially liable to occur if an excessive amount of difference in the bore and seat diameters has been allowed for contraction.

It may not happen that a crank pin is out of truth in a direction in which the error will show plainest when the crank is on its dead centres, or at half-stroke; but if a crank pin, tested in those four positions, fails to show any error when tested by the connecting rod, it will be true enough for all practical purposes, and true enough to avoid heating and pounding, both of which evils accompany an untrue crank pin. Suppose, now, that a crank pin stands out of true in the direction shown in Fig. 2545, in which A A represents

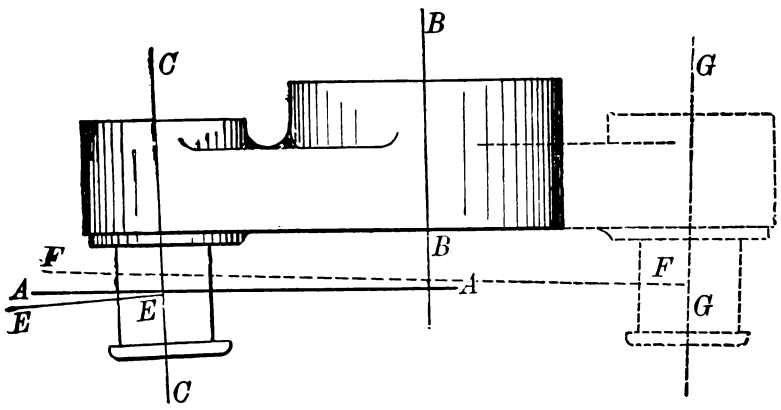

Fig. 2545.

the axial line of the cylinder bore prolonged, and B B the axial line of the crank shaft (the two being parallel or in proper line). Let E E represent the centre line of the connecting rod when the crank is on one dead centre, the axial line of the crank pin being at C C. Then the brasses being keyed up to fit the crank pin, the centre or axial line of the connecting rod would stand as denoted by E E. But the brasses at the other end of the rod being keyed up to fit the cross-head journal, and their lines being at a right angle to the line A A, we have that the rod is at that end endeavored to be held parallel to A A; hence, keying up the connecting-rod brasses on the crank pin would tend to bind the rod, one end standing parallel to A A, and the other parallel to E E.

This would place great strain on the outer radial face of the cross-head journal, as well as on the cylindrical body of the journal.

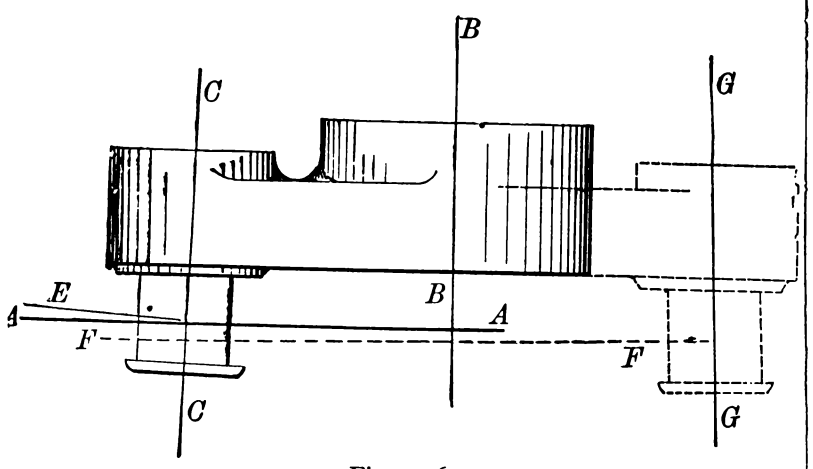

Fig. 2546.

When, however, the crank pin arrives at the opposite dead centre, as denoted by the dotted lines in Fig. 2545 (G G representing its axial line, and F F the centre line of the connecting rod at a right angle to G G), the want of truth in the pin throws the cross-head end of the connecting rod against the inside face of the cross-head journal. Hence, twice in each revolution is the connecting rod bent, and twice does it jam from side to side of the cross-head journal.

It may now be pointed out that if we take either dead centre singly, and connecting the rod at the crank-pin end, try it at the cross-head end, and it will be a difficult matter to determine whether any want of truth at the latter end is caused by the crank pin being out of axial truth, or whether it is the crank shaft itself that is out of line. But there is this difference between the two cases. When the error is due to want of alignment in the crank shaft, the connecting rod will show the error *on the same side* of the cross head, no matter on which dead centre the crank pin stands; but when it is due to the crank pin, the rod will fall inside the cross head on one dead centre, and outside when tried on the other dead centre, as is shown by the respective lines E and F, in Fig. 2545; E being at a right angle to C, and F at a right angle to G.

Again, it has been shown that when the shaft was out of line, a point on the crank-pin journal passed outside of the cylinder centre line at one dead centre and inside at the other; but when the pin is axially out of parallel, the path of a point on its journal will remain in the true plane, as is shown in Fig. 2546, the point being taken at the intersection of E and C C. A A represents the path of rotation of the same, which is parallel to the true face B of the crank.

From the angle of the axial line of the pin being in opposite directions, when on opposite dead centres to the axial line of the crank shaft, the bore of the brasses cannot wear to suit the error, which, therefore, only diminishes by the wear of the crank pin. Suppose the error to be $\frac{1}{64}$ inch in a crank-pin journal 3 inches long, and that the connecting rod is 6 feet long, the error at the cross-head end of the rod will amount to $\frac{3}{8}$ inch.

In Fig. 2546 the error is shown to exist in an opposite direction, throwing the rod to the other side of the cross-head journal. But, in this case, the crank, when on the dead centre nearest to the engine cylinder, throws the connecting-rod end against the inside face of the cross-head journal, as denoted by the line E, which is on the opposite side of A A to what it is in Fig. 2545. Again, when

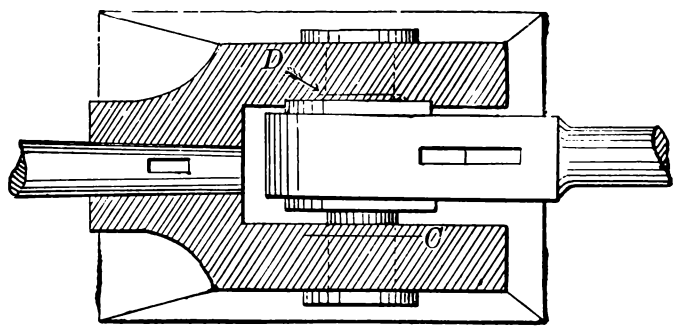

Fig. 2547.

on the other dead centre, the line F F, in Fig. 2546, falls *outside*, while F F, in Fig. 2545, falls *inside* of A A, and it is by this difference that we are enabled to know in which direction the crank pin is out of true. To find the amount to which it is out of true in the length of its journal, place the crank on one dead centre, and with the connecting-rod brasses keyed up firmly home on the crank pin, and the other end of the connecting rod entirely disconnected from the cross head, mark on the latter a line coincident with the side face of the rod end, as at D, Fig. 2547. Then, with the crank pin placed on the other dead centre, mark another line on the cross head, coincident with the other side face of the rod, at C, Fig. 2547. Now, suppose that the line D shows the rod to fall $\frac{3}{8}$ too much on that side, and line C shows it to fall (when on the other dead centre) $\frac{3}{8}$ too much on the other side of the journal, and that the length of the rod is 6 feet, while that of the crank-pin journal is 3 inches, then the latter, divided into the former, gives 24, and this sum divided into the $\frac{3}{8}$, the rod end falling out of true at C and D, Fig. 2547, gives us $\frac{1}{64}$-inch as the amount the crank pin stands out of true in its length; hence, to correct the error, we may file on the crank pin a flat place at each end, as shown in Fig. 2548 by the lines C D, and then file on the top and the bottom of the crank pin a flat place B, $\frac{1}{128}$-inch deep, and of equal depth all along the journal; by then filing the crank pin round and bringing the flat places just up to a circle, we shall have reduced the diameter of the crank pin by $\frac{1}{64}$ inch, and have made it axially true with the cross-head journal. It is important, however, to bear in mind that, in this case, the crank pin is supposed to be out of true in the direction shown in Fig. 2545, and to stand axially true with the cross-head journal, when the crank is placed at half stroke, top and bottom, the crank shaft being in proper line.

If the axial line of the cross-head journal stands truly horizontal, the flat places on the crank pin may be filed horizontally level, with the crank placed on the corresponding and respective dead centres. But as the length of the cross-head journal is so short, it is difficult to gauge, if it does stand axially exactly horizontal,

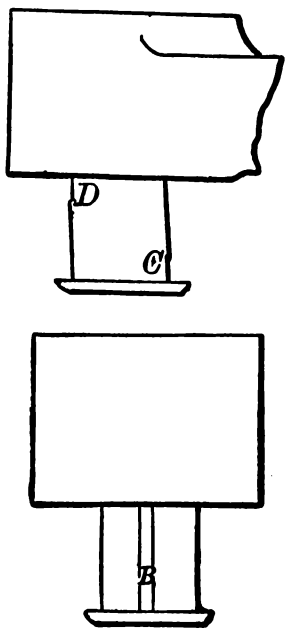

Fig. 2548.

hence it is better to try the rod, or follow the above directions; especially as the cross-head journal and crank shaft may be in line without being axially horizontal.

Suppose now that the axial line of the crank pin stands true with that of the cross-head journal when the crank is on either dead centre, but out of true when at the top and bottom half stroke.

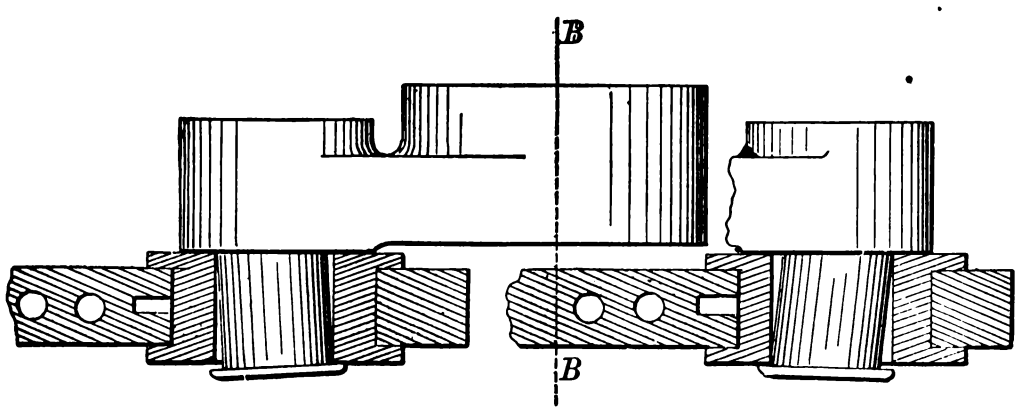

Fig. 2549.

The connecting rod, connected as before, and tried with the cross head, will fall first to one and then to the other side of the cross-head journal, and the direction in which the crank is out of true may be known from the position of the crank pin when the error shows itself.

If the error exists to an extent that is practically measurable, a pound in the journals, as well as their heating, is the inevitable result. In Fig. 2549, for example, the rod end is shown in section, and it will be noted that the error being in the direction there shown, and the crank pin in the respective positions there shown, the brass bore only contacts with the journal at each end, and that the diameter of the bore of the brasses is greater than the diameter of the crank-pin journal to *twice* the amount the crank pin is out of line. Now let us place the crank at the top of its revolution, as in Fig. 2550, and as its axial line then stands parallel to that of the cross-head journal, the brass bore is too large to fit the crank-pin journal and there is lost motion.

From the time the crank pin passes the dead centre this lost motion increases in amount until it becomes sufficiently great to slam the rod over against the side of the cross-head journal, while at the same instant the crank pin pounds in the connecting-rod brasses. At what precise part of each quarter crank revolution this action will occur, depends upon the amount the crank pin is out of line; but the more it is out the nearer to the dead centre it will be, and, conversely, the nearer true it is the nearer the crank will approach its highest and lowest positions before the pound takes place. If it is attempted to key up the brasses so as to spring the rod and let them close along the journal, the brasses will heat in proportion to the amount of error; hence when the crank pin pounds with the brass properly adjusted, and heats while keyed up enough to stop the pound, the crank pin is out of true.

To test the alignment of an engine with stretched lines take out the piston and rod, and take off the connecting rod, then fasten a piece of iron at the open end of the cylinder so that it will hold a stretched line true with the axis of the cylinder bore. Provide at the crank end of the engine bed a fixed piece of wood to hold the other end of the line, and then with a piece of wire as a gauge set this line (tightly stretched) true with the cylinder bore. Then place the crank pin at the top of its path of rotation and drop a plumb line from the centre of its journal length, and this line should, if the crank shaft is horizontally level, just meet the stretched line. If it does not do so place a spirit-level on a parallel part of the crank shaft, and if the shaft is not level it should be made so, and so adjusted that the line from the centre of the length of the crank-pin journal just meets the stretched line from the cylinder bore.

To test if the axial line of the crank shaft is at a right angle to the cylinder bore axis move the crank pin nearly to its dead centre, and measure the distance from the middle of its length to the stretched line. Then move the crank pin over to nearly the opposite dead centre, and (by means of the plumb line) measure the distance of the plumb line from the stretched line. To be correct the plumb line from the crank pin will during this movement just touch the stretched line.

To test if the stretched line is fair with the centre of the crank shaft place a square on the end of that shaft and even with its centre, and the blade should then just meet the stretched line.

The edges of the guide bars may also be tested with the stretched line, and the top and bottom of the guide-bar flanges may be tested to prove if the bars are of the correct height.

To further test the bars place a spirit-level across them and lengthwise on them.

If the piston rod and connecting rod are in place the alignment may be tested as follows: Let the piston rod be as far out of the

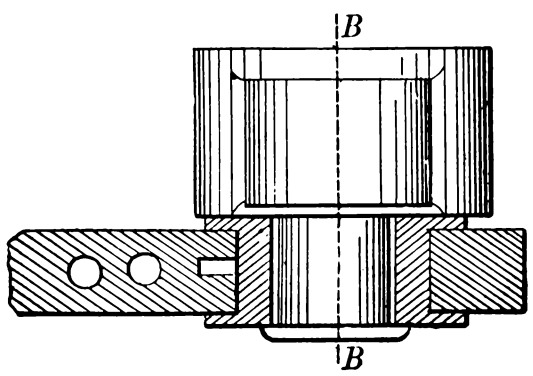

Fig. 2550.

cylinder as possible, and stretch a line to one side of it, just far enough off to clear the guide bars, &c. Set this line as follows: Let it be in line with the rod as sighted by the eye when standing some few feet away from it but horizontally level with the centre of the rod, set it parallel to the rod with a rule or its equivalent.

Then the centre of the crank-pin journal should measure from the stretched line, the distance of the line from the piston rod added to half the diameter of that rod. This test, however, is not very accurate on account of the difficulty in setting the line, and because the piston rod may not have worn equally on each side.

SETTING SLIDE-VALVES.—An engine slide-valve may be so set as to accomplish either one of three objects. First, to give equal lead for each stroke; second, to cause the live steam to be cut off and expansion to begin at an equal point in each stroke; and third, for the exhaust to begin at an equal point in each stroke.

If we set the eccentric so that the exhaust will begin at corresponding points for the two strokes, the valve lead will not be equal, and the exhaust opening will be greater when the piston is at one end of the cylinder than it will be when the piston is at the other end.

If the eccentric be set to cut off the steam at corresponding points for the two strokes, then the lead, the admission, and the exhaust of the steam at one port will differ (with relation to the piston movement) from that at the other. It is generally preferred to set the eccentric so as to give equal lead for the two ports when the piston is at the respective ends of its stroke, which gives an equal amount of exhaust opening when the piston is at the respective ends of its stroke.

The only operations properly belonging to the setting of a slide-valve are those of finding the true dead centres of the crank pin, and setting the eccentric to give the valve the desired amount of lead. It is generally found, however, that the length of the eccentric rod requires a little correction, and as this must be done before the eccentric can be set, the setting operations should be conducted with a view to making the correction as early as possible.

In many of the instructions given by various writers it is directed to first square the valve, which is to attach the parts and move the engine crank, or fly-wheel, through one revolution, to ascertain if the valve moves an equal distance on each side of the centre of the cylinder ports, correcting the length of the eccentric rod until this is the case. This is an error, because on account of the angle of the eccentric rod the valve does not, when set to have equal lead at each end of the stroke, move an equal distance on each side of the cylinder ports, but travels farther over the port nearest than it does over that farthest from the crank.

When the travel of the valve is equal to twice the width of the steam port, added to twice the amount of steam lap, the valve does not fully open the farthest port from the crank. When the valve-travel is more than this amount both ports may open fully, but the error due to the unequal valve-travel from the angularity of the eccentric rod is increased. That the amount of error induced by squaring the valve is appreciable, may be seen from the fact that with $1\frac{1}{4}$ inch steam ports, $\frac{3}{4}$ inch steam lap, and $4\frac{1}{2}$ inches of valve-travel, it amounts to about $\frac{1}{8}$ inch with an eccentric rod 4 feet long. As the eccentric rod has (if a solid one, as in the case of a locomotive) to be operated upon by the blacksmith to alter its length, and requires some accurate setting for alignment after having its length corrected, it is obviously preferable to obtain its exact length at once. This may be done with less work than by the squaring process, which is entirely superfluous.

Assuming, then, that all the parts are properly connected and oiled, the valve is set as follows: Upon the face or edge of the fly-wheel an arc, true with the centre of the wheel, should be drawn, as at A B, in Fig. 2551, marking it on opposite sides of its diameter and opposite to the crank pin P. The engine should then be moved in the opposite direction to that in which it is to run, until the guide block I is very near its full travel. A straight-edge must then be placed to bear against, or be coincident with, the end face of block I, and held firmly while a line is drawn across the edge of the guide bars, as shown at C. There should then be fastened to the floor (which must be firm, and not give under the engineer's weight), a piece of iron W, having a deep centre-punch mark, or its equivalent. A steel tram-rod T, pointed at each end, is then set in the centre-punch mark at W, and with the upper end D a line made across the wheel edge or face. The fly-wheel must then be moved so that the crank passes the dead centre, the guide block moves back and away from the line C, and then approaches it again. When the end of the guide block is again coincident with the line C, the tram should be set as before and a second line, F, marked on the fly-wheel rim, and from these two lines, D and F, the crank may be placed upon its true dead centre as follows:—

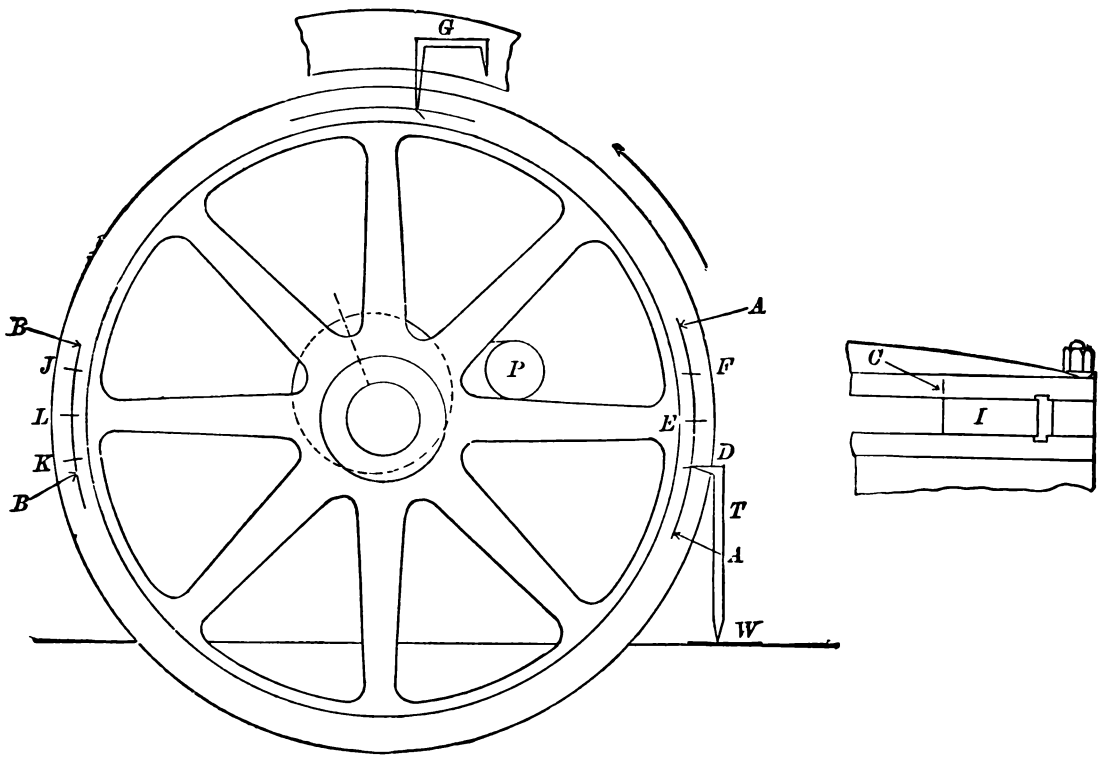

Fig. 2551.

In Fig. 2552 a section of the fly-wheel rim is shown (enlarged for clearness of illustration); from the lines D, F the centre E is found, and marked with a centre-punch dot to define it. It will be obvious, then, that if the fly-wheel be moved until this line and dot come fair with the upper edge of the tram T, the guide block will be at the exact end of its travel, and the crank, therefore, on its dead centre. By a similar operation performed with the guide block at the other end of the guide bars, and with lines on the other side of the wheel rim (as shown at B, J, K), the other centre L may be found. In obtaining these centres, however, a question arises as to the direction in which the wheel should be moved for bringing the guide block up to the lines at C, and for marking the

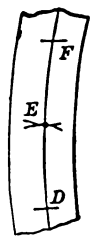

Fig. 2552.

lines D F and J K, or for bringing E or L true with the tram point. If the fly-wheel be moved in the opposite direction to that in which the engine is to run, the cross-head journal and crank pin will bear against the boxes of their brasses in the direction in which they will have contact when the engine is running. Suppose, for example, that the top of the fly-wheel when the engine is in motion moves from the cylinder, then the cross-head and crank-pin journals, driven by the piston, will bear against the half-brass nearest to the cylinder, which, *when the force-producing motion is applied to the fly-wheel instead of to the piston* will be the case when the fly-wheel is moved in the opposite direction. By moving the fly-wheel in an opposite direction to that in which the engine is to run, the lost motion in the journals and bearings is therefore taken up in the proper direction so far as the connecting-rod brasses are concerned, and any lost motion between them and their journals will not impair the set of the valve, as would be the case were the fly-wheel moved in the direction in which it is to run.

But by moving the fly-wheel backwards the play in the eccentric and in all the joints between it and the valve spindle is up in the wrong direction, because the power to move the rods is being applied in the opposite direction to that in which it will be applied when the engine is running, and, therefore, the play motion of the jointed or working parts will cause a lost motion impairing the set of the valve.

Now there are generally more working parts between the eccentric and the valve than between the crank pin and the piston, and hence more liability for lost motion to exist, and it follows that in such case it is better to move the engine in the direction in which it is to run.

It may be remarked, however, that the play may be taken up in the proper direction in both cases, and the engine be brought upon its dead centre, by moving it in the opposite direction to that in which it is to run, and that in setting the eccentrics they be moved on the shaft in the direction in which the engine is to run, as forward for the forward eccentric, and backward for the backward one (assuming the engine to have a link motion, and, therefore, two eccentrics).

It is obvious that any other resting place may be used instead of the floor for the tram; thus in a locomotive the wheel guard may be used, the tram T being used to mark lines on the upper part of the wheel rim, instead of opposite the crank. To set the valve, place the fly-wheel on its dead centre, moving the fly-wheel as directed until one of the points (E or L, say E) comes fair with the point of the tram; then move the eccentric on the shaft until the steam port is open to the required amount of lead, and fasten the eccentric to the main shaft. Next move the fly-wheel around until on the opposite dead centre, and if the lead is the same in amount for both ports the valve is set. Suppose, however, that in this last case the lead is too great; then it shows that the eccentric rod is too long,

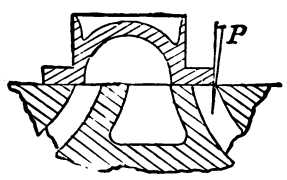

Fig. 2553.

and it must be shortened to an amount equal to half the difference in the lead. Or suppose that the lead when the wheel was tried on the last dead centre L, was less than for the other port; then the eccentric rod must be lengthened to half the amount of the difference. Assuming that the rod was too long by $\frac{1}{32}$ of an inch, then it may very often be shortened by simply heating about six inches of its length to a low red heat, and quenching it in water. If the rod has a foot which bolts on a corresponding foot on the eccentric, then to lengthen it a liner of the requisite thickness may be placed between the two feet.

Suppose there is an equal amount of lead at each end but the amount is not sufficient or is too great: then the eccentric must be moved on the shaft until the proper amount of lead appears at the port. The lead must then be again tried at the other dead centre. In moving the eccentric, however, it must, under all conditions, be moved in the direction in which it will rotate, for reasons already given. The best method of measuring the lead where the lines on a rule cannot be seen is with a lead wedge P, as shown in Fig. 2553; this, if slightly forced in, will mark itself, showing how far it entered.

In some practice the position of the valve is transferred to the valve stem outside of the stuffing box or gland, as shown in Fig. 2554, sectional view. The valve stem being disconnected from the rod or arm that drives it, the valve is moved by hand to have the proper lead, as at A; a centre-punch mark is then made outside the stuffing box and a tram B rested thereon; with the other end of the tram a mark C is made on the valve stem. A similar mark is made on the stem when the crank is on the other dead centre, and the tram and marks, applied as shown, are employed instead of measuring the lead at the ports themselves. This involves extra work, but gives no more correct results. It involves marking lines on the valve stem, which is objectionable. If several trials have to be made there is a confusion of lines on the valve stem, and the

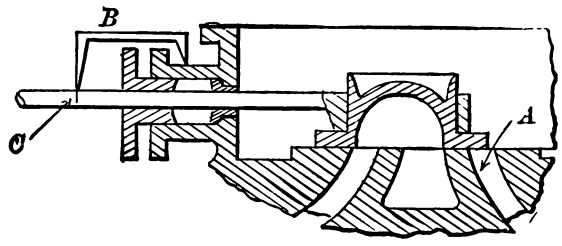

Fig. 2554.

wrong one is apt to be taken. On the other hand it affords a facility for setting the valve without having the steam chest open, which may in some cases be desirable. If this plan be adopted the lines on the valve rod should not be defined by centre-punch marks, for they will cut the packing in the stuffing box.

When the eccentrics are secured to the shaft by a set-screw only, and not by a feather, it is an excellent plan, after they are finally set, to mark their positions on the shaft, so that if they should move they may be set to these marks without moving the engine around.

For this purpose take a chisel with the cutting end ground to the form of a fiddle drill, one cutting edge being at a right angle to the other. The chisel must be held so that while one edge rests upon the axle, the other edge will bear against the radial face of the eccentric. A sharp blow with a hammer upon the chisel head will make a clean indented cut upon the axle and the eccentric, the two cuts exactly meeting in a point where the eccentric bore meets the axle circumference, so that when they coincide the eccentric is in its proper position.

If the eccentrics of a locomotive should slip when the engine is upon the road, and there are no marks whereby to readjust them, it may be done approximately as follows:—Put the reverse lever in the end notch of the forward gear, then place the crank as nearly on a dead centre as the eye will direct, and open both the cylinder cocks, then disconnect the slide-valve spindle from the rocker arm, and move the valve spindle until the opening of the port corresponding to the dead centre on which the crank stands will be shown by steam blowing through the cylinder cock, the throttle valve being opened a trifle. The position of the valve being thus determined, the eccentric must be moved upon the shaft until the valve spindle will connect with the rocker arm without being moved at all. The throttle valve should be very slightly opened, otherwise so much steam will be admitted into the cylinder that it will pass through any leak in the piston and blow through both cylinder cocks before there is time to ascertain which cock first gives exit to the steam.

Instead of finding when the crank pin is on the dead centre by means of the process shown in Fig. 2551, it may be found as in Fig. 2555, which is for a vertical engine. On the face of the crank and from the centre of the crank shaft as a centre, draw a circle B equal in diameter to the diameter of the crank pin. Then take a spirit-level C and apply it to the cylinder bore and note where its bubble stands. Then apply the spirit-level to the perimeter of the crank pin A and circle B, and move the crank until the spirit-level bubble stands in the same position as it occupies when applied to the cylinder bore. If the cylinder bore stands truly vertical the bubble will in both cases stand in the middle of the spirit tube; but in any event, the bubble must stand in the same position when

applied to the crank as when applied to the cylinder bore, in which case the crank will be on its dead centre whether the cylinder bore be horizontal, vertical, or at an angle, the dotted line E passing through the centre of the crank and the axis of the cylinder bore.

When an engine has two eccentrics, so as to enable the engine to run in either direction, as in the case of a locomotive, it is necessary to consider which eccentric is to be set for the forward, and which for the backward motion. In American locomotive practice it is usual to let the eccentric nearest to the wheel, and, therefore, the most difficult to get at, be for the backward motion, which is the least used, and therefore the least liable to get loose upon the axle.

The eccentric that connects to the top of the link is usually that

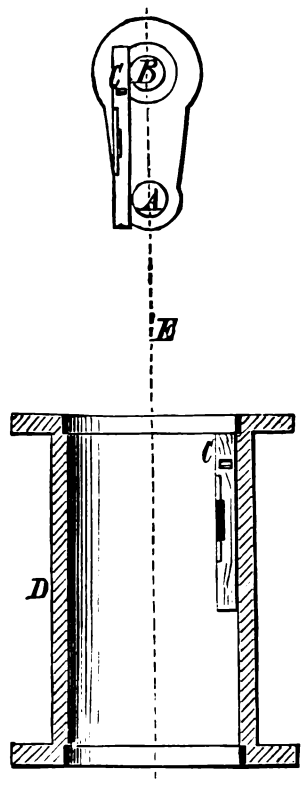

Fig. 2555.

for the forward motion, and hence that which connects with the eccentric farthest from the wheel.

In testing the lengths of the eccentric rods, work may be saved after the engine is first placed on its dead centre by putting the reverse-lever in the forward notch of the link, and adjusting the forward eccentric until the valve has the proper lead. Then set the reverse-lever in the back notch and move the backing eccentric (in both cases moving them in the direction in which they will run), until the proper amount of lead appears. The engine may then be placed on the other dead centre, and the lead both for forward and backward gear measured, so that if there are any errors both the

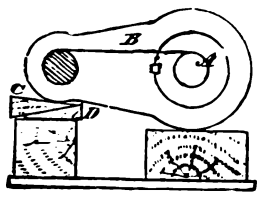

Fig. 2556.

rods may be corrected for length ; but for the final trial the crank pin must be set on its dead centre for each direction of motion separately, so as to take up any lost motion in the connecting-rod brasses.

In the case of large marine engines it is not practicable to move or rotate the engines to set the valves, and the eccentrics are therefore adjusted to their positions on the crank shaft by lines before the crank shaft is put into its place or bearings. First, the throw of the crank is set to stand horizontally true by the following method: From the centre of the crank shaft strike a circle of the diameter of the crank pin, as shown in Fig. 2556, at A, and draw upon the face of the crank a line that shall just meet the two circles as denoted by the line B, using a straight-edge, one end of which rests upon the crank pin, while the other end is coincident with the perimeter of the circle A.

By means of the wedges shown at C D adjust the crank until the line B stands horizontally level, tested by a spirit-level. A straight-edge having straight and parallel edges is set horizontally level,

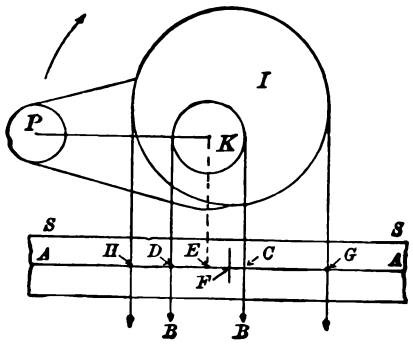

Fig. 2557.

beneath the eccentric, so that its edges will stand parallel with the throw line of the crank. On this straight-edge, and parallel to the edges, is marked the line A A, Fig. 2557. The first process is to mark on A A the centre of the crank shaft K, which is done as follows: Over K is placed the fine line B B, suspending the weights or plumb bobs at B B ; coincident with this line and across A A, are marked two lines C D ; midway between C D is marked E, which therefore stands directly beneath the shaft centre. From E the line

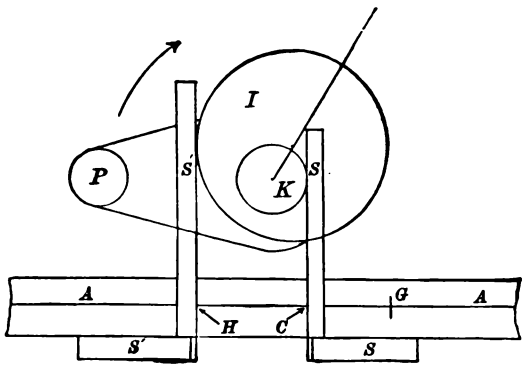

Fig. 2558.

F is drawn distant from E to the amount of lap added to the lead the valve is to have. From F as a centre two lines are drawn across A, their distance apart equalling the full diameter of the eccentric ; the plumb line is then placed over the eccentric, and the latter is rotated on the shaft until the plumb lines come exactly fair with the lines G H.

It is obvious that instead of using plumb lines a square may be

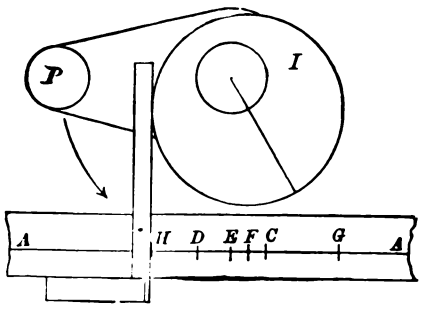

Fig. 2559.

employed to mark the lines C D, and to set the eccentric to the lines G H, the square being applied as at S and S', in Fig. 2558.

In this example it has been assumed that the direction of crank rotation was to be as denoted by the arrow ; but, suppose the crank rotation required to be in the opposite direction, then the marks on the straight-edge would require to be located precisely the same, but the position of the eccentric throw-line would require to be as in Fig. 2559, the perimeter of the eccentric being set to the lines G H

as before. The eccentric rod being supposed to connect direct to the valve spindle, without the intervention of a rock shaft, for if there is no rock shaft the eccentric leads in the direction of rotation, while if the engine has a rock shaft the eccentric follows the crank-

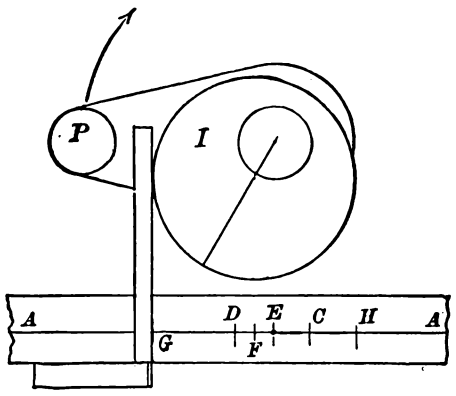

Fig. 2560.

pin in the direction of rotation, and F must be marked on the crank-pin side of E, as in Fig. 2560.

If two eccentrics are used, as in a link motion, the lines for setting one eccentric are equally applicable to both; the lap and lead line F being located on the crank-pin side of E when there is a rock shaft,

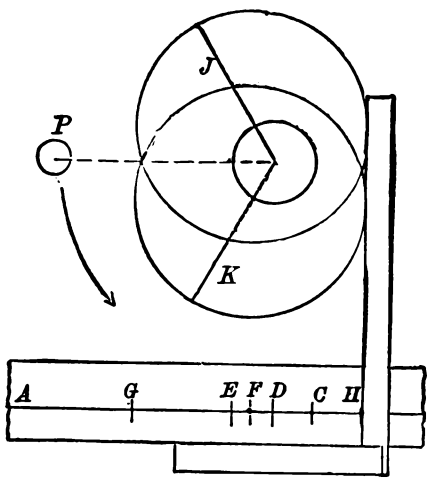

Fig. 2561.

as is supposed to be the case in Fig. 2561; and on the other side of E when there is no rock shaft; and in this case the eccentric that is to operate the valve to make the engine run forward must have its throw-line following the crank pin, as at J, in Fig. 2561; the eccentric K operating the valve for running backward. Conversely, in the absence of a rock shaft, the throw-line of the forward eccentric leads, while that of the backward eccentric follows the crank pin.

When the line of connection of the eccentric rod is not parallel to the axial line of the cylinder bore, the crank must be placed horizontally level (or if it be a vertical engine, on the dead centre), but instead of the straight-edge being placed parallel to the throw-line of the crank, it must be placed at a right angle to the line of connection of the eccentric rod.

Thus in Fig. 2562 the engine is supposed to be a vertical one, and the crank is, therefore, placed on its dead centre, its throw-line being vertical instead of horizontal as in our previous examples (which were supposed to be for a horizontal engine). It is also supposed to have a rock shaft A; hence the straight-edge is set at a right angle to the line of connection of the eccentric rod which is denoted by B.

It is obvious that to set the crank throw-line vertical the circle B

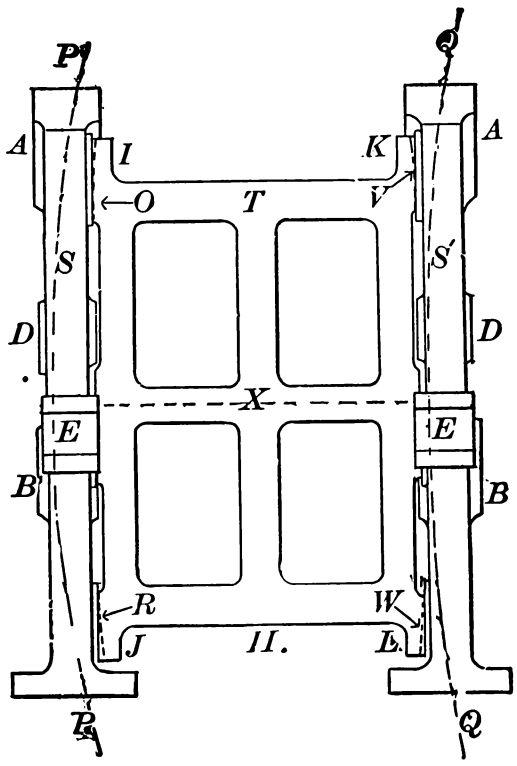

Fig. 2564.

in Fig. 2509 may be used, the spirit-level being resorted to to discover when the crank stands vertical.

An example in the erection or setting of framed work is shown in Fig. 2563, which represents a side elevation of a frame put together in four parts, two side and two end frames. A and B are journal bearings requiring to stand parallel and true one to the other, B being capable for adjustment in distance from A by means of the adjusting screws G, H. The bearings C, D, E, F, are to be parallel one to the other and to A, B. Their proper relative distances apart, and the axes of all the shafts, are to stand at a right angle to the side frames.

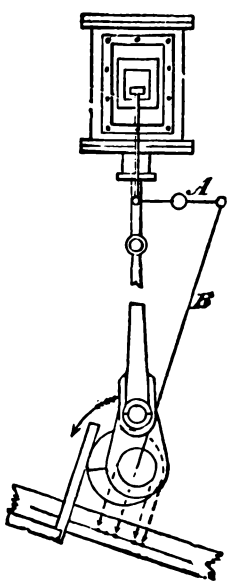

Fig. 2562.

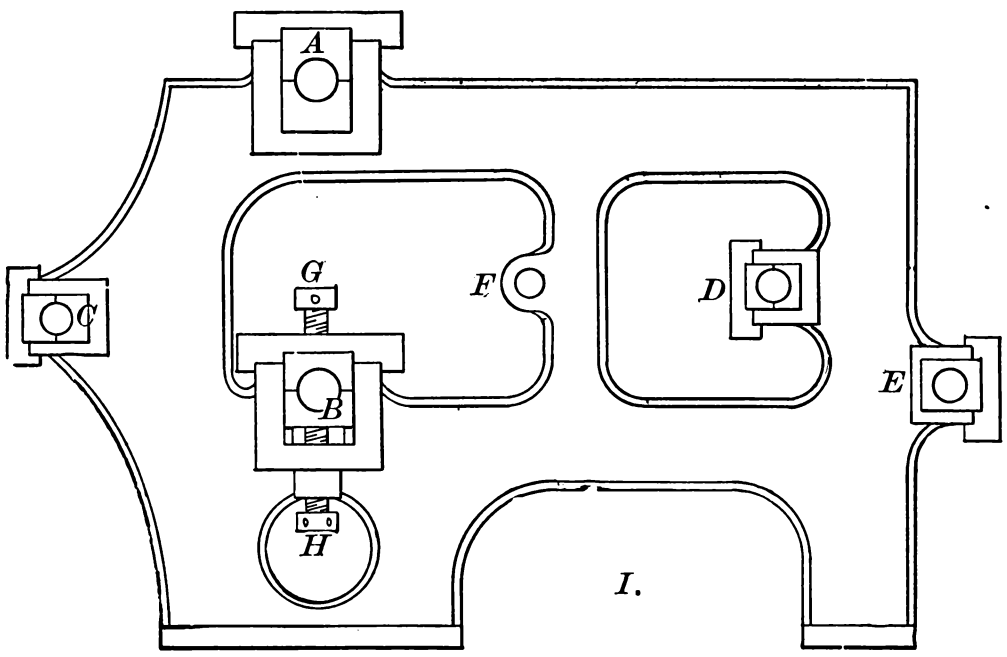

Fig. 2563.

Fig. 2564 represents an end view of the frame, the ends T being bolted to the side frames S and S' at I, J, K, and L.

Now it is obvious that the ways for the bearings A, B, C, &c., may

be trued out, ready to have the brasses fitted before the framework is put together, and that from their positions they would have to be planed out at separate chuckings ; supposing, of course, the frame to be too large to be within the capacity of the machine table. It would be difficult to cut all the surfaces of the bearing ways to stand in the same plane, unless there were some true plane to which all might be made common for parallelism.

Furthermore, unless the surfaces where T is fastened to S and S′ are properly bedded to fit each other, bolting them up would spring and bend the frames out of their normal planes. To meet these requirements, there are given to the side frames a slightly projecting surface where the feet of T meet them, and furthermore, the feet of T themselves project beyond the sides of T as shown. These projecting pieces may therefore be planed to a common plane without planing the sides of the respective frames ; and this plane should be as nearly as can be parallel with the body of each frame surface. The surfaces of the bearing ways may then be planed parallel to those of the projections, and the jaw surfaces true to the side surfaces, and all the bearing ways will stand true if the frames be properly set—when put together with the bolts. But unless the bedding surfaces at I, J, K, L, be made to bed and fit properly, the whole truth of the bearing ways and their distances apart across the framework may be altered. Thus, supposing the feet of T at I and J to meet S as denoted by the dotted lines O R, and whether the fault lie with the feet of T or with the projections on S the result will be that the pressure of the bolts holding I J to S will bend S so that its plane will be a curve as denoted by the dotted line P P, and the distances apart of the journal ways B B and D D respectively will be wrong, being too wide on account of the bend outward of S.

But the feet may touch on the opposite corners, the surfaces of S′ or of T being out of true or out of full contact, as denoted by the dotted lines V W on K,L; in this case the frame S′ would be bent to the curve Q Q, and the journal ways would be too close together.

On the other hand, the want of fit between these surfaces may be in the direction of the length of the frame instead of the direction of its height, as has been supposed ; or it may be in one direction on one foot and in another direction on another foot. But in whatever direction it does exist, it will inevitably bend and twist the frame.

It must not be taken for granted, that because these surfaces have been planed or milled, that therefore they are true ; because frames of this class cannot, if large, be held without springing them to some extent from the pressure of the bolts or other devices necessary to hold them to be cut.

It is not uncommon to plane the surfaces as true as may be, and put the frames together, bolting them up tight, and then applying the straight-edge trammel and rule to test the truth, correcting any error that may be found by inserting pieces of paper, sheet tin or material of requisite thickness on one side of the surfaces, so as to offset the error in their fit and bring the framing true ; but this is not the proper way, because it reduces the area of contact, and furthermore renders a new testing and adjustment necessary whenever the frames are taken apart It is better therefore to apply a straight-edge to the surfaces and true them to it, testing them vertically as by placing the straight-edge across K L, and longitudinally across S′, at K and the corresponding projection at the other end of the frame, filing them until they appear true.

The holes through the frame may be drilled before filing these surfaces, so as to reduce the area to be filed. Since the end frames T do not in this example carry any journals or mechanism, the position of T is not so particular as it otherwise would be ; hence, the holes in its feet may be marked off and drilled independently of the frame, the holes being drilled a little too small to allow for reaming with the holes in the frame. The framing will then be ready to put together (all machine work upon them being supposed to be done). The feet of all such frames should be planed true, so that the frame, when put together, may stand true and steady when placed upon a level floor or foundation, and in this case the distance and parallelism of the feet surfaces will be true with the ways or bearings, affording much assistance in holding the frame while putting it together. The height of the holes may be measured and marked from the feet surface, thus insuring truth as far as height is concerned. Lines may be drawn or marked on each side frame, at the proper distance from and parallel with the jaws of the ways A,B, thus completing on the side frames the marking of the location of the centres of the holes for bolting the end frames on.

If the frames were of a size to be sufficiently easily handled, the end frames might be put in their places, and the whole framework set true, so as to mark the holes in the end frames from those already drilled in the side frame. But if the use of a crane were necessary to lift them, it would be better to mark the holes on the end frames, and drill them before putting the framework together at all, leaving sufficient to ream out of the holes to bring them fair, notwithstanding any slight error in drilling them. In this case, a line denoted by the dotted line X in Fig. 2564, should be drawn across the frame, and the holes at I and J be made equidistant on each side of it, as well as the proper distance apart. X must be at a right angle to the trued foot surfaces at I J, so as to cause the side frames to stand vertical while their feet are horizontal.

Supposing now the holes to be drilled and the frames are to be bolted together, the whole frame may be held temporarily together by bolts passing through the side frames at each end, or a bolt may be passed through the holes F to steady it. Indeed, if these holes F have been accurately bored, a neatly fitting mandrel passed through them should hold the side frames true. The end frames T having been set to stand at a right angle to the side frames, and with their holes at I J, &c., as near fair as may be with the holes in the side frames, two feet, as I J, may have their holes reamed fair with the holes in the side frames, and tightly fitting bolts be driven in and screwed firmly home. Before reaming the other holes (as K L) of each end frame, the jaws to receive the bearing boxes should be tested for alignment one with the other. Truth, in this respect, being of the utmost consequence for the following reasons :

Suppose the bearing ways on one side frame to stand higher than those on the other, then, the shafts will not stand level in the frame unless (except in the case of the brasses or boxes in B) the lower brasses are made of unequal thickness through the crown, to an amount equal to that of the error. In the case of the brasses in A, C, D, E, the joint faces of all the brasses of one side frame would require to be made thinner beneath the journal than above it on the high frame, and thicker beneath than above on the low frame, This would entail much extra work in planing, marking, and boring the bearing boxes or brasses, and be an inferior job when done.

Again, the bores of all the brasses would not be parallel to the crown or bedding faces, and this error would entail the following extra work: 1. Ascertaining the amount of the error, and allowing for it in marking the brasses ; 2. The setting of the ways of the brasses out of true with the ways when clinking them for boring ; and, finally, extra fitting or filing the brass bores when fitted with the shafts in place. This extra fitting would be necessary for the following reasons :

When the surfaces of work are to be parallel, they can be measured with calipers. Surfaces to be at a right angle can be tested with a square ; those to be in line can be tried with a straight-edge, and in each case the truth or alignment of the surfaces is tested by contact of the testing tool. But in the cases where surfaces at an angle are tested or measured the tools must be set to a line or lines, and the work must be measured or cut to lines, thus : Suppose it were found that the bedding surface of the brass B was a certain amount out of alignment with the corresponding bedding surface on the other side frame, and, by measurement, this amount determined to be $\frac{1}{64}$ inch, then there is a liability to error in measureing this $\frac{1}{64}$. The brasses must be marked (for boring the same $\frac{1}{64}$ out of square, inducing another liability of error in marking that amount) ; this marking being done by lines, there is a liability to error in setting the work to the lines. From these liabilities to error, it is generally found that work not true in alignment requires, when it comes to be put together, to have each piece fitted to its place and corrected for alignment.

But, suppose the ways are made true and in proper alignment, then the brass bores are simply made of equal thickness at the crown, and on the sides at a right angle to the inside faces of the ways ; and truth, in these respects, may be measured by actual contact, with the square or calipers, eliminating the chance of error.

In repairing the machine, or putting in new bearings or brasses ;

the measurement and transferring of the error in the ways to the brasses has all to be gone through with again, and the parts fitted for alignment; whereas, if the ways are true, the brasses can be made true, and to go together, with but little, if any, adjustment when tried in their places.

The most accurate method of testing the adjustment of the ways is as follows: Fig. 2565 represents a plan view of the frame; N represents a straight-edge applied to the surfaces of the jaws *a b*. The method of applying this straight-edge is to place one end across a jaw, as *a*, while the other end is elevated above *b*; then, while pressing the end firmly against *a*, lower the other end to the face of *b*; if its edge at that end falls fair with *b*, so as just to touch it, the process may be reversed—one end being pressed to *b*, and the other lowered upon *a*. By this means, it will not only be discovered

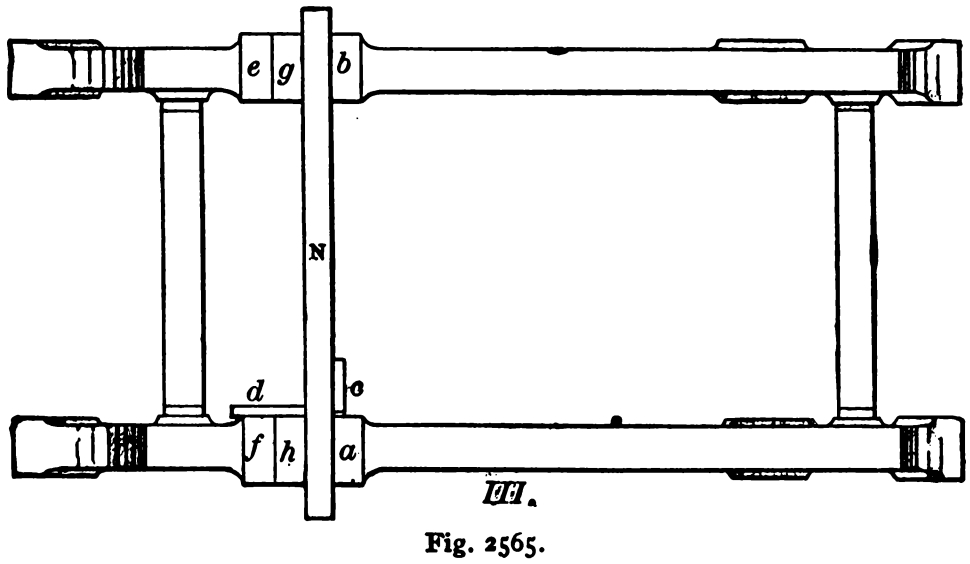

Fig. 2565.

whether the jaws *a* and *b* stand square across the frame, but also whether the frame on either side is sprung. A square *c* may also be rested against N, and its blade *d* tested with the side face of the way, as shown. The same process of testing should be applied to the other jaw faces *e*, *f*.

Suppose, however, that the width between the jaws *a*, *f* was less than that between *e*, *b*, then the straight-edge, when pressed to *a*, would show a space between its edge and *b*; and also a space between its edge and *e*, when its other end was pressed to *f*; and, when these spaces were equal in amount, the frames would be set true in one direction. To test the truth in the other direction, the straight-edge should be applied after the same manner to the bottom surfaces *g*, *h*.

It will not answer to rest the straight-edge against the two surfaces and observe their coincidence with its edge, because any error cannot be sufficiently, readily, or accurately tested by this means. Nor will it answer to test by the bearing marks of a straight-edge applied with marking, unless the coat of marking be very fine and the straight-edge be moved without any vertical pressure on it; because, under such pressure, the straight-edge will bend.

The ways for all the bearings should be tested in this manner; so

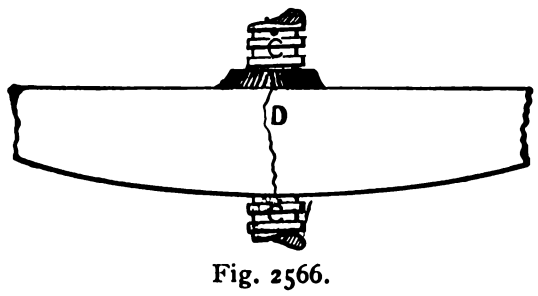

Fig. 2566.

that, if from any error in the machine work, some of them will not come fair, the frames may be set to align those that it is of most importance to align truly; or if there is no choice in this respect, then those carrying the largest bearing should be set true; because, if it be decided to correct the error on the other bearing or bearings, there will be less area to file or operate upon. The setting being complete the holes may be reamed and the remaining bolts put in, the testing being repeated after the frame is finally bolted together. If this final test shows that bolting the frame up has altered the alignment by springing the frame, the bolts in one foot, as say I, Fig. 2564, may be slackened and the test repeated; and, if the frame is then found true, it is the bolting at I that causes the spring, on account of the bedding surfaces not fitting properly. If I is not found to be at fault, it may be bolted up again and J tested by loosening its bolts, and so on, until the location of the error is detected. Furthermore, when the frame is bolted up, the width of the bearings, as from *a* to *b*, should be tested; for in a job of this kind, it will pay to have the framework so true to the drawing that, if the other parts, as the shafts, bearing parts, &c., be also made to the drawings, the parts will go together, thus avoiding the necessity of varying all the other parts from the drawing to accommodate errors in the framework.

Among the jobs that the erector is often called upon to perform is that of patching or repairing pieces that have cracked or broken. Fig. 2566 represents a case of this kind, the fracture being at D. The principle to be observed in work of this kind is to cause the bolts to force the fractured pieces together, so that the irregularity or crookedness of the crack, as at D in the figure, may serve to lock the pieces together.

Suppose, for example, we were to put on a patch P, Fig. 2567, and there would be but little to prevent the crack from opening under severe strain, and the patch would stretch, permitting the

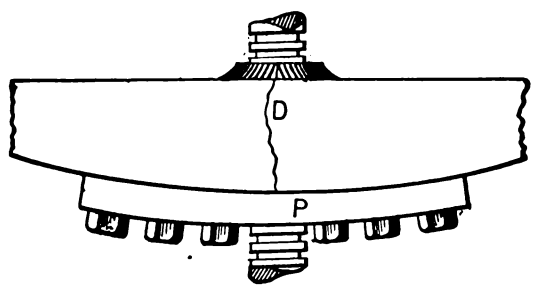

Fig. 2567.

crack to open and finally causing the bolts to break or sheer off. A preferable plan, therefore, is to put two patches on the sides in the following manner:—

The holes should be drilled through the beam and the plates held against the beam so that their holes may be marked by a scriber passed through the holes in the beam. The holes in the plates should be drilled closer together than those in the beam, so that when driven in they will serve as keys to close the two sides of the crack together, as shown in Fig. 2568, where it is seen that one side of the bolt bears against the holes in the patch and the other against the holes in the beam. To facilitate getting the bolts in place the plates may be heated so as to expand them.

In cases in which it would not be permissible to drill so many holes through the beam on account of weakening it, we may use patch bolts with countersunk heads, as in Fig. 2569. Two only of the bolts pass entirely through, and it is best to let them be taper, as at A in the figure, the head not meeting the patch. The hole in the beam, after being reamed taper, should be filed out on the side B, and that in the patch plates on the other side, as at C and D, so that the bolts will serve as keys. After these two bolts are in place

and their nuts firmly screwed home, the holes for the patch bolts may be drilled through the plates and into the beam. When the countersunk head bolts are fitted they should be turned down behind the head, so as to leave a part weaker than the bolt, and then screwed in until the required end breaks off. The taper bolts should be of steel, but those with countersunk heads may be of iron.

ERECTING AN IRON PLANER.—If an iron planer be properly fitted and erected, the table will be quite solid in the V-ways in the bed, and will not rock or move even though a heavy vertical cut be taken at the extreme sides of the table, but any error of truth of alignment or fit either in the bed-ways or the table V's will cause the table to lie improperly in the V's and to be apt to rock as it traverses. The author has had planed upon a planer thirty years old, at the Freeland Tool Works, in New York City, a cast-iron surface 12 × 20 inches, the metal weighing about 60 lbs.,

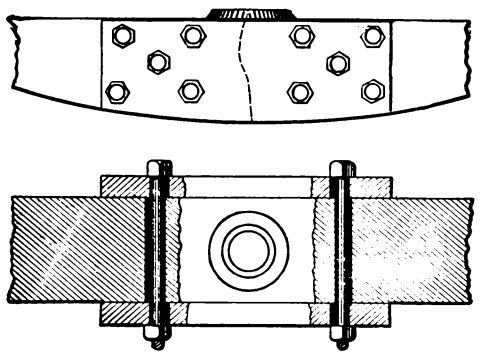

Fig. 2568.

and the surfaces were so truly planed that one would lift the other by reason of a partial vacuum between the two. These planed surfaces were exhibited by the author at the American Institute Exhibition in 1877, and were awarded a medal of superiority.

The manner in which this planer was fitted and erected, and the principles involved in such fitting and erecting, are as follows:

While it is essential that the foot or resting surface of a planer bed (whether it stands on legs or rests direct upon its foundation) be as true as it is practicable to plane it, still it is more essential that the V's or ways be true, and as the casting will be apt to alter its form from having the surface metal removed, it is best to plane the side on which the ways are, the last.

When the bed is placed upon the machine to have its resting surface planed, the casting being uneven, it will be necessary to place packing pieces of suitable thickness beneath the places

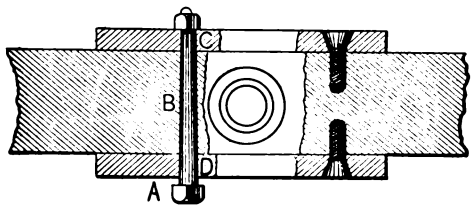

Fig. 2569.

where the clamping plates hold it, so that the pressure of those plates may not spring or bend the casting.

These packing pieces require to fill up solidly (without lifting the bed) the hollow places, and it is a good plan to place among them a piece of strong writing paper for reasons which will appear presently.

In planing the bed all the surfaces should be roughed out before any are finished. Before any finishing cuts are taken all the clamping bolts should be loosened and the pieces of paper tried by pulling them, so that if the casting has altered its form it will be made apparent by some one of the pieces of paper becoming loose.

In this case the packing must be readjusted, clamping both as lightly as will hold the work, and all as equally as possible, when the finishing cuts may be taken.

The best form of template to plane the ways to is that shown in Fig. 2570, in which B is a side and A an end view. A corresponding female template being shown at D to be used in planing the table V's.

The length C of the V of the template must not be longer than from 4 to 6 inches, or it will be liable to spring or twist from its own weight. This template is not intended to be used in any sense as a straight-edge to test the truth of the length of the ways, but rather as one to test their width apart, and the correctness of the angles. The top surface A B should be quite true with the V's, being equidistant from them, so that by testing that surface with a spirit-level it may be known whether the ways are level either crosswise or lengthwise.

The V's of the template require to have red marking on them so as to mark the ways when the template is moved, and show that the ways accurately fit to the template, which is highly important.

In planing the table or platen it is essential to bear in mind that the area to be planed on the V side is always small in comparison with that to be planed on the other or work-holding side of the table, and as the planing of this latter surface is sure to cause the casting to alter its form, it is necessary to plane it first, so that the alteration of form may occur before and not after the V's have been planed.

In chucking the table to plane its work-holding surface, the packing pieces must be used as described for the bed, and the bolts placed as there described.

Both bed and table being planed they require to be fitted together (no matter how expertly the planing has been done) if a really first-class job is to be made of them. In doing this it is essential that the bed be supported at the same points as it will be when the machine is put to work, for in large or long casting the deflection or bending from its own weight is sufficient to have an important practical effect. The same fact will also apply to

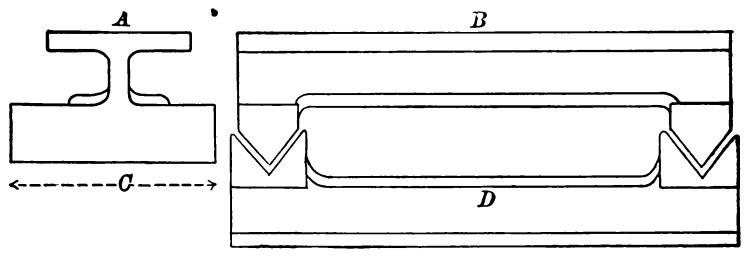

Fig. 2570.

the table and even to the cross slide, even though the latter be heavily ribbed and but, say, 5 feet long.

If, therefore, the bed is to be supported by legs, its guideways or V's should be fitted after the legs are attached. The bed must be carefully levelled so that the ways may stand horizontally true, which may be tested by placing the template A B in Fig. 2570 in place and applying a spirit-level first across and then lengthwise of the upper surface of the template.

If the bed rests upon a foundation at several points in its length it should be rested at those points while being fitted and carefully levelled as before, the template and spirit-level being tried at every two or three feet of the bed length.

To test the width of the V's and their widths apart in the fitting, the template A B, Fig. 2570, must be used in connection with red marking, but to true the lengths of the ways a surface plate about 4 feet long and slightly wider than the width of one side of the ways must be used, and if the template and the surface plate show the ways true they will be of the correct width, of correct angle and true planes. But this does not insure that the two ways are in line one with the other, and for this purpose separate test blocks are necessary, because the template is too narrow in width to give a good test, and cannot be made wider, because in that case its own weight would cause it to spring or deflect to suit any error in the work.

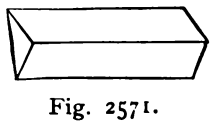

Fig. 2571.

These test blocks are simply two pieces of metal, such as shown in Fig. 2571. The lengths of these blocks should be about 8 inches, and the best way to obtain them true and exactly alike is to make one block and then cut it into two. They possess an advantage

not possessed by a template that spans both ways, inasmuch as they may be turned end for end in each way and thus test the accuracy of the angles of each way.

Again, both may be placed in one way, and by various applications in connection with straight-edge, surface plate, and level they will test the truth of the ways, both individually and one with the other in a better manner than by any other method.

Fig. 2572 represents the various positions of the **V** blocks for the testing, A, B, C, D, E, F, G, H, representing the blocks; straight-edges may be placed as at I, at J, and at K, and if the ways are true the straight-edge, lightly coated with marking, should have contact clear across the upper surface of both **V**-blocks, and a spirit-level placed on the straight-edge (in each position of the same) should show them to be level.

The surface P, on which uprights or standards on that side of the plane, rest, being planed with the **V**-ways will be true with them, and the uprights may be erected thereon, their base surfaces being fitted to P until the standards stand truly vertical and parallel in their widths apart. In testing these uprights they should be bolted home as firmly as they will be when finally erected, as they will be liable to alter their set if bolted up more firmly than when tested. These front surfaces should be at a right angle to the length of the bed **V**-ways, and this may be tested by placing a straight-edge across their surfaces and testing it with a square rested against the edge of the planer table.

The method of erecting planers at the Pratt and Whitney Company's shops is as follows:—

To test the **V** s, a plate P, Fig. 2573, is applied as shown, its lugs a,a^1 fitting to corresponding sides of the two **V** s, as B, B. In Fig. 2573 the test is made by inserting thin pieces of tissue paper between a,a^1 and the **V**-sides, the friction with which the paper is held showing the nature of the fit. Thus, if the paper will move easily at one end and is tight at the other end of either of the lugs a,a^1 the fit is shown to be defective. When the fit on these sides is corrected, the plate P is turned around, as in Fig. 2574, and from a similar tissue-paper test, the other sides are corrected. Thus the outside angles of the two **V** s are fitted to the same angle; inside angles are also fitted to the same angle. But it will be observed that it does not follow that the inside angles of the **V** s are of the same degree of angle as are the outside halves or angles, unless the two lugs a,a^1 of the plate P have equal angles. It is on this account that the test is made by tissue paper, rather than by the bearing marks produced by rubbing P along the **V** s, since that might in time wear the angles a,a^1 out of true. The same plate P may be used to true the male **V** s on the work-holding table of the machine, as is shown in Figs. 2575 and 2576, where the table is seen upside down, as is necessary in order to apply the plate. Here, again, the outside angles or halves of the **V** s are fitted from the same **V** (a^1) of the plate, so that the fit of the table will be true to the bed, even though the angle on one side of the **V**-ways were not precisely correct, and there is less liability to error than would be the case were a male and female plate used instead of a single plate. The alignment next in importance is that of the uprights, standards, or side frames of a planing machine, and to enable the correct erection of these, the device A, Fig. 2577, is employed. It consists of a solid plate fitting into the **V**-ways of the planer-bed and having two steps, B and C, which receive the side frames to be erected. The width D is the width apart of the side frames, and the side surfaces of the steps (as G) are vertical to the centre line of the **V**-ways of the bed, so that the side frames may be rested against G on one side, and the corresponding surface on the other step. The surfaces E, F are at a right angle to the **V**-ways of the bed, so that when the side frames are against E, F they will be set square across the machine. The top face of the plate A is planed parallel to the **V** s of the plate, so that in addition to resting each side frame against the surfaces (as F G) a square may be rested on plate A and applied to their trued surfaces, and thus may these side frames be set true and square, both one with the other, and with the ways in the bed, without the use of stretched lines and straight-edges, which secures greater accuracy and saves considerable labor.

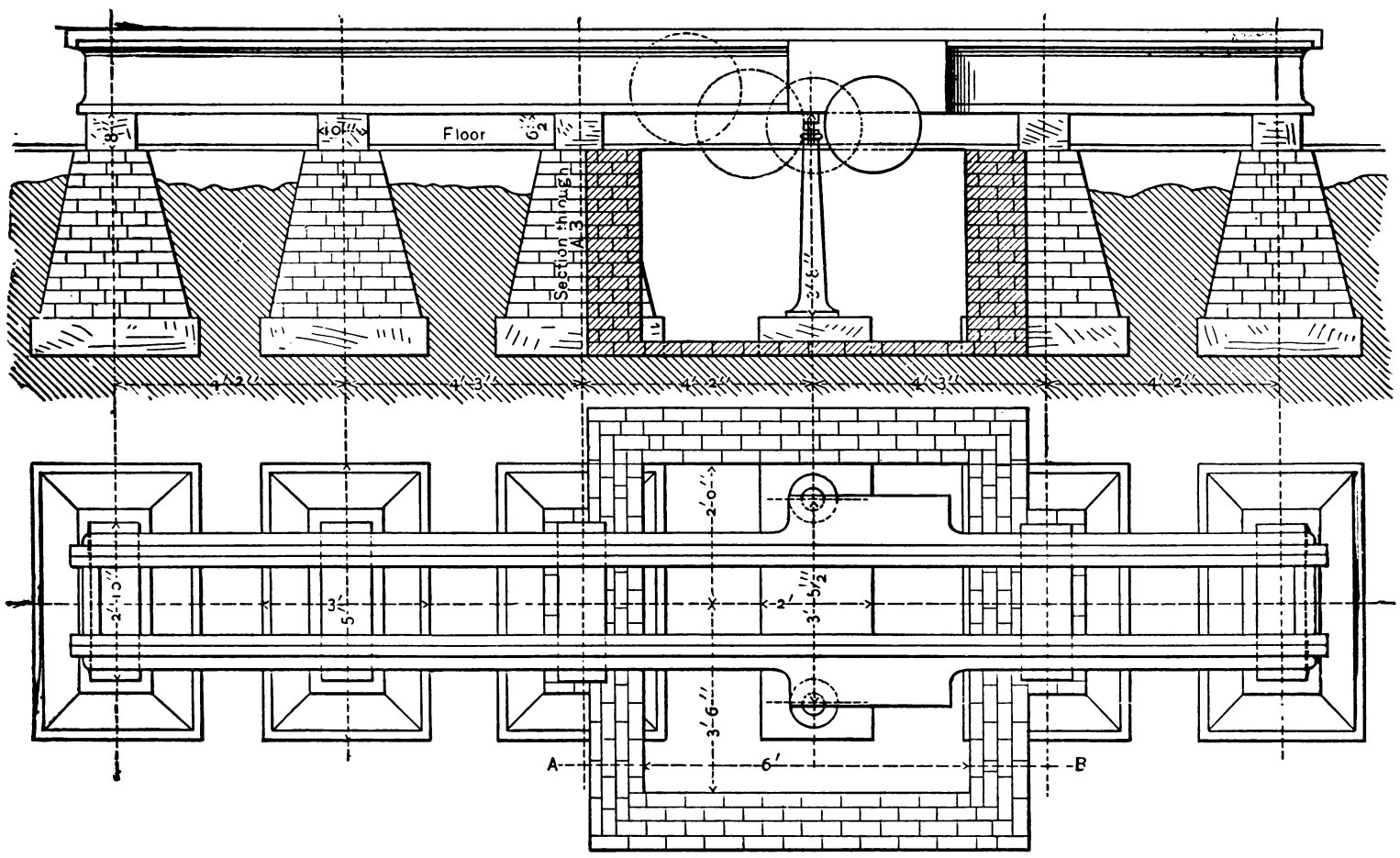

Fig. 2578.

All the smaller parts of the machine may then be erected true to the bed or the side frames, as may be required, and if it be a small planer, in which the bed rests upon feet, all that will be necessary in setting the machine in position to work is to set the surface of the work-table level. But in the case of a large heavy planer a solid foundation must be built for the bed, because it will spring, bend, and deflect from its own weight, and thus the side frames, as well as the bed, may be thrown out of true and alignment. Fig. 2578 is a side and plan view of the foundations for a planer, showing the bed-plate in position upon the same.

The stone blocks forming the base of the foundation require themselves to rest upon a solid base, and not upon a soil or gravel

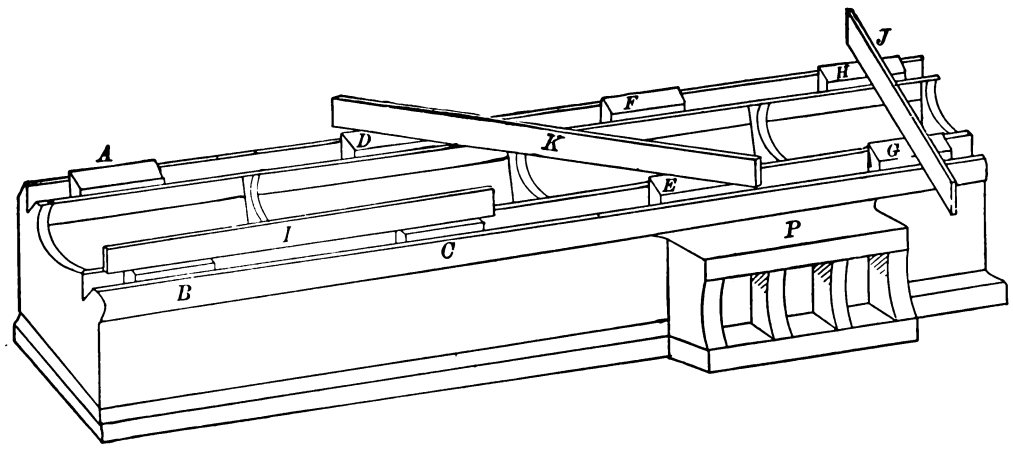

Fig. 2572.

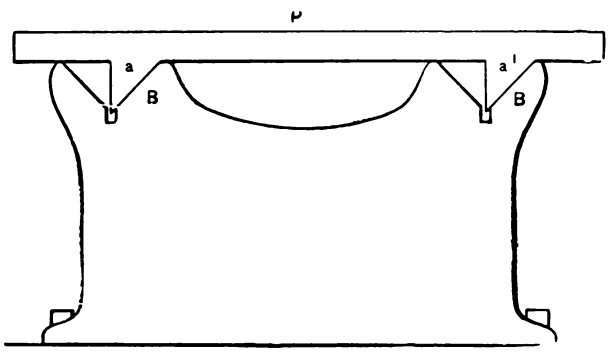

Fig. 2573.

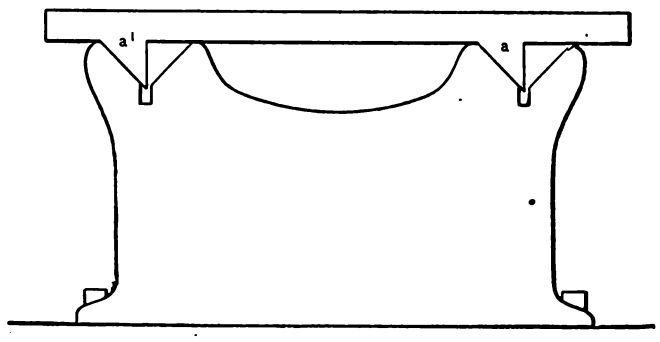

Fig. 2574.

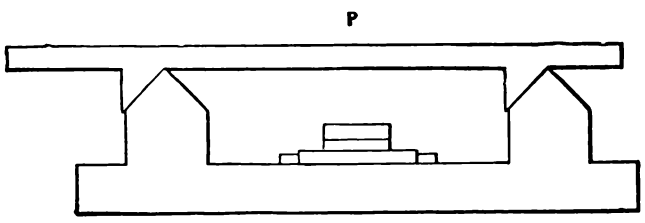

Fig. 2575.

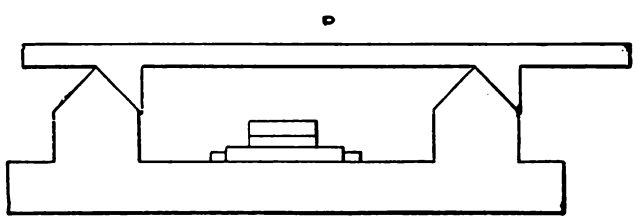

Fig. 2576.

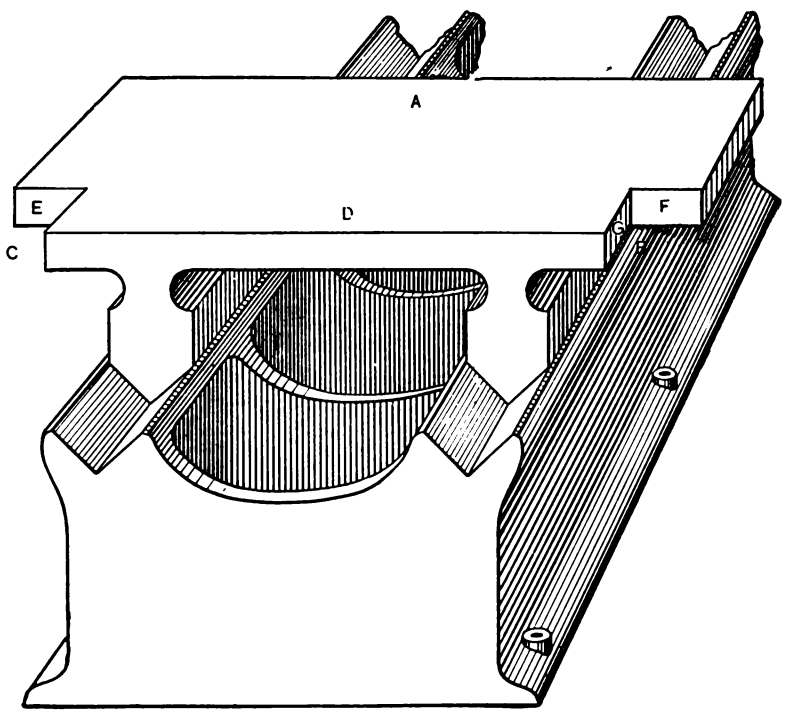

Fig. 2577.

that is liable to sink beneath them. The brickwork above them is best laid in cement, which should be properly set before the planer bed is placed in position. Near the centre of the bed, and directly beneath the cross-slide, is shown a screw jack, to take up any sag of the bed, and cause the V s to have a good bearing directly beneath the cutting tool, which is essential to prevent the table from springing from the pressure of the tool cut.

FITTING UP AND ERECTING A LATHE.—The first operation will be to true the bed or shears. If the lathe has raised V s on the bed it will be sufficient to true them only, without truing the flat surfaces. The bed should during the fitting be supported at the same points as it will be when in use.

The method of aligning the lathe heads at the Pratt and Whitney Company's workshops is as follows: Fig. 2579 is a side and an end view of a part of a lathe shears A, with the third as far from the second as will permit the insertion on the bar and between them of a pulley to drive the bar, which must be splined to receive a feather in the pulley, so that the bar may be fed through its bearings and through the pulley to the cut. After the live head has been bored the tailstock or back-head may be bored from the other end of the bar, so that the standards will not require to be moved on the bed until the boring is completed. The bar may be fed by hand, or an automatic feed motion may be affixed to one of the standards. The heads being secured to the bed while being bored, there is no liability of error in their alignment, because, even if the holding bolts spring the heads in clamping them to the bed, the holes will be true when the heads are firmly home upon the bed, as they will be when in use, whereas under this condition such will not be the case if the holes for the spindles are bored before the seats are planed and fitted.

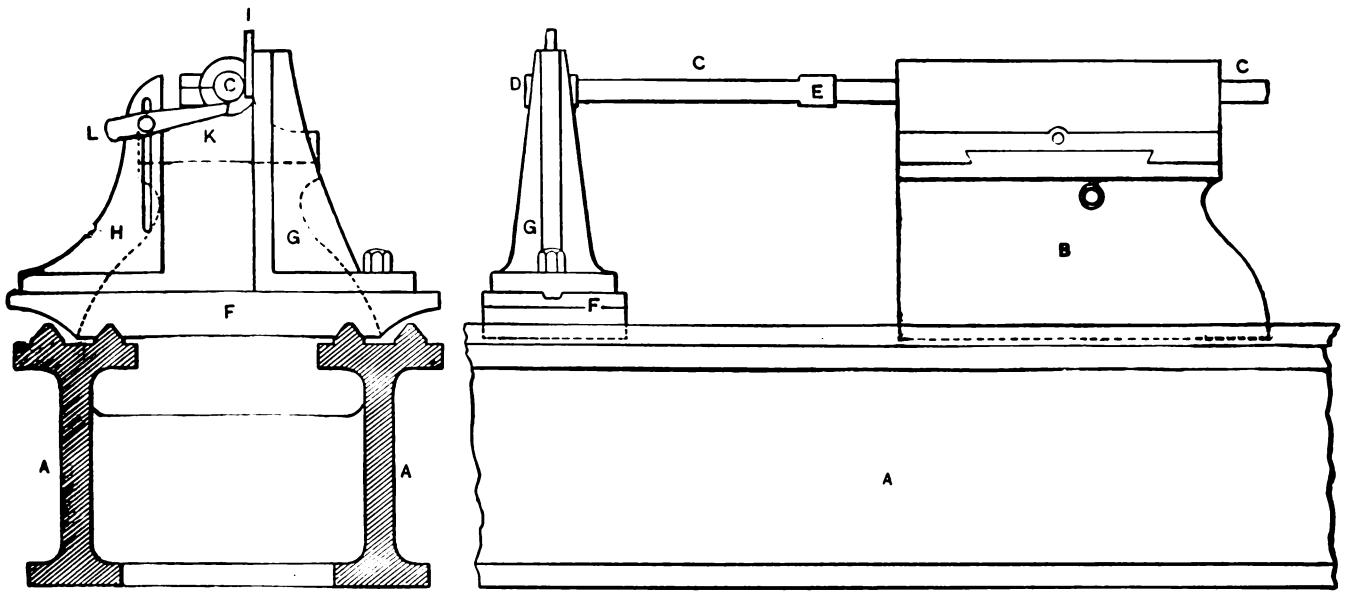

Fig. 2579.

the tailstock B thereon. To the bore of the tailstock there is closely fitted an arbor C, accurately turned in the lathe, and having at the end D and at E two short sections of enlarged diameter. A plate F is fitted to the inside V s of the shears (upon which V s the tailstock sits). This plate carries a stand G, and a second gauge or stand H. Stand G fits at its foot into a V provided in F, as shown, the object of which is to so hold G to F that its (G's) face will stand parallel to arbor C. The stand is so adjusted that a piece I may be placed between C and G and just have contact with both, and it is obvious that if this is found to be the case with the tailstock and the stand placed at any position along the bed, the arbor C, and, therefore, the bore of the tailstock, must be true, sideways, to the inside V s of the lathe shears. The testing, however, is made at the enlarged sections D and E, G of course being firmly bolted to F. To test the height of the arbor C from the V s, and the parallelism in that direction, stand H is provided. It carries a pointer or feeler K, whose end is adjusted to just touch the enlarged sections D and E of C, it being obvious that when the degree of contact is equal at these two sections, with the tailstock and the plate F moved to various positions along the bed, the adjustment or alignment in that direction is also correct. The adjustment and corrections may then be made with the headstock of the lathe in place of the tailstock, the arbor fitting into the bored boxes of the lathe and extending from it, and having two sections of the same diameter, as sections E in the figure. Now, suppose that in the test thus made the bar C proves to stand true in some locations, but not in others, upon the bed; then it is proof that it is the V s that require correction, while the tailstock is in error in all cases in which the error is constant, with the tailblock moved in various positions along the shears.

In some practice the heads are bored after being fitted to the ways, and in this case the boring bar may be supported by standards fitting to the lathe bed, running in bearings, and not on centres. There should be three of these bearings, one at one end of the head, and as close to it as convenient, another at the other end, as close as will permit the insertion of the cutters, and

The feed screw must be placed quite parallel to the V s or guides of the bed, or otherwise the pitches of threads cut in the lathe will be finer than they should be, and the screw will bind in the feed nut, causing undue wear to both.

The method employed to test the truth of lathe shears and heads in the David W. Pond Works, at Worcester, Massachusetts, is as follows:—

The planing, both of the lathe shears and of the heads, being done as accurately as possible, the heads are provided with a

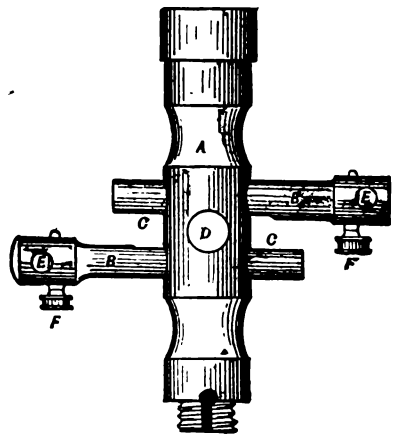

Fig. 2580.

mandrel or arbor, to the end of which is secured the device shown in Fig. 2580, in which A is a hollow cylindrical piece having a threaded and split end, so that by means of a nut the bore may be closed to tightly fit the arbor referred to; B, B are two arms, a sliding fit in A, to enable their adjustment for the width of lathe V s, and having a flat place on one side, as at C C, to receive the pressure of a locking device D, by means of which B, B may be fastened in their adjusted positions; E, E are cylindrical arms, a sliding fit in B, B, also having flat sides, and capable

of being secured in their adjusted positions by means of locking devices F, F.

Fig. 2581 is an end view of the device in position on a lathe tail stock, and Fig. 2582 is an enlarged view (being half full size) of the devices at the lower end of arms or rods E, E.

At the lower ends of E, E are provided two pieces G G, which are capable of adjustment to fit the V s H, H of the lathe, as follows :—

The middle pins I are fast in the arms J, but are pivoted in G, the end pins, as K, are pivoted in G, are flat where they pass

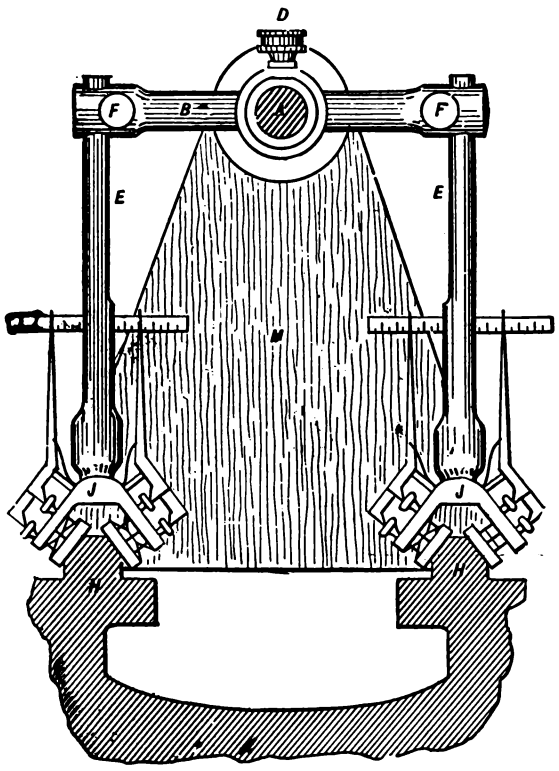

Fig. 2581.

through J, and threaded to receive the nuts, L, of which there are four, two to each piece G. By operating these nuts, G may be adjusted to bed fair on the angles on the lathe Vs H. At M are two fixed pins which afford a fulcrum, at N and O respectively, to four index needle arms. Two of these index arms only are seen in the cut, marked respectively P and Q, which are pivoted at N. Two similar pointer or needle arms are on the other side of M, being behind P and Q, these two being pivoted respectively at O. At the lower end of P is a point resting in the centre of the nut, and similarly the end of Q rests in the centre of the nut on that side. Similarly the two needles not seen have pointed ends resting in the centre of the nuts marked respectively L. Between G and J are two springs placed back to back, which act to hold G away from J. But it will be seen that if either end of G be forced towards J, as by passing over a projection on the V H, then the pin K, will push nut L, and this will raise the end of the pointer or needle to a corresponding degree, and the pointer being pivoted (as at N), its upper end will move and denote on the graduated index R that there is an error in the lathe V, the amount of the error being shown multiplied on account of the leverage of the needle arms from the pivots.

The pieces G being adjusted to bed fairly on the lathe Vs, the heads of the lathe are moved along the lathe shears, and if the Vs are true to angle the upper ends of the needles will remain stationary, a projecting part of a V will, however, cause the needle point to move toward E, while a depression on a V would cause the springs K to move G in, keeping it in contact with the V, while the needle point would move away from E. To maintain the needle arms in contact with the nut heads L, springs S are employed. Variations in the widths apart of the Vs on either side of the shears would obviously be shown in the same manner, the defect being located by the needle movement. The corrections are made from the contact marks of the heads, caused by moving the heads along the Vs and by careful scraping.

Notwithstanding that every care and attention may be taken to make a lathe true in the process of manufacture, yet when the whole of the parts are assembled it is found essential to test the truth of the finished lathe, because, by the multiplication of minute errors the alignment of the lathe, as a whole, may be found to need correction. A special inspector is therefore employed to test finished machines before they leave the works, and in Fig. 2583 is represented the device employed for testing the alignment of the line of centres of lathes.

Upon the face of the face plate and near its perimeter there are turned up two steps, as denoted by B and C. The tail-spindle is provided with a stud S, which fits in the place of the dead centre, and carries what may be termed a double socket, one-half of which (as F) envelops the stud S, while the other half (A) envelops and carries a rod R. These two halves are in reality split sleeves, with set screws to close them and adjust the fit. By means of the screws E, the sleeve F may be made a tight working fit upon S, while, by means of screws G, sleeve A may be made to firmly grip the rod R, which may thus be securely held while still capable of being swung upon stud S. Upon the outer end of the rod R is another sleeve I, which is also split and secured to the rod R by means of screws corresponding to those shown at G. It also

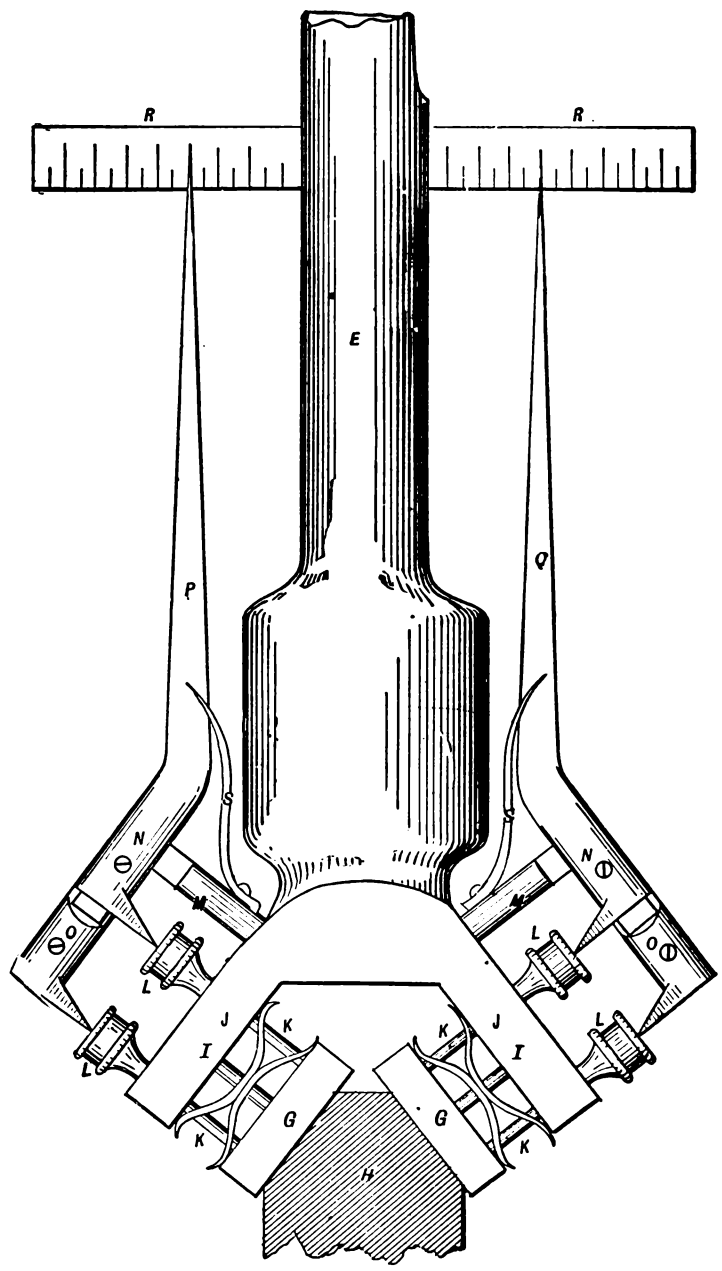

Fig. 2582.

carries a pin, upon which a disk K is pivoted, and a lug through which the adjusting screw V is threaded. Upon K is a lug which has on one side of it the end of a spring T, and it is obvious that by operating V the disk K will be rotated upon its central pin. K carries two lugs, L and M, the latter being threaded and split. These two lugs receive a sleeve N, threaded into M, and a close plain fit in L. The small end of this sleeve is split and is threaded slightly taper, and is provided with the nut P. Through this sleeve passes a needle Q Q, one end of which is bent as shown, and it is obvious that by screwing nut P upon N the sleeve will be closed and will tightly grip the needle Q Q. Now, suppose that the head of N is operated, and it will move endwise through L and

M, carrying with it the needle Q Q, which will remain firmly clasped in the sleeve; or suppose that screw V is operated, and K will revolve, carrying with it the needle Q Q, which will still remain firmly gripped, and it follows that there is thus obtained a simple means of adjusting the needle without releasing it.

The application of the instrument is as follows: To test if the head and tailstocks are of equal height from the bed, the instrument is set and adjusted exactly as shown in the engraving, the needle being adjusted to just touch the diameter of the step at B. The rod R is then swung around so that the needle comes opposite to the same step B at the bottom of the face plate, and if the needle just touches there also the adjustment for tailstock height is correct. Similarly for testing if the tailstock is set true sideways the needle may be tried in the same manner and upon the same step, but upon the two opposite sides of the face plate, instead of at the top and bottom. It now remains to test if the tailstock is in line in a horizontal direction with the live spindle, and this is done by reversing the needle end for end in the sleeve N, and setting it to just touch the face C of the turned step on the face plate, and if it just touches at the top and bottom as well as at the two sides the tail-spindle is obviously in line. It may be observed, however, that if an error in any one direction is found, it is necessary to go through the whole series of tests in order to precisely locate the error. Suppose, for example, that the needle, being adjusted as in the engraving to just touch the step at B, does not touch it when tried at the bottom of the plate, then the error may be caused in three ways—thus, in the first place, the whole tailstock may be lower than the headstock; in the second place, the front end of the tailstock may be too low; or, in the third place, the back end of the tailstock may be too high. If the first was the cause, the test with the needle point tried with face C would show correct. If the second or third was the cause of the error, the needle point when tried to face C would touch when applied at the top, but would not touch when tried at the bottom of the face plate. Another case may be cited. For example, suppose the needle applied as shown touched at the bottom but not at the top of the step B, then the test with the needle reversed would show whether the whole tailstock was too high, or whether the front end only was too high, or the back end too low. There is one excellent feature in this device to which attention may be called, which is that the tests are made on as large a diameter of face plate as possible, which shows the errors magnified as much as possible.

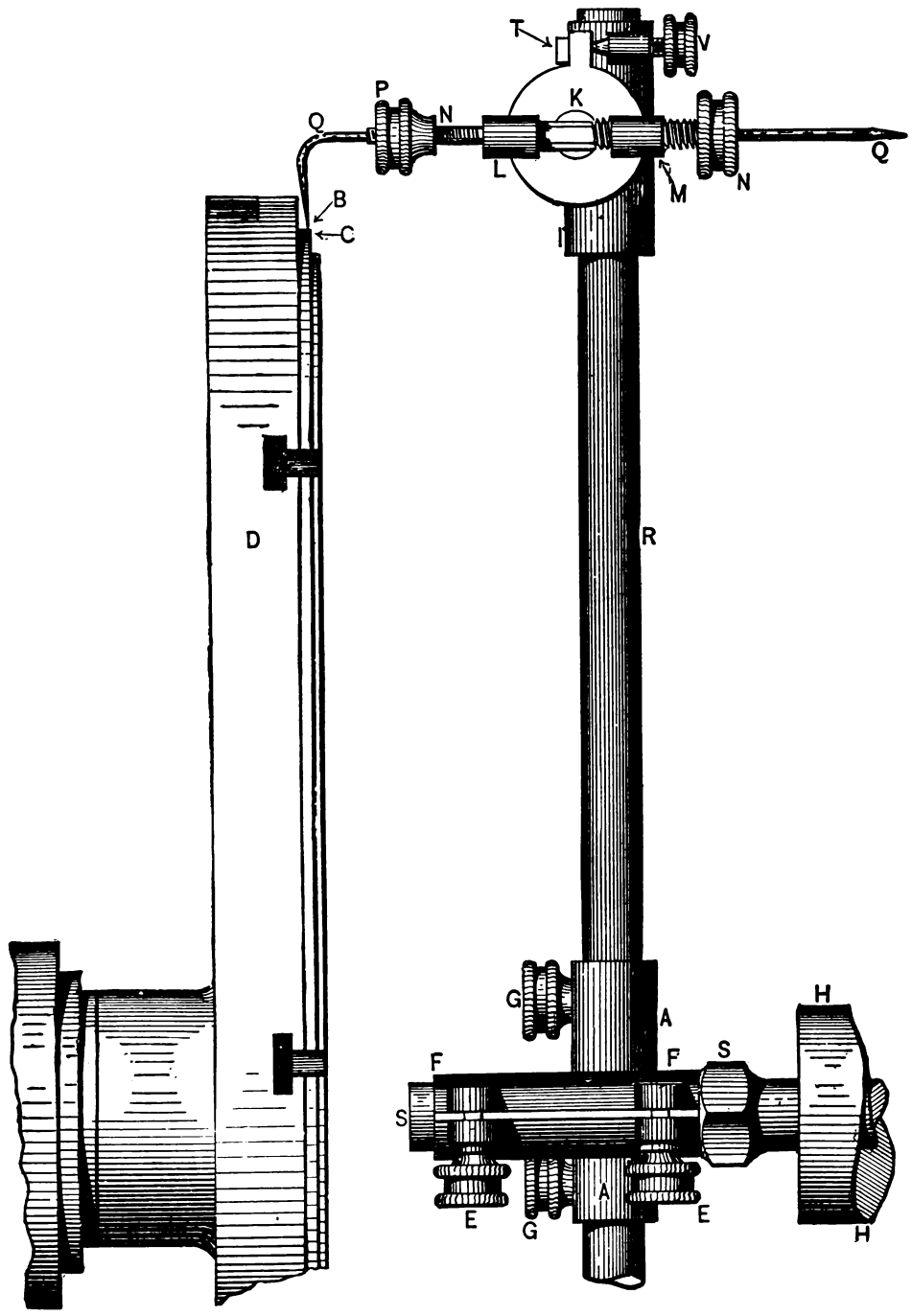

Fig. 2583.

The same device is used to test if the cross slide of the carriage or saddle is at a right angle to the lathe shears, the method of its application being as shown in Fig. 2584. The split sleeve A receives in this case a rod R, which is laid in the slideway S of the carriage or saddle, and a long rod H carries the needle-holding devices. The rod R is held fair against the slideway, and the face of the sleeve A is held against the edge of the carriage or

saddle. The needle Q is then adjusted to just touch the edge D of the lathe bed. When this adjustment is made the rod H is swung over to the right and the coincidence of the needle point again tried with the edge of the lathe bed, the cross slideway being at a right angle when the needle point touches the edge D of the lathe bed when tried on the left hand, and also on the right hand, of the carriage. The stiffening rod U is brought under tension by a nut operated against a lug on X. To counterbalance the overhanging weight of the rod H and its attachments, a rod carrying a weight W is employed. It is obvious that the truth of the operation depends wholly upon the straightness and parallelism of the enlarged sections P of the rod R, upon keeping the end face of A in contact with the carriage at Z, and upon the correct adjustment of the needle to the edge of the lathe bed.

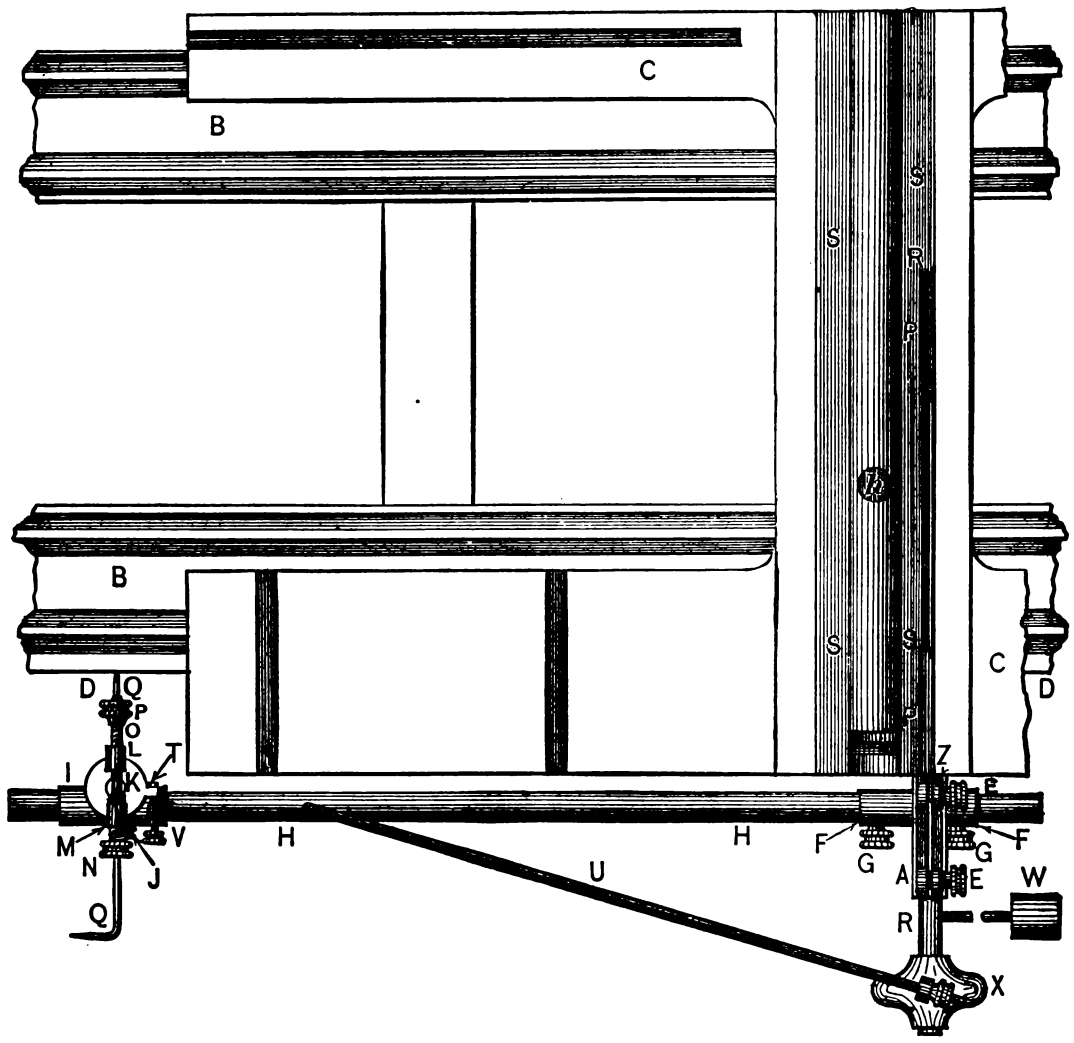

Fig. 2584.

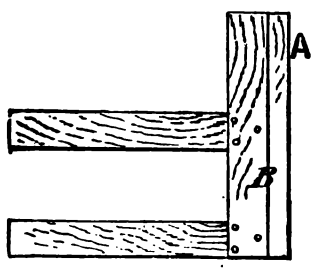

Fig. 2585.

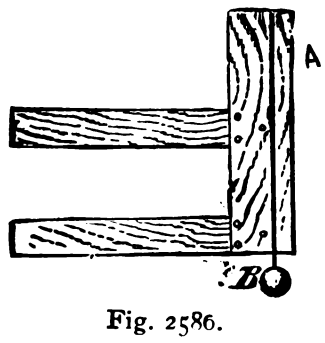

Fig. 2586.

SETTING LINE SHAFTING IN LINE.—The following method of adjusting line shafting or setting it in line, as it is termed, is that generally adopted in the best practice.

First prepare a number of rude wooden frames, such as shown in Fig. 2585. They are called targets, and are pieces of wood nailed together, with the outer edge face A planed true, and having a line marked parallel with the planed edge and about three-quarters of an inch inside of it. Upon this frame we hang a line suspending a weight and forming a plumb-line, and it follows that when the target is so held that the plumb-line falls exactly over and even all the way down with the scribed line, the planed face A, Fig. 2586, will stand vertical. To facilitate this adjustment, we cut a small V notch at the top of the scribed line, the bottom of the V falling exactly even with the scribed line, so that it will guide the top of the plumb-line even with the scribed line at the top; hence the eye need only be directed to causing the two lines to coincide at the bottom. To insure accuracy, the planed edge A

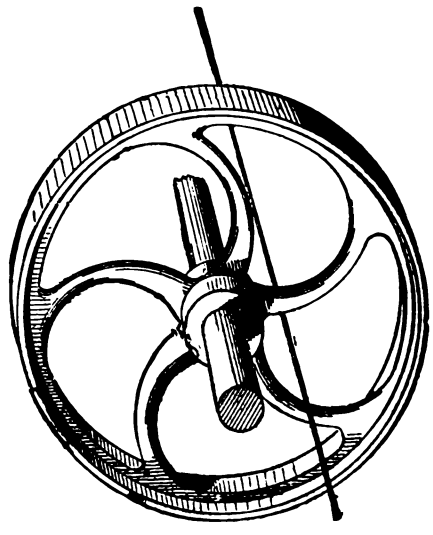

Fig. 2587.

should not be less than a foot in length. Then tightly stretch a strong closely-twisted and fine line of cord beside the line of shafting, as shown in Fig. 2587, placing it say six inches below and four inches on one side of the line of shafting, and equidistant at each end from the axial line of the same, adjusting it at the same time as nearly horizontally level as the eye will direct when stand-

ing on the floor at some little distance off and sighting it with the line shaft.

In stretching and adjusting this line, however, we have the following considerations :—It must clear the largest pulley hub on the line of shafting, those pulleys having set-screws being moved to allow it to pass. If the whole line of shafting is parallel in diameter, we set the line equidistant from the shafting at each end. If one end of the shafting is of larger diameter, we set the line farther from the surface of the shafting, at the small end, to an amount equal to one-half of the difference in the two diameters;

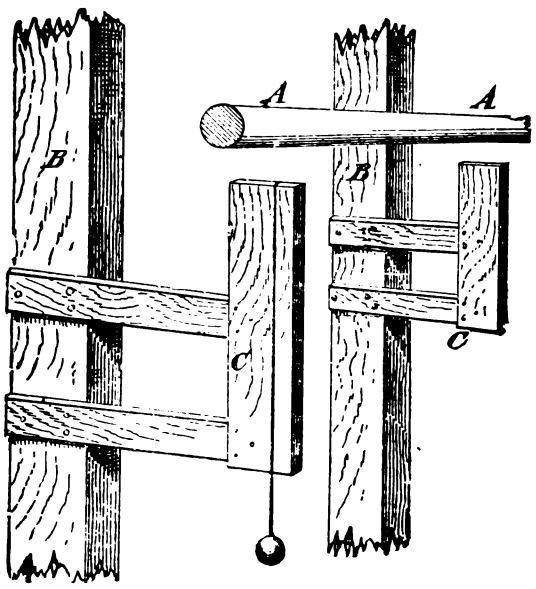

Fig. 2588.

and since the line is sufficiently far from the shafting to clear the largest hub thereon, it makes, so far as stretching the line is concerned, no difference of what diameter the middle sections of shafting may be. The line should, however, be set true as indicated by a spirit-level.

We may now proceed to erect the targets as follows: The planed edge A in Fig. 2585 is brought true with the stretched line, and is adjusted so that the plumb-line B in Fig. 2586 will stand true with the line or mark B. When so adjusted, the target is nailed to the post carrying the shafting hanger. In performing this nailing, two nails may be slightly inserted so as to sustain the target, and the adjustment being made by tapping the target

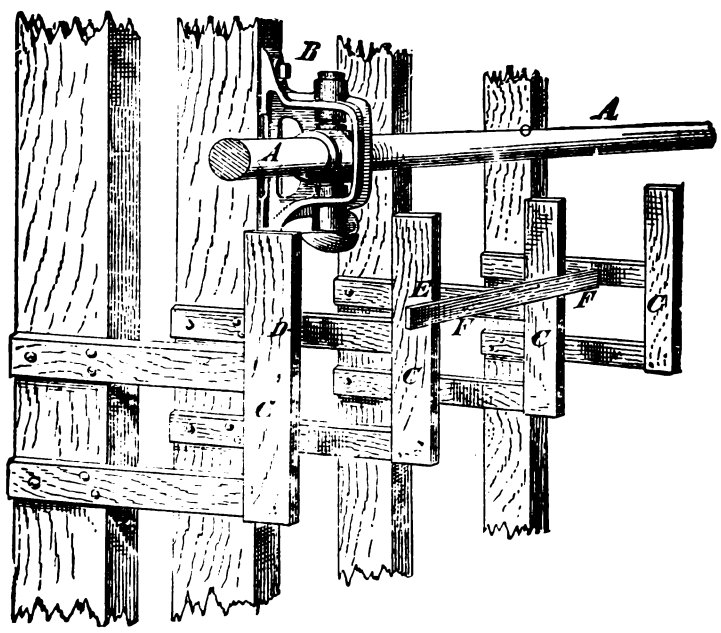

Fig. 2589.

with the hammer, the nails may be driven home, the operator taking care that driving the nails does not alter the adjustment.

In Fig. 2588 A A represents the line of shafting, B,B two of the hanger posts, and C,C two of the adjusted targets.

We have now in the planed edges A of the targets a rigid substitute for the stretched line, forming a guide for the horizontal adjustment, and to provide a guide for the vertical adjustment we take a wooden straight-edge long enough to reach from one post to another. Then beginning at one end of the shafting, we place the flat side of the straight-edge against the planed edge of two targets at a distance of about 15 inches below the top of the shafting; and after levelling the straight-edge with a spirit-level, we mark (even with the edge of the straight-edge) a line on the planed edge of each target, and we then move the straight-edge to the next pair of targets, and place the edge even with the mark already made on the second target. We then level the straight-edge with a spirit-level, and mark a line on the third target, continuing the process until we have marked a straight and horizontally level line across all the targets, the operation being shown in Fig. 2589, in which A represents the line of shafting, B the hangers, and C the targets. D represents the line on the first target, and E the line on second. F is the straight-edge, levelled ready to form a guide whereby the line D may be carried forward, as at E, level and straight, to the third target, and so on across all the targets.

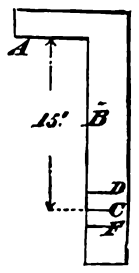

Fig. 2590.

The line thus marked is the standard whereby the shafting is to be adjusted vertically; and for the purpose of this adjustment, we must take a piece of wood, or a square, such as is shown in Fig. 2590, the edges A and B being true and at a right angle to each other. The line D, in Fig. 2589, marked across the targets being 15 inches below the centre line of the shaft at the end from which it was started, we mark upon our piece of wood the line C in Fig. 2590, 15 inches from the edge A (as denoted by the dotted line); and it is evident that we have only to adjust our shaft for vertical height so that, the gauge being applied at each target in the manner shown in Fig. 2591, the shaft will be set exactly true, when the mark C on the piece of wood comes exactly fair with the lines D marked on the targets.

For horizontal adjustment, all we have to do is to place a straight-edge along the planed face of the target, and adjust the shaft equidistant from the straight-edge, as shown in Fig. 2592, in which A is the shaft, B the target, C the straight-edge referred to, and D a gauge or distance piece. If, then, we apply the

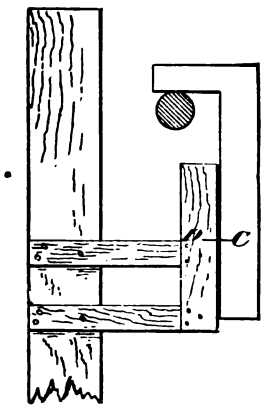

Fig. 2591.

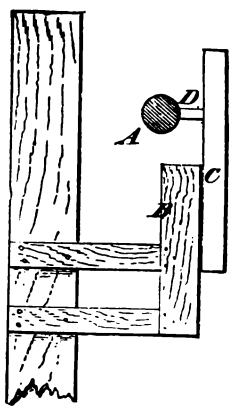

Fig. 2592.

straight-edge and wood gauge to every target, and to the adjustment, the whole line of shafting will be complete.

There are several points, however, during the latter part of the process at which consideration is required. Thus, after the horizontal line, marked on the targets by the straight-edge and used for the vertical adjustment, has been struck on all the targets, the distance from the centre of the shafting to that line should be measured at each end of the shafting, and if it is found to be equal, we may proceed with the adjustment; but if, on the other hand, it is not found to be equal, we must determine whether it will be well to lift one end of the shaft and lower the other, or make the whole adjustment at one end by lifting or lowering it, as the case may be. In coming to this determination we must bear in mind what effect it will have on the various belts, in making them too long or too short; and when a decision is reached, we must mark the line C, in Fig. 2590, on the gauge accordingly, and not at the distance represented in our example by the 15 inches.

The method of adjustment thus pursued possesses the advantage that it shows how much the whole line of shafting is out of true before any adjustment is made, and that without entailing any great trouble in ascertaining it; so that, in making the

adjustment, the operator acts intelligently and does not commence at one end utterly ignorant of where the adjustment is going to lead him to when he arrives at the other.

Then, again, it is a very correct method, nor does it make any difference if the shafting has sections of different diameters or not, for in that case we have but to measure the diameter of the shafting, and mark the adjusting line, represented in our example by C, in Fig. 2590, accordingly, and when the adjustment is complete, the centre line of the whole length of the line of shafting will be true and level. This is not necessarily the case, if the diameter of the shafting varies and a spirit-level is used directly upon the shafting itself.

In further explanation, however, it may be well to illustrate the method of applying the gauge shown in Fig. 2590, and the straight-edge C and gauge D shown in Fig. 2592, in cases where there are in the same line sections of shaftings of different diameters. Suppose, then, that the line of shafting in our example has a mid-section of $2\frac{1}{4}$ inches diameter, and is 2 inches at one, and $2\frac{1}{2}$ inches in diameter at the other end: all we have to do is to mark on the gauge, shown in Fig. 2590, two extra lines, denoted in figure by D and F. If the line C was at the proper distance from A for the section of $2\frac{1}{4}$ inches in diameter, then the line D will be at the proper distance for the section of 2 inches, and E at the proper distance for the section of $2\frac{1}{2}$ inches in diameter; the distance between C and D, and also between C and F, being $\frac{1}{8}$ inch, in other words, half the amount of the difference in diameters.

In like manner for the horizontal adjustment, the gauge piece shown at D in Fig. 2592 would require when measuring the $2\frac{1}{4}$ inch section to be $\frac{1}{8}$ inch shorter than for the 2 inch section, while for the $2\frac{1}{2}$ inch section would require to be $\frac{1}{8}$ inch shorter than that used for the $2\frac{1}{4}$ inch section, the difference again being one-half the amount of the variation in the respective diameters. Thus the whole process is simple, easy of accomplishment, and very accurate.

If the line of shafting is suspended from the joists of a ceiling instead of from uprights, the method of procedure is the same, the forms of the targets being varied to suit the conditions. The process only requires that the faced edges of the targets shall all stand plumb and true with the stretched line. It will be noted that it is of no consequence how long the stretched line is, since its sag does not in any manner disturb the correct adjustment. but in cases where it is a very long one it may be necessary to place pins that will prevent it from swaying by reason of air currents or from jarring.

The same system may be employed for setting the shafting hangers, the bores of the boxes being used instead of the shafting itself.

CHAPTER XXX.—LINE SHAFTING.

LINE SHAFTING.—A line of shafting is one continuous run or length composed of lengths joined together by couplings. The main line of shafting is that which receives the power from the engine or other motor, and distributes it to other lines of shafting, or to the various machines to be driven. In some practice each line of shafting is driven by a separate engine or motor, so that it may be stopped without stopping the others. This same object may be obtained by providing a clutch for each line. It is obvious that in each line of shafting the length nearest to the driving motor transmits the whole of the power transmitted by the line, and that the diameter of the shafting may, therefore, be reduced as it proceeds from the engine in a proportion depending upon the degree to which the power it is required to transmit is reduced. It is desirable, therefore, so far as the shafting is concerned, to place the machines requiring the most power to drive as near as possible to that end of the shafting that receives power from the motor. Line shafting is supported in bearings provided in what are termed hangers, which are brackets to be bolted to either suitable framing, to walls, posts, or to the ceiling or floor of the building. The short lengths of shafting that are provided to effect changes of speed, and to enable the machine to be stopped or started at pleasure, are termed countershafts. When there is interposed a countershaft between the motor and the main line of shafting, it is sometimes termed a jack shaft.

Shafting is usually made cylindrically true either by special rolling processes as in what is known as "cold-rolled," or "hot-rolled" shafting, or else it is turned up in the lathe. In either case it is termed bright shafting. What is known as black shafting is simply bars of iron rolled by the ordinary process and made cylindrically true only where it receives its couplings, and for its journal bearings, &c. The diameter of black shafting varies by a quarter of an inch, and is usually above its designated diameter by about $\frac{1}{32}$ inch.

The main body of the shafting not being turned cylindrically true and parallel, the positions of the pulleys cannot be altered upon the shafts, nor can pulleys be added to the shaft as occasion may require without the sections being taken down and seatings turned for the required pulleys to be added. Furthermore black shafting does not run true, and is in this respect also objectionable. Nevertheless, black shafting is used for some special cases where extra pulleys are not likely to be required and the shafting is exposed to the weather, as in the case of yards for the manufacture of building bricks.

The diameters of bright or turned shafting (which is the ordinary form in which shafting is made, unless otherwise specified) vary by $\frac{1}{4}$ inch up to about $3\frac{1}{2}$ inches in diameter; but the actual diameter is $\frac{1}{16}$ inch less than the denominated commercial diameter, which is designated from the diameter of the round bar iron from which the shafting is turned; thus a length of what is known as 2-inch shafting will have an actual diameter of $1\frac{15}{16}$ inches, being parallel, or as nearly parallel as it is practicable to turn it in the ordinary lathe.

Cold-rolled shafting has its actual diameter agreeing with its designated or commercial diameter, and is parallel throughout its length.

In England the diameters of shafting vary by eighths of inches for diameters of an inch and less, and by quarters of an inch for diameters above an inch, the commercial and the actual diameters being alike.

The strains to which a line of shafting is subject are as follows: The torsional strain due to rotating the line of shafting, independent of the power transmitted; the torsional strain due to the amount of the power transmitted; and the transverse strain due to the unequal belt pressures and distances from the bearings of the driving or transmitting pulleys. The first and the last are, however, so intimately connected in practice that they may be considered as one: hence we have, 1st, the torsional strain due to driving the whole load, and, 2nd, the transverse strain due to the belt pressures being exerted more on one side than on another of the shaft, and to the belt pulleys being at unequal distances from the hanger bearings.

The first may be reduced to a minimum by so proportioning the strength of the line of shafting that it shall be capable of transmitting the required amount of power at the various sections of its length without suffering distortion of straightness beyond certain limits, and shall be at the same time as light as is consistent with this duty and a certain factor of safety.

Referring for a moment to the above limitation, the weight of the shaft itself will cause it to deflect between the hanger bearings, and the amount of this deflection will depend upon the distance apart of the points of support, or, in other words, of the distance apart of the hanger bearings.

The second may be reduced to a minimum by so regulating the distance apart of the hanger bearings that the deflection of the shaft from the belt pressures shall not be sufficient to produce sensible irregularities in the axis of rotation of the shaft; by so connecting the bearings to the hangers that they shall be rigidly held, and yet capable as far as possible of automatically adjusting their bores to be true with the shaft axis, notwithstanding its deflection from any cause; by placing the pulleys transmitting the most power as near to the hanger bearings as practicable; by so disposing the driving belts as to deliver the power as near as possible equally on all sides of the shaft; and by having the shafting and the pulleys balanced so as to run true, so that the strains on the pulleys shall be equal at each point in the shaft rotation. From this it appears that the distance apart of the shafting hangers may vary according to the amount of power transmitted by a shaft of a given diameter. The following table (given by Francis) gives the greatest admissible distances between the bearings of continuous shafts subject to no transverse strain except from their own weight, as would be the case were the power given off from the shaft equally on all sides, and at an equal distance from the hanger bearing.

Diameter of shaft in inches.	Distance between bearings, in feet.	
	Wrought-iron shafts.	Steel shafts.
2	15·46	15·89
3	17·70	18·19
4	19·48	20·02
5	20·99	21·57
6	22·30	22·92
7	23·48	24·13
8	24·55	25·23
9	25·53	26.24

These conditions, however, do not usually obtain in the transmission of power by belts and pulleys, and the varying circumstances of each case render it impracticable to give any rule which would be of value for universal application.

For example, the theoretical requirements would demand that the bearings be nearer together on those sections of shafting where most power is delivered from the shaft, while considerations as to the location and desired contiguity of the driven machines may render it impracticable to separate the driving pulleys by the intervention of a hanger at the theoretically required location. The nearer together the bearings the less the deflection either from the shaft's weight or from the belt stress, and since the friction of the shaft in its bearings is theoretically independent of the journal-bearing area, the closer the bearings the more perfect the theoretical conditions; but since

it is impracticable to maintain the true alignment of the shaft, and as the friction due to an error in alignment would increase with the nearer proximity of the bearings, they are usually placed from about 7 to 12 feet apart, according to the facilities afforded in the location in which they are to be erected.

It is to be observed, however, that the nearer together the bearings are the less the diameter, and, therefore, the lighter the shafting may be to transmit a given amount of power, and hence the less the amount of power consumed in rotating the shafting in its bearings.

COLD-ROLLED SHAFTING.—This is shafting made cylindrically round and parallel by means of cold rolling, which leaves a smooth and bright surface. The effects of cold rolling upon the metal have been determined by Major Wm. Wade, U.S.A., Sir William Fairbairn, C.E., and Professor Thurston, of the Stevens Institute, as follows :—

The experiments were made upon samples of cold-rolled shafting submitted by Messrs. Jones and Laughlins, of Pittsburgh, Pennsylvania.

"It is made exactly to gauge diameter, and for many purposes requires no further preparation.

"The cold-rolled metal resists stresses much more uniformly than does the untreated metal. Irregularities of resistance exhibited by the latter do not appear in the former; this is more particularly true for transverse stress.

"This treatment of iron produces a very important improvement in uniformity of structure, the cold-rolled iron excelling common iron in density from surface to centre, as well as in its uniformity of strength from outside to the middle of the bar.

"This great increase of strength, stiffness, elasticity, and resilience is obtained at the expense of some ductility, which diminishes as the tenacity increases. The modulus of ultimate resilience of the cold-rolled iron is, however, above 50 per cent. of that of the untreated iron.

"Cold-rolled iron thus greatly excels common iron in all cases where the metal is to sustain maximum loads without permanent set or distortion."

SUMMARY OF THE RESULTS OBTAINED BY MAJOR WADE FROM NUMEROUS EXPERIMENTS WITH ORDINARY HOT-ROLLED BAR IRON, COMPARED WITH THE RESULTS OBTAINED FROM THE SAME KINDS OF IRON ROLLED AND POLISHED WHILE COLD BY LAUTH'S PATENT PROCESS.

		Iron rolled while		Ratio of increase by cold rolling.	Average rate per cent. of increase.
		Hot.	Cold.		
TRANSVERSE.—Bars supported at both ends; load applied in the middle; distance between the supports, 30 inches. Weight which gives a permanent set of one-tenth of an inch, viz.	$1\frac{1}{2}$ inch square bars	3,100	10,700	3·451	$162\frac{1}{2}$
	Round bars, 2 inch diameter	5,200	11,100	2·134	
	Round bars, $2\frac{1}{4}$ " "	6,800	15,600	2·294	
TORSION.—Weight which gives a permanent set of one degree, applied at 25 inches from centre of bars. Round bars, $1\frac{3}{4}$ inch diameter, and 9 inches between the clamps		750	1,725	2·300	130
COMPRESSION.—Weight which gives a depression, and a permanent set of one-hundredth of an inch to columns $1\frac{1}{2}$ inches long and $\frac{5}{8}$ inch diameter		13,000	34,000	2·615	$161\frac{1}{2}$
Weight which bends and gives a permanent set to columns 8 inches long and $\frac{3}{4}$ inch diameter, viz.	Puddled iron	21,000	31,000	1·476	64
	Charcoal bloom iron	20,500	37,000	1·804	
TENSION.—Weight per square inch, which caused rods $\frac{3}{4}$ inch diameter to stretch and take a permanent set, viz.	Puddled iron	37,250	68,427	1·837	95
	Charcoal bloom iron	42,439	87,396	2·059	
Weight per square inch, at which the same rods broke, viz.	Puddled iron	55,760	83,156	1·491	72
	Charcoal bloom iron	50,927	99,293	1·950	
HARDNESS.—Weight required to produce equal indentations		5,000	7,500	1·500	50

NOTE.—Indentations made by equal weights, in the centre, and near the edges of the fresh cut ends of the bars, were equal; showing that the iron was as hard in the centre of the bars as elsewhere.

GENERAL SUMMARY OF THE RESULTS OBTAINED BY SIR WILLIAM FAIRBAIRN'S EXPERIMENTS.

	Condition of bar.	Breaking weight of bar in lbs.	Breaking weight per square inch.		Strength, the untouched bar being unity.
			In lbs.	In tons.	
1	Untouched (black)	50,346	58·628	26·173	1·000
3	Rolled cold	69,295	88·230	39·388	1·505
4	Turned	47,710	60·746	27·119	1·036

NOTE.—In the above summary it will be observed that the effect of consolidation by the process of cold rolling is to increase the tensile powers of resistance from 26·17 tons per square inch, to 39·38 tons, being in the ratio of 1 : 1·5, one-half increase of strength gained by the new process of cold rolling.

Extract from the general conclusions arrived at by Professor R. Thurston from experiments.

"The process of cold rolling produces a very marked change in the physical properties of the iron thus treated.

"It increases the tenacity from 25 to 40 per cent., and the resistance to transverse stress from 50 to 80 per cent.

"It elevates the elastic limit under torsional as well as tensile and transverse stresses, from 80 to 125 per cent. . . .

"It gives the iron a smooth bright surface, absolutely free from the scale of black oxide unavoidably left when hot rolled.

From this it appears that cold-rolled iron is peculiarly adapted for line shafting. Suppose, for example, a given quantity of power to transmit, and that a length of cold-rolled and a length of hot-rolled iron be connected together to form the line. Then the diameters of the two being such as to have equal torsional strength, we have—

1st. That the weight of the cold rolled will be the least, and it will, therefore, produce less friction in the hanger bearings.

2nd. That the cold rolled will be harder, and will therefore suffer less from abrasion of the journals.

3rd. That being of smaller diameter the journals are more easily and perfectly lubricated.

The resistance to transverse stress (say) 50 per cent.; but the elastic limit under transverse stress is increased from 80 to 125 per cent., accepting the lesser amount we have in the case of the two shafts.

4th. That the resistance to permanent set or bend will be 30 per cent. more in the cold rolled.

5th. The accuracy to gauge diameter enables the employment of a coupling having a continuous sleeve, and gives an equal bearing along the entire coupling bore.

6th. The reduction of shaft diameter enables the employment of a smaller and lighter coupling; and

7th. The hubs of the pulleys may be made smaller and lighter, are easier to bore, and may be bored to gauge diameter with the assurance that they will fit the shaft.

The friction between the journals of a line shafting and its bearings depends so intimately upon the distance apart of the bearings, upon the alignment of the same, upon the accurate bedding of the shaft journals to the bearings, and upon the amount of transverse strain; and this latter is so influenced by the amount of power that may be delivered from one side of the shaft more than from another, that the application of rules for determining the said friction under conditions of perfect alignment rigidity would be practically useless. The conditions found in actual practice are so widely divergent and so rarely alike, or even nearly alike, that the consideration of this part of the subject would, in the opinion of the author, be of no practical value. The reader, however, is referred to the remarks made with reference to the friction of journals.

To prevent end motion to a line of shafting it is necessary that there be fixed at some part of the line two shoulders, or collars, on relatively different sides of a bearing, or of the bearings, these collars meeting the side faces of the bearing. If shoulders are produced by reducing the diameter of the journal bearing of the shaft, the strength of the shafting is reduced to that at the reduced bearing, because the strength of the whole can be no greater than its strength at the weakest part. If collars are placed one on each end of the line of shafting, the difficulty is met that the collars will permit end motion to the shaft whenever the temperature of the shaft is greater than that which obtained at the time at which the collars were adjusted, which occurs on account of the increased expansion of the shaft. On the other hand the collars will bind against the side faces of the bearing boxes whenever the shaft is at a lower temperature than it was at the time of setting the shaft, because of the contraction of the shaft's length, and this would cause undue friction, abrasion, and wear.

It is preferable, therefore, to place such collars one on each side of one bearing, so that the difference in contraction and expansion from varying temperatures shall be confined to the difference in expansion between the metal of which the bearing and shaft respectively are composed in the length of the bearing only, instead of being extended to the difference in expansion between the shaft throughout its whole length and that of the framework to which the hangers, or bearings, are bolted.

The collars may be shrunk on to the shaft so as to avoid the necessity of set-screws, or if set-screws are used they should be as short as is practicable so as to avoid the liability to catch against the lacings, &c., of belts, which, on slipping off the pulley may come into contact with the set-screw head. The Lane and Bodley Co., of Cincinnati, employ a collar (for loose pulleys, &c.) in which the radius of the collar for a width equal to the diameter of the set-screw head, is equal to that of the set-screw head thus projecting from

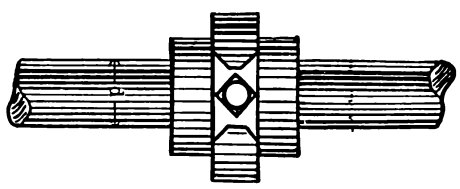

Fig. 2593.

the centre of the collar circumference, a slot in the ring affording access to the set-screw head, as shown in Fig. 2593. By this means the head of the set-screw is protected from contact with a belt, in case the latter should be off the pulley and resting upon the shaft.

As a rule it is preferable that the collars, to prevent end motion to the shaft, be placed at the bearing nearest to the engine or motor; and this is especially desirable where bevel-wheels are employed to drive the shaft, because in that case the pitch lines of the wheels are kept to coincide as nearly as practicable, and the teeth are prevented from getting too far into or out of gear.

DIAMETERS OF LINE SHAFTING.—The necessary diameters of the various length of the shafts composing a line of shafting, should be proportioned to the quantity of power delivered by each respective length, and in this connection the position of the various pulleys upon the length and the amount of power given off by the pulley is an important consideration. Suppose, for example, that a piece of shafting delivers a certain amount of power, then it is obvious that the shaft will deflect or bend less if the pulley transmitting that power be placed close to a hanger or bearing than if it be placed midway between the two hangers or bearings.

The strength of a shaft to resist torsion is the cube of its diameter in inches, multiplied by the strength of the material of which the shaft is composed, per square inch of cross-sectional area, giving the strength in statical foot-pounds. The application of this rule is to find the necessary strength of the shaft to convey power irrespective of the distance from its centre at which it delivers such power.

But since the point at which the power to produce torsion is applied is at the rim of the pulley, the amount of torsion produced upon a shaft by a given stress must be obtained by multiplying the given amount of stress by the radius of the pulley in inches and parts of an inch. Example: the static stress upon a pulley, 24 inches diameter, is 100 lbs., what static torsion does it exert upon the shaft?

Here, stress 100 × 12 (radius of the pulley) = 1200 = static torsional stress.

In the following rules for finding the necessary diameters and strengths of shafts, the margin of extra diameter for strength necessary for safety is included, so that the given sizes are working diameters.

To find the necessary diameter of shaft from a given torsional stress.—Rule, divide the torsional stress expressed in statical foot lbs., by 57·2 for steel, by 27·7 for wrought iron, or by 18·5 for cast iron, and the cube root of the quotient is the required working diameter of shaft expressed in inches.

To find the maximum amount of horse-power capable, within good working limits, of being transmitted by a *shaft* of a given diameter.—Rule, multiply the cube of the diameter of the shaft, in inches, by its revolutions per minute and divide by 92 for steel, by 190 for wrought-iron, or by 285 for cast-iron shafts, and the quotient is the amount of horse-power.

Since, in this rule, the horse-power is a given quantity, the diameter of the pulley is of no consequence, since with a given stress it must have been taken into account in obtaining the horse-power.

To find the revolutions per minute a shaft will require to make to transmit a given amount of horse-power.—Rule, multiply the given amount of horse-power by 92 for steel, by 190 for wrought-iron, or by 285 for cast-iron shafts, and divide the product by the cube of the diameter of the shaft expressed in inches, and the quotient is the required revolutions per minute for the shaft.

The rule adopted by William Sellers and Co. to determine the size of shafts to transmit a given horse-power is:—Rule, divide the cube root of the horse-power by the revolutions per minute and multiply the quotient by 125, the product is the diameter of shaft required.

This gives a shaft strong enough to resist flexure, if the bearings are not too far apart. The distance apart that the bearings should be placed is an important consideration. Modern millwrights differ slightly in opinion in this respect: some construct their mills with beams 9 feet 6 inches apart, and put one hanger under each of the beams; others say 8 feet apart gives a better result. We are clearly of opinion that with 8 feet distance, and shafting lighter in proportion, the best result is obtained.

The following table (from "Machine Tools," by Wm. Sellers and Co.) gives the strength of round wrought iron as given by Clark:—

TABLE SHOWING STRENGTH OF ROUND WROUGHT-IRON SHAFTING.

Diameter of shaft.	Torsional Action.					Transverse Action.		
						Under the gross distributed weight.		Under the net weight of shaft.
	Ultimate resistance.	Working stress.	Work for one turn per minute.	Horse Power at the rate of one turn per minute.	Speed in turns per minute for one-horse power.	Distance of bearings for the limiting deflection.	Gross weight for the span.	Distance of bearings for the limiting deflection.
1	2	3	4	5	6	7	8	9
Inches.	Stat'l ft. tons.	Stat'l ft. lbs.	Ft. lbs.	H. P.	Turns.	Feet.	Lbs.	Feet.
1	·42	27·7	174	·00526	190	6·6	30	7·9
1¼	·82	54·1	340	·01028	97·3	7·7	55	9·2
1½	1·42	93·5	587	·01779	56·2	8·6	89	10·3
1⅝	1·80	118·9	746	·02259	44·3	9·2	112	11·0
1¾	2·25	148·4	932	·02820	35·4	9·6	134	11·5
1⅞	2·77	182·6	1,147	·03469	28·8	10·1	163	12·1
2	3·36	221·6	1,391	·04211	23·7	10·5	193	12·7
2⅛	4·00	265·8	1,669	·05062	19·8	11·0	227	13·2
2¼	4·80	315·5	1,981	·05995	16·7	11·4	264	13·7
2⅜	5·62	371·1	2,330	·07051	14·2	11·8	305	14·2
2½	6·56	432·8	2,718	·08224	12·2	12·5	359	15·0
2¾	8·73	576·1	3,618	·1094	9·14	13·0	450	15·6
3	11·3	747·9	4,697	·1421	7·04	13·7	566	16·5
3¼	14·4	951·0	5,972	·1807	5·54	14·5	701	17·4
3½	18·0	1,188	7,458	·2257	4·43	15·2	854	18·3
3¾	22·1	1,461	9,173	·2775	3·60	16·0	1,029	19·2
4	26·9	1,773	11,136	·3368	2·97	16·7	1,225	20·1
4¼	32·2	2,127	13,345	·4040	2·48	17·4	1,439	20·9
4½	38·2	2,524	15,851	·4796	2·09	18·1	1,679	21·7
4¾	45·0	2,969	18,635	·5642	1·77	18·8	1,943	22·6
5	52·5	3,463	21,750	·6579	1·52	19·4	2,220	23·3
5¼	60·7	4,008	25,177	·7616	1·31	20·0	2,525	24·0
5½	69·8	4,609	28,936	·8758	1·14	20·6	2,854	24·7
5¾	79·8	5,266	33,077	1·000	1·00	21·2	3,210	25·4
6	90·6	5,983	37,584	1·137	·880	21·6	3,600	26·2
6½	117	7,606	47,780	1·445	·692	22·9	4,421	27·5
7	144	9,501	59,682	1·805	·554	24·2	5,426	29·0
7½	177	11,680	73,254	2·220	·450	25·3	6,518	30·4
8	215	14,180	89,088	2·694	·371	26·5	7,774	31·8
8½	258	17,010	106,836	3·232	·309	27·6	9,133	33·1
9	306	20,190	126,846	3·837	·261	28·7	10,650	34·4
9½	360	23,750	149,118	4·512	·222	29·8	12,320	35·7
10	420	27,700	174,000	5·260	·190	30·8	14,100	36·9
11	559	36,870	231,594	7·005	·143	32·8	18,180	39·4
12	725	47,860	300,672	9·095	·110	34·7	22,880	41·7
13	922	60,860	382,278	11·83	·0865	36·6	28,330	44·0
14	1,152	76,010	477,456	14·44	·0693	38·5	34,560	46·2
15	1,417	93,490	587,250	17·76	·0563	40·3	41,530	48·4
16	1,720	113,500	712,704	21·56	·0464	42·1	49,330	50·5
17	2,062	136,100	854,862	25·86	·0387	43·3	57,970	52·6
18	2,447	161,500	1,014,768	30·69	·0326	45·5	67,490	54·6
19	2,880	190,000	1,193,466	36·10	·0277	47·2	78,040	56·6
20	3,360	221,600	1,392,000	42·11	·0237	48·8	80,660	58·5
NOTE.—To find the corresponding values for shafts of cast iron or steel, multiply the tabular values by the following multipliers:								
Cast iron .	⅖	⅔	⅔	⅔	1·5	·86	·81	·86
Steel .	1·2	2·06	2·06	2·06	·48	1·05	1·07	1·05

"It is advantageous that the diameter of line shaft be kept as small as is possible with due regard to the duty, so as to avoid extra weight in the shafting hangers, pulley hubs and couplings, whose weights necessarily increase with the diameter of the shafting.

"SPEEDS FOR SHAFTING.—The speed at which shafting should run is determined within certain limits by the kind of machinery it is employed to drive. Shafting to drive wood-working machines may, for example, be made to rotate much faster than that employed to run metal-cutting machines, because the motions in the wood-working machines themselves are faster than those in metal-cutting machines. In a general sense, the rotation of shafting is greater in proportion as the movements of the machines driven require to run faster.

"This occurs because in proportion as the driving pulleys of the machines require to rotate faster than the line shaft, the diameters of the pulleys on the line shaft must be larger than the diameters of those on the machines; hence a great variation in speed would demand a corresponding increase of diameter of pulley on the line shaft, and the extra weight of this pulley would be so much added to the weight causing friction, as well as so much added to the cost. If small pulleys were used and countershafts employed to multiply the speed the cost would be increased, extra room would be taken up; indeed, this is so obvious as to require no discussion, further than to remark that the faster the shafting rotates the smaller may be its diameter to transmit a given horse-power. From deflection and weakness to resist transverse strains and other obvious causes it is not found in practice desirable to employ line shafts of less than about 1¼ inches in diameter, and the diameters of shafting employed are usually arrived at from a calculated speed of about 120 revolutions per minute for metal-cutting machines such as used in machine shops, 250 revolutions per minute for wood-working machines, and from 300 to 400 revolutions per minute for cotton and woollen mills, and the countershafts for the machines usually have pulleys of the requisite diameters to convert this speed of rotation into that required to run each respective machine. Tubular or hollow shafting has been made to run at 600 revolutions per minute, but this kind of shafting has been of very limited application because of its expensiveness.

"It is obvious that since the speed of a line shaft is used as a multiplier in the calculation of the horse-powers of shafts, a given diameter of shaft will transmit more power in proportion as its speed is increased. Thus a shaft capable of transmitting 20 horse-power when making 120 revolutions per minute will transmit 40 horse-power if making 240 revolutions per minute.

"There are now running in some factories lines of shafting 1,000 feet long each. The power is generally applied to the shaft in the centre of the mill and the line extended each way from this. The head shaft being, say, 5 inches in diameter, the shafts extending each way are made smaller in proportion to the rate of distribution, so that from 5 inches they often taper down to $1\frac{3}{4}$.

"When very long lines of shafting are constructed of small or comparatively small diameter, such lines are liable to some irregularities in speed, owing to the torsion or twisting of the shaft as power is taken from it in more or less irregular manner. Shafts driving looms may at one time be under the strain of driving all the looms belted from them, but as some looms are stopped the strain on the shaft becomes relaxed, and the torsional strain drives some part of the line ahead, and again retards it when the looms are started up. This irregularity is in some cases a matter of serious consideration, as in the instance of driving weaving machinery. The looms are

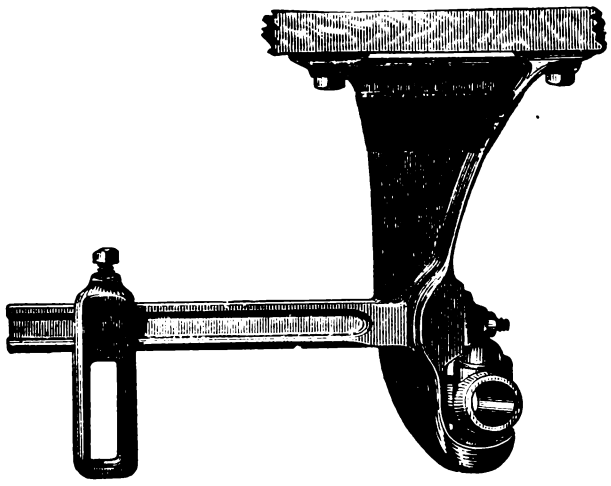

Fig. 2594.

provided with delicate stop motion, whereby the breaking of a thread knocks off the belt shifter and stops the loom. An irregular driving motion is apt to cause the looms to knock off, as it is called, and hence the stopping of one or more may cause others near to them to stop also. This may in a measure be arrested by providing fly-wheels at intervals on the line shaft, so heavy in their rim as to act as a constant retardant and storer of power, which power is given back upon any reaction on the shaft, and thus the strain is equalized. We mention this, as at the present time it is occupying the thoughts of prominent millwrights, and the relative advantage and disadvantage of light and heavy fly-wheels are being discussed, and is influencing the proportions of shafting in mill construction.*"

Countershafts are separate sections of shafting (usually a short

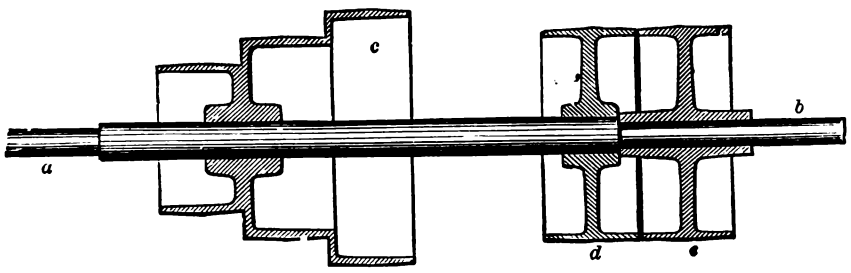

Fig. 2595.

section) employed to increase or diminish belt speed, to alter the direction of belt motion, to carry a loose as well as a fast pulley (so that by moving the belt on to the loose pulley it may cease to communicate motion to the machine driven), and for all these purposes combined.

An excellent form of countershaft hanger is shown in Fig. 2594, the guide for the slide being adjustable along the arm, and fixed in its adjusted position by means of the set-screws. The bearing is self-adjusting horizontally for alignment. The countershaft is shown in Fig. 2595, *a b* being the bearings, *c* the cone pulley, *d* the fast and *e* the loose pulley, which is placed next to the bearing, so that it may be oiled without having to reach past the belt and fast pulley. By reducing the journal for the loose pulley no collar is needed, the shaft shoulder and the face of the bearing serving instead.

* From "Machine Tools," by William Sellers and Co.

When the direction of rotation of the cone pulley on the countershaft requires to be occasionally reversed, there are two belts, an open one and a crossed one, from the line shaft to the countershaft, and there are three pulleys on the countershaft, their arrangement being as shown in Fig. 2596. L L′ are two loose pulleys, one receiving the open and the other the crossed belt, both these pulleys being a little more than twice the width of the belt; F is a fast pulley. By operating the belt skipper or shifter in the requisite direction either the open or the crossed belt is brought upon the fast pulley, the other belt merely moving across the width of its loose pulley, which must be twice that of the fast one. In the position of the belt shifter shown in the cut, both belts would be upon the loose

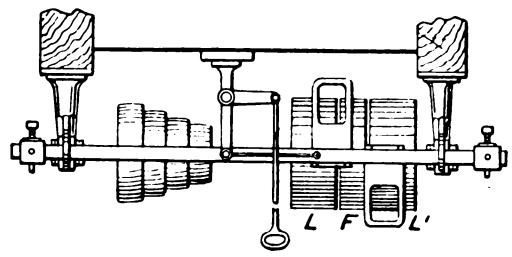

Fig. 2596.

pulleys L L′, hence the countershaft would remain at rest. If the direction of rotation of one pulley is required to be quicker than the other, two fast pulleys, each slightly more than twice the width of the belt, may be placed upon the line shaft, one of them being of enlarged diameter, to give the requisite increased velocity.

In Fig. 2597 Pratt's patent friction clutch is shown applied to a countershaft requiring to rotate in both directions, but quicker in one direction than in the other; hence, one of the pulleys is of smaller diameter than the other. The pulleys are free to rotate upon the countershaft unless engaged by the clutch, which is constructed as follows:—

The inside surface of the pulley rim is bored and the end surface of the shoes is turned to correspond. The shoes are in the form of a bell crank, upon the exposed end of which is provided a small lug, clearly shown in the cut. To prevent end motion of the pulley a collar is placed on one side of it and secured to the countershaft, while, on the other, the sleeve to which the shoes are pivoted is also secured to the countershaft; upon the shaft between the two pulleys there is a sleeve, having at each end a conical hub. When this sleeve is moved to the right, its right-hand coned hub passes between the lugs on the exposed ends of the shoes, forcing these lugs apart and causing the shoes to grip the bore of the large pulley, which thereupon rotates the shaft through the medium of the sleeve upon which the shoes are pivoted. Similarly, if the engaging (and disengaging) sleeve be moved to the left it will pass between the

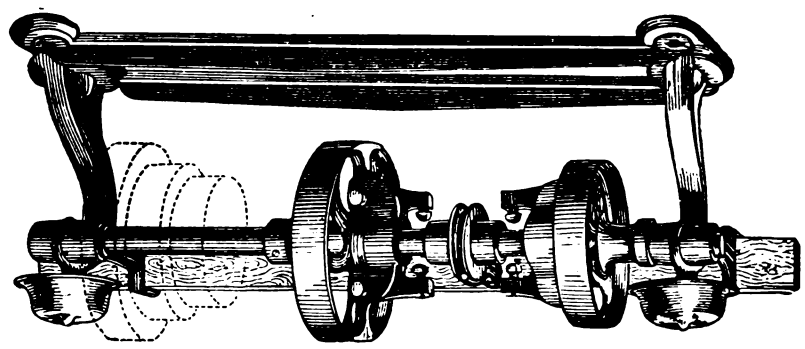

Fig. 2597.

lugs of the shoes on the left-hand pulley, which will, therefore, be caused to drive the shaft. In the position shown in the cut the engaging sleeve is clear of the ends of all the shoes, hence the pulleys would be caused to rotate (by their belts), but the shafts, &c., would remain stationary.

In yet another form the inner face of the pulley rim is coned, and in place of shoes a disk, whose circumference is coned to fit the pulley rim, is fast upon the shaft. The shaft is provided with a fixed collar, and from this collar, as a fulcrum, the pulley and disk are (by means of short levers attached to a sleeve upon the countershaft) brought into contact, the thrust on the other side of the pulley being sustained by a conical surface on the sleeve, fitting to a

similar cone on the hub of the pulley. Thus the pulley is gripped between two coned surfaces, one on each side, and is released by moving the sleeve laterally so as to relieve the grip, which it does noiselessly.

By this means motion to the shaft is communicated from the pulley without the sudden shock incidental to the impact of two fixed pieces, because the grip of the cones is gradual, and a certain amount of slip may occur until such time as the grip of the surfaces is sufficient to drive by friction.

Fig. 2598* represents a cone friction clutch pulley. The outer half is a working fit upon the shaft, but is secured against end motion by the collar D. The sliding half is coned and covered with leather as shown at C C, the outer half being coned to correspond. The sliding half is driven by a feather fast in its bore, and sliding in a feather-way or spline in the shaft.

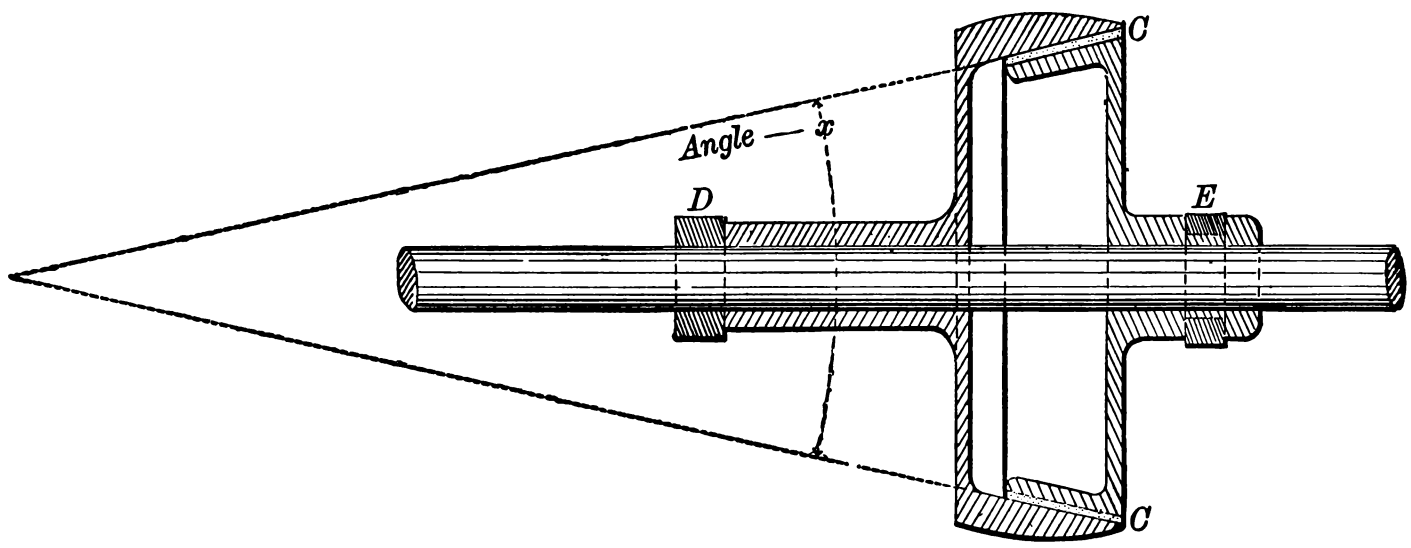

Fig. 2598.

The driving power of the device is obtained by means of the friction of the coned surfaces. The less the angle x of the cones the more power transmitted with a given pressure of the internal to the external cone.

On the other hand, however, this angle may be so little that the external cone will not release the internal one when the end pressure on the latter is removed.

The object is, therefore, to so proportion the angle x of the cones that their friction will be a maximum, while the internal cone may be moved endwise and unlocked from the external without undue effort or strain at the moving clutch bar E. If the angle be 30 degrees, the clutch will release itself when the lateral pressure is removed. If the angle be 25 degrees the internal cone will require a slight lateral pressure to release it. If the angle be 20 degrees, the internal cone cannot be released by end pressure applied by hand.

The transmitting capacity of the clutch depends upon the pressure applied to maintain the cones in contact, and therefore upon the leverage of the clutch bar, whose fork end is shown in section at E.

It is desirable that the end pressure be as small as possible, because of the friction between E and the hub of the sliding half of the pulley.

The hangers which carry the bearing boxes supporting shafting may be divided into four principal classes :—Those in which the bearing boxes are permitted to swivel, and to a certain extent to adjust themselves, to the axial line of the shafting, and having means to adjust the vertical height of the bolts.

Those in which the bearings are incapable of such adjustments.

Those in which the bearing boxes are supported on each side ; and those in which the bearing is supported on one side only, so that the shafting may be taken down without disturbing the couplings.

The first named are desirable in that they eliminate to a certain extent the strains due to the extra journal bearing friction which occurs when the shafting is sprung out of its true alignment, and obviate to a great extent the labor involved in fitting the bore of the bearing boxes to the journals of the shafting, so as to hold the same with its axis in a straight line, while they permit of vertical movement to attain vertical alignment.

Fig. 2599 represents Wm. Sellers & Co.'s ball-and-socket hanger which has come into extensive use throughout the United States: *a* represents the frame of the hanger threaded to receive the cylindrical threaded plungers *d e*, which therefore by rotation advance or recede respectively from the centre of the bearing boxes *b c*.

The ends of these plungers are concave, and the top and bottom halves of the bearing boxes are provided with a spheroidal section fitting into the concaves of the plungers, so that when the plungers are adjusted to fit (a working fit) against the boxes, the latter are held in a ball-and-socket or universal joint, which permits motion in any direction, the centre of such motion being central to the spherical concaves on the ends of plungers *e d*.

To adjust the vertical height of the bearings or boxes, it is simply necessary to rotate the plungers *d e*, in the threaded holes in the frame. F is simply a dish to catch the lubricating oil after it has passed through the bearing.

It is obvious that if a shaft be aligned axially true, and held in a box of this design, the centre of a length of shaft on either side

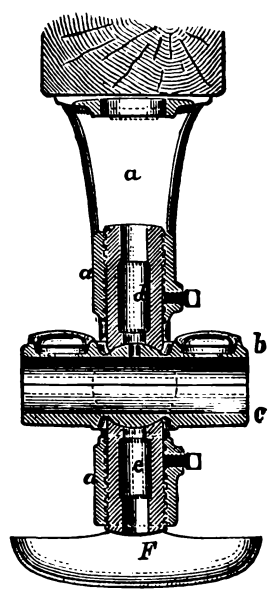

Fig. 2599.

of the box may be sprung or deflected out of alignment, and that the box will adjust itself so that its bore will be parallel with the axis of the shaft thus deflected, hence the friction between the shaft journal and the bearing box will be at all times a minimum.

This feature of self-adjustment permits of the employment of longer bearings, which reduces the wear, as well as the friction, and by providing sufficient bearing and wearing area, enables the bearings to be composed of cast iron, which is the cheapest as well as the very best material of which a bearing can be made, provided that its area of bore is sufficiently large in proportion to

* From *The American Machinist.*

the duty, or load, to have a pressure of not more than about 60 lbs. per square inch of area.

Again, if the alignment of the shaft should require readjustment from the warping or sinking of beams, as is a very common occurrence where hangers are fixed to the joists of ceilings, the adjustment is readily and easily effected by means of the plungers, nor need the boxes be fitted to the shaft more than to see that when

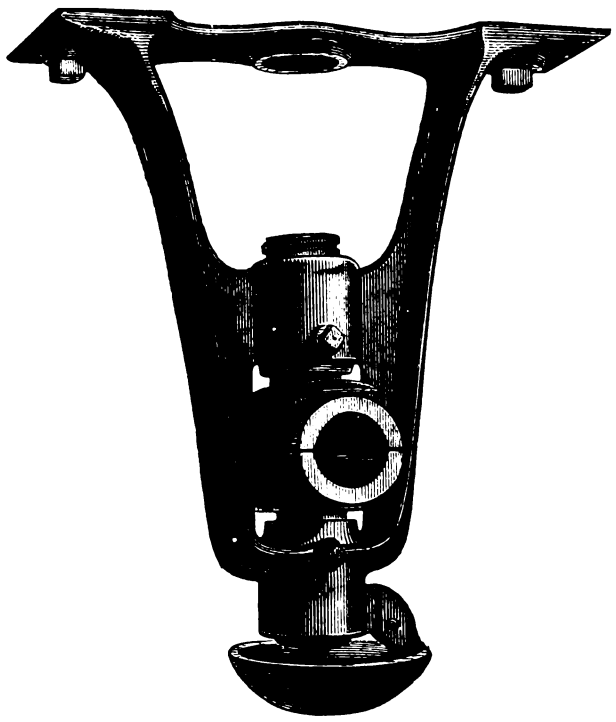

Fig. 2600.

free from the hangers they bed firmly down until the crowns of their bore have contact with the shaft. The hangers themselves require no refinement of alignment, because that may be secured by means of the plungers, and the boxes require no fitting to the shafts after the hangers are erected.

In hangers in which the self-adjusting ball-and-socket feature

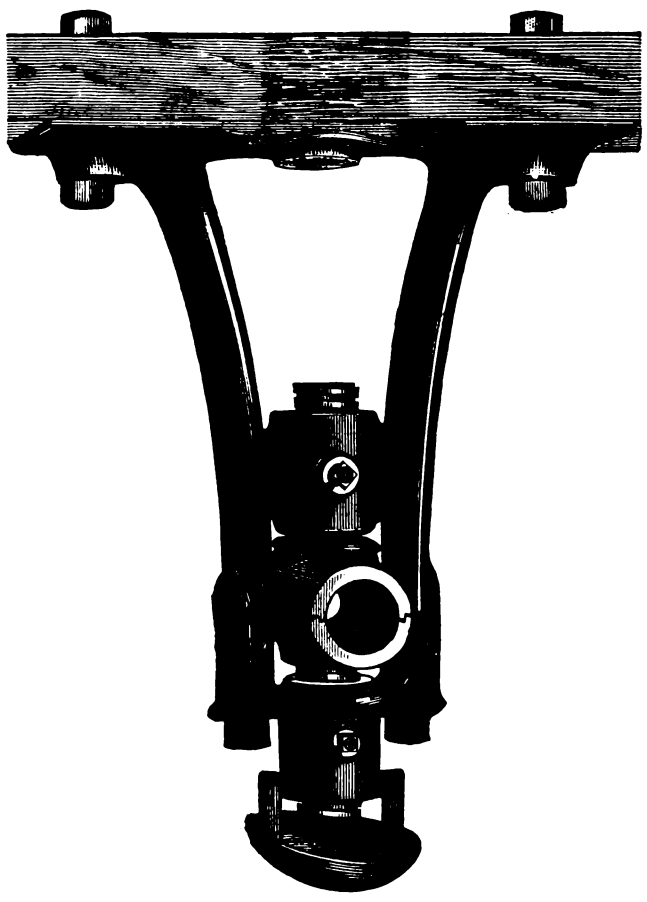

Fig. 2601.

is omitted, the bottom hangers must not only be accurately aligned, but the boxes must, to avoid friction and undue wear, all be fitted to the shaft, and the latter must, during such fitting, be tried in the boxes; the operation, if properly performed, costing far more in labor than is equivalent to the difference in the first cost of the ball-and-socket adjustable hangers and those solid or not self-adjustable, especially if the boxes be long ones, as about, or not less than, three times the diameter of the shaft, as they should be.

An external side elevation of this hanger is shown in Fig. 2600,

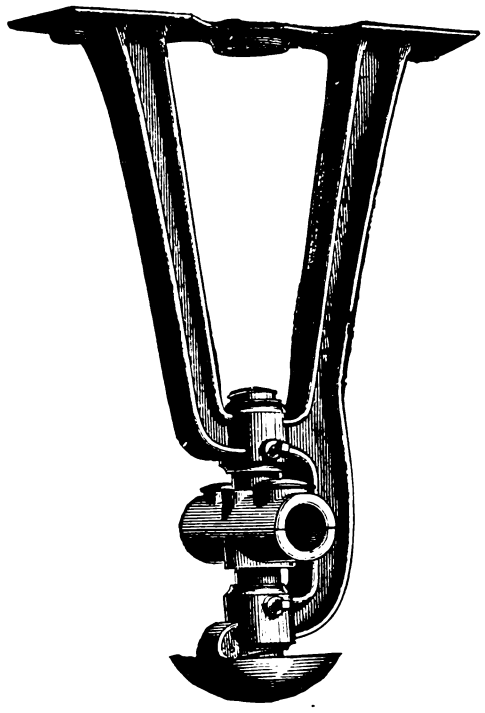

Fig. 2602.

it being obvious that the hanger is designed for bolting to timbers, or framing overhead.

Fig. 2601 represents a hanger of this class. In this the lower part carrying the bottom bearing is held to the upper by two bolts, as shown, the object being to enable the same to be placed in position on a line of shafting without disturbing the pulleys or the couplings. The lower section with the bottom bearing is removed and again put on after the hanger is set over the shaft.

Fig. 2602 represents an open-sided ball-and-socket hanger in which the plungers can be retired, the bearings removed, and the hanger erected on an existing line of shafting without

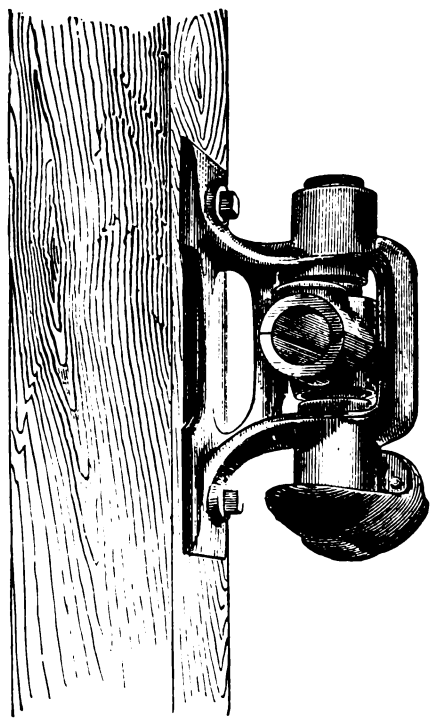

Fig. 2603.

removing the pulleys or couplings, or disturbing the line of shafting.

When the face of the framing to which the hangers are to be bolted stands vertical, the hangers are formed as in Fig. 2603, in which the ball-and-socket or swivelling feature is maintained as before.

Fig. 2604 represents a wall hanger, which is open in front

similar to the hanger shown in Fig. 2602, and for the same purpose.

The section of shafting receiving power from the engine or prime mover is usually supported in bearings or pillow blocks.

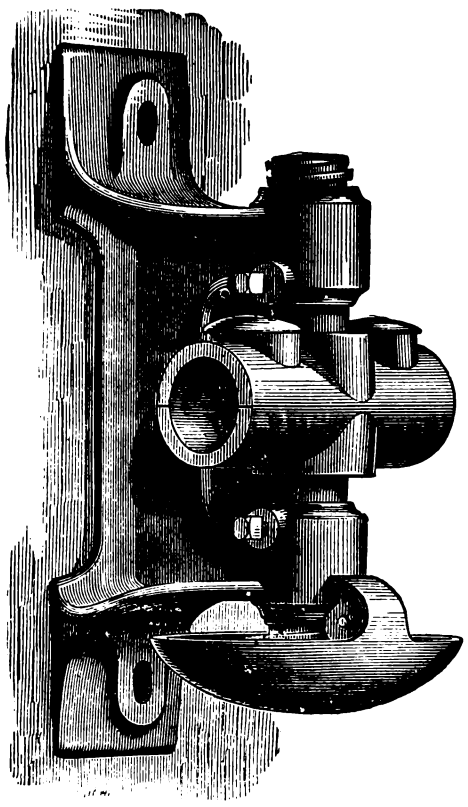

Fig. 2604.

Pillow blocks are also used for vertical shafts, and in cases where the foundation or framing is not liable to lose correct horizontal adjustment.

Fig. 2605 represents a pillow block, in which the ball-and-socket principle shown in Fig. 2602 is embodied. The bearings

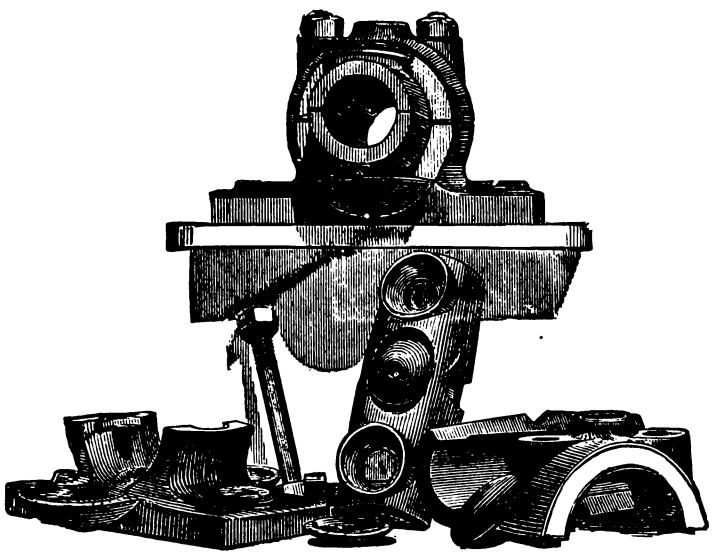

Fig. 2605.

have each a ball section fitting into spherical recesses or cups provided in the body of the block, and in the cap, so that the bearings are capable of swivelling as already described with reference to the hanger Fig. 2599.

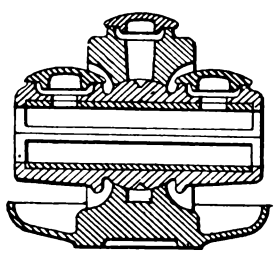

Fig. 2606.

A sectional view of a pillow block having this adjustable feature is shown in Fig. 2606. To provide increased seating bearing, and also means of side adjustment to pillow blocks, they are sometimes bolted to base plates as in Fig. 2607, room being left in the bolt holes to permit of their being moved and adjusted upon the plate. The adjustment may be made by means of wedges, as at A, B in Fig. 2607. These base plates are usually employed when the pillow block is to be held against a wall.

An inverted pillow block of similar construction, but designed for the head line (as the length receiving power from the engine

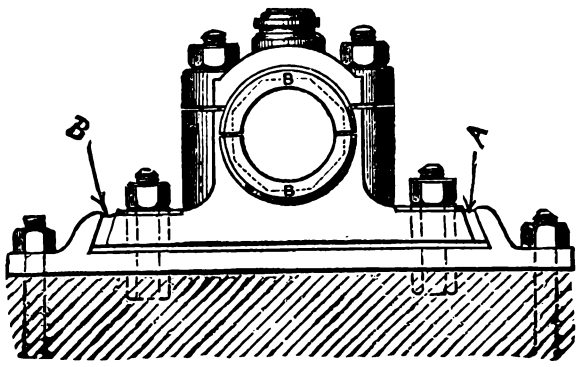

Fig. 2607.

or motor is termed) of the shafting, is shown in Fig. 2608, but an improved form of the same has plungers so as to effect a vertical adjustment of the bearings.

When a pillow block requires to be enveloped by a wall it is provided with a wall box as shown in Fig. 2609, and within this box is set the pillow block as shown, space being sometimes left

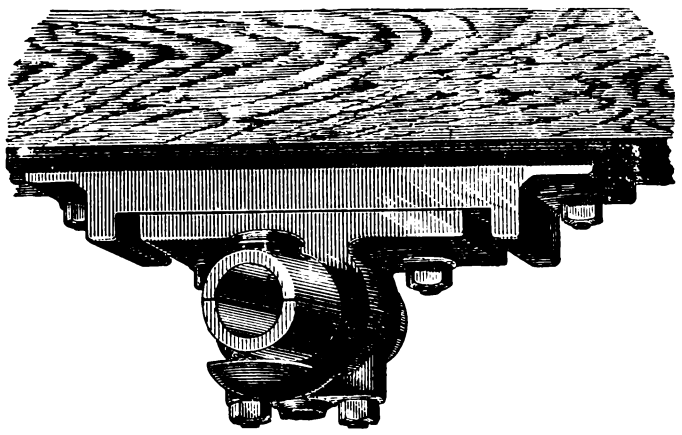

Fig. 2608.

to adjust the pillow block laterally within the box by means of a wedge as shown.

In cases where the shafting requires to stand off from a wall to allow room for the pulleys, brackets or knees, such as shown in Fig. 2610, are employed.

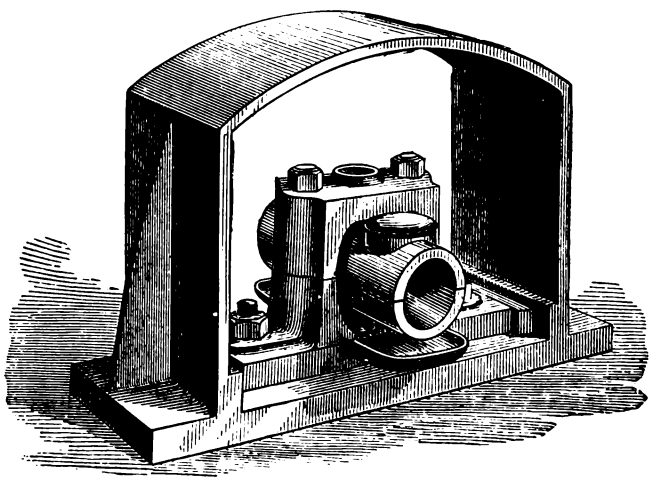

Fig. 2609.

COUPLINGS FOR LINE OR DRIVING SHAFTS.—The couplings for connecting the ends of line shafts should accomplish the following objects :—

1. To hold the two shaft ends axially true one with the other.
2. To have an equal grip along the entire length of shaft enveloped by the coupling.
3. To have a fastening or locking device of such a nature that

it will not be liable to work loose from the torsional strains due to the flexure of the shaft, which is caused by the belts springing or straining the axial line of shafting out of the straight line.

4. To be capable of easy application and removal, so as to permit the erection or disconnection of the lengths of shafting

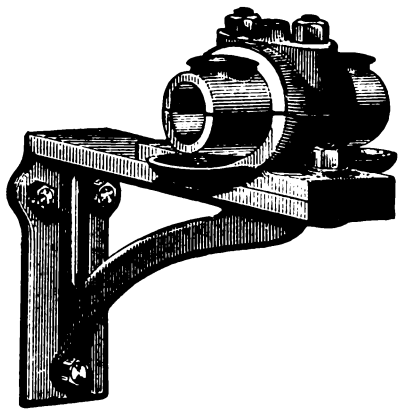

Fig. 2610.

with as little disarrangement of the hangers and bearings as possible, and to be light, run true, and be balanced.

To these requirements, however, may be added that, since it is well-nigh impracticable to obtain lengths of lathe-turned shafting of exactly equal diameter, couplings for such shafting require to fill the following further requirements :

5. The piece or pieces gripping the shaft ends must be capable of concentric and parallel closure along the entire area, enveloping the end of each shaft, and must do this at each end independently of the other, and the piece or pieces exerting the closing or compressing pressure must grip the closing piece or pieces, enveloping the shafting over the entire area.

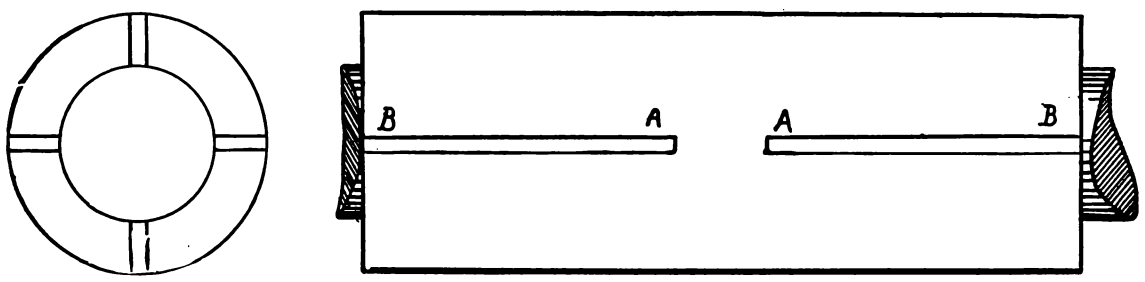

Fig. 2611.

If, for example, a sleeve be split at four equidistant parts of its circumference, and from each end nearly to the middle of its length, as in Fig. 2611, any pressure that may be applied to its circumference to cause it to grip the shaft it envelops will cause it to grip the shaft with greater force at one part than at

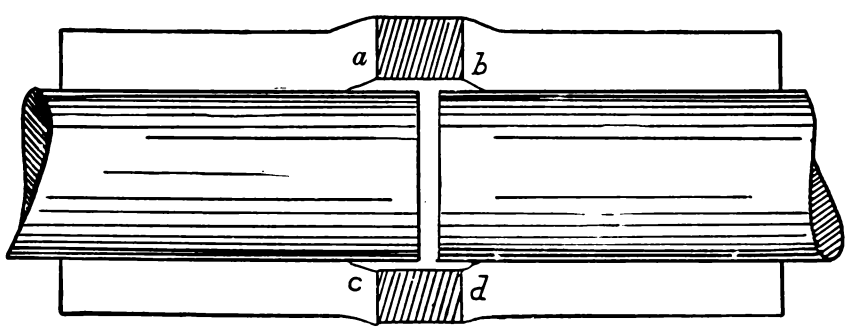

Fig. 2612.

another, according to the diameter of the shaft and the location of the external pressure. Thus, if the pressure be applied equally along the length A B, the weaker end B will close most readily, while at A the support afforded by the unsplit section offers a resistance to closure at the ends A of the split, hence the shaft, even though a working fit to the sleeve bore, will be gripped with least force at the end A. If the shaft were simply a close fit, as, say, just movable by hand on the sleeve bore, the form of the coupling bore would, when compressed upon the shaft, be as shown in Fig. 2612, the bend on the necks *a,b,c,d*, being magnified for clearness of illustration. If the compressing piece covered the compressed sleeve for a lesser distance, the grip would be more uniform, because there would be a greater length of the sleeve to afford the curves *a,b,c,d*, as shown in Fig. 2613. The grip may be more equalised by boring the sleeve of slightly smaller diameter than the shaft.

Fig. 2614 represents a sleeve carrying out this principle. It is composed of two halves, as shown, bored slightly smaller than the shaft diameter, and is to be compressed on the shaft, which, acting as a wedge, would spring open the sides of the bore until the crown of the bore bedded against the shaft. This, in the case of parallel shaft ends of equal diameter, would hold them with great

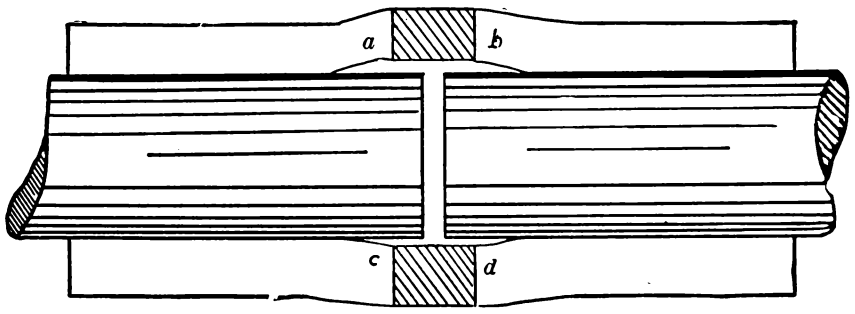

Fig. 2613.

force axially true, and with equal force and bearing, thus meeting all the requirements. If, however, the end of one shaft were of larger diameter than the end of the other (as has hitherto been supposed to be the case), the end accomplished by boring the sleeve of smaller diameter than the shaft is, that the end of the sleeve is afforded the extra elasticity due to the transverse spring of the sleeve, which permits the edges of each half of the sleeve to bear along a greater length of the shaft end than would otherwise be the case ; but the bearing is in this case mainly at and near the edges of the split.

It will be perceived, then, that under this principle of construction, when applied to shaft ends of varying diameters, the metal is left to spring and conform itself to the shape of the parts to be connected, and that there is nothing outside of the condition of relative diameter of shaft to sleeve bore to determine what the direction of the spring or closure of sleeve shall be ; but, on the other hand, the principle possesses excellence in that the sleeve being cylindrical and its closure taking place equally at similar points of contact the shafts will be held axially true, one with the other ; or in other words, the movements of the metal while sleeve

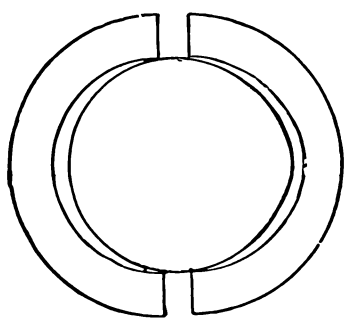

Fig. 2614.

closure is progressing are equally radial to the axis of the sleeve, and there is no element tending to throw the shaft axis out of line one with the other.

If a sleeve have a single split, the manner in which it will grip a shaft smaller than the sleeve's bore depends upon the manner in which the compression is effected.

In Fig. 2615, for example, is a ring supposed to be compressed by a pressure applied at A and at B, causing the ring to assume

the form shown by the dotted lines. The centre of the ring bore would therefore be moved from C to D. Now, suppose that the end of one section of shafting were to fit the sleeve bore, then compressing the sleeve upon it would not practically move the centre of the bore; but if the shaft at the other end of the sleeve were smaller than the sleeve bore, the compression of the sleeve to grip the shaft would move the centre of the bore, and, therefore, of the shaft towards D, hence the axial lines of the shafts would

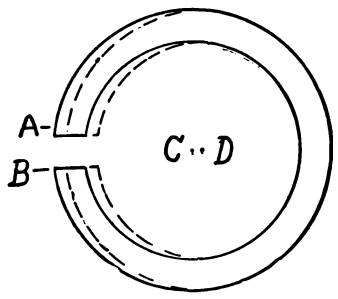

Fig. 2615.

not be held true one with the other. To accomplish this latter object, the compression must be equal all round the sleeve, or it may be applied at the points E and F, Fig. 2616, although it is better to have the compression area embrace all the circumferential area possible of the sleeve, and to have the movement that effects the compression simultaneous and equal at all points on the circumference of the ring or sleeve, because if these movements are independent, more movement or compression may be given at one point than at another, and this alters the centre of the bore; thus, if more pressure were exerted at E than at F, in figure, the centre of the bore would be thrown towards F, or *vice versâ*. If the

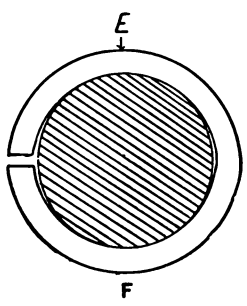

Fig. 2616.

pressure be concentric, the single split ring or sleeve grips the shaft all round its circumference; hence it is only necessary in this case to maintain the circumference of the sleeve in line to insure that the shaft ends be held axially true one with the other; and if the pressure on the ring be applied equally from end to end its closure will also be parallel and equal, and the shaft will be held with equal force along that part of its length enveloped by the coupling. It is obvious, however, that the piece or sleeve gripping the end of one shaft must be independent of that gripping

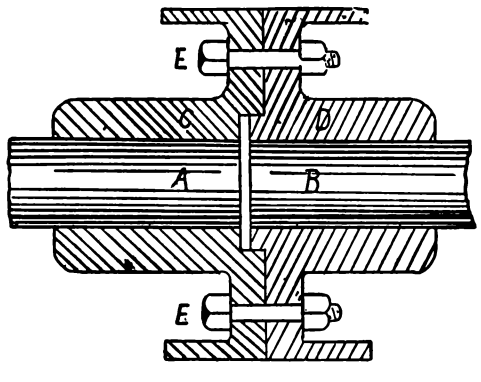

Fig. 2617.

the other, so as to avoid the evils shown in Fig. 2612, while at the same time the casing or guide enveloping the two independent rings or sleeves must guide and hold them axially true, one with the other.

In Fig. 2617 is shown an excellent form of *plate coupling*, in which most of the requirements are obtained. A and B are the ends of the two lengths of shafting to be connected, C and D are the two halves of the coupling driven or forced on the ends of the shafting, and further secured by keys. The end of one half fits into a recess provided on the other half, so as to act as a guide to keep the shafts axially true one with the other, and also to keep the two halves true one with the other, while drilling the holes to receive the bolts E which bolt the coupling together. The objections to this form are, that it is costly to make, inasmuch as truth cannot be assured unless each half coupling is fitted and keyed to the shaft, and turned on the radial or joint faces afterwards. Furthermore, if the coupling were taken off in order to get a solid pulley on the shaft, the coupling is apt to be out of true when put together again, and, therefore, to spring the shaft out of true. Also, that the bearing, support, or hanger must be open-sided to

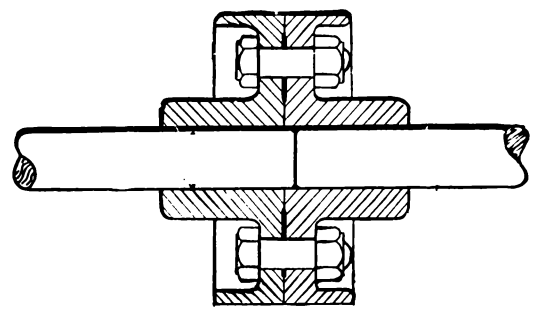

Fig. 2618.

admit the shaft, and that each coupling, being fitted and turned to its place, would be apt to run out of true if removed and applied to another shaft, whether the same be of equal diameter or not; but if each half coupling be provided with a feather instead of the usual key, the coupling may be readily removed and will remain true when put on again.

Fig. 2618 represents a plate coupling, in which one end of the shaft passes into the bore of the half coupling on the other length of shaft, which serves to keep the shafts in line one with the other.

Fig. 2619 represents a single cone coupling composed of an external sleeve having a conical bore and a split internal sleeve

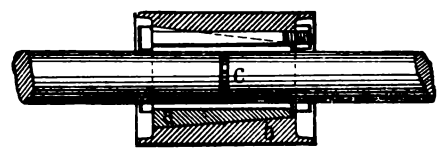

Fig. 2619.

bored to receive the shaft, and turned on its outer diameter to the same cone as the bore of the outer or encasing sleeve. The bolts pass through the inner sleeve, the bolt head meeting the radial face of the inner sleeve while the nut meets the radial face of the outer sleeve, so that screwing up the nut forces the inner sleeve into the outer and closes the bore of the former upon the shaft. This coupling is open to the objection that it cannot grip the ends of the shafts equally unless both shafts be of exactly equal diameter, and the bearing on the smaller shaft will be mainly at the outer end only, as explained in Fig. 2611. As a result, the

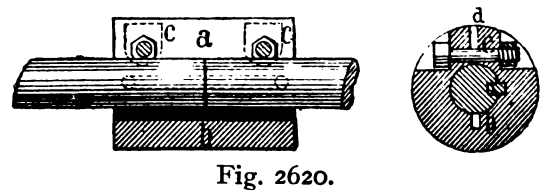

Fig. 2620.

transverse strains on the shaft will cause the couplings to come loose in time.

Fig. 2620 represents a coupling composed of a cylindrical sleeve split longitudinally on one side, as at *d*; the bolts *c* pass through the split. Diametrally opposite is another split passing partly through as at *b*. A key is employed at right angles to the two splits as shown. Here, again, the pressure on a shaft that is smaller than the other, of the two shafts coupled, will be mainly at one end, but separation of the shaft ends is provided against by means of two cylindrical pins on the ends of the key fitting into corresponding holes drilled in the shaft, as shown in the side elevation in the figure.

In Fig. 2621 is shown a coupling whose parts are shown in Fig. 2622. It consists of a cylindrical ring turned true on the outside and bored conical from each end to the middle of its length, as shown. The split cones are bored to receive the shaft and contain a keyway to receive a spline provided in the shaft ends, and are turned on the external diameter to fit the conical borings in the sleeve. Three square bolts pass through the split cones, which, being square, are prevented from rotating while their nuts are being screwed up.

To put the coupling together one split cone is passed over the end of one shaft and the other over that of the other. The sleeve is then put between the ends of the shaft, the position of the shaft adjusted for length and the split cones pushed up into the sleeve; the bolts are then passed through and screwed up. The forcing of the split cones into the conical borings of the sleeve causes the former (from being split) to close upon the shaft ends and grip them equally tight, notwithstanding any slight difference in the diameters of the shaft, there being left between the ends of the split cones sufficient space to allow them to pass through the

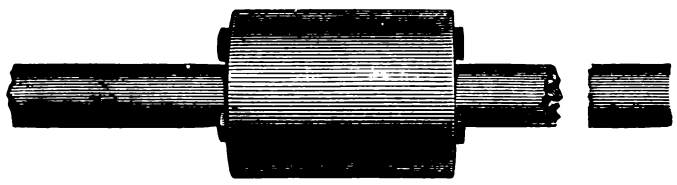

Fig. 2621.

conical borings sufficiently to close upon the respective ends of the shafts; the pressure being parallel and equal on each shaft end, because when the cone has gripped the largest shaft the whole movement due to screwing up the nuts is transferred to the cone enveloping the smaller shaft, and by reason of the cones fitting, the closure of the holes in the cones is parallel, giving an even grip along the shaft end and an equal amount of grip to each shaft end.

To remove the coupling the bolts are removed, and the sleeve being moved endways the cones open from their spring and relieve the grip upon the shaft.

It is evident that in their passage through the sleeve casing the cones will move with their axial lines true with the axial line of the casing; and it is equally evident that the taper on the cone accurately fitting the taper in the sleeve bore, the closure of the cone bores must be equal; while at the same time the pressure on the two cones upon the respective shaft ends must be equal, because it is the friction of the cone bores upon the shaft ends

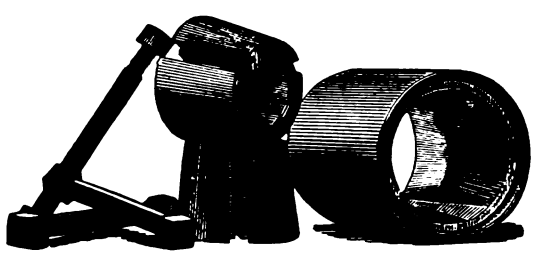

Fig. 2622.

which equally resists the motion of both, while the pressure applied to the respective cones is derived from the same bolts, and hence is equal and simultaneous in its action.

To loosen this coupling for removal the bolts must be stacked back and a few blows on the exterior of the outer shell with a billet of wood may loosen the coupling; but if not, a wedge or a cold chisel may be driven in the splits of the cones to loosen them, but such wedge or chisel should not have contact with the sides of the split, either near the bore or near the perimeter, for fear of raising a burr.

In Fig. 2623 is shown a patent internal clamp coupling. It is formed of a cylindrical piece containing a pair of separate clamps, and between these clamps and the outer casing are four screws, two to each clamp; these screws are tapered so as to close the clamp when screwed up and release it when screwed outwards. The holes to receive the shaft ends are bored somewhat smaller than the shafts they are to fit, and the clamps opened to permit the easy insertion of the shaft ends by means of wedges A driven in the split B of each clamp, as shown in Fig. 2624.

The lower edge of the wedges should be slightly above the bore of the clamp to prevent the formation of a burr or projection of metal when the wedge is driven in. When placed upon the shaft ends and in proper position the wedges are removed and the clamp bore will have contact at and near the edges of the longitudinal split and on the opposite sides of the bore where the keyway is shown, but the pressure of the tape screws will spring the clamps on the side of the longitudinal splits, and increase the bearing area at those points.

The main features of this device are that though the bore be made a driving fit to the shaft, it can, by the employment of the

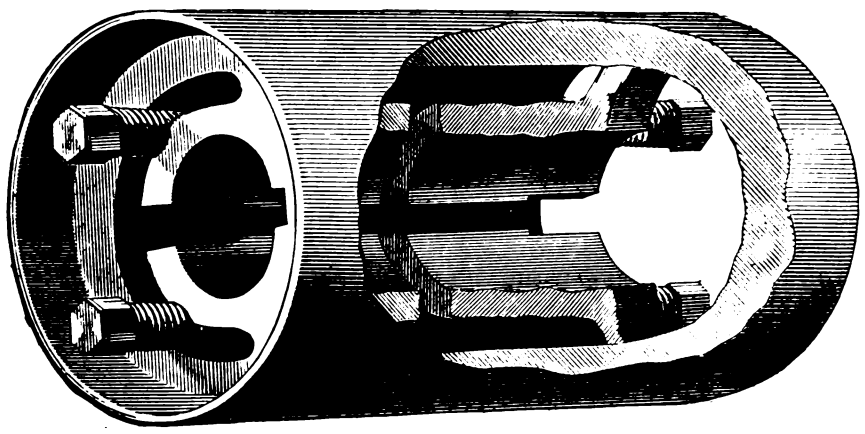

Fig. 2623.

wedges, be put on the shaft with the same ease as if it were an easy fit, while the clamps being separated by a transverse groove may open and close upon the shaft independently of each other, so as to conform separately to any variation in the diameters of the two shaft ends it couples. But it may be noted that since the circumference of each shaft end has a bearing along the line of the coupling bore diametrally opposite to the longitudinal splits, the shafts will not be held quite axially true one with the other unless there be as much difference in the diameters of the separate clamp bores as there is in the diameters of the shaft ends; because to hold two shafts of different diameters axially true one with the other the longitudinal planes of the two circumferences must not at any part of the circumferences form a straight line, as would be the case at that part of the coupling bore at and near the keyway.

It is to be noted, however, that this coupling is formed of one solid piece, and that the strain on the tightening bolts or screws is one of compression only, which tends to hold them firmly and prevent their coming loose.

If the workmanship of a plate coupling, such as in Fig. 2617, be

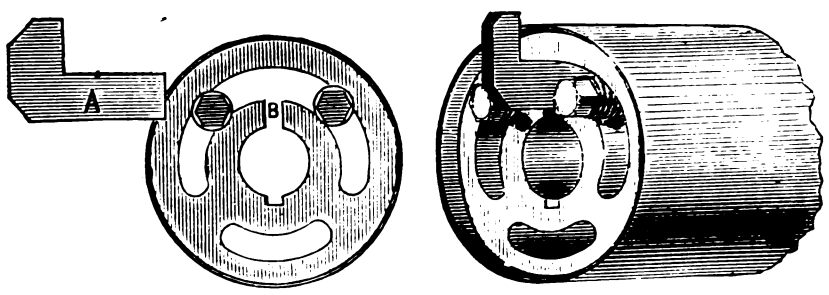

Fig. 2624.

accurately and well done, and the proportions of the same are of correct design, so that the strain placed on the same in keying and coupling it up does not distort it, the coupling and the shaft will run true, because the strain due to the key pressure will not be (if properly driven) sufficient to throw the coupling out of true. But the degree of accuracy in workmanship necessary to attain this end is greater than can be given to the work and compete in the market with work less accurately made, because the difference in the quality of the workmanship will not be discernible save to the most expert and experienced mechanic, and not to him even unless the pieces be taken apart for examination. If the bore of the coupling be true and smooth and of proper fit to the shaft the

key pressure, if the key fits on its top and bottom, will not, as stated, be sufficient to throw the coupling out of true. It is true, however, that such pressure is exerted on one half the bore *of the coupling* only, being the half bore opposite to the key. On the other diametral side of the coupling the strain due to the key is exerted on the top face of the key.

If, therefore, the key seats in the shaft and in the couplings are in line or parallel, and both therefore in the same plane, the strain due to the key may throw the coupling out of true to the amount that the key pressure may relieve the bore of the coupling (on the half circumference of the shaft of which the key is the

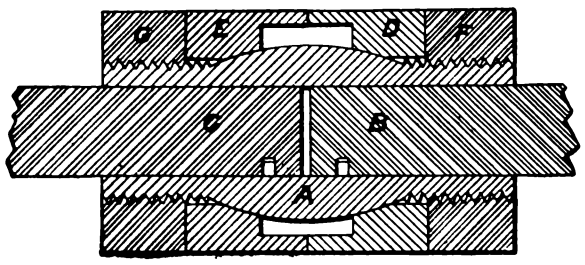

Fig. 2625.

centre) from contact or pressure with the shaft. As a result, the coupling may run to that extent out of true, but the shaft would run true nevertheless so long as the nature of the surfaces on the shaft and on the coupling bore was such that the key pressure caused no more compression or closer contact in the case of one half coupling than in the case of the other.

It is obvious that a plate coupling will require at least as much force to remove it from the shaft as it took to put it on, and sometimes, from rusting of the keys, &c., it requires more. If it be removed by blows it becomes damaged, and damage is likely to be also caused to the shaft, while the surfaces having to slide in

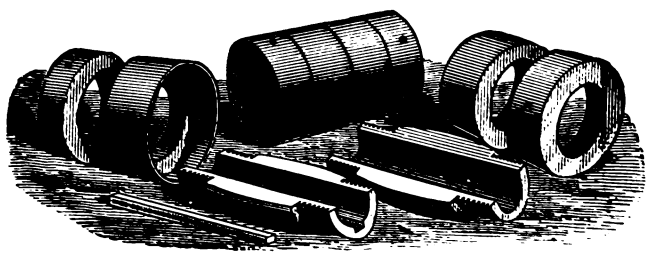

Fig. 2626.

contact under the pressure of the fit the surfaces abrade and compress, and the fit becomes impaired. But in couplings such as shown in Fig. 2621, the gripping pieces are relieved of pressure on the shaft by the removal of the bolts, and the removal of the coupling becomes comparatively easy.

The interchangeability of plate couplings is further destroyed by the fact already stated, that turned shafting is not, as a rule, of accurate gauge diameter, and the least variation in the pressure or fit of the coupling to its shaft is apt to cause a want of truth when the key bears on its top and bottom. The fit of the coupling to its shaft may be, it is true, relied on to do the main part of the driving duty, and the key fitting on the sides only may be a

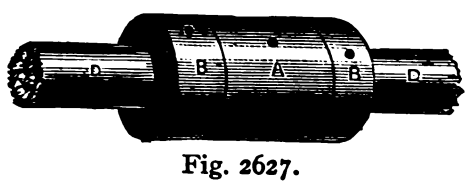

Fig. 2627.

secondary consideration, but in proportion as the fit is relied on to drive, that fit must be tighter, and the difficulty of application and removal is increased.

Another and important disadvantage of the plate coupling in any form is that it necessitates the use of hangers open on one side to admit the shaft, because the couplings must be fitted upon the shaft before the same is erected and should not be removed after being fitted, as would be necessary to slide the end of the shaft through the bearing.

When plate couplings are constructed as in Fig. 2617, the removal of a section involves either the driving back of one-half of the coupling so that the other half will clear it, or else the moving endwise of the whole line to effect the same object.

With a plate coupling the half coupling on one end of the shaft must be removed when it is required to put an additional pulley on the shaft, unless, indeed, a split pulley be used, whereas with a clamp coupling, such as shown in Fig. 2621, the half coupling at each end may be slacked and moved back, one end of the shaft released, a solid pulley placed on the shaft and the coupling replaced, when it will run as true as before, and the pulley may be adjusted to its required position on the length of shafting.

It is to be remarked, however, that a well-made plate coupling, such as in Fig. 2618, makes a good and reliable permanent job that will not come loose under any ordinary or proper conditions.

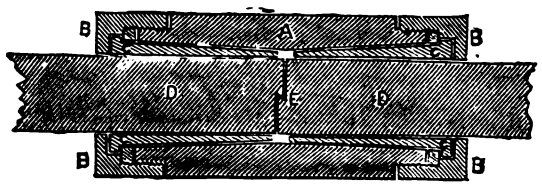

Fig. 2628.

In Fig. 2625 is shown a patent self-adjusting compression clamp, which is peculiarly adapted to connect shafting that is of proper gauge diameter. It consists of a sleeve A made in two halves, each embracing nearly one-half of the shaft circumference and being bored parallel and slightly smaller than the diameter of the shaft ends. Over this sleeve passes at each end a ring D E, bored conical and fitting a similar cone on the external diameter of the sleeve. On each end of the sleeve is the nut F G, which by forcing the cone ring up the taper of the sleeve causes the two halves of the latter to close upon and grip the shaft. For shafts

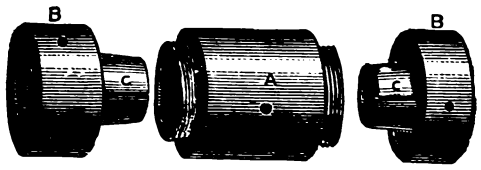

Fig. 2629.

less than two inches in diameter there are provided in the sleeve two pins to enter holes in the shaft ends in place of keys, but for sizes above that keys are employed. All parts of this coupling being cylindrical it is balanced. The separate parts of this coupling are shown in Fig. 2626.

In Figs. 2627 to 2630 are shown a side elevation and sectional view of another form of shaft coupling. A is the sleeve, B B nuts on the ends of the sleeve, and C C cones fitting taper holes in the sleeve. These cones are split, as shown in Fig. 2629, to permit them to close upon the shaft ends. The shaft ends themselves are

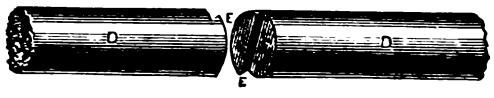

Fig. 2630.

matched with a half dovetail, as in Fig. 2630, which dispenses with the employment of a key.

In coupling shafts of different diameters it is usual to reduce the diameter of the end of the larger to that of the smaller shaft, and to employ a size of coupling suitable for the smaller shaft; but in this case it is necessary that the coupling be placed on the same side of the hanger or bearing as the smaller shaft, otherwise it is obvious that the strength of the larger would, between its bearings, be reduced to that of the smaller shaft.

The couplings for line shafting are usually placed as near to the bearings or hangers as will leave room for the removal of the couplings by sliding them along the shaft.

The couplings on the length of shaft receiving power from the motor are placed outside the bearings, hence on the succeeding lengths there will be one coupling between each pair of bearings, the couplings being in each case as close to each bearing as will allow the coupling to be moved towards the bearing sufficiently to

permit the length to be removed without disconnecting the adjacent length from its bearings.

Fig. 2631 represents a very superior form of coupling for line shafts. The ends of the line shaft are reduced to half diameters

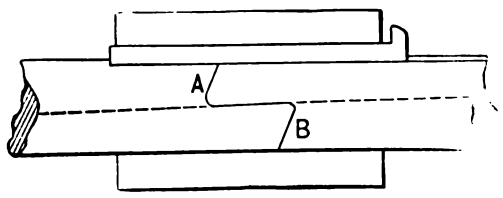

Fig. 2631.

as shown, and lapped with a horizontal joint at an angle to the axis of the shaft as denoted by the dotted line, which prevents end motion; the ends of the shaft and their abutting surfaces are dove-

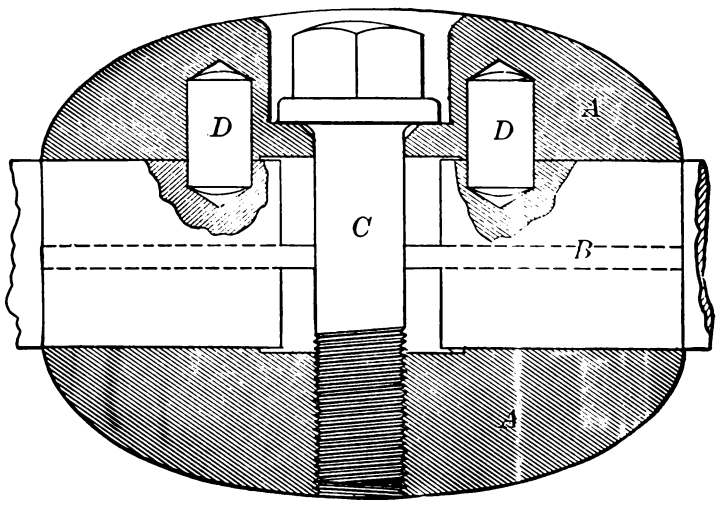

Fig. 2632.

tailed, as shown A and B, and, therefore, perform driving duty. A sleeve envelops the whole joint and is secured by a key. This coupling accomplishes all that can be desired, but requires very accurate workmanship, and on this account is expensive to make.

Fig. 2632 represents a form of coupling suitable for light shafting. It consists of two halves A A, of cast iron, which are drawn together by the bolt C; the centre of the coupling is recessed to enable the coupling to take a better hold on the shaft, which is prevented turning by the pins D D. This coupling has no projections to catch clothes or belts, and is quickly applied or removed.

Fig. 2633* represents a form of coupling for heavy duty, the transmitting capacity only being limited by the strength of the projections A. If the shafts are not axially in line, this form of coupling accommodates the error, since the projections A may slide in their recesses, while if the axial lines of the shafts should

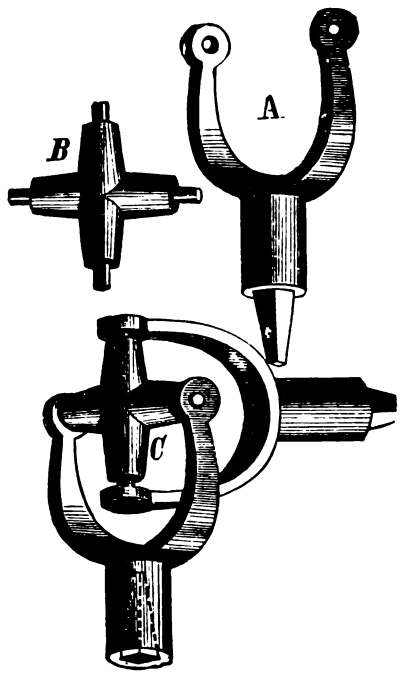

Fig. 2634.

vary from flexure of the bearings or foundations, as in steamships, clearance between the ends of A and the bottom of the recesses may be allowed, as shown at B.

In Fig. 2634 is shown a coupling (commonly known as the universal joint coupling) which will transmit motion either in a straight line, or at any angle up to 45°.

It is formed of two double eyes, such as A, connected to a yoke or crosspiece B as shown at C. It is mainly used for connecting shafts or arms carrying tools of some kind, such as rubbers for polishing stone, tools for boring, or other similar purposes in which the tool requires to be rotated at varying angles with the driving shaft.

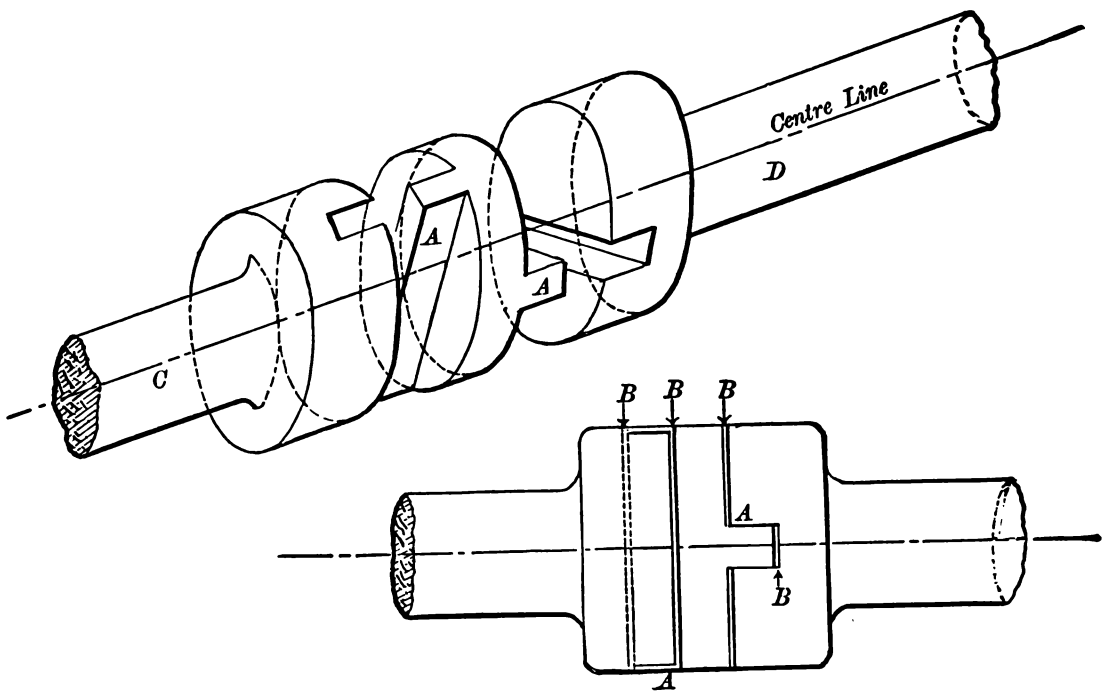

Fig. 2633.

* From Rankine's "Machinery and Millwork."

CHAPTER XXXI.—PULLEYS.

PULLEYS for the transmission of power by belt may be divided into two principal classes, the solid and the split pulley. The former is either cast in one entire piece, or the hub and arms are in one casting, and the rim a wrought-iron band riveted on. The latter is cast in two halves so that they may be the more readily placed upon or removed from the shaft.

On account of the shrinkage strains in large pulley castings rendering them liable to break, it is usual to cast pulleys of more than about 6 feet in halves or parts which are bolted together to form the full pulley. On account of these same shrinkage strains it was formerly considered necessary to cast even small pulleys with curved arms, so that the strains might be accommodated or expended in bending or straightening the curves of the respective arms. It is found, however, that by properly proportioning the amount of metal in the hub, arms, and rim of the pulley, straight arm pulleys may be cast to be as strong as those with curved arms, and being lighter they are preferable, as causing less friction on the shafting journals, and, therefore, being easier to drive.

It is obvious that a pulley for a double belt requires to be stronger than is necessary for a single one, but the difference is not sufficiently great to give any practical advantage by making separate pulleys for single and double belts; hence all pulleys are made strong enough for double belts.

Pulleys are weaker in proportion to their duty as the speed at which they rotate is increased, because the centrifugal force generated by the rotation acts in a direction to burst the pulley asunder, so that if the speed of rotation be continuously increased a point will ultimately be reached at which the centrifugal force generated will be sufficient to cause the wheel to burst asunder. But the

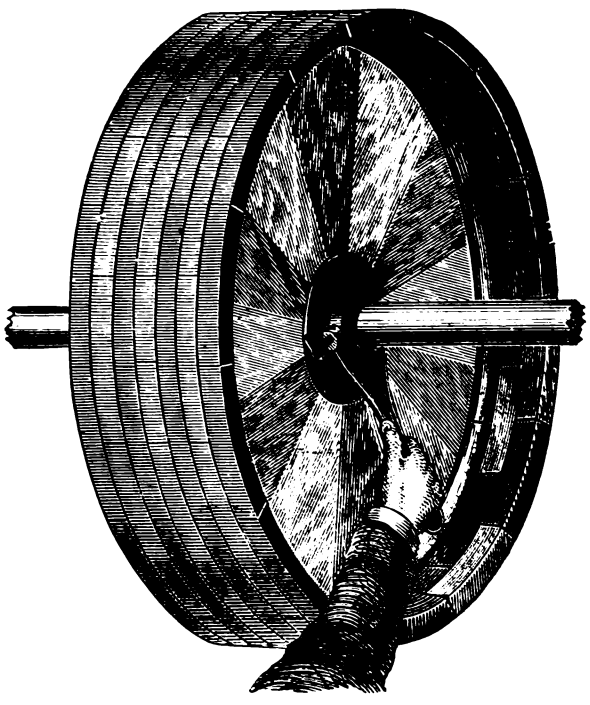

Fig. 2640.

speed at which pulleys are usually run is so far within the limits of the pulley's strength, that the element of centrifugal force is of no practical importance except in the case of very large pulleys, and even then may be disregarded provided that the pulleys be made in a sufficient number of pieces to avoid undue shrinkage strains in the castings, but if solid pulleys are rotated at high velocities the internal strains due to unequal cooling in the mould has been known to cause the wheels to fly asunder when under high speeds.

Fig. 2635 represents a solid pulley, the tapered arms meeting the rim in a slightly rounded corner or fillet, and the rim being thickened at and towards its centre. When the width of rim is excessive in proportion to one set of arms a double set is employed as in Fig. 2636.

In some forms of pulley the arms and hub are cast in one piece and the rim is formed of a band of wrought iron riveted to the arms. By this means shrinkage strains are eliminated and a strong and light pulley is obtained.

Fig. 2637 represents a split pulley in which the two halves are bolted together after being placed on the shaft.

Variable motion may be transmitted by means of an oval driving pulley, as in Fig. 2638, it being obvious that the belt velocity will vary

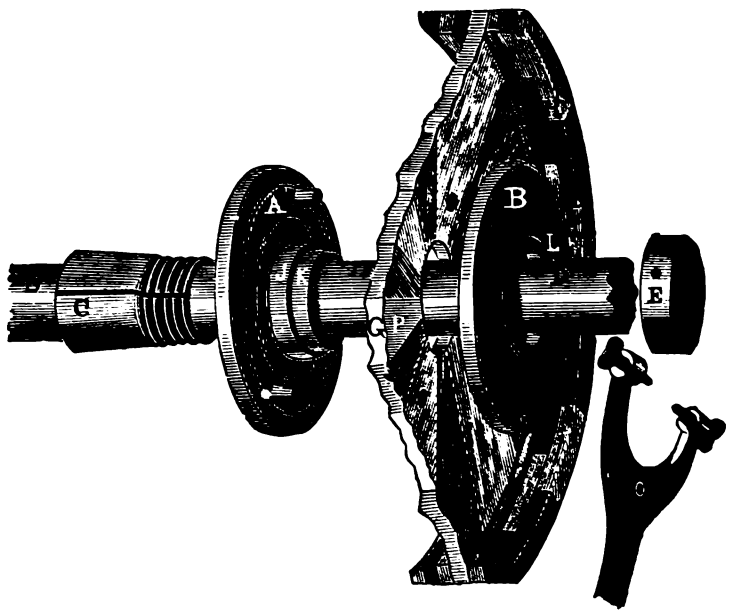

Fig. 2641.

according to the position of the major axis of the oval. Arrangements of this kind, however, are rarely met with in practice.

In Fig. 2639 is shown an expanding pulley largely employed on the drying cylinders of paper machinery, and in other similar situations where frequent small changes of revolution speed is required. Each arm of the wheel carries a segment of the rim, and is moved radially to increase or diminish the rim diameter by sliding in slots provided in the hub of the wheel, a radial screw operated by bevel gears receiving motion from the hand wheel and gear-wheels shown in the engraving. It is obvious that in this case the driving belt must be made long enough to embrace the pulley when expanded to its maximum diameter, the slack of the belt due to reduction of diameter being taken up by a belt tightener.

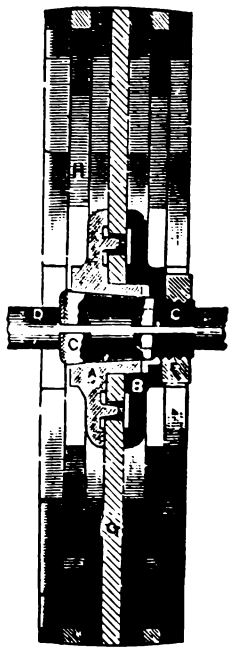

Fig. 2642.

In Fig. 2640 is shown a wooden pulley having a continuous web or disk instead of arms. It is built up of segments, the web being secured to the shaft as follows. In Figs. 2641 and 2642 A,B are clamping plates, and C a split sleeve fitting easily to the shaft and passing through A,B, while receiving the nut E on the other side. The web of the pulley fits on the shoulder J, and the flange B fits on the shoulder K, so as to keep these parts true or concentric to A. The bore of A is taper to fit the taper of C; hence the nut E in drawing C through A, causes C to close upon and grip the shaft, while the flanges A,B grip the pulley and hold it to C.

In Figs. 2643 and 2644 are represented the Otis self-oiling loose pulley, designed to automatically oil itself upon its starting or stopping.

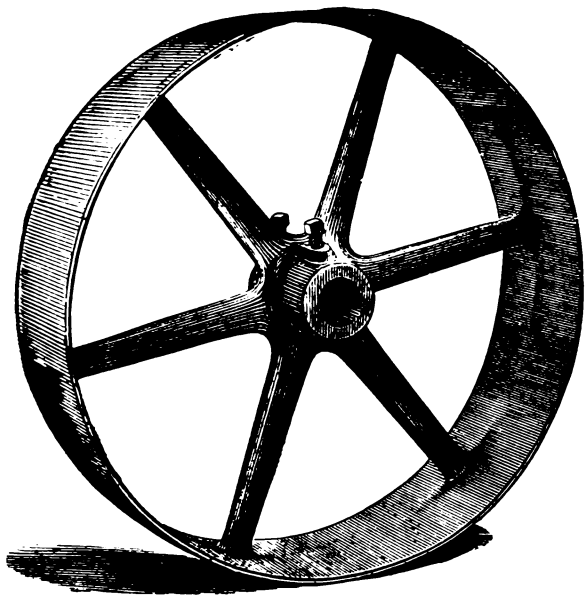

Fig. 2635.

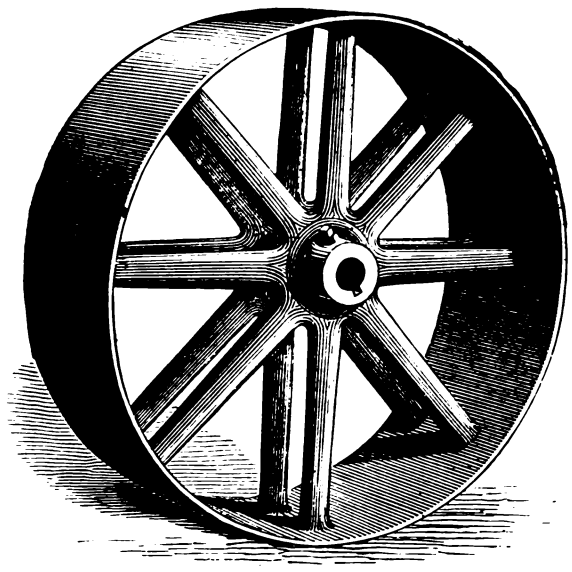

Fig. 2636.

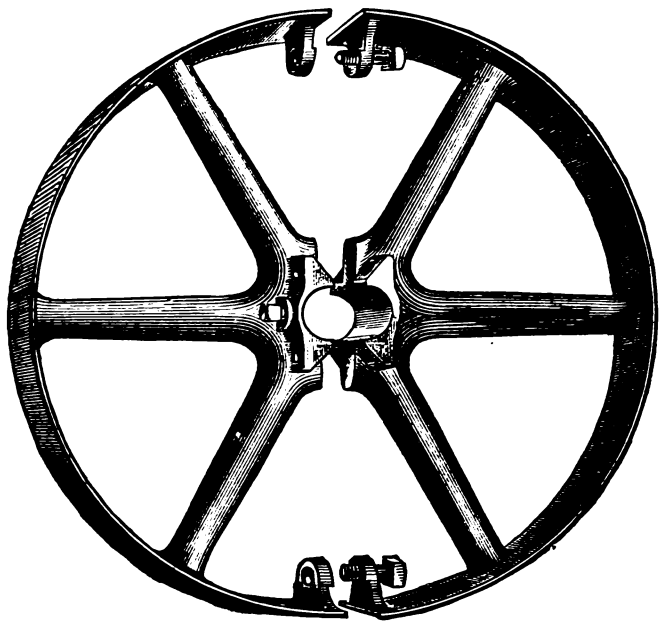

Fig. 2637.

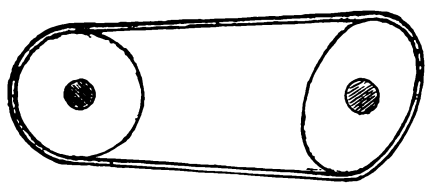

Fig. 2638.

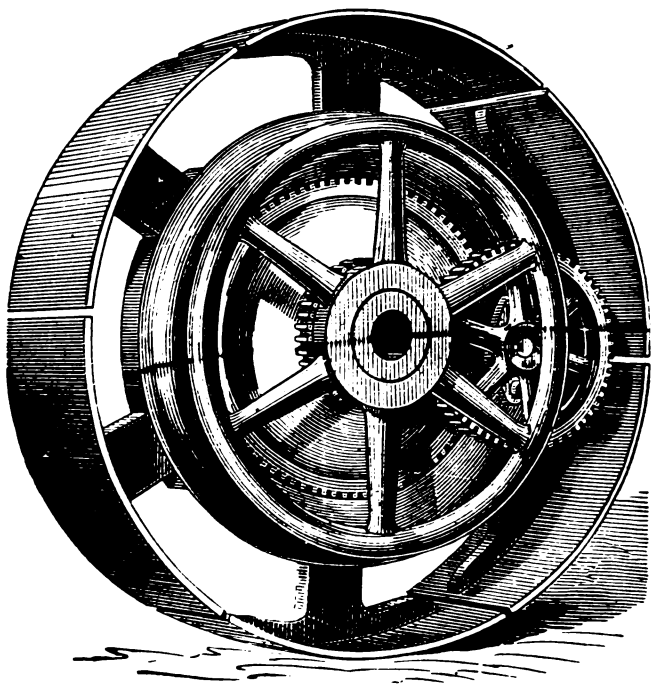

Fig. 2639.

The hub D is cored out in such manner as to form within it an annular chamber or cavity B B, entirely surrounding the bore, and serving as a reservoir to contain oil or other lubricating liquid.

This chamber or reservoir has no direct communication with the bore of the hub, but a communication is formed between it and the bore through one or more chambers C C, which are termed supply chambers, and which are partitioned off within the bore from the reservoir B, by coring the hub in a suitable manner.

These supply chambers have openings N N in their sides or ends communicating with the reservoir B, and also openings C C communicating with the bore of the pulley. These supply chambers are filled with wick or other fibrous or capillary material, which is also inserted into the openings N N, to draw the oil from the reservoir by capillary attraction and supply it in moderate quantities between the bore of the pulley and the shaft on which it runs. Three or more openings are provided in the outer shell of the hub for the introduction of oil into the reservoir B, which openings are closed by thumb-screws, plugs, or other stoppers E E. There being three of these openings, one will always be at or near the top when the pulley is at rest, and through this the oil may be introduced without difficulty. It is not intended that the reservoir

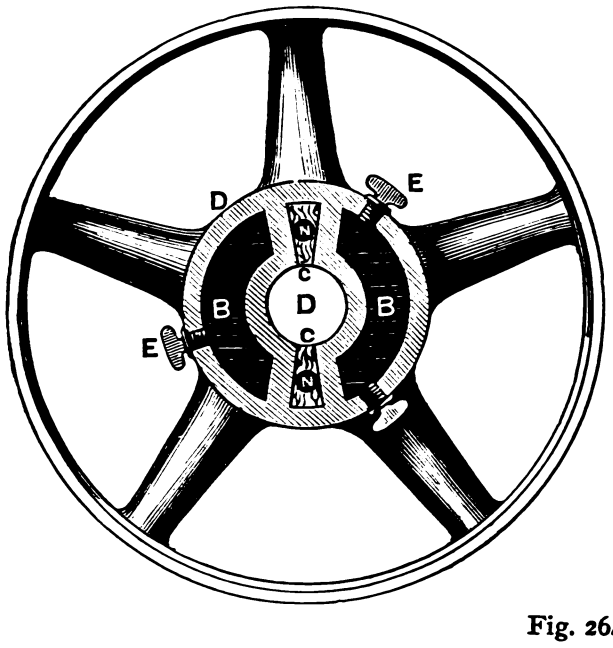

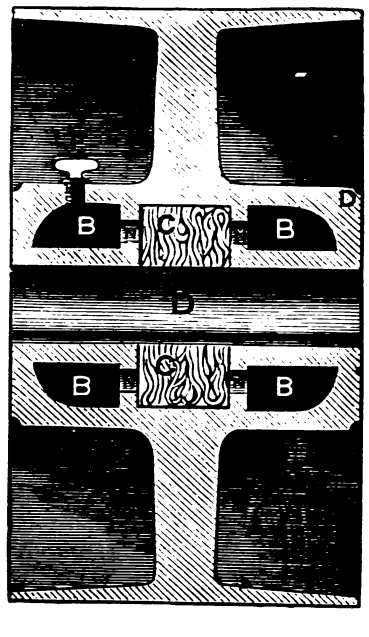

Fig. 2643.

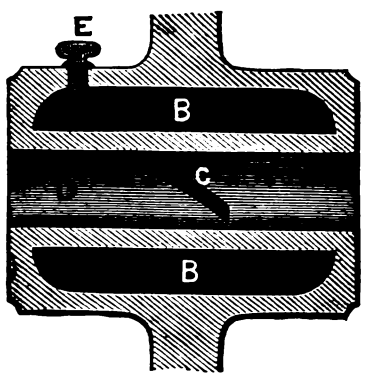

Fig. 2644.

should at any time contain more than one-third its capacity of oil, so that whenever the pulley is at rest the surface of the oil will be below the lowest point of the bore, thus preventing any waste of oil at such times.

When the pulley is in motion, the centrifugal force imparted to the oil in the reservoir throws it outwardly, causing it to be distributed in an even layer against the inner surface of the shell which encloses and forms the reservoir, thus preventing any possible waste when the pulley is in motion.

But when the pulley is either stopped or started, the oil is caused to change its position, and in so doing is brought into contact with the wicks protruding from the small openings N N, by which it is conveyed into the supply chamber, and thence to the shaft. By thus taking advantage of what is a necessity in all business establishments in which machinery is employed—to wit, the stopping and starting of the machinery at regular intervals—to insure the supplying, at such times, of a small quantity of oil to the bearings of the loose pulleys, the makers claim that a perfect and reliable means is obtained for guarding against any needless waste of the lubricant.

A crowning or crowned pulley is of largest diameter in the middle of its width or face, the object being to cause the belt to run on the middle of the pulley width. It would appear that this crowning would give to the belt a greater degree of tension at its centre than at its edges, but it is shown by experiment that if a piece of belt be clamped square across its width at each end and stretched, the centre as section *b*, in Fig. 2645, will stretch the most, and that if the piece be divided along its centre lengthwise, and both halves again stretched, they will again do so the most in the middle of their widths.

From this it appears that the crowning serves to produce a tension equal across the pulley width, because it will stretch the belt the most in the middle of its width, where it has the greatest capacity to stretch.

The amount of crowning employed in practice varies from about $\frac{3}{16}$ to $\frac{3}{8}$ inch per foot of width of pulley face, the minimum being employed where the belt requires to be moved or slipped laterally from one pulley to another of equal diameter, as from a fast to a loose pulley and *vice versâ*. To relieve the belt of strain when on a loose pulley the loose pulley is sometimes made of smallest diameter, and has a coned step up which the belt moves when pressed against it. During this passage of the belt, however, one edge is stretched more than the other, while in passing from the large to the smaller pulley the same edge is under tension, while the other is released from tension; hence, with the belt passing either to or from the large pulley there is a tendency to unduly stretch one of its edges. On the other hand, however, in cases where the belt requires to run for long periods on the loose pulley relieving it from tension is a great advantage.

In fixing pulleys so that they shall run true upon their shafts several difficulties are met with. First, it is difficult to turn the

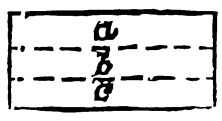

Fig. 2645.

shafts quite parallel and to exact standard gauge diameter. Second, the bore of the pulley must be made a sufficiently easy fit to enable their being moved by hand along the shaft to the required location. As a result the set-screw pressure throws the pulley out of true, unless the mandrel on which the pulley is turned in the lathe be the same diameter as the pulley shaft, and the pulley be held upon the mandrel by the set-screw pressure, and not by driving the mandrel into the pulley bore. In this case two set-screws must be used one on each end of the pulley hub, so as to steady the pulley on the mandrel. A pulley thus trued will still run

out of true when on its shaft unless the shaft be of the same diameter as the mandrel.

One means of obviating this difficulty is to reduce the diameter of the shaft between the pulley seats sufficiently to allow the pulley to pass easily, and to make the pulley bores a driving fit to their seats. This, however, is only practicable in cases where the locations of the pulleys are permanently fixed, and no occasion arises for the addition of new pulleys.

To obviate this difficulty what is termed an internal clamp pulley has been constructed. This pulley is shown in Fig. 2646. The bore is made sufficiently smaller than the shaft diameter

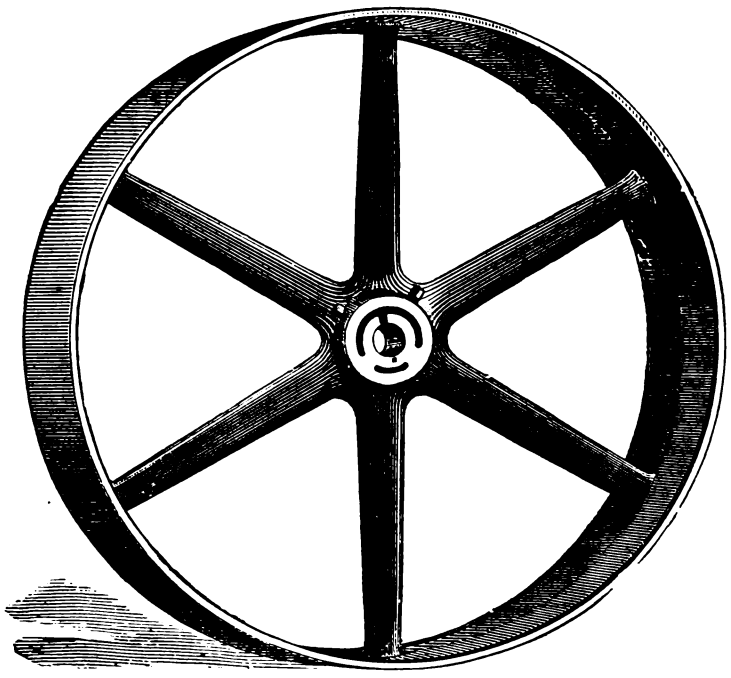

Fig. 2646.

to be a forcing fit. A slot in the form of an arc of a circle is formed in the hub as shown, and a split runs from this arc into the bore. As a result a wedge driven between the walls of the split will spring open the bore and permit its easy passage along the shaft to its required location, when the removal of the wedge will permit the bore to close upon the shaft. To secure the pulley to the shaft four set-screws are employed, two of them being shown in the cut, and the other two being similarly located on the other side of the pulley.

By this means there will be less difference between the diameters of the pulley bore and of the shaft should the latter be slightly less than its standard diameter, and as a result the pulley will run more true.

Split pulleys are bored a tight fit to the shaft when the two halves are bolted firmly together. They may, however, be made

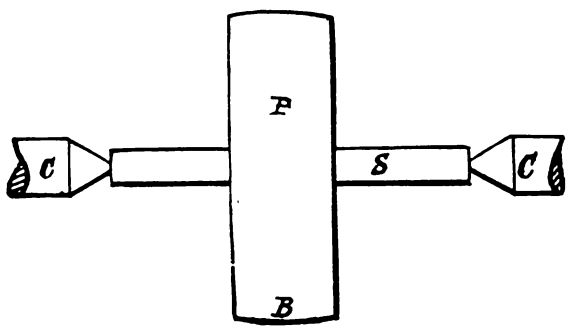

Fig. 2647.

to grip the shaft in two ways; first, if bored when bolted together the edges of the bore will meet the shaft and clip it so firmly as to require each half bore to spring open to permit it to pass on the shaft, but by inserting between the two halves of the hub two thicknesses of writing paper, and boring out the hole the thicknesses of the paper too large (which may be done by placing two pieces of the same paper beneath the calipers or gauge) the bore will be slightly oval when the paper is removed, and will grip the shaft at the crown of each half bore, but the grip thus obtained will not be so firm.

Pulleys of small diameter, as three feet or less in diameter, are usually held to their shafts by set-screws, the consideration of their shapes and position having been already treated of when referring to the applications of keys and set-screws. Pulleys of large diameters, and those which act as fly-wheels as well as pulleys, are usually held by keys.

BALANCING PULLEYS.—A pulley (more especially those running at high speed) should be balanced or in balance when rotating at the greatest speed at which it is intended to run. This is necessary, because if the centrifugal force generated by the pulley's rotation be greater on one side than on another of the pulley, it will cause the pulley shaft to vibrate and shake whenever the amount of unbalanced centrifugal force becomes, on account of the speed of rotation, sufficient to bend the shaft or deflect the framing holding the shaft.

The balancing of a pulley will not be correct unless the centrifugal force is equal at all points on the perimeter in the same plane, as will appear presently. In practice two methods of testing the balance of a pulley are employed: first, the standing; and second,

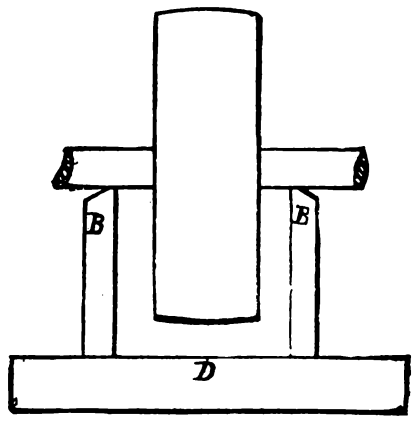

Fig. 2648.

the running balance. A standing balance does not in any sense balance a pulley, but merely corrects the want of balance to a limited degree. A running balance correctly balances a pulley when running up to the speed at which the balance was made, but does not balance for greater speeds.

A standing balance is effected when the shaft being supported horizontally and with as little friction as possible, the pulley will remain at rest in any position in which it can be placed. Thus, in Fig. 2647 let C C represent the two centres of a lathe adjusted in their distance apart so as to sustain the shaft S with just sufficient force to prevent end movement or play of the shaft, and if the pulley P remains motionless when arrested at any point of rotation it is in standing balance. A common method of balancing is to set the pulley in slow rotation several times in succession, and if the same part of the pulley's circumference comes to rest

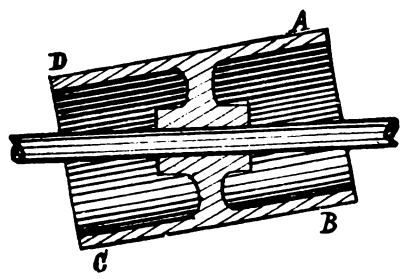

Fig. 2649.

in each case at the bottom as at B then it is heaviest and its weight must be reduced, or weight must be added on the diametrically opposite side of the pulley. Another method is to rest the shaft horizontally on a pair of metallic strips as B B in Fig. 2648, the strips resting on a flat horizontal surface D, the testing being applied as before. Sometimes, however, cylindrical pieces are used in place of the strips or pieces B B.

A pulley that is in balance thus tested, may not, however, be in balance when rotated, or, as already stated, a standing balance may not be a running balance, for the following reasons: In Fig 2649 is a pulley that if turned true inside and out would be of correct standing balance, because the weight is equal on each side of the shaft; thus the point A, though farther from the axis than B, would be counterbalanced by C, while B would be counterbalanced by D, but as soon as the pulley was put in rotation there

would be more centrifugal force generated at A than at B, and more at C than at D, because, though the weights would be equal, the velocities of A and C would be greatest.

Now, suppose that instead of a continuous wide pulley several pulleys were used, being out of true so as to be practically equal in shape to Fig. 2649, and it is apparent that the fact of pulley A B being out of balance is not removed by pulley C D being out in an opposite direction, and that each pulley will tend to bend the shaft in the direction of its excessive centrifugal force.

The effect of this inequality of centrifugal force will depend, in each case, upon the strength of the shaft in comparison with the amount of unbalanced centrifugal force. Suppose, for example, that the centrifugal force at a point A in Fig. 2650 were 10 lbs. greater than at B at a given velocity, and that the strength of the shaft be such that it will bend $\frac{1}{32}$ inch under a weight of 10 lbs.,

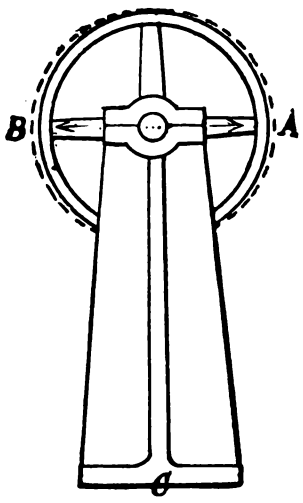

Fig. 2650.

then the effort of the point A will be to swing in a circle $\frac{1}{16}$ inch larger than that due to its diameter. Suppose, then, the stand be so firmly fixed at C as to be motionless in a vertical direction under this effort, then the point A will swing in an oval, as denoted by the dotted lines, the shaft vibrating as denoted by the arrows.

Thus vibrations of the shaft, bearing, &c., occur whenever the excess of centrifugal motion on one side of a pulley is sufficient to spring the shaft, bearings, standard or foundation, as the case may be, and will occur most in the direction in which those parts will most easily succumb. From this it is evident that a pulley practically in balance, so far as being free from vibration at a certain speed, may be considerably out of balance at an increased speed. Thus, suppose a pulley P, in Fig. 2651, has a rim of equal thickness, but the distance of A from the axis of rotation is

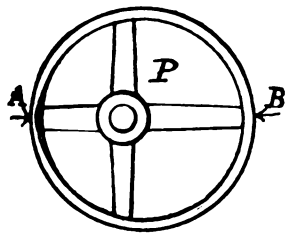

Fig. 2651.

6 inches, while the distance of B is 8 inches; then the centrifugal force at B will, at any speed of rotation, be one-quarter more than that at A, because the distance is one-quarter greater. Suppose, then, that its shaft, bearings, and foundation be capable of resisting 100 lbs. without sensible flexure, but that sensible flexure of those parts will occur under any pressure over 100 lbs.

The centrifugal force of 1 lb. at A and at B, respectively, may be calculated by the following rule:—

Rule.—Multiply the square of the number of revolutions per minute by the diameter of the circle of rotation in feet, and divide the product by 5,870. The quotient is the centrifugal force in terms of the weight of the body.

In the case of A the pulley making, say, 200 revolutions per minute, we have by the rule:

$$\frac{200^2 \times 1}{5{,}870} = 6{\cdot}81 = \text{the centrifugal force.}$$

Likewise, centrifugal force at B $= \frac{200^2 \times 1{\cdot}25}{5{,}870} = 8{\cdot}51 =$ the centrifugal force, 1 and 1·25 being diameters of circle of rotation of A and B in feet.

Now, suppose the revolutions to be 2,000 per minute, we have in the case of A 2,000 × 2,000 × 1 (= 4,000,000) ÷ 5,870 = 681 lbs. centrifugal force. Add one-quarter more, or 170 lbs., to obtain the centrifugal force at B = 851 lbs.; the unbalanced centrifugal force = 170 lbs.; and this being 70 lbs. more than the shaft, bearings, &c., are capable of resisting without flexure, a corresponding vibration will occur, whereas at 200 revolutions the unbalanced centrifugal force was: Centrifugal force at B = 8·51 lbs. less that at A = 6·81 = 1·70 lbs. unbalanced centrifugal force, and it becomes apparent that while at 200 revolutions the pulley would rotate without sensible vibration, at 2,000 revolutions (in the same time), sensible vibration would occur; hence, the sensible vibration of a pulley is in the proportion as the unbalanced centrifugal motion is to the resistance of the shaft, bearings, &c., to flexure, and further, as the unbalanced centrifugal motion increases

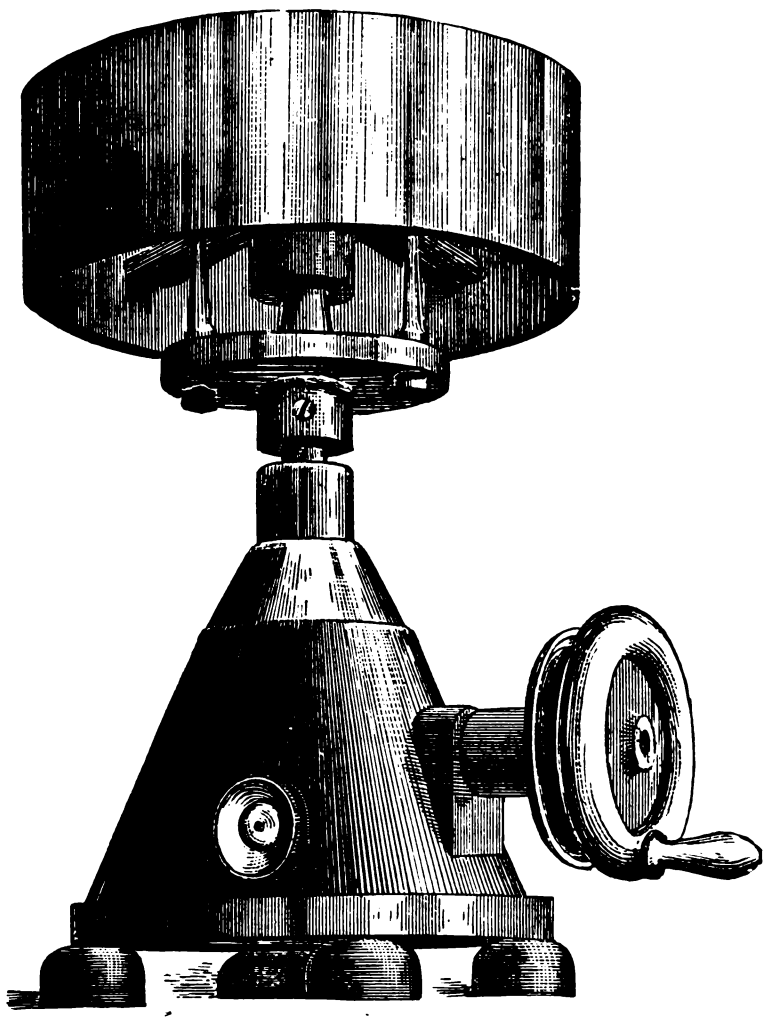

Fig. 2652.

with the velocity, so also does the sensible vibration increase with the velocity.

But there are two ways of increasing the velocity of a pulley: 1st, by increasing the revolutions of a given pulley; 2nd, by employing a pulley of a larger diameter, but making the same number of revolutions. In our example we increased the speed tenfold (from 200 revolutions to 2,000) but the centrifugal force was increased one hundredfold, according with the law that the centrifugal force increases with the square of the revolutins, and 10 × 10 = 100. But if the velocity had been increased by augmenting the diameter of the pulley, the centrifugal force would have increased in the same ratio as the pulley diameter was increased; hence it appears that under equal velocities larger pulleys generate less centrifugal force per unit of unbalanced weight than do smaller ones.

A device for testing the balance of pulleys is shown in Fig. 2652; it consists of a frame carrying a vertical spindle, which may be rotated by suitable bevel-wheels, and the hand wheel shown. In this case it would be preferable to balance the pulley at the greatest speed at which it would be convenient to run it by hand with the

wheel shown, because a pulley balanced at any given speed will be balanced at any lesser speed, although not at a greater one. But the pulley should not be driven by the arms, because the pressure against the same will affect the balance. It would be better therefore to let the spindle of the machine be small enough in diameter to fit the smallest bore of pulley to be balanced, to employ sleeves fitting the spindle and the bores of all larger bored pulleys, and to obtain the most correct results the pulley should be fastened to the sleeve by its set-screws, or keys of the pulley, as the case might be, so that whatever error there might be induced by tightening the same will be accounted for in the balancing. It is obvious also that the pulley bore should fit the sleeve with the same degree of tightness as it will fit the shaft to which it is to be fixed. The heaviest side of the pulley will rotate through a circle of larger diameter, and may be marked by a point, as a tool point moved up to it by a slide rest, or roughly by a piece of chalk steadily moved up to it by hand until it just touches the high side of the pulley.

The methods of correcting the balance are as follows: The heavy side of the pulley having been found, a weight is attached to

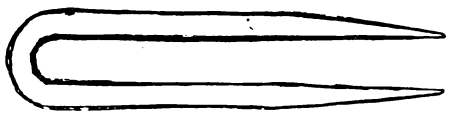

Fig. 2653.

the diametrically opposite side of the pulley; a convenient form of light weight for this purpose is shown in Fig. 2653; it consists of what may be termed a spring clamp, since it holds to the edge of the pulley rim, on which it is forced by hand, by reason of the spring of the jaws. There are numerous clamps of this form, each having a definite weight, as 2 ozs., 3 ozs., 4 ozs., &c.; but for weights above about $1\frac{1}{2}$ lb. a clamp with a set-screw is employed. For a running balance a set-screw is indispensable. It is obvious that pulleys will be more easily and correctly balanced when the inner side of their rim is turned up, as far as the arms will permit, in the lathe; but on account of the expense this is not usually done, except in the case of large pulleys.

In the best practice, however, the pulley is set in the lathe, so that the inside of the rim runs as true as possible. Remarks on this subject are given under the head of chucking pulleys.

When the balance is to be effected by adding weight to the pulley mushroom-shaped pieces of metal are made for the purpose, their weights varying by ounces; the stems are driven through holes drilled through the rim to receive them, and riveted on the face side. The stems are of wrought iron, while the heads may be of cast iron, but are better of lead, because in that case they may be set with a hammer to fit the inner surface of the pulley rim.

In some practice, protuberances, or a web in the middle of the pulley, are cast on the pulley, and the balance is effected by cutting this away to reduce the weight on the heavy side.

When pulleys are to revolve at very high speeds, as in the case of those for emery-wheel spindles, the shafts themselves require to be balanced, especially if of cast iron, because that part of the shaft uppermost in the mould will be of less density and weight than that at the bottom of the mould. The pulley should be balanced separately, and the whole again balanced after being put together, because the weight of the key or set-screw will be sufficient to destroy the balance under a sufficiently high speed of rotation.

The edges of pulley rims should be trued up in the lathe when the rim is turned so that the pulleys to receive a belt may be set in line by pressing a straight-edge, or setting a line to have contact with (as near as possible) diametrically opposite points of the edge of one pulley, and setting the other to have its corresponding edge in line.

Pulleys should run true so that the strain or tension of the belt shall be equal at all parts of the revolution, and the transmitting power shall be equal. The smoother and more polished the surface of the pulley the greater its driving power.

The transmitting power of a pulley may be increased by covering the pulley face with leather or rubber bands, but the thickness of these should be equal both across the width and all around the circumference so as to run true.

The amount of increase of driving power due to this covering is variously stated, but may be taken at about 20 to 30 per cent. A cement for fastening such pulley coverings may be made as follows: Take one ounce of caoutchouc (pure or native rubber) and cut it into thin slices, place it in a tinned sheet-iron vessel with six or seven ounces of sulphide of carbon; the vessel is then to be placed in a water tank previously heated to about 86° Fahr. To prevent the solution from becoming thick and unmanageable, mix with a solution consisting of spirits of turpentine, in which half an ounce of caoutchouc in shreds has been dissolved over a slow fire, and then a quarter of an ounce of powdered resin; from an ounce and a half to two ounces of turpentine being afterwards stirred in, to be added in small quantities. This cement must be kept in a large-mouthed bottle well corked, and in using clean the parts to be united thoroughly with benzine; apply two coats of cement, allowing each to dry before applying the next; when applying the last coat allow the cement to dry so as to become very sticky, then press the surfaces firmly together and allow to thoroughly dry. This is waterproof.

A pulley that imparts motion to the belt enveloping or partly enveloping it is termed a driving pulley or driver. A driven pulley is one that receives motion from, or is driven by, the belt; hence in every pair of pulleys connected by belt, one is termed the driver and the other the driven. The revolutions of two pulleys connected by belt will vary in the same proportion as their diameters, although their rim velocity will be equal.

Suppose, for example, that a pulley of 7 in. diameter drives one of 14 in. diameter, then if there is no slip on either pulley both pulleys will run at the same velocity as the belt, and this velocity must be equal to the velocity of the driver, because the belt is moved by the driver. Now, suppose the driver which is of 7 in. diameter makes one revolution in a minute, and as it is only one-half the diameter of the driven wheel, its circumference will also be half that of the driven, so that it must make two revolutions to carry around length of belt enough to pass once around the driven pulley. The revolutions of the two are, therefore, in the same proportions as are their diameters, which in this case is two to one. As the driven pulley is the largest diameter, it will make one revolution in the same time that the driver makes two. But suppose the driving pulley was 14 and the driven was 7 inches in diameter, then the proportion would still be two to one, and the driven would make two revolutions to every revolution of the driver.

If we are given the number of revolutions a driving pulley makes and the diameter or circumference of both pulleys, and require to find the number of revolutions the driven pulley will make to one or

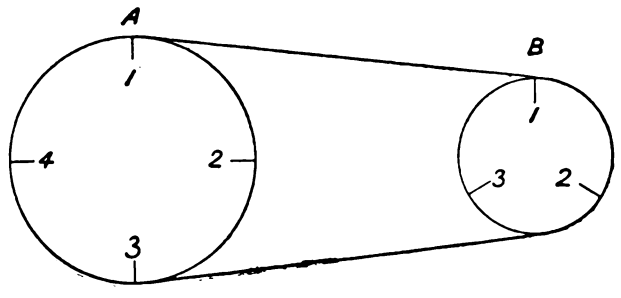

Fig. 2654.

to any given number of the driver, we may consider as follows: Suppose the circumference of the driver to be 24 inches and that of the driven to be 18 inches, then in Fig. 2654 let circle A represent the driver, and circle B the driven pulley. If we divide the circumference of A into four equal divisions, as at 1, 2, 3, and 4, each of these divisions will equal 6 inches, because the whole circumference being 24 inches, one quarter of it will be 6. If we divide the circumference of B into six-inch divisions there will be but three of them as marked, because one-third of 18 (its circumference) is 6. Now three of the divisions at A will move A a full revolution, and the remaining division on A will move B through another one-third of a revolution, hence, each revolution of A equals $1\frac{1}{3}$ revolutions on B. The proportions of the circumference are, therefore, as $1\frac{1}{3}$ to 1, or as 133 is to 100, taking A as the driver, and, therefore, as the basis of the proportion. But suppose we take B as the basis of the proportion, and one revolution of B will cause A to make three quarters of a revolution, or during 100 revolutions of B, A will make

75. But nevertheless during the period that A is making 100 revolutions B will have made one-third more, or $133\frac{1}{3}$, because B makes $1\frac{1}{3}$ revolutions to cause A to make one revolution. From this it will be seen that the proportion is as the greater is to the lesser, and not as the lesser is to the greater, or, in other words, it is in this case as 24 is to 18, which is one and one-third times, for one-third of 18 is 6, and $18+6=24$.

Suppose, now, we take the four divisions on A and the three on B to consider their proportions, and we may say 4 is $1\frac{1}{3}$ times 3, or we may with equal propriety say 3 is $\frac{3}{4}$ of 4, hence 4 is not in the same proportion to 3 that 3 is to 4. Let it now be supposed that a driven pulley B is 18 inches in diameter, and requires to be driven one quarter faster than the driver, what then must be the diameter of that driver? As the revolutions require to be increased one-fourth the pulley diameter must be increased one-fourth. Thus one quarter of $18=4\frac{1}{2}$, and this added to 18 is $22\frac{1}{2}$, which is therefore the diameter of the driving pulley, as may be proved as follows: Suppose the circumferences instead of the pulley diameters to be $22\frac{1}{2}$ and 18 respectively, and that the largest pulley makes 100 revolutions, then it will pass 2,250 ($22\frac{1}{2} \times 100 = 2{,}250$) inches of belt over its circumference, and every 18 inches of this belt will cause the small pulley to make one revolution; hence we divide 2,250 by 18, which gives us 125 as the revolutions made by the small pulley, while the large one makes 100. Thus it appears that we obtain the same result whether we take the circumferences or the diameters of the pulleys, because it is their relative proportions or relative revolutions that we are considering, and their actual diameters do not affect their proportions one to the other. Thus, if a 10-inch pulley drives a 30-inch one, the proportions being three to one, the revolutions will be three to one, and the driven being three times the largest, will make one revolution to every three of the driver. If the driver was 3 inches in diameter and the driven 9, the revolutions would be precisely the same as before, but with equal revolutions the velocities would be different, because in each revolution of the driver it will move a length of belt equal to its circumference; hence, the greater the circumference the greater length of belt it will move per revolution. To take the velocity into account, we must take into consideration the number of revolutions made in a given time by the driver. Suppose, for example, that the driver being 3 inches in diameter makes one revolution in a minute, then it will move in that minute a length of belt equal to its circumference, so that the circumference of the driver, multiplied by the number of its revolutions per minute, gives its velocity per minute. Thus, if a pulley has a circumference of 50 inches, and makes 120 revolutions per minute, then its velocity will be 6,000 inches per minute, because $50 \times 120 = 6{,}000$. The velocity of the belt, and therefore that of the driven wheel, will also be 6,000 inches per minute, as has already been shown. From this train of reasoning the following rules will be obvious:—

To find the diameter of the driving pulley when the diameter of the driven pulley and the revolutions per minute of each are given:

Rule.—Multiply the diameter of the driven by the number of its revolutions, and divide the product by the number of revolutions of the driver, and the quotient will be the diameter of the driver.

The diameter and revolutions of the driver in a given time being known, to find the diameter of a driven wheel that shall make a given number of revolutions in the same time:

Rule.—Multiply the diameter of the driver by its number of revolutions, and divide the product by the number of revolutions of the driven. The quotient will be the diameter of the driven.

To find the number of revolutions of a driven pulley in a given time, its diameter and the diameter and revolutions of the driver being given:

Rule.—Multiply the diameter of the driver by the number of its revolutions in the given time, and divide by the diameter of the driven, and the quotient will be the number of revolutions of the driven in the given time.

Suppose, however, that the speed of the shaft only is given, and we require to find the diameter of both pulleys, as, for example, suppose a shaft makes 150 revolutions per minute, and we require to drive the pulley on a machine 600 revolutions per minute. Here we have two considerations: first, the relative diameters of the two pulleys, and secondly, the diameter of pulley and width of belt necessary to transmit the amount of power necessary to drive the machine at the speed required. Leaving the second to be discussed hereafter in connection with the driving power of belts, we may proceed to determine the first as follows: The pulley on the machine must be as much smaller than that on the main shaft, as the speed of the pulley on the machine requires to run faster than does the main shaft, hence we divide the 600 by 150 and get four, which is the number of times smaller than the driver that the driven pulley must be. Suppose then the driver is made a 24-inch pulley, then the driven must be a 6-inch one, because $24 \div 4 = 6$; or we may make the driver 36, and the driven 9, because $36 \div 4 = 9$; or the driver being 48 inches in diameter, the driven must be 12, because $48 \div 4 = 12$. To reverse the case, suppose the shaft to make 200 revolutions per minute, and the machine pulley to make 50, then since $200 \div 50 = 4$, the driven (or machine pulley) must have a diameter four times that of the driver, and any two pulleys of which one is four times the diameter of the other may be used, as say: Pulley on line shaft 10 inches in diameter, pulley on machine 40 inches in diameter; or, pulley on line shaft 20 inches in diameter, pulley on machine 80 inches in diameter.

Now, in nearly all cases that are met with in practice, it would be inconvenient to have so large a pulley as 80 inches in diameter to drive a machine, and again in most cases a driving pulley of 10 inches in diameter would be too small. So likewise in cases where the machine pulley requires to run faster than the line shaft, a single pair of pulleys will be found to give, where great changes of revolution are required, too great a disproportion in the diameter of the pulleys; thus in the case of a shaft making 150, and the machine requiring to make 600, we may use the following pairs of pulleys:—

	On Main Shaft.	On Machine Shaft.
First . . .	32 inch diameter	8 inch diameter.
Second . .	40 ,, ,,	10 ,, ,,
Third . . .	48 ,, ,,	12 ,, ,,
Fourth . . .	60 ,, ,,	15 ,, ,,

But the machine may require so much power to drive it, that with the width of belt it is desired to employ, a pulley larger than either of these is necessary, as, say, one 20 inches in diameter. Now, with a 20-inch driven pulley, the driver would require to be 80 inches in diameter, because $20 \times 4 = 80$. But there may not be room between the shaft and the ceiling for a pulley of so large a diameter, or such a large pulley may be too heavy to place on the shaft, or it may be too costly, and to avoid these evils, countershafts are used.

By the employment of a countershaft we simply obtain—with two pairs of pulleys and by means of small pulleys—that which could be obtained in a single pair, providing the great difference in their diameters (necessary to obtain great changes of rotation), were not objectionable; all that is necessary, therefore, is to accomplish part of the required change of rotation in one pair, and the remainder in the other. In doing this, however, while the velocity of each driver and driven will be equal (as was explained with reference to a single pair), notwithstanding the difference in their diameters, yet the velocity of one pair will necessarily differ from that of the other, so that the pulley on the machine will vary in its velocity as well as in its rotation from that of the first driver. The first driver is that on the main or driving shaft, and the pulley it drives is the first driven. The second driver is the second pulley on the countershaft, and the second driven is the one it drives or that on the machine. Suppose, then, a driving shaft makes 100 revolutions per minute, and the machine requires to make 600, then the speed of rotation requires to be increased six times. Now we may effect this change of six times in several ways; thus: Suppose we increase the rotations three times in the first pair, then the second pulley will make 300 rotations, or three times those of the main shaft, and all we have to do is to make the second driven one-half the diameter of the second driver, and its rotations will be double those of the second driver, which will give the required speed of 600 revolutions. Suppose, however, we change the speed four times in the first pair, and the 100 of the shaft becomes 400 on the countershaft, and to increase this to 600 on the second driven, all that is required is to make its diameter one-half less than that

of the second driver, because 600 is one-half more than 400. From this it will be perceived that the number of changes or amount of increase or decrease of speed being given, the proportion of diameters for both pairs of pulleys will be represented by any two numbers which, multiplied together, will give a sum equal to the number of increased revolutions required. Having found the proportions for each pair, it remains to determine their actual diameters, and they will be found to vary under different conditions.

Suppose, for example, we have the following conditions: Main shaft runs 100; machine must run 600. The pulley on the line shaft is 36 inches in diameter; required, the diameters for the other three pulleys.

To make three changes in the first pair, the first driven must be ⅓ the diameter of the first driver, which is 12 inches. Now the second pair we may make any diameters that are two to one; and since the second driver is to be the smallest, we may select as small a pulley as will answer for the machine, and make its driver twice its diameter.

But suppose it is the diameter of the pulley on the machine that is fixed, and the diameter of the other three require to be found. Let the diameter of the second driven be 12; then its driver on

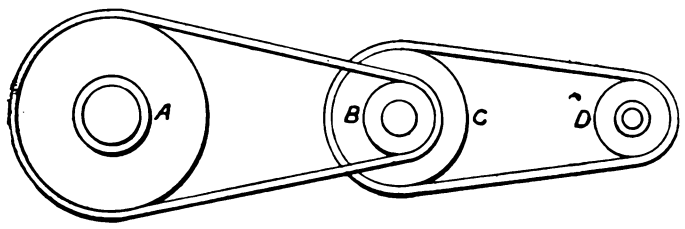

Fig. 2655.

the countershaft must be 24. The other two must have diameters 3 to 1 as before, any suitable wheels being selected.

Yet another condition may occur. Thus, suppose the countershaft is on hand, and that it has on it two pulleys, as a 12 and a 24-inch; then a 36 on the inner shaft will be three times as large as the 12, and a 12-inch on the machine will be twice as small; or, what is the same, one half as large as the 24.

When the principle is clearly understood the calculations can be performed mentally with ease so far as the required diameters to attain the necessary speed is concerned, but there are other considerations that claim attention.

Thus, for example, to multiply the rotations 6 times we may proportion the first pair as follows: Driver 48, driven 16; second pair, driver 30, driven 15 inches in diameter.

Or we may proportion them as follows: First pair: driver 36, driven 12; second pair: driver 28, driven 14 inches in diameter.

In the second arrangement of diameters the drivers are each 2 inches, and the driven each 1 inch less in diameter than in the first; hence their cost would be diminished, as would also be the wear of the journals, on account of the reduced weight of the pulleys; hence, if the driving capacity of each pulley is equal to the requirements the second arrangement would be preferable.

In considering this part of the subject, first let it be shown that although the horse-power transmitted by the two belts is equal whatever be the proportions of the pulleys (provided, of course, that the belts do not slip), yet the strain or wear and tear of the belts varies, and the requirements for one belt are therefore different from those for the other.

In Fig. 2655 let A represent a 36-inch pulley on the driving shaft, B a 12-inch, and C a 24-inch pulley on a countershaft, and D a 12-inch pulley on a machine shaft. Let the main shaft make 100 revolutions per minute, and the machine requires a force to move it equal to 50 pounds applied to the perimeter of D. Now the rotations of D will, with these pulleys, be six to one of the main shaft or A, which gives D 600 revolutions per minute, thus: 100 × 6 = 600. The circumference of D is about 37·69 inches, which, multiplied by 600 (the number of its revolutions), gives 22,614 inches, or 1,884·5 feet as its speed per minute. This multiplied by the 50 pounds it takes to move the machine at the perimeter of D, gives 94,225 as the foot pounds per minute required to drive the machine 600 revolutions per minute, and this, therefore, is the amount of power transmitted by each belt. On the second belt this is shown to be composed of 50 pounds moving 1,884½ feet per minute, hence we may now find how it is composed on the first belt, as follows:—

The diameter of the first driver is 36 inches, and its circumference 113·09 inches, or 9·42 feet; this, multiplied by its revolutions per minute, will give its speed, thus: 9·42 × 100 = 942 feet per minute. To obtain the necessary amount of pull for this first belt, we must divide this speed into the number of foot pounds it takes to drive the machine, thus: 94,225 ÷ 942 = 100·02. The duties of the two belts are therefore as follows:—

First belt, weight of pull	100·02
„ speed per minute	942 feet.
Second belt, weight of pull	50·00
„ speed per minute . . .	1884·5 feet.

The duty in foot pounds being equal, as may be shown by multiplying the feet per minute by the force or weight of the pull, leaving out the fractions, thus:—

942 × 100 = 94,200.
1884 × 50 = 94,200.

The difference in the requirements is, then, that the first belt must have as much more weight or force of pull than the second as its speed is less than that of the second.

It is obvious that in determining the proportions of the pulleys this difference in the requirements should be considered, and the manner in which this should be done depends entirely upon the conditions.

Thus, in the case we have considered, the speed was increased, but the object of the countershaft may be to decrease the speed, and in that case the conditions would be reversed, inasmuch as though the foot pounds transmitted by both belts would still be equal, yet the speed would be greatest and the strain or pull the most on the second belt instead of on the first.

It is obvious, then, that the proportions of the pulleys being determined the actual diameters must be large enough to transmit the required amount of power without unduly straining the belt.

Chapter XXXII.—LEATHER BELTING.

THE names of the various parts of a hide of leather as known to commerce are as follows:—

In Fig. 2656 the oblong portion between the two belly parts marked G G is known as the "butt," and when split down the ridge, as shown by the dotted line down the centre, the two pieces are known as "bends;" the two pieces marked Y are "belly offal;" D is known as "cheeks and faces." The butt within the dotted line may extend in length from A to B, or from A to C; if cut off between B and C that portion is called the "range," or the whole from B to X may be cut in one piece and termed a "shoulder."

Sometimes the range is cut off and the rest would be called a shoulder with "cheeks and faces" on; or, again, the range and shoulder may be in one nearly square piece. The manner of cutting this part depends upon the spread and size of the hide.

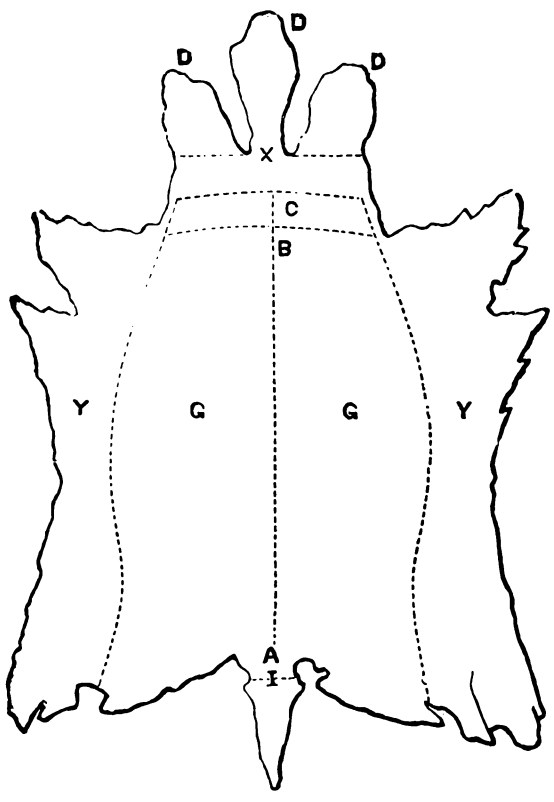

Fig. 2656.

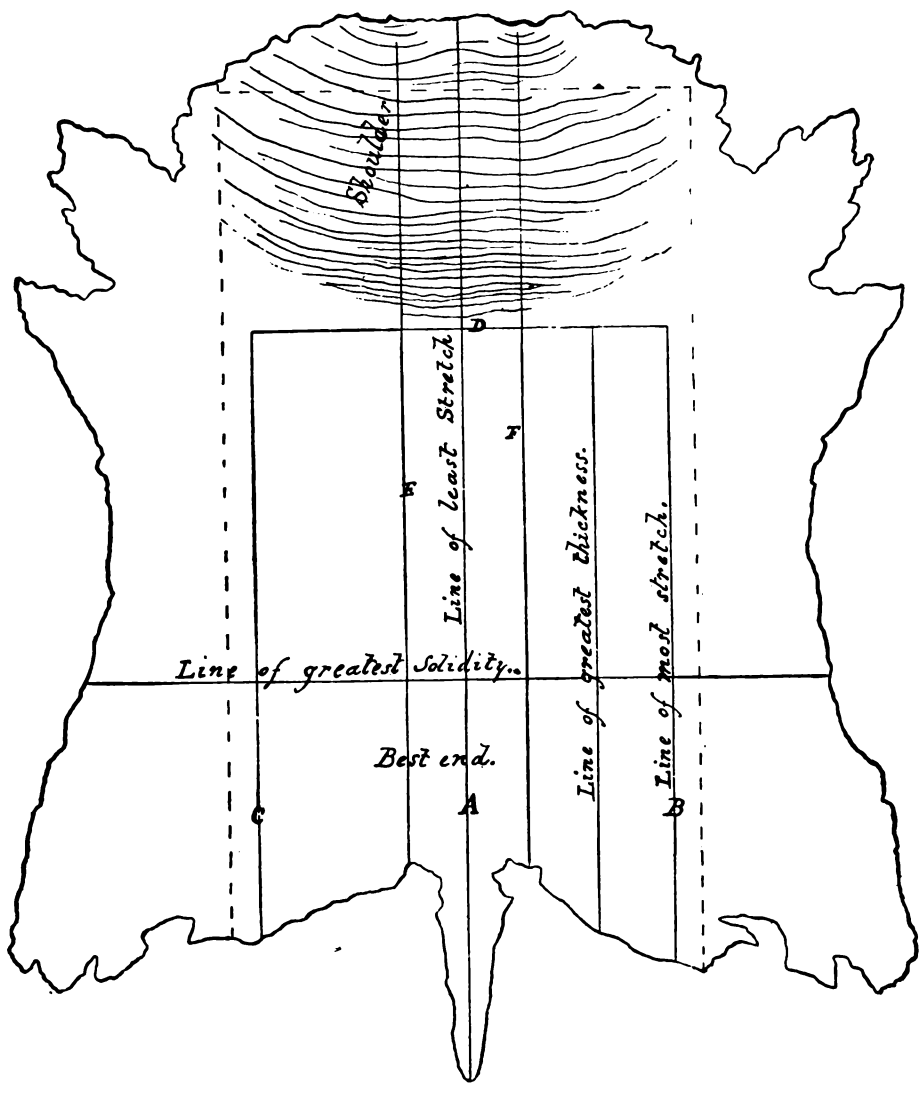

Fig. 2657.

The part of the hide that is used to manufacture the best belting is shown in Fig. 2657, on which the characteristics of the various parts are marked. The piece enclosed by the dotted lines is that employed in the manufacture of the commonest belting, while that enclosed by the full lines B,C,D is that used for the best belting. The former includes the shoulder, which is more soft and spongy, while it contains numerous creases, as shown. These creases are plainly discernible in the belt when made up, and may be looked for near the belt points.

The centre of the length of the hide will stretch the least, and the outer edges on each side of the length of the hide the most. Hence it follows that the only strip of leather in the whole hide that will have an equal amount of stretch on each edge is that cut parallel to line A, and having that line as a centre of its width. All the remaining strips will have more stretch on one edge than on the other, and it follows that, to obtain the best results the leather should be stretched after it is cut into strips, and not as a whole in the hide, or in that part of it employed for the belt strips. It is found, indeed, that, even though stretched in strips, the leather is apt in time to curve. Thus a belt that is straight when rolled in the coil will, on being unrolled, be found to be curved. It is to be observed, also, that each time the width of the strips is reduced, this curving will subsequently take place; thus, if a belt 8 inches wide and quite straight, be cut into two belts of 4 inches wide, the latter will curve after a short time. The reason of this is almost obvious, because it is plain that the edge that was nearest the centre line of the hide offers the greatest resistance to stretching; hence, when the strip is stretched straight, and an equilibrium of tension is induced, reducing the width destroys to some extent this equilibrium, and the leather resumes, to some extent, its natural conformation. This, however, is not found to be of great practical importance, so long as the outer curve of one piece is on the same side as the outer curve of its

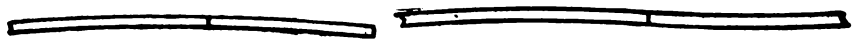

Fig. 2658.

neighbor, as shown on the left view in Fig. 2658, in which case the belt will run straight, notwithstanding its curve; but if the curves are reversed, as on the right in Fig. 2658, the belt will run crooked, wabbling from side to side on the pulley. To avoid this, small belts may be made continuous by cutting them from the hide, as shown in Fig. 2659; but in this case it is better that the belt be cut from the centre strip of the hide

If the leather is stretched in strips after being cut from the hide, the amount of the stretch is about 6 inches in a length of $4\frac{1}{2}$ feet of a belt, say, 4 inches wide, but the stretch will be greater in proportion as the width of the strip is reduced. But if stretched as a whole, the amount of stretch will be about 1 inch per foot of length, the shoulder end stretching one-third more.

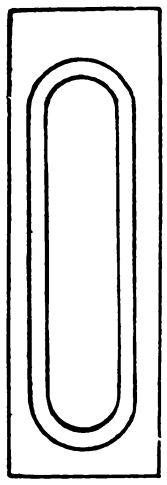

Fig. 2659.

If the leather has been properly stretched in strips the length of the belt may be cut to the length of an ordinary tape line drawn tightly over the pulleys, which allows the same stretch for the belt as there is on the tape line, added to the degree of tension due to cutting the belt too short to an amount equalling its thickness (as would be the case if the belt is cut of the same length as the tape line); or if the belt is a double one, the belt thus cut to length would be too short to an amount equal to twice the thickness of the strips of leather of which it is composed.

When the amount to which the leather has been stretched is an unknown quantity (as is commonly the case), the workman cuts the belt too short, to an amount dictated solely by judgment, following no fixed rule. If, as in the case of narrow belts, the stretching be done by hand, the belt is placed around the pulleys, stretched by hand, and cut too short to an amount dictated by judgment, but which may be stated as abo. t $2\frac{1}{2}$ per cent. of its length.

But the stretch of a belt after it is put to work proceeds very much more rapidly if it has been stretched in the piece and not in the strip, hence it gets slack in the course of a few hours, or of a day or more, according to how much it has been stretched; whereas one properly stretched in the strip will last for weeks, and sometimes for months, without getting too slack.

The results of some experiments made by Messrs. J. B. Hoyt & Co. on the strength of the various parts of a hide are given in Fig. 2660. One side of the part of the hide used for leather belting was divided off into 48 equal divisions, each piece being $11\frac{3}{4}$ inches long, and two inches wide, the results of each test being marked on the respective pieces. The first column is the strain under which the piece broke; the second column is the amount in parts of an inch that the piece stretched previous to breaking; and the third column is the weight of the piece in ounces and drachms.

From the table it appears that the centre of the hide which has the most equal stretch has the least textile strength, while in general that which has the most stretch has the greatest textile strength, but at the same time the variations are in many cases abrupt.

A single belt is one composed of a single thickness of leather put together, to form the necessary length, in pieces, riveted and cemented together at the joint, or sewed or pegged as hereafter described.

A double belt is similarly constructed, but is composed of two thicknesses of leather cemented and riveted, pegged, or sewed together throughout its whole length, as hereafter described. The object of a double belt is to increase the strength without increasing the width of the belt. Belts are usually made in long lengths coiled up for ease of transportation, the length of belt required being cut from the coil.

To find the length in a given coil that is closely rolled—Rule: the sum of the diameter of the roll and the eye in inches, multiplied by the number of turns made by the belt, and this product multiplied by the decimal ·1309, will equal length of the belt in feet.

The grain or smooth side of the leather is the weakest, as may be readily found by chamfering it to a thin edge, when it will tear like paper, and a great deal more easily than will the flesh side under similar treatment. Again, it will crack much more readily: thus, take a piece of leather and double it close with the grain side outward, and it will crack, as shown in Fig. 2661 at C, whereas if doubled, however closely, on the flesh side no cracks will appear. If the edge of a clean-cut piece of leather be examined, there will be found extending from the grain side inward a layer of lighter color than the remainder of the belt; and this whole layer is less fibrous and much weaker than the body of the belt, the strongest part of which is on the flesh side. If the grain side is shaved off thin and stretched slightly with the fingers it will exhibit a perfect network of small holes showing where the hair had root. Here, then, we have weakness and excessive liability to crack on the grain side of the leather, and it is obvious

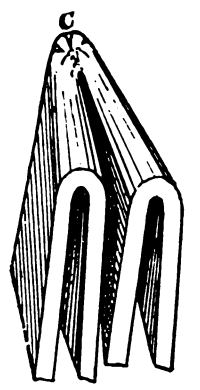

Fig. 2661.

2,000	¼	3.	2,050	3-16	3.1	2,150	3-16	3.2	2,175	¼	3.3
1,400	9-32	2.12	2,000	⅛	3.	2,625	3-16	3.4	2,325	7-32	3.4
2,000	¼	2.11	2,075	3-16	3.1	2,375	7-32	3.4	2,175	7-32	3.5
2,075	¼	2.12	2,700	7-32	3.3	2,600	7-32	3.4	2,275	5-32	3.7
2,450	¼	2.13	3,025	9-32	3.7	2,575	11-32	3.8	2,225	7-32	3.10
2,475	¼	3.	2,975	5-16	3.6	3,200	9-32	3.10	2,175	⅜	3.10
2,575	11-32	3.2	2,875	9.32	3.7	3,475	11-32	3.13	1,850	11-32	3.11
2,675	11-32	3.2	3,075	11-32	3.8	3,450	9-32	4.	1,950	¼	3.11
2,650	⅜	3.2	2,900	9-32	3.6	3,150	3-16	3.15	2,225	¼	3.10
2,800	¼	3.1	3,050	5-16	3.6	2,850	¼	3.13	2,275	3-16	3.7
2,700	¼	3.	3,150	7-32	3.5	3,000	3-16	3.10	2,600	¼	3.5
2,650	¼	2.13	3,000	7-32	3.4	3,400	⅛	3.6	2,550	¼	3.4

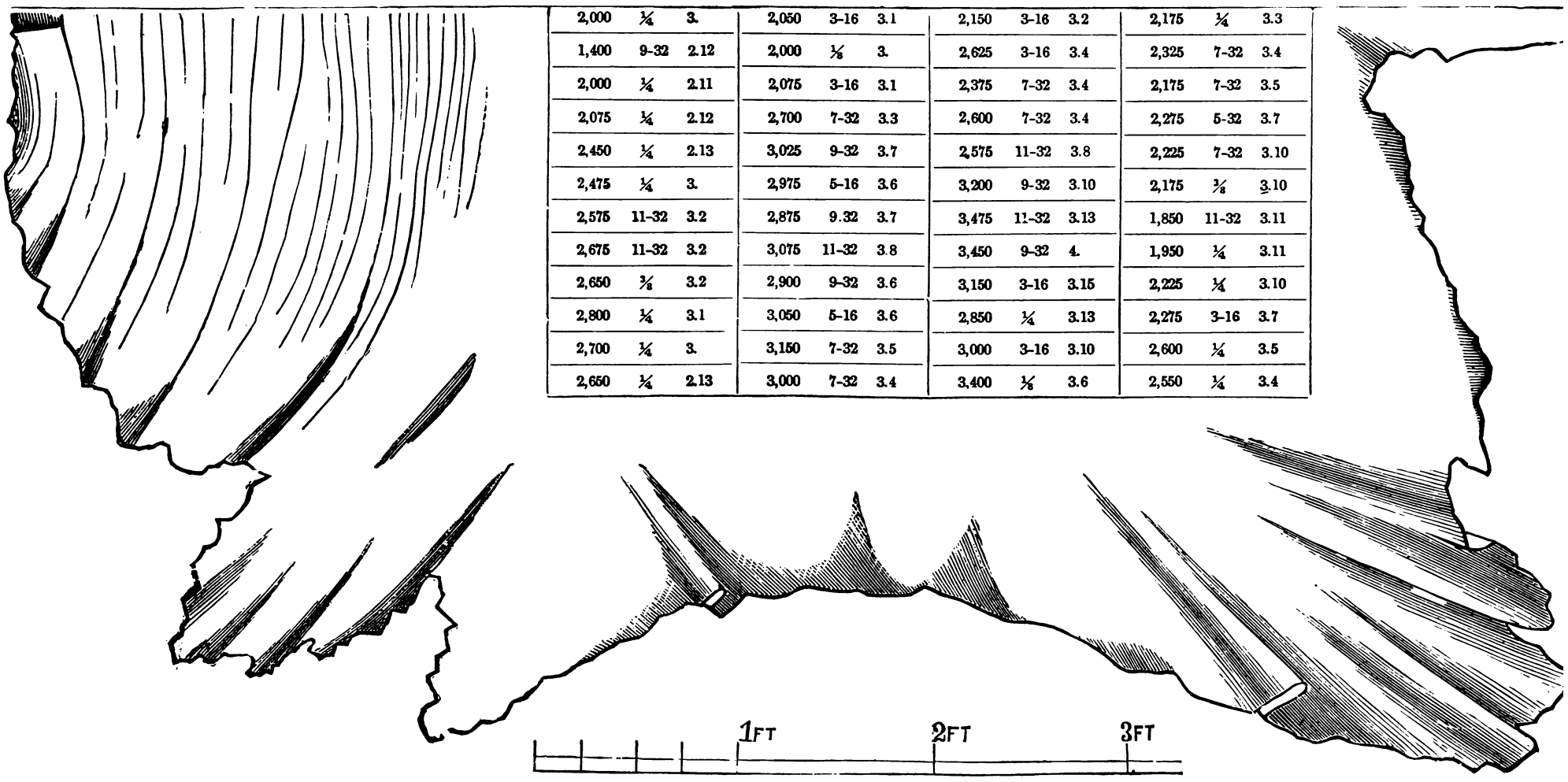

Fig. 2660.

that if this side is the outside of the belt, as in Fig. 2662, at A, the tendency is to stretch and crack it, especially in the case of small pulleys, whereas if the grain side were next to the pulley the tendency would be to compress it, and therefore, rather to prevent either cracking or tearing. Furthermore, very little of the belt's strength is lost by wearing away its weakest side.

Another and important consideration is, that the grain side will lie closest and have most contact over a given area with the pulley surface.

In making double belts of extra good quality, it is not uncommon to cut away or shave off the grain side of both belts, and place those surfaces together in making up the belts.

If the grain side of a belt is the outside when on the pulleys, and a crack should consequently start, the destruction of the belt proceeds rapidly, because the line of crack is the weakest part of

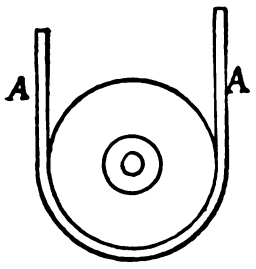

Fig. 2662.

the belt, and the belt has less elasticity as a continuous body, and more at the line of crack. Cracking may, to some extent, be provided against by oiling the belt, and for this purpose nothing is better than castor oil. In the manufacture of belts, extra pliability is induced by an application of fish oil and tallow, applied when the belt (after having been wetted), is in a certain stage of progress toward drying. The oil and tallow are supposed to enter the pores of the leather and supply the place of the evaporated water.

LENGTH OF BELTS.—Since the stretch of a belt is variable in different belts of the same length, no rule can be given for the amount to which a belt should be cut shorter than the measured length around the pulleys, and it follows, therefore, that the length of a belt cannot be obtained precisely by calculation. In practice the necessary length for a belt to pass around pulleys already in their places upon the shaft is usually obtained by passing a tape line or cord around the pulleys, the stretch of the tape line being allowed as that necessary for the belt. Then when the belt is placed around the pulleys it is shortened if it should appear to

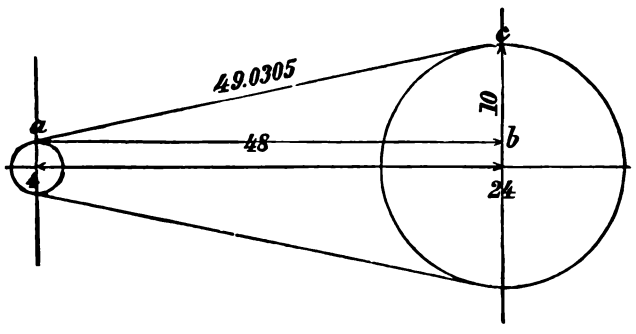

Fig. 2663.

require more tension. If, however, the belt length for pulleys not in position is required, it may be obtained as follows, the error being so slight as to be within the margin of difference of stretch in different belts, and therefore of no practical moment:—

For open belts let the distance between the shaft centres, as *a b* in Fig. 2663, be the base of a right angle triangle, and the difference between the semi-diameters, as *b c*, the perpendicular. Square the base and the perpendicular, and the square root of the sum of the two will give the hypothenuse, and this multiplied by 2 and added to one-half the circumference of each pulley is the required length for the belt. This will give a belt too long to the amount to be cut out of the belt to give it the necessary tension when on the pulleys.

Example.—Let the distance between centres in Fig. 2663 be 48 inches; diameter of large pulley 24 inches; diameter of small pulley 4 inches—

Here distance between centres	48	
" " "	48	
	384	
	192	
	2304	
Square of perpendicular	100	
	2404 Square root of 2404 =	49·03
	Multiply by 2	2
		98·06
Half circumference of large pulley		37·699
		135·759
Half circumference of small pulley		6·283
Length of belt . . .		142·042

A simpler rule which gives results sufficiently accurate for practical purposes is as follows:—

Rule.—Add the diameter of the two pulleys together, divide the result by 2, and multiply the quotient by $3\frac{1}{4}$, then add this product to twice the distance between the centres of the shafts, and you have the length required.

When the length of a crossed belt is required, and the pulleys are not erected upon the shafts, it is, on account of the abstruseness

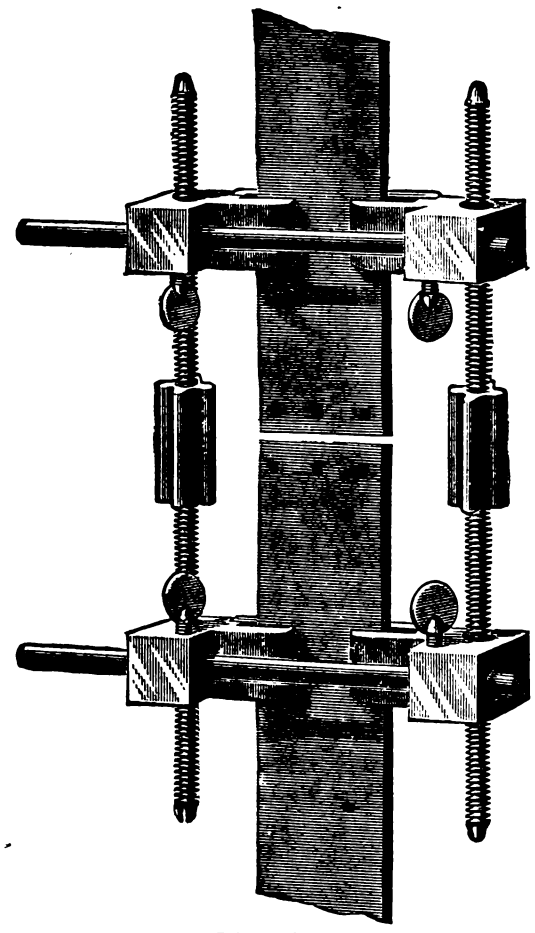

Fig. 2664.

of a calculation for the purpose, preferred in workshop practice to mark off by lines the pulleys set at their proper distance apart (either full size or to scale), and measure the length of the side of the belt, supposing the belt to envelop one-half the circumference only of each pulley, and to add to this one-half the circumference of each pulley; or if there is a great difference between the relative diameters of the pulleys and the distance apart of the shafts is unusually small, the lengths of the straight sides of the belt are measured and the arcs of contact around the pulleys are stepped around by compasses, the set of the compasses being not more than about one-tenth the circumference of the pulleys. This gives a more near result than that obtained by calculation, because although it will give a belt shorter than by calculation, yet the belt will be too long on account of the stretch necessary to the tension required for ordinary conditions.

In narrow belts, as, say, three inches and less in width, the belt may be cut to the length of a tape line passed over the pulleys, and when placed over the pulleys it may be strained under a hand

pull and cut as mucn shorter as the tension under hand pressure indicates as being necessary.

But if the belt is a wide one a stretching clamp, such as shown in Fig. 2664, is employed, the screws being right hand at one end and left hand at the other, so that operating them draws the clamps, and therefore the ends of the belt, together.

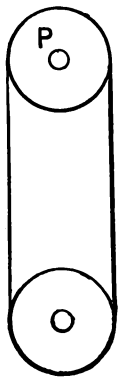

Fig. 2665.

The stretch of a belt not stretched in the piece proceeds slowly when the belt is at work, hence if laced at first to a proper degree of tension it will get slacker in a few hours or in a day or so, and must be tightened, or taken up as it is termed, by cutting a piece out. For this purpose a butt joint possesses the advantage that the piece to be taken out may be less, and still leave the end clear for new holes to be punched, than is the case with a lap joint, which occurs because the butt joint occupies a shorter length of the belt than is the case with a lap joint.

When a belt is under tension upon two pulleys and at rest, the friction or grip of the belt upon the respective pulleys (supposing them to be of the same diameter and therefore to have the same arc and area of contact) will depend upon the relative positions of the pulleys; thus suppose one pulley to be above the other as in Fig. 2665, the upper pulley P will have the grip due to the tension

Fig. 2666.

of the belt added to that due to the weight of the belt, whereas if placed horizontally, as in Fig. 2666, the weight of the belt will fall equally on the two pulleys, and for this reason vertical belts of a given width require to have a greater tension to transmit the same amount of power as the same belt would if placed horizontally. But as soon as motion was transmitted, by the belt, from one pulley to the other, the belt on one side of the pulley would be under greater tension then that on the other.

Suppose, for example, a belt to transmit motion and power from

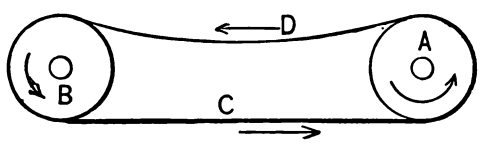

Fig. 2667.

pulley A in Fig. 2667, to pulley B, then the side C of the belt is that which drives or pulls B, and it is therefore called the driving side of the belt, the resistance to rotation offered by B causing the driving side of the belt to be the most strained; and hence the straightest, whereas the side D will be free of the tension due to the resistance of B.

But if the direction of motion be reversed as in Fig. 2668, A still being the driving pulley, the side D will be the one most tightly strained, and therefore, the driving side of the belt; or, in

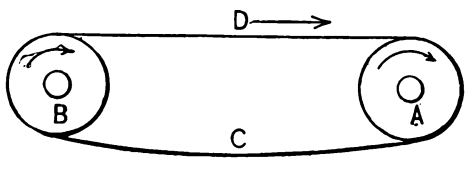

Fig. 2668.

other words, the driving side of a belt is always that side which approaches the driving pulley, and the slack side is always that which recedes from the driving pulley. In horizontal belts, however, the driving side of the belt is not a straight line, because of the belt sagging from its own weight no matter how tightly it may be strained, but the shorter the belt the less the sag.

It is always, therefore, desirable, so far as the driving power of the belt is concerned, to have the lower half (of belts running horizontally) the driving side, because in that case the sag of the belt causes it to envelop a greater arc of the pulley, which increases its driving power. If the circumstances will not permit this and the sag of the belt operates to practically incapacitate the belt for its duty, what is termed an idle wheel or idler may be employed as shown in Fig. 2669 at E, serving to prevent the sag and to cause the belt on the driving side to envelop a greater portion of the pulley's circumference, and hence increase its friction on the pulley and therefore its driving power. In the example the two pulleys A and B are of equal diameters; hence the idle wheel is placed midway between them, but when such is not the case the idle wheel should be located according to the circumstances and the following considerations. The idle wheel requires a certain amount of power to drive it, and this amount will be

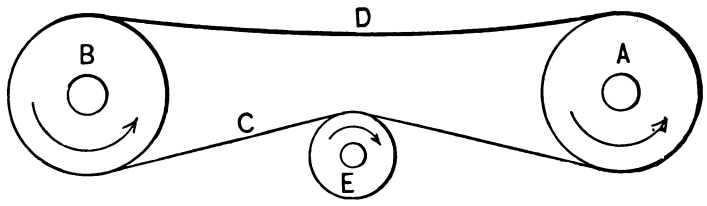

Fig 2669.

greater as the idle wheel is nearer to the smallest wheel of the pair connected; but on the other hand, the closer the idle wheel to the small pulley (all other factors being equal) the greater the arc of small pulley surface enveloped by the belt, and hence the greater the belt's driving power. When therefore a maximum increase of driving power is required, the idler must be placed near to the smallest pulley, the desired effect being paid for in the increased amount of motive power required to rotate the driving pulley.

But under equal conditions the larger the diameter of the idle wheel the less the power required to drive it, because the less its friction on its journal bearing. A belt tightener should whenever practicable be placed on the slack side of the belt.

Belt tighteners are sometimes used to give intermittent motion, as in the case of trip hammers; the belt being vertical is made long enough to run loose, until the tightening pulley closes the belt upon the pulley, taking up its slack and increasing the arc of contact.

When the direction of rotation of the driven pulley requires to be reversed from that of the driving pulley, the belt is crossed as in Fig. 2670. A crossed belt has a greater transmitting power than one uncrossed (or, as it is termed, than an "open belt") because it envelops a greater arc of both pulleys' circumference. This is often of great advantage where the two pulleys are of widely varying diameter, especially if the small pulley requires to transmit much power, and be of very small diameter.

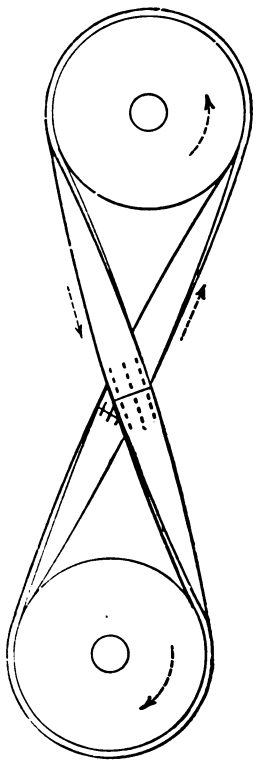

Fig. 2670.

But a crossed belt is open to the objection that the surfaces of the belt rub against each other at the point of crossing, which tends to rapidly wear out the laced joint of the belt. By crossing a vertical belt the lower pulley receives part of the weight of the belt.

When a belt connects two pulleys whose respective planes of revolution are at an angle one to the other, it is necessary that the centre line of the length of the belt shall approach the pulley in the plane of the pulley's revolution, which is sufficient irrespective of the line of motion of the belt when receding from the pulley. This is shown in Fig. 2671, which represents what is known as a quarter twist; A,B are two pulleys having their planes of revolution at a right angle, the belt travelling as denoted by the arrows, then the centre line C of the belt being in the plane of rotation of A on the side on which it advances to A, the belt will continue to run upon the same section of A. If the pulley positions be reversed,

as in Fig. 2672, the same rule applies, and the side D in the figure being that which advances upon B must travel to B in the plane of B's rotation, otherwise the belt would run off the pulley; hence it is obvious that the belt motion must occur in the one direction only.

Shafts at any angle one to another may have motion communicated from one to the other by a similar belt connection, providing that a line at a right angle to the axis of one shaft forms

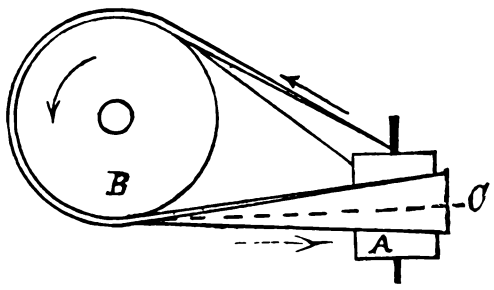

Fig. 2671.

also a right angle with the axis of the other. Thus in Fig 2673 the axis of shaft A may be set at any required angle to the plane of rotation of pulley B, provided that the axial line of A be made to lie at a right angle to the imaginary line *l*, which is at a right angle to the axis of the shaft of B, and that the side of the driving pulley which delivers the belt (as C, Fig. 2671) is in line with the centre line of the driven pulley, as denoted by the dotted line C.

But when this provision cannot be carried out, pulleys to guide

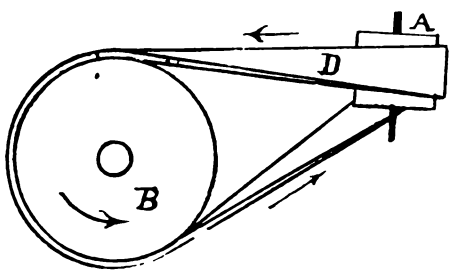

Fig. 2672.

the direction of motion of the belt must be employed; thus in Fig. 2674 are an elevation and plan* of an arrangement of these guide or mule pulleys; A B is the intersection of the middle planes E E and F F of the pulleys P and P′ to be connected by belt. Select any two points, A and B, on this line and draw tangents A C, B D to the principal pulleys. Then C A C and D B D are suitable

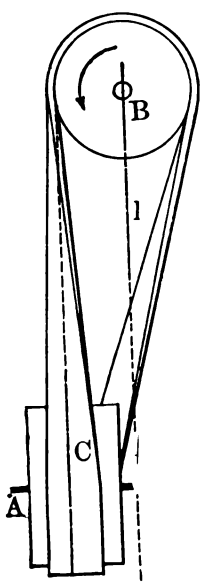

Fig. 2673.

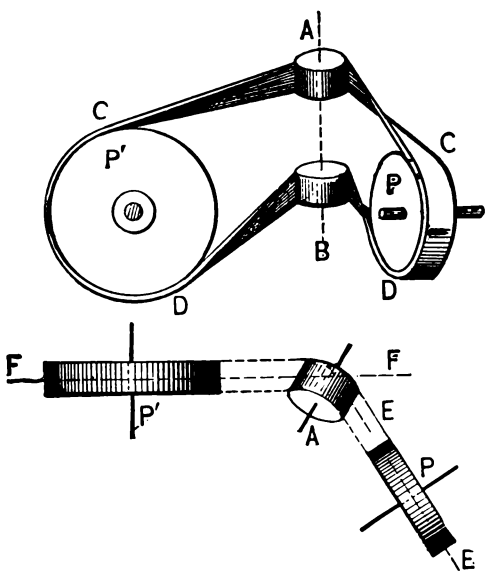

Fig. 2674.

directions for the belt. The guide pulleys must be placed with their middle planes coinciding with the planes C A C, D B D, and the belt will then run in either direction.

In Fig. 2675 is an arrangement of guide pulleys by which two pulleys not in the same plane are connected, while the arc of contact of the smaller pulley C is increased by the idlers or guide

* From Unwin's "Elements of Machine Design."

pulleys A B, while either C or D may be driven running in either direction.

In Fig. 2676 is shown Cresson's adjustable mule pulley stand, which is a device for carrying guide pulleys, and admitting of their adjustment in any direction. Thus the vertical post being cylindrical, the brackets can be swung around upon it and

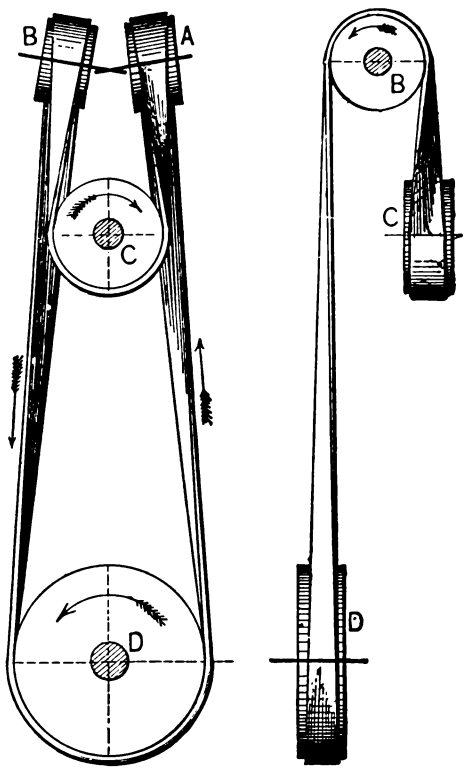

Fig. 2675.

fastened in the required position by the set-screws shown. The brackets carrying the pulleys are also capable of being swung in a plane at a right angle to the axis of the guide pulleys, and between these two movements any desired pulley angle may be obtained. It is obvious that by moving the brackets along the cylindrical post their distance apart may be regulated.

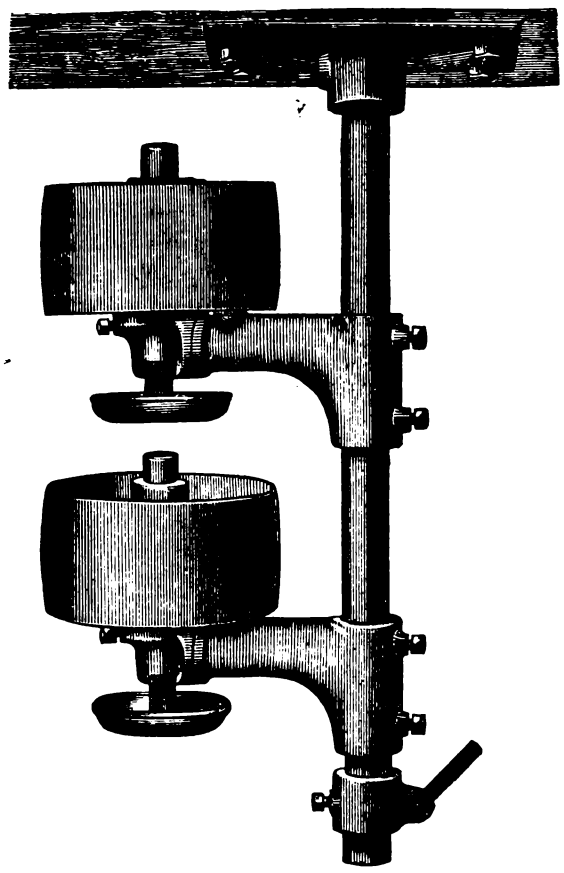

Fig. 2676.

When a belt is stretched upon two pulleys and remains at rest there will be an equal tension on all parts of the belt (that is to say, independent of its weight, which would cause increased tension as the points of support on the pulleys are approached from the centre of the belt between the two pulley shafts); but so

soon as motion begins and power is transmitted this equality ceases, for the following reasons :—

In the accompanying illustration, Fig. 2677, A is the driving and B the driven pulley, rotating as denoted by the arrows ; hence C is the driving and D the slack side of the belt. Now let us examine how this slackness is induced. It is obvious that pulley A rotates pulley B through the medium of the side C only of the belt, and from the resistance offered by the load on B, the belt stretches on the side C. The elongation of the belt due to this stretch, pulley A takes up and transfers to side D, relieving it of tension and inducing its slackness. The belt therefore meets pulley B at the point of first contact, E, slack and unstretched, and leaves it at F, under the maximum of tension due to driving B. While, therefore, a point in the belt is travelling from E to F, it passes from a state of minimum to one of maximum tension. This tension proceeds by a regular increment, whose amount at

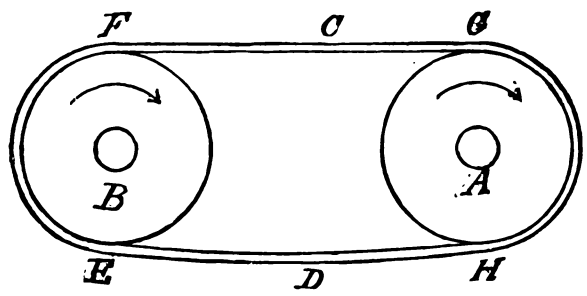

Fig. 2677.

any given point upon B is governed by the distance of that point from E. The increase of tension is, of course, accompanied by a corresponding degree of belt stretch, and therefore of belt length ; and as a result, the velocity of that part of the belt on pulley B is greater than the velocity of any part on the slack side of the belt ; hence the velocity of the pulley is also greater than that of the slack side of the belt. In the case of pulley A the belt meets it at G under a maximum of tension, and therefore of stretch, but leaves it at H under a minimum of tension and stretch, so that while passing from G to H the belt contracts, creeping or slipping back on the pulley, and therefore effecting a reduction of belt velocity below that of the pulley. To summarize, then, the velocity of the part of the belt enveloping A is less than that of A to the amount of the creep ; hence the velocity of the slack side of the belt is that of A minus the belt creep on A. The velocity of the part of the belt on B is equal to that of the slack side of the belt plus the

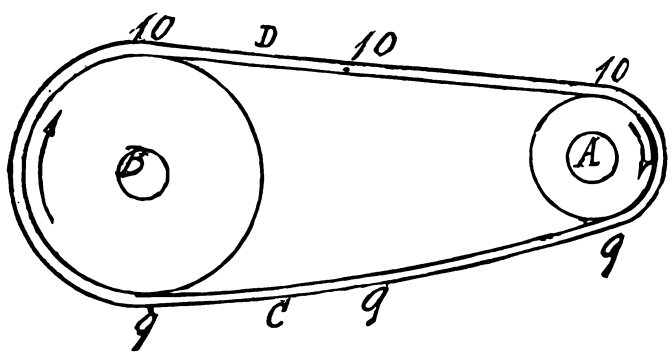

Fig. 2678.

stretch of the belt while passing over B ; and it follows that if the belt or slip creep on one pulley is equal in amount to the belt stretch on the other, the velocities of the two pulleys will be equal.

Now (supposing the elasticity of the belt to remain constant, so that no permanent stretch takes place) it is obvious that the belt-shortening which accompanies its release from tension can only equal the amount of elongation which occurs from the tension ; hence, no matter what the size of the pulleys, the creep is always equal in amount to the stretch, and the velocity ratio of the driven pulley will (after the increase of belt length due to the stretch is once transferred to the slack side of the belt) always be equal to that of the driving pulley, no matter what the relative diameters of the pulleys may be. In Fig. 2678, for example, are two pulleys, A and B, the circumference of A being 10 inches, while that of B is 20 ; and suppose that the stretch of the belt is an inch in a revolution of A (A being the driving pulley). Suppose the revolutions of A to be one per minute, then the velocity of the belt where it envelops A and B, and on the sides C and D, will be as respectively marked.

Thus the creep being an inch per revolution of A, the belt velocity on the side C will be nine inches per minute, and its stretch on B being an inch, the velocity of B will be ten inches per minute, which is equal to the velocity of the driving pulley.

It is to be observed, however, that since A receives its motion independently of the belt, its motion is independent of the creep, which affects the belt velocity only : but in the case of B, which receives its motion from the belt, it remains to be seen if stretch is uniform in amount from the moment it meets this pulley until it leaves it, for unless this be the case, the belt will be moving faster than the pulley at some part of the arc of contact.

Thus suppose P, Fig. 2679, represents a driven pulley, whose load is 1,000 pounds, and that from A to B, from B to C, from C to D, and from D to E, represent equal arcs of contact between belt and pulley, then arc A B will have on it the amount of stretch due to a pull of 250 pounds at B, diminishing to nothing at A. Arc C B will have on it the amount of stretch due to a pull of 500 pounds at C and 250 at B ; arc D C will have on it the amount of stretch due to a load of 750 at D, and 500 at C ; and arc D E will have the tension due to a load of 1,000 pounds at E, and 750 pounds at D. Suppose, then, that the amount of belt stretch is greater between B and C than it is between D an

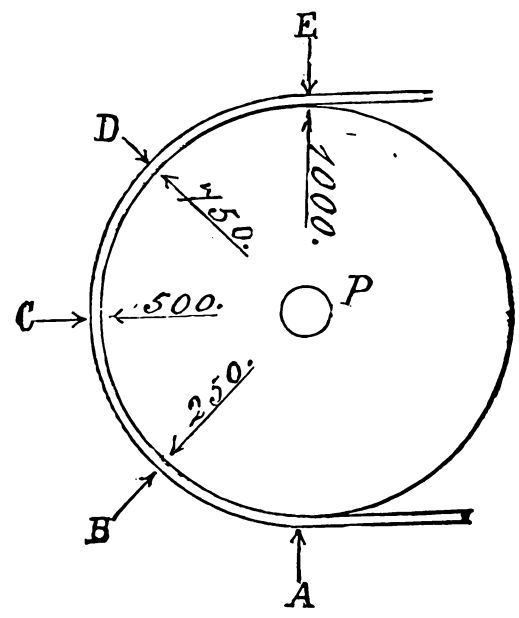

Fig. 2679.

E, then the belt will travel faster between B C than between D E to an amount equal to the difference in stretch, and will at B C slip over the pulley to that amount ; or if the friction of the belt at B C is sufficient to move the pulley in accordance with the stretch, then the belt must move the pulley at a greater velocity than the belt motion from D to E.

But since the friction of the belt is greatest at D E, it will hold the pulley with the greatest force, and hence the velocity of the belt and pulley will be uniform, or at least the most uniform, at D E.

Here arises another consideration, in that the stretch of the leather is not uniform, and the section of belt at C B may stretch more or less under its load than section C D does under its load, in which event the velocities of the respective belt sections cannot be uniform, and to whatever amount belt slip ensues the velocity of the driven wheel will be less than that of the driver.

Attention has thus far been directed to the relative velocities of the pulleys while under continuous motion. But let us now examine the relative velocities when the two pulleys are first put in motion. Suppose, then, the belt and pulley to be at rest with an equal degree of tension (independently of the weight of the belt, as before) on both sides of the belt. On motion being imparted to the driving pulley, the amount of belt elongation due to the stress of the load on the driving pulley has first to be taken up and transferred to the slack side of the belt, and during such transfer

a creep is taking place on the arc of belt contact on the driving pulley.

Furthermore, let it be noted that while under continuous motion the belt first receives full stress at point F, Fig. 2677; at starting it first receives it at point E, and there will be a period of time during which the belt stretch will proceed from E towards F, the pulley remaining motionless. The length of duration of this period will, in a belt of a given width, and having a given arc of contact on the driven pulley, depend on the amount of the load. Thus, referring to Fig. 2680, if the amount of the load is such that the arc of contact between the top and the point B is sufficient to drive the pulley, the pulley will receive motion

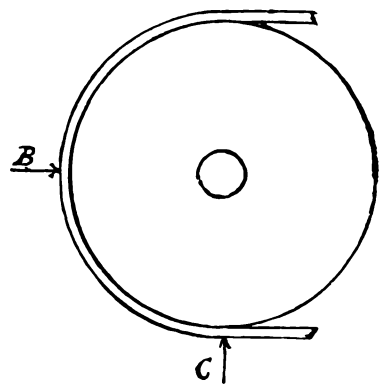

Fig. 2680.

when the belt stretch has proceeded from A to B; but if the load on the pulley be increased the belt stretch will require to proceed farther towards C.

At the top the stretch will proceed simultaneously with that of the driving side of the belt, between the points F G, Fig. 2677; but from the friction between the belt and pulley, the stretch of the part enveloping the pulley will be subsequent and progressive from F towards E, Fig. 2677.

It follows, then, that the velocity of the driven wheel will be less than that of the driver at first starting than when in continuous motion.

As the length of the belt is increased, the gross amount of stretch, under any given condition, increases, and hence the longer the belt, the greater the variation of velocity at first starting between the driven pulley and the driver.

From what has been said, it follows that when a mathematically equal velocity ratio is essential, belts cannot be employed, but the elasticity that disturbs the velocity ratio possesses the quality of acting as a cushion, modifying on one pulley any shocks, sudden strains, or jars existing on the other, while the longer the belt and less strained within the limit of elasticity, the greater this

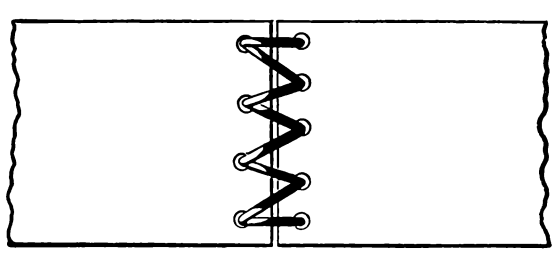

Fig. 2681.

power of modification; furthermore in case of a sudden or violent increase of load, the belt will slide on the pulley, and in most cases slip off it, thus preventing the breakage of parts of the driving gear or of the machine driven that would otherwise probably ensue. Furthermore, belt connections are lighter and cheaper than gear-wheel or other rigid and positive connections, and hence the wide application of leather belts for the transmission of power, notwithstanding the slight variations of pulley velocity ratio due to the unequal elasticity of the various parts of the leather composing the belt.

The ends of belts are joined by two principal methods, the butt and the lap joint. In butt joints the holes are pierced near the ends of the belts, and the ends of the belt are brought together by means of a leather lace threaded through these holes. If the duty is light a single row of holes is all that is necessary. An example of this kind is shown in Fig. 2681, in which there are five holes on one side, and four on the other of the joint, the extra hole coming in the middle of its end of the belt. The lace is drawn half-way through this extra hole, and laced each way to the side and back again to the middle, the ends being tied on the outside of the belt, which does not come in contact with the pulley surface. By this means the lacing is double through all the holes, and if the knot should slip the slackness will begin at the middle of the belt and extend gradually towards the edges; whereas, if the lacing terminated at one side, and the knot or fastening should slip, all the tension would be thrown on one edge of the belt, unduly stretching it, and rendering it liable to tear. By this

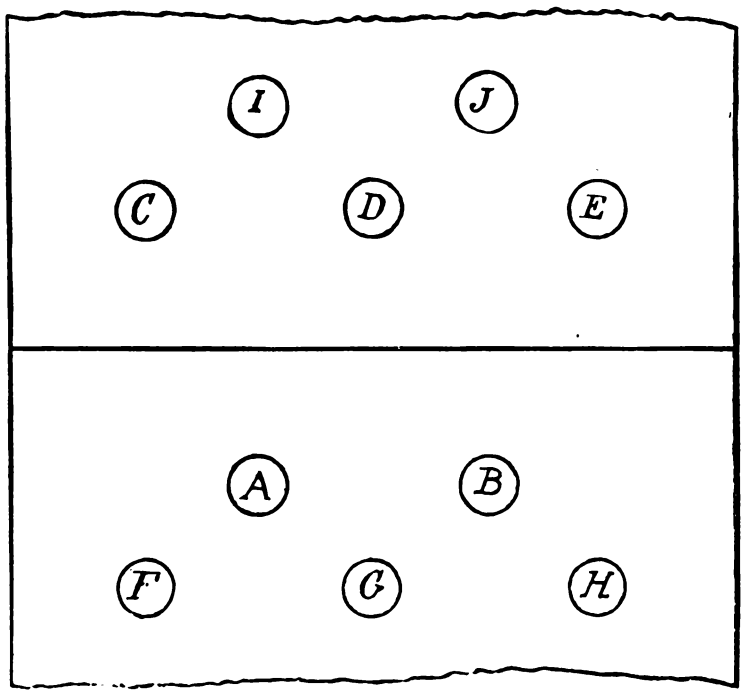

Fig. 2682.

method of lacing the lace is not crossed on either side of the belt, which is desirable, because it is found in practice that a crossed lace does not operate so well as an uncrossed one.

If the power to be transmitted is so much as to render it desirable to have the strength of the laced joint more nearly approach that of the solid belt than is obtainable with a single row of holes, a double row is provided, as shown in Fig. 2682.

For belts of about 3 inches wide and over, these holes are made as follows: A, B, and C, D, E, about an inch apart and $\frac{5}{8}$ inch from the line of joint; F, G, H, and I, J, being about $\frac{1}{2}$ inch behind A, B, and C, D, E, respectively.

For thinner belts the holes may be closer together, and to the edges of the belt the exact distances permissible being closer together as the duty is lighter; but however narrow the width of the belt, it should contain at least two holes on each side of the

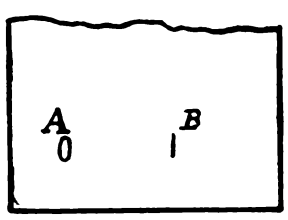

Fig. 2683.

joint. The sizes of these holes are an important element, since the larger the hole the more the belt is weakened. The following are the sizes of holes employed in the best practice:—

Width of Belt.	Size of Punched Hole.
Up to 4 inches	$\frac{1}{4}$ inch.
From 4 to 8 inches	$\frac{5}{16}$,,
From 8 inches upwards	$\frac{3}{8}$,,

The holes are usually made round, but from the pliability of the lace, which enables it to adapt itself to the form of the hole to a remarkable degree, it is not unusual to preserve the strength of a belt by making an oblong hole, as in Fig. 2683 at A, or a mere slit, as at B, which, from removing less material from the belt, leaves it to that extent stronger.

The ends of the belt should be cut quite square, and at a right angle to the edges, so that when the two ends are drawn together by the lace the edges of the belt will remain straight, and not curved, as they would do if either end of the belt were not cut at a right angle. Suppose, for example, that the ends of a belt were cut aslant, as in Fig. 2684, when laced up the edge of the belt would come as in Fig. 2685.

The holes must be punched exactly opposite to each other, or lacing the belt will bring the edges out of fair, as shown in Fig. 2686, the tension of the lace drawing the holes opposite to each other, irrespective of where the edges of the belt will come. If

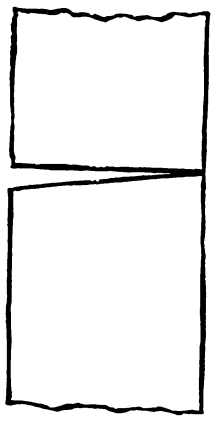

Fig. 2684.

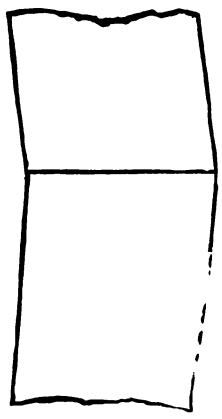

Fig. 2685.

some of the holes are opposite and others are not, the latter will throw the edges of the belt out of line to some extent, especially if the lace is first entered in the holes that are not opposite, because, in that case, drawing the lace tight at once throws the belt edges out, and the subsequent lacing has but a limited effect in correcting the error, unless, indeed, the majority of the holes are opposite, and but one or two are out of line.

The lace should be drawn sufficiently tight to bring the ends of the belt firmly together, and should be laced with an even tension throughout, and for a belt doing heavy duty should have its ends tied in a knot at the back, and in the middle of the belt.

The width of the lace is usually about as follows :—

Width of Belt.	Width of Lace.
24 inches and over	$\frac{1}{2}$ inch
6 to 24 inches	$\frac{3}{8}$ "
2 to 4 inches	$\frac{5}{16}$ "
2 inches and less	$\frac{1}{4}$ "

Since belts are tightened by cutting a piece off one end (preferably the end which shows the holes most stretched), it is obvious that a butt-joint possesses an advantage, because as less of the belt length is occupied by the holes they may be cut quite out and

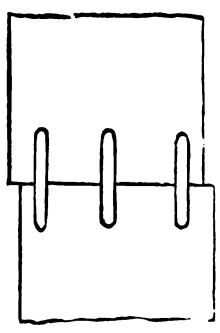

Fig. 2686.

new ones punched, whereas, in some cases, the length of the belt occupied by the holes in a lap-joint is more than the length of belt required to be cut out to tighten it.

There are many different methods of lacing a belt, but those here described are generally preferred. Thus referring to Fig. 2687 the lace is first passed through holes G and D, the ends being of equal length from the belt and emerging on the side that is to be the outside of the belt, thence each end of the lace is laced towards the edge of the belt, the dotted lines in the cut showing the path of the lace. It is then laced back to the middle of the belt, the second inside lacing exactly overlaying the first, the laces never crossing; the outside appearing as in Fig. 2688. The ends are in some cases tied in a knot on the outside, and in others fastened as shown in Fig. 2689, in which case the ends are merely held by friction, which will serve very well unless for a belt that is tightly strained.

By this method of lacing all the crossing of the lace is on the outside of the belt, which is an advantage, because from the creep

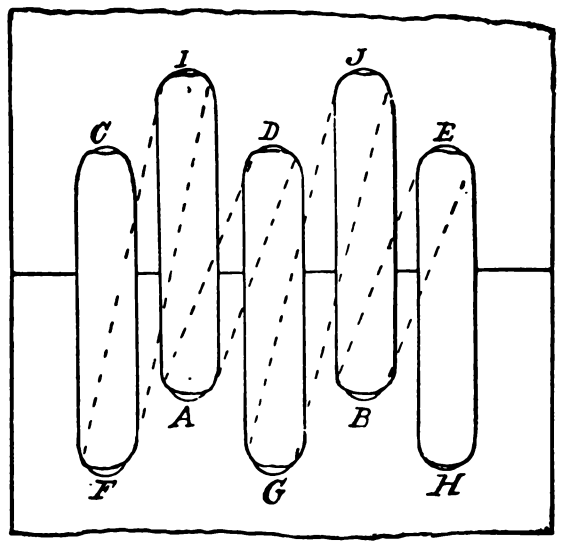

Fig. 2687.

of the belt the lace undergoes considerable friction, which is apt to rapidly wear out the lace, especially if it be crossed on the side of the bed that meets the pulley surface.

Fig. 2690 shows a method of lacing in which the crossing of the

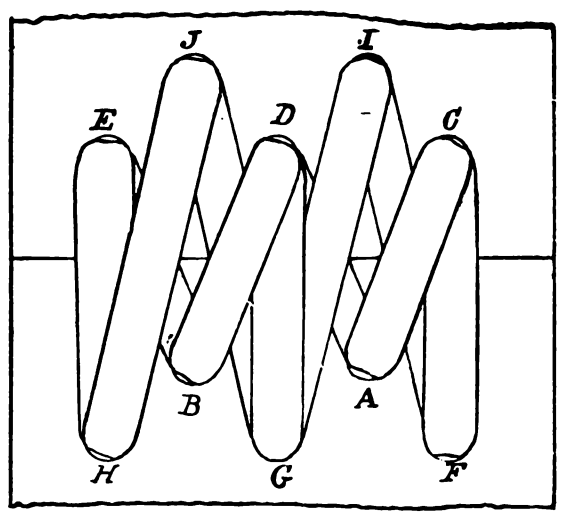

Fig. 2688.

lace is entirely avoided, the knot being on the outside at *a a*. The path of the lace on one side of the belt is shown in full lines, and on the other side in dotted lines.

The objections to lacing are that the lace lifts the belt from the

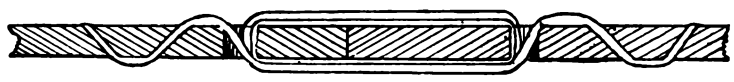

Fig. 2689.

pulley surface, which throws all the wear on the lace, causing it eventually to break, and which also reduces the area of belt (at the joint) in contact with the pulley surface and reduces the driving power of the belt at the time the joint is passing over the pulley. In fact, in running belts this reduction of transmitting capacity is not great, because of the rapidity with which the joint

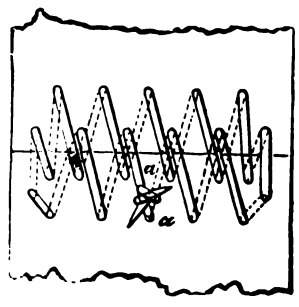

Fig. 2690.

passes over the pulley, but in slow moving belts slip is very apt to occur when the lace meets the pulley, especially if the power transmitted is great in proportion to the width of the belt.

There are considerable movement and friction between the lace and the belt, more especially when the latter passes over a pulley of small diameter, and this with the friction due to whatever amount of slip the belt may experience, wears away the lace so that in time it breaks. Sometimes a cover is employed as shown

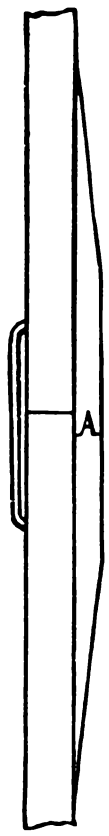

Fig. 2691.

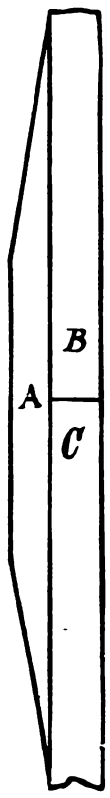

Fig. 2692.

in Fig. 2691 at A, to protect the lace, the cover being riveted or cemented to the belt on the side that is to meet the pulley surface. A similar means is also sometimes employed to make a butt joint. Thus in Fig. 2692 A is the cover riveted or cemented to the two ends B C, of the belt so as to dispense with lacing.

Fig. 2693 represents an excellent method of joining very thin belts, the operation being as follows :—

Place the two ends of the belt together with the edges fair one

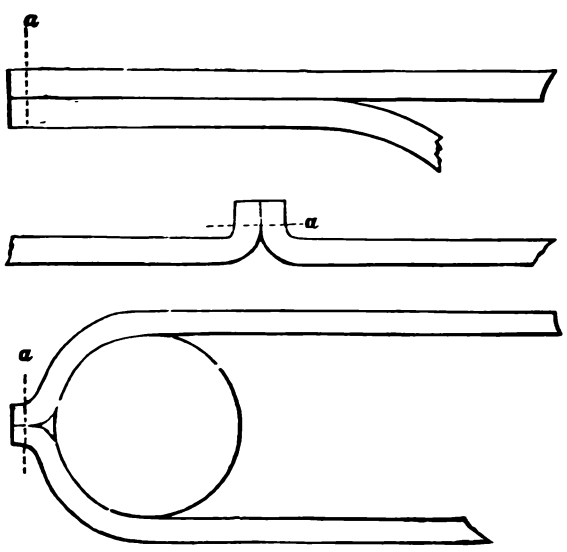

Fig. 2693.

with the other, and with an awl make a row of holes at *a*, through both ends ; then take about half a yard of strong twine (in some cases a lace or gut is better) and draw half the length through the first hole, then pass each end of the twine through the second hole, one end to the right and the other to the left, and draw both tight at the same time, and so on until the last hole is reached, when one end only of the twine is passed through ; the two ends of the twine are then knotted tight together and the excess cut off.

The middle sketch shows the joint when the belt is stretched. The lower sketch shows it passing over a small pulley, where it will be seen that in the act of bending over the curve there is no friction between the lace and the belt, and this is the reason of its superiority over other methods, where there is always more or less friction between the lace and the belt when bending over a curve. Another advantage is, that in this system the lace does not come into contact with the pulley, so that whatever friction or slipping may take place between the belt and the pulley, the lacing is perfectly unaffected by it.

A lap joint is one in which the two ends of the belt overlap, as in Fig. 2694. The overlap is cut down to a plain bevel so as to reduce the joint to nearly or quite the same thickness as the main body of the belt. The lap joint is employed to join together the strips of leather forming the belt, and to fasten the ends of the finished belt together. In making the belt the overlap is cemented and riveted, while in joining the ends it may be cemented, or riveted, or laced.

The advantage of rivets lies simply in that they are easily applied. Their disadvantages are that they grip but a small area of the belt, namely, that portion beneath the rivet head and washer surface ; hence, when rivets are used the joint should always be cemented also. A more important defect is, however,

Fig. 2694.

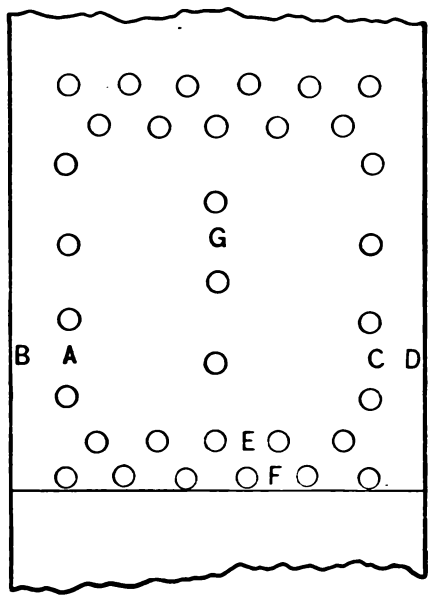

Fig 2695.

that the heat generated by the compression of the rivet while riveting it is sufficiently great to *burn the leather* beneath the rivet-head. The reason that the leather under the head and not under the washer or burr at the riveted end of the rivet burns is, that although the heat due to riveting is most at the burr end of the rivet, its passage from the rivet to the washer is less rapid than it is through the body of the rivet, because in the one case it has to be transferred from one body to another (from the rivet to the burr), while in the other its passage is uninterrupted and continuous.

Rivets for lap joints are usually placed about, as in Fig. 2695, the rows A and C being about $\frac{1}{2}$ inch from the edges B and D respectively, and the row F about $\frac{3}{8}$ inch from the edge F of the lap, while the rivets are about $\frac{5}{8}$ inch apart in the rows.

For comparatively narrow belts as, say, four inches wide, a single row G would be placed in the middle, additional middle rows should for wider belts be about $1\frac{1}{4}$ inches apart.

The rivet holes should be a close fit to the rivets, the latter being left just long enough to hold the washer or burr and sink with it, in the riveting, to the level surface of the belt.

The heads of the rivets should be on the side of the belt that is to run next to the pulley.

The strongest method of forming a belt is by means of small taper wooden pegs, such as are used in boot and shoe manufacture, the joint being cemented, and the pegs inserted. In this case the belt is merely pierced with an awl, hence none of the leather is removed.

The arrangement of wooden pegs should be as in Fig. 2696, the rows A and B being respectively about $\frac{5}{8}$ inch from the edges C D, the row E being about $\frac{1}{4}$ inch from the edge of the joint, and H about $\frac{3}{4}$ inch from that edge. The pegs are placed about $\frac{1}{2}$ inch apart in the rows.

A cemented and pegged joint is the strongest made, and it preserves a more equal tension throughout the belt than any other,

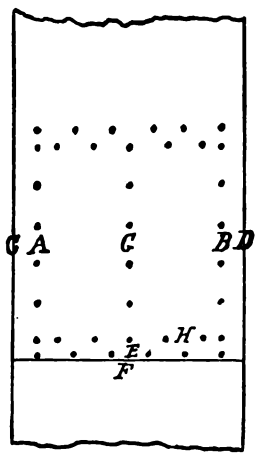

Fig. 2696.

while the belt is strong, since the hole for the pegs may be pierced with an awl, which does not remove any leather from the belt, as is the case with punched holes.

The length of the lap in some of the best practice is as follows:

When the strips of leather are cut from the hide in such lengths that the part termed the shoulder of the hide is utilised, a uniform lap of 8 inches is employed for all widths of belt. When the strips do not contain the shoulder of the hide, the following are the respective lengths of lap:—

Width of single belt.	Length of lap.
1 to $4\frac{1}{2}$ inches	$4\frac{1}{4}$ inches.
5 inches	5 "
6 to 8 inches	6 "
9 inches	$6\frac{1}{2}$ "
10 to 14 inches	7 "
15 to 24 "	8 "

All double belts are given a 6-inch lap.

Another and excellent method of joining a belt, or of fastening two thicknesses together to form a double belt, is to sew it together with lace leather, as shown in Fig. 2697. The lace is in this case

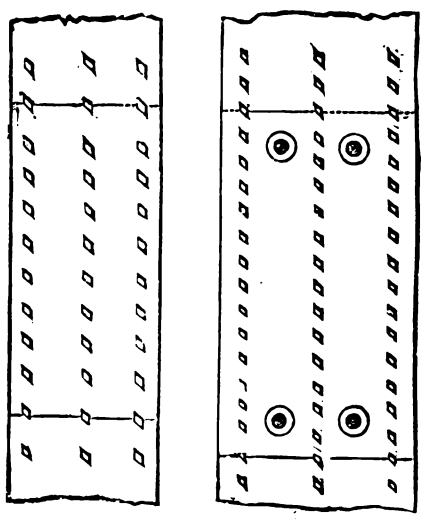

Fig. 2697.

about $\frac{1}{4}$ inch wide, the holes being pierced so as to have the lace diagonal, as shown in the cut. Sometimes four rivets are added at the joint as shown in the cut.

Other methods of fastening the ends of leather belts are by means of metal hooks of various forms. Fig. 2698 represents a fastening of this kind, the appearance of both sides of the joint being shown in the figure. In this case considerable leather is removed from the belt, but this is to some extent compensated for, because the hook holds each end of the belt in two places; that is to say, in the crook of the hook as well as at the end. This, however, while it has the effect of increasing the grip of the hook on the belt, still leaves the belt as a whole weaker, by reason of the removal of leather to form the holes.

In Figs. 2699 and 2700 is shown a belt screw, intended to take the place of rivets, and thus avoid the burning of the leather which accompanies the use of rivets. It consists of two screws, one having a right and the other a left-hand thread. The former is of bronze, and has a coarse exterior thread cut conically, while it is

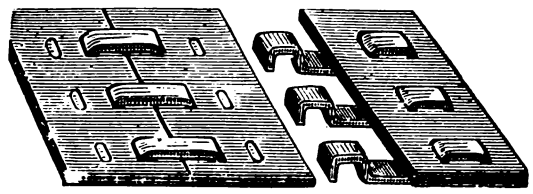

Fig. 2698.

hollow with a fine thread tapped inside. The latter is of steel, and has a conical shoulder underneath. The heads of both screws are slightly rounded and formed with circular grooves on the under side, to give them a firm grip on the leather. The conical screw is first run into the leather, and the steel screw is then introduced. The belt is run with the head of the latter on the inner side.

If the body of a narrow belt is riveted it contains two rows only of rivets; but as the width of the belt increases, other rows are introduced, all the rows running the entire length of the belt. In

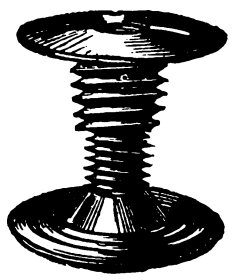

Fig. 2699.

some cases two separate single belts running one over or outside the other are employed in place of an ordinary double belt, and the arrangement works well.

Two single belts applied in this manner are especially preferable to a double belt when used upon a small pulley, because they will bend to the curvature of the pulley more readily, being more pliable; whereas a double belt will from its resistance to bending not envelop as much of the circumference of the belt as is due to the relative sizes of the pulleys, and the distance apart of their axes.

Round leather belts are made in two forms, the solid and the twisted. The first consists of a simple leather cord, hence its

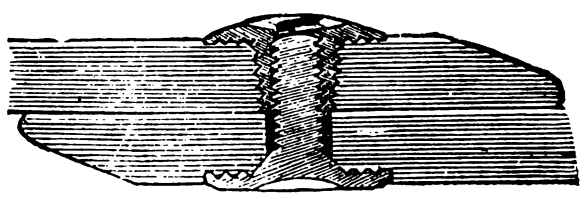

Fig. 2700.

diameter cannot exceed the thickness of the leather. The second consists of a strip of leather twisted into cylindrical form, the grain side of the leather being outside.

The ends of round belts are usually joined by means of cylindrical hooks and eyes, which are threaded so as to screw on to the end of the belt, but for twisted round belts it is better to place in the centre of the belt a small core of soft wood. The ends of the belt should be slightly tapered, and the hook and eye screwed firmly home. Sometimes from the smallness of the pulleys the inflexibility of the hook and eye becomes objectionable, and a simple hook is employed on solid round belting.

The length of twisted round belting may be altered by twisting

or untwisting it, which renders it unnecessary to cut the belt for a small amount of shortening.

Round belts should bear upon the sides, and not on the bottom of the pulley-groove, which increases their transmitting power. Thus, if the groove is a semicircle of the same radius as is the belt when new, the stretch of the belt as it wears decreasing its diameter, it will then touch only on the bottom of the groove. Furthermore, when the belt bears on the sides only of the groove it becomes wedged to a certain extent in the sides of the pulley groove.

V-belting is formed of strips of leather welted together, as shown in Figs. 2701 and 2702, the latter showing the joint or splice of the belt. The pulleys are V-grooved as shown. The tension

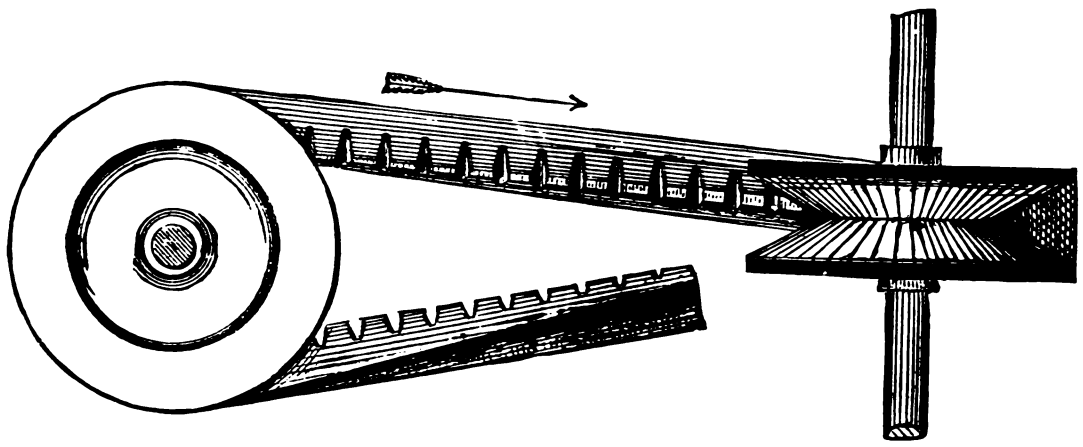

Fig. 2701.

of the belt causes it to grip the sides of the groove on the wedge principle, and the belt is flat at the apex of the V so that it shall not bottom in the groove, which would impair its wedging action. This class of belt is largely employed for connecting shafts at an angle, especially in cases where the distance between the shafts is small, in which case it will last much longer than a flat belt.

From the construction, the rivets joining the pieces forming the belt do not come into contact with the surfaces of the pulley, and

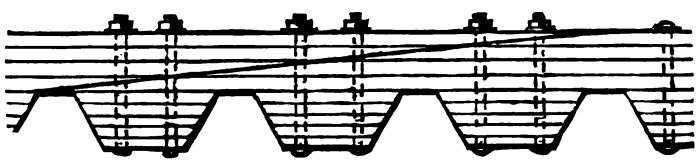

Fig. 2702.

from the tension of the belt causing it to wedge into the sides of the pulley groove, the driving power is greater than that simply due to the area of contact and the tension of the belt.

A belt will run to the largest diameter of a pulley, thus in Fig. 2703, the belt would, unless guided, gradually creep up to the side A of pulley P, and following this action would move to side C of pulley D.

If the pulleys are parallel, but the axis of their shafts are not in line, then the belt will run towards that side on which the axes are

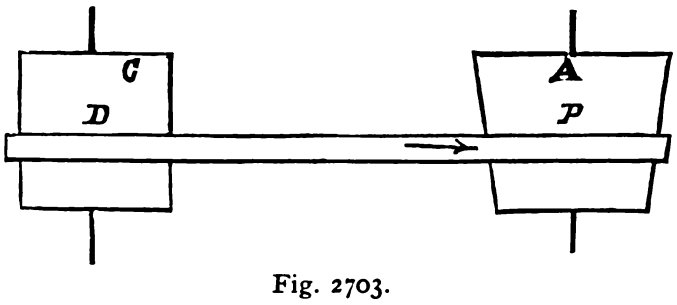

Fig. 2703.

closest; thus in Fig. 2704 the belt would run towards the side P of the large pulley, because the belt B will meet the pulley surface at *a*, and if a point on the belt at *b* travelled coincident with the point on the pulley with which it took contact, its plane of rotation, while on the pulley, would be as denoted by the dotted line *b*.

But to follow this plane of rotation, the belt would require to bend edgeways, as denoted by the dotted line *b*, which it does to some extent, carrying the belt with it.

CHANGING OR SLIPPING BELTS ON PULLEYS.—To change a belt on a stepped cone, proceed as follows:—

Suppose the belt to be on the small step of the driving cone, and to require to run on the largest step. Throw the belt on the smallest step of the lower cone and place the palm of the hand on the inside face of the belt on the side on which it approaches that cone. Draw the belt tight enough (with the palm of the right hand) to take up the slack and cause the lower cone to rotate. When it is in full motion place the palm of the left hand against the inside face of the other side of the belt (while still keeping the pressure of the right hand against the slack side of the belt). Release suddenly the pressure of the right hand and immediately with a quick and forcible lateral motion of the left hand force the belt towards the larger step of the upper cone, which will cause it to mount the next step, when the operation may be repeated for each succeeding step.

If the steps of the cone are too steep, or the belt is too long for this method, a wooden rod may be used, its end being applied to the side of the belt that runs on the upper cone and close to the cone. Then lift the belt with the rod, while the lower end of the rod is inclined away from the step the belt is to mount, when the belt will mount the step of the rotating cone.

In the case of broad heavy belts it is best to stop the running pulley and place the belt on it, then lift the belt edge on the stationary pulley at the point where the belt will first meet it

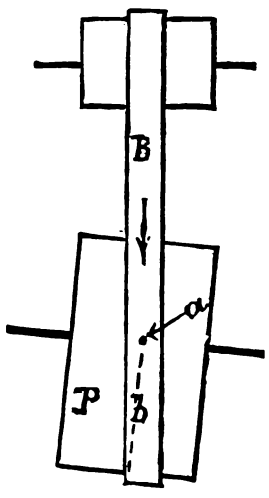

Fig. 2704.

when in motion, forcing the belt on by hand as far as possible. Take a strong cord, as, say ⅜ inch diameter, and double it, pass the loop between the pulley arms around the belt and over the pulley face. Pass the two free ends of the cord through the loop (formed by doubling the cord) and pull the free ends as tight as possible by hand. While standing on the side of the pulley opposite to that of the belt, communicate slow motion to the driving pulley and release the ends of the cords as soon as the belt is on. The belt, in travelling from the pulley, will then undo the cord of itself.

A belt may be taken off a pulley, either by pressing it in the required direction and as close to the pulley as possible, or by

holding the two sides of the belt together, which should be done as far from the running pulley as possible, or as far from the pulley the belt is required to come off as possible.

In Fig. 2705 is shown a device for automatically replacing a belt that has slipped off a pulley. A is the pulley and B the device, which has a curved projection which is of the full width of the device at one end, where it comes even with the perimeter of A, and tapers laterally towards the outside edge of the device. As a result the belt will easily pass on the broad end and cause the device to rotate, the belt running up the curved projection and therefore lifting clear of the pulley A, but on account of the taper of the projection the belt finally has contact with the projection on one edge only, and therefore tips over to the other side, and as a result falls on A, because it is under tension and naturally adjusts itself to be in line with the pulley at the other end of the belt. It would appear that the belt, if running, would move on the pulley, driving it, and this would be the case if sufficient time were allowed for it to do so, but the action of the device is too quick, and furthermore, when the belt is off one pulley and therefore loose its motion is apt to become greatly reduced, which retards its moving laterally on the pulley driving it.

It is obvious that the device must be applied to that side of the pulley on which the belt is found to run off, but it may be noted that belts are not apt to run off the loose pulley, but off the driving one, and only at times when from excessive resistance or duty the velocity of the pulley is reduced below that of the belt, or the velocity of the belt is less than that of the pulley driving it;

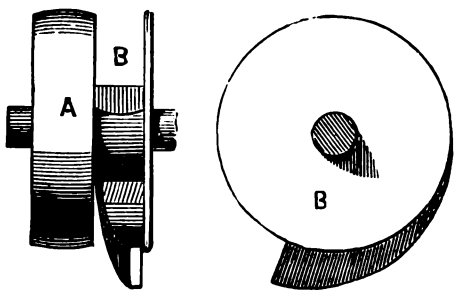

Fig. 2705.

hence the device must be applied on the outside of the fast or tight pulley.

The driving power of a belt is determined principally by the amount of its pull upon the pulley, and the speed at which it travels.

The amount of pull is determined by its tension, or in other words, the degree with which it grips the pulley and the closeness with which it lies to the pulley surface. The amount of tension a single belt is capable of withstanding with a due regard to its durability has been fixed by various experimenters at $66\frac{2}{3}$ lbs. per inch of its width. The pull of the belt under this degree of tension will vary as follows:—

It will be more with the grain or smooth side than it will with the flesh or fibrous side of the belt in contact with the pulley face, some authorities stating the amount of difference to be about 20 per cent. It will be more with a smooth and polished surface on the pulley than with one less smooth and polished. At high speeds it will be diminished by the interposition of air between the belt and pulley surface, and from the centrifugal force generated by the passage of the belt around the pulley. It will be more when the pulley is covered with leather rubber or other cushioning substance than when the pulley is bare, even though it be highly polished, some authorities stating this difference to be about 20 per cent.

It will be increased in proportion as the belt envelops a greater proportion of the pulley circumference, the part of the pulley enveloped by the belt when the pulley is at rest (or what is the same thing, at any point of time when it is in motion) being termed the arc of contact.

It is obvious that the arc of contact taken to calculate the belt power must be the least that exists on either the driving or the driven pulley, because when the belt slips it ceases to transmit the full amount of the power it receives, the remainder being expended in the friction caused by the belt slipping over the pulley.

The speed at which a belt may run is limited only by reason of the centrifugal force generated during its passage around the pulley, this force tending to diminish its pressure upon the pulley. The maximum of speed at which it is considered advisable to run a belt is about 6,000 feet per minute; but the amount of centrifugal force generated at this speed depends upon the diameter of the pulley, because the centrifugal force increases in direct proportion as the number of revolutions is increased, or in other words it increases in the same proportion as the velocity; but in a given circle it increases as the square of the velocity. Suppose, then, that it be required to double the velocity of a belt, and that the same pulley be used running at twice the velocity, this will increase fourfold the centrifugal force generated; but if the diameter of the pulley be doubled the centrifugal force generated will be simply doubled; hence it appears that the larger the pulley the less the centrifugal force of the belt in proportion to its velocity. This will be apparent when it is considered that the larger the pulley the nearer will the curve of its circumference approach to a straight line.

The following experiments on the transmission of power by belting were made Messrs. Wm. Sellers & Co.

* These experiments were undertaken with a view to determine, under actual working conditions, the internal resistances to be overcome, the percentage of slip, and the coefficient of friction on belt surface. They were conducted, during the spring of 1885, under the direction of Mr. J. Sellers Bancroft.

These experiments seemed to show that the principal resistance to straight belts was journal friction, except at very high speeds, when the resistance of the air began to be felt. The resistance from stiffness of belt was not apparent, and no marked difference could be detected in the power required to run a wide double belt or a narrow light one for the same tension at moderate speeds. With crossed and quarter-twist belts the friction of the belt upon itself or upon the pulley in leaving it was frequently an item of more importance, as was shown by special experiments for that purpose.

In connection with the experiments upon internal resistances, some interesting points were noted. Changes in tension were made while the belt was running, commencing with a very slack belt and increasing by definite amounts to the working strength. As this point was approached, it was found necessary, to maintain a constant tension, that the tightening bolt should be constantly operated on account of stretch in the belt. Then, again, as the tension was reduced from this limit, it was found that at lower tensions the belt would begin to shrink and tighten for a fixed position of the sliding frame. This stretching and tightening would continue for a long time, the tightening being, of course, limited, but the stretching indefinite and unlimited.

The first series of experiments was made upon paper-coated pulleys 20" diameter, which carried an old $5\frac{1}{2}$" open belt $\frac{3}{16}$" to $\frac{1}{4}$" thick and 34 ft. long, weighing 16 lbs. The arc of contact on the pulleys has been calculated approximately from the tension on slack side, and for this purpose the width and length of the belt were taken. The percentage of slip must be considered as equally divided between the two pulleys, and from observations made it is easy to calculate the velocity of sliding when the speed is given.

Some of the most important results obtained with this belt are given in Table I. in which the experiments have been selected to avoid unnecessary repetition. In all cases the coefficient of friction is shown to increase with the percentage of slip. The adhesion on the paper-covered pulleys appears to be greater than on the cast-iron surfaces, but this difference may possibly have been due to some change in the condition of the belt surfaces.

After a fresh application of the belt dressing known as "Beltilene," the results obtained are even higher on cast iron than on

* From a paper read before the American Society of Mechanical Engineers by Wilfred Lewis.

paper surfaces, but after a time it was found that the adhesive property of this substance became sensibly less and less. Flakes of a tarry nature rolled up from the belt surface and deposited themselves on the pulleys, or scaled off.

So much was found to depend upon the condition of the belt surface and the nature of the dressing used, that the necessity was felt for experiments upon some standard condition which could be easily realized and maintained. For this purpose a belt was taken from a planing machine when it had become perfectly dried by friction. The results of experiments upon this belt are given in Table II. When dry, as used on the planer, the coefficients for any given percentage of slip were much smaller than those given in Table I. This was naturally to be expected, and

TABLE I.

STRAIGHT OPEN BELT $5\frac{1}{2}''$ WIDE BY $\frac{7}{32}''$ THICK AND 34 FT. LONG, WEIGHING 16 LBS., IN GOOD PLIABLE CONDITION, WITH HAIR SIDE ON PULLEYS 20 IN. DIAM. RUNNING AT 160 R. P. M., OR ABOUT 800 FT. PER MINUTE.

No. of Experi'nt.	Sum of Tensions. $T+t$ Initial.	Working.	Final.	* $T-t$ Working.	* T	* t	* $\frac{T}{t}$	Percentage of Slip.	Velocity of Slip in ft. per minute.	Arc of Contact.	Coefficient of Friction.	Remarks.
17	200	210		100	[illegible]	55	2.82	.4	1.6	177°	.336	Paper-covered pulleys.
19		220		140	[illegible]	40	4.50	.6	[illegible].4	176	.490	
21		246		180	[illegible]13	33	6.45	1.2	4.8	175	.610	
22		260		200	230	[illegible]0	7.67	2.6	[illegible].4	174	.671	
23		270	180	220	245	25	9.80	7.9	[illegible].6	173	.756	
24	300	316		200	258	58	4.45	.7	2.8	177	.483	
27		344		260	302	42	7.20	1.0	4	176	.643	
28		350		280	315	35	9	1.8	7.2	175	.719	
29		364		300	332	32	10.4	2.8	11.2	175	.784	
30		380	260	320	350	30	11.7	5.5	22	175	.805	
31	400	422		200	211	111	1.90	.5	2	179	.205	
33		440		280	360	80	4.50	.8	3.2	178	.484	
35		470		360	415	55	7.54	1.1	4.4	177	654	
36		506		400	453	53	8.54	2.1	8.4	177	.694	
37		520	380	420	470	50	9.40	5	20	177	.725	
60	200	205		80	147.5	67.5	2.18	.5	2	178	.251	Cast-iron surfaces.
61		210		100	155	55	2.82	.9	3.6	177	.336	
62		215		120	167.5	47.5	3.52	1.7	6.8	177	.407	
63		220		140	180	40	4.50	3	12	176	.490	
65		246	180	180	213	33	6.45	12	48	175	.610	
66	300	300		120	210	90	2.33	.5	2	179	.270	
68		310		160	235	75	3.13	.8	3.2	179	.365	
69		315		180	247.5	67.5	3.67	1	4	178	.418	
70		320		200	260	60	4.33	1.7	6.8	178	.472	
71		325		220	272.5	52.5	5.19	2.6	10.4	177	.545	
72		340		240	290	50	5.80	3.8	15.2	177	.569	
73		350		260	305	45	6.77	5.5	22	176	.623	
74		360		280	320	40	8	8.6	34.4	176	.677	
75		375		300	337.5	37.5	9	15.2	60.8	175	.719	
76	400	420		200	310	110	2.82	.6	2.4	179	.336	Belt dressed with "Beltilene."
78		460		280	370	90	4.11	1	4	179	.452	
81		480		340	410	70	5.86	1.5	6	178	.569	
84		510		400	455	55	8.27	2.2	8.8	177	.684	
86		535		440	487.5	47.5	10.2	4.5	18	177	.760	
88		560	385	480	520	40	13	8.4	33.6	176	.834	
89	300	320		120	220	100	2.20	.4	1.6	179	.252	
93		350		200	275	75	3.67	.8	3.2	178	.418	
97		390		280	335	55	6	1.6	6.4	177	.580	
101		440		360	400	40	10	3.1	12.4	176	.750	
104		470	310	420	445	25	17.8	8.6	34.4	173	.953	

* T represents the tension on the tight part, and t on the sag part of the belt.

the experiments were continued to note the effect of a belt dressing in common use, known as "Sankey's Life of Leather," which was applied to the belt while running. At first, the adhesion was very much diminished, but it gradually increased as the lubricant became absorbed by the leather, and in a short time the coefficient of friction had reached the unprecedented figures of 1.44 and 1.37.

An interesting feature of these and subsequent experiments is the progressive increase in the sum of the belt tensions during an increase in load. This is contrary to the generally accepted theory that the sum of the tensions is constant, but it may be accounted for to a large extent by the horizontal position of the belt, which permitted the tension on the slack side to be kept up by the sag. That this is only a partial explanation of the phenomenon, and that the sum of the tensions actually increases as their difference increases for even a vertical position of the belt, will be shown by a special set of experiments. If a belt be suspended vertically, and stretched by uniformly increasing weights, it will also be found that the extension is not uniform, but diminishes as the load is increased, or, as already stated, the stress increases faster than the extension. A little reflection will show that when this is the case the tensions must necessarily increase with the load transmitted.

TABLE II.

DOUBLE BELT $2\frac{1}{4}''$ WIDE BY $\frac{5}{16}''$ THICK, AND 32 FT. LONG, WEIGHING $9\frac{1}{2}$ LBS., ON 20" CAST-IRON PULLEYS. THIS BELT HAD BEEN USED ON A PLANING MACHINE, WAS QUITE PLIABLE, DRY, AND CLEAN. 160 R. P. M.

No. of Experi'nt.	Sum of Tensions. $T+t$ Initial.	Working.	Final.	$T-t$ Working.	T	t	$\frac{T}{t}$	Percentage of Slip.	Velocity of Slip in ft. per min.	Arc of Contact.	Coefficient of Friction.	Remarks.
105	100	104		40	72	32	2.25	.3	1.2	177°	.263	
106		110		60	85	25	3.40	.8	3.2	177	.395	
107		122		80	101	21	4.81	1.7	6.8	176	.511	
108		138		100	119	19	6.26	4.3	17.2	175	.600	
109	200	208		80	144	64	2.25	.4	1.6	179	.260	
110		212		100	156	56	2.81	.7	2.8	179	.331	
111		216		120	168	48	3.50	1	4	179	.401	
112		220		140	180	40	4.50	1.8	7.2	178	.484	
113		230		160	195	35	5.57	4.4	17.6	178	.553	
114	300	308		120	214	94	2.28	.4	1.6	180	.262	
116		316		160	238	78	3.05	.8	3.2	180	.355	
118		322		200	261	61	4.28	1.6	6.4	179	.465	
119		330	285	220	275	55	5	2.6	10.4	179	.516	
121	400	404		160	282	122	2.31	.7	2.8	180	.267	
124		410		220	315	95	3.37	1.5	6	180	.387	
125		412		240	326	86	3.79	2.3	9.2	180	.424	
126		414		260	338	78	4.33	3.7	14.8	179	.469	
127		416	370	280	348	68	5.12	10.1	40.4	179	.523	Belt almost slipped off.
128	500	516		200	358	158	2.27	.5	2	180	.261	
131		520		260	390	130	3	1.1	4.4	180	.350	
133		525		300	412.5	112.5	3.67	1.8	7.2	180	.414	
134		525		320	422.5	102.5	4.11	2.7	10.8	180	.450	
135		525	460	340	432.5	92.5	4.67	5.1	20.4	180	.490	
136	100	105		40	72.5	32.5	2.02	.2	.8	177	.228	Here the belt was coated with "Sankey's Life of Leather," and run until in good working condition before noting experiments.
137		110		60	85	25	3.40	.4	1.6	177	.396	
138		125		80	102.5	22.5	4.56	.6	2.4	176	.494	
140		150		120	135	15	9	1.8	7.2	174	.723	
141		164		140	152	12	12.7	2.8	10.8	172	.779	
142		180		160	170	10	17	5	20	170	.954	
144		215		200	207.5	7.5	27.7	7.3	29.2	166	1.15	
146		250		240	245	5	49	10.6	42.4	158	1.41	
147		270	90	260	265	5	53	17.7	70.8	158	1.44	
149	100	105		40	72.5	32.5	2.02	.2	.8	177	.228	Three days later without any additional dressing.
150		110		60	85	25	3.40	.3	1.2	177	.396	
151		120		80	100	20	5	.4	1.6	176	.524	
153		150		120	135	15	9	.7	2.8	174	.723	
155		182		160	171	11	15.5	1.2	4.8	172	.913	
156		202		180	191	11	17.3	3	12	172	.950	
157		216		200	208	8	26	5.8	23.2	167	1.12	
158		232		220	226	6	37.3	7	28	161	1.29	
159		252		240	246	6	41	9.8	39.2	161	1.32	
161		292		280	286	6	47.7	13.7	54.8	161	1.37	

A piece of belting 1 sq. in. in section and 92 ins. long was found by experiment to elongate $\frac{1}{4}$ in. when the load was increased from 100 to 150 lbs., and only $\frac{1}{8}$ in. when the load was increased from 450 to 500 lbs. The total elongation from 50 to 500 lbs. was $1\frac{11}{16}''$, but this would vary with the time of suspension, and the measurements here given were taken as soon as possible after applying the loads. In a running belt the load is applied and removed alternately for short intervals of time, depending upon the length and speed of the belt, and the time for stretching would seldom be as great as that consumed in making the experiments just mentioned.

The differences between the initial and final tensions unloaded, as given in the tables, show the effect of extension or contraction during the course of the experiments made at a fixed position of the pulleys. The percentage of elongation which a belt undergoes in passing from its loose to its tight side, is the measure of the slip which must necessarily take place in the transmission of power. This is a direct loss, and within the assumed working strength of 500 lbs. per sq. in. for cemented belts without lacings, experiment indicates that it should not exceed $1\frac{1}{2}$ or 2 per cent. When, therefore, an experiment shows less than 2 per cent. of slip, the amount may be considered as allowable and proper, and the belt may be relied upon to work continuously at the figures given.

Table III. gives the results of experiments upon a soft and pliable rawhide belt made by the Springfield Glue and Emery Co. This belt had been used by the Midvale Steel Co. for a period of seven months, at its full capacity, and was sent in its usual working condition to be tested. It had been cleaned and dressed with

castor oil at intervals of three months, and was received three weeks after the last dressing. Commencing with the light initial tension of 50 lbs. on a side, it was found impossible with the power at command to reach a limit to the pulling power of the belt, and in order to do so the experiment was made of supporting the slack side of the belt upon a board to prevent sagging.

These experiments, however, are subject to an error arising from the friction of the belt upon the board, the amount of which was not determined. All of the experiments, in fact, are subject to slight errors which were extremely difficult to eliminate or properly allow for, but an effort has been made throughout to obtain results which should approximate as closely as possible to the truth. The sum of the tensions, as determined by measuring scales, was subject only to errors in observation. This part of the apparatus was carefully tested by a horizontal pull of known amount and made to register correctly.

The difference of the tensions $T-t$, as computed from the reading of the scales, was measured by the force of an equivalent moment at 20″ radius. This moment, divided by the radius of the pulley was taken to be the difference $T-t$.

In this calculation, it will be noticed that two slight corrections have been omitted which are opposite in effect and about equal in degree. One is the friction of the brake shaft in its bearings, which of course was not recorded on the scales, and the other is the thickness of the belt which naturally increases the effective radius of the pulley. Both of these errors are somewhat indefinite, but the correctness of the results obtained was tested in a number of cases by the sag of the belt, and the tension t, as calculated from the sag, was found to agree closely with the tension calculated by the adopted method.

As the limiting capacity of the belt was reached, the difficulty of obtaining simultaneous and accurate observations was increased by the vibrations of the scale beams. This was apparently due to irregularity in the slip, and it was only by the use of heavily loaded beams and a dash-pot that readings could then be taken at all. The dash-pot consisted of a large flat plate suspended freely in a bucket of water by a fine wire from the scale beam. This provision, however, was applied only to the scales on which the vibrations were more pronounced.

A peculiar and important feature of Tables III. and IV. is the

TABLE III.

RAWHIDE BELT 4″ WIDE BY $\frac{9}{32}$″ THICK AND 31 FT. LONG, WEIGHING 15 LBS. 160 R. P. M. ON 20″ CAST-IRON PULLEYS.

No. of Experi'nt.	Sum of Tensions. $T+t$ Initial.	Working.	Final.	$T-t$ Working.	T	t	$\frac{T}{t}$	Percentage of Slip.	Velocity of Slip in ft. per min.	Arc of Contact.	Coefficient of Friction.	Duration of run at time of experiment.	Remarks.
171	100	118		40	79	39	2.03	.2	.8	1778	.229		
173		140		80	110	30	3.67	.4	1.6	176	.423		
175		168		120	144	24	6	.6	2.4	174	.590		
177		202		160	181	21	8.62	.8	3.2	172	.661		
179		232		200	216	16	13.5	1	4	170	.897		
181		268		240	254	14	18.1	1.2	4.8	167	.993		
183		302		280	291	11	26.5	1.4	5.6	163	1.15		
184		318	110	300	309	9	34.3	1.6	6.4	160	1.27		
185	100	150	115	140	145	5	29	1.6	6.4	180	1.02		Slack side of belt running on a board to prevent sagging.
186	200	258		240	249	9	27.4	1.2	4.8	180	1.05		
188		290		280	285	5	57	2.2	8.8	180	1.29		
189	300	412		400	406	6	67.7	1.7	6.8	180	1.34		
190		428		420	424	4	106	1.8	7.2	180	1.48		
191		446	275	440	443	3	148	3.3	13.2	180	1.59		
192	400	570	360	560	565	5	113	2	8	180	1.47		
329	100	110		40	75	35	2.14	.3	.6	177	.246		10″ cast-iron pulleys.
330		135		80	107.5	27.5	3.90	.6	1.2	175	.446		
331		198		160	179	19	9.42	1	2	171	.751		
332		275		240	257.5	17.5	14.7	1.5	3	169	.911		
334		345		320	232.5	12.5	18.6	2	4	165	1.01		
336		420	110	400	410	10	41	3.2	6.4	162	1.31		
339	200	230		160	195	35	5.86	.8	1.6	176	.576		
340		360		320	340	20	17	1.6	3.2	171	.949		
341		435		400	417.5	17.5	23.8	2	4	169	1.07		
342		505		480	492.5	12.5	39.4	2.7	5.4	165	1.28		
343		590	200	560	575	15	38.3	5	10	168	1.24		
344	300	400		320	360	40	9	1.4	2.8	175	.719		
345		450		400	425	25	17	1.7	3.4	173	.938		
346		520		480	500	20	25	2.1	4.2	171	1.08		
347		600		560	570	10	57	3	6	162	1.43	1 min.	
348		600	280	560	570	10	57	3.4	6.8	162	1.43	5 min.	
350	400	500		400	450	50	9	1.6	3.2	176	.715		
351		550		480	515	35	14.7	1.8	3.6	175	.880		
352		605		560	577.5	17.5	21.3	2.3	4.6	169	1.04		
353		680		640	660	20	33	3.2	6.4	171	1.17	1 min.	
354		680		640	660	20	33	3.7	7.4	171	1.17	5 min.	
355		680		640	660	20	33	4.1	8.2	171	1.17	10 min.	[4 m. later.
356		680		640	660	20	33	6.1	12.2	171	1.17	15 min.	Belt slipped off
357		600		560	580	20	29	10	20	171	1.13	20 min.	Continuing.
358		600		560	580	20	29	17.2	34.4	171	1.13	25 min.	
359		530		480	505	25	20.2	5.2	10.4	173	.955	30 min.	
360		530	350	480	505	25	20.2	2.8	5.6	173	.955	35 min.	
361	500	570		400	485	85	5.71	1.3	2.6	178	.561		
364		700		640	670	30	22.3	2.3	4.6	174	1.02		
365		755		720	637.5	17.5	36.4	3.2	6.4	169	1.22		
366		820		800	810	10	81	6.6	13.2	162	1.55		Belt slipped off 2 m. later.
367		750		720	735	15	49	5.1	10.2	168	1.32	1 min.	
368		750		720	735	15	49	11	22	168	1.32		
369		690		640	665	25	26.6	12	24	173	1.09	5 min.	Belt slipped off 3 m. later.
370		610		560	585	25	23.4	14.4	28.8	173	1.05	1 min.	
371		610		560	585	25	23.4	20	40	173	1.05	4 min.	
372		550		480	515	35	14.7	7.4	14.8	175	.880	1 min.	
373		550	410	480	515	35	14.7	2.3	4.6	175	.880	5 min.	
374	600	680		480	580	100	5.8	1.5	3	178	.566		
376		755		640	697.5	57.5	12.1	2.1	4.2	177	.807		
378		850		800	825	25	33	2.8	5.6	173	1.16	1 min.	
379		850		800	825	25	33	3.5	7	173	1.16	5 min.	Belt slipped off
380		780		720	750	30	25	8.8	17.6	174	1.06	1 min.	5 m. later.
381		680		560	620	60	10.3	11.2	22.4	177	.755	5 min.	
382		680		560	620	60	10.3	2	4	177	.755		After running
383		730		640	685	45	15.2	2.5	5	176	.886	1 min.	5 minutes at
384		730		640	685	45	15.2	2.4	4.8	176	.886	5 min.	$T-t=560$.
385		780		720	750	30	25	4.6	9.2	174	1.06	1 min.	
388		780	550	720	750	30	25	8.8	17.6	174	1.06	5 min.	
389		780		720	750	30	25	4	8	174	1.06	1 min.	Belt scraped.
390		780		720	750	30	25	6.4	12.8	174	1.06	5 min.	Belt slipped off
391		730		640	685	45	15.2	3.7	7.4	176	.886	1 min.	2 m. later.
392		730	550	640	685	45	15.2	3.9	7.8	176	.886	5 min.	
396	600	680		400	540	140	3.86	2	.45	179	.432		18 r. p. m. 10″
397		820		720	770	50	15.4	17.2	3.87	176	.890		cast-iron pul-
398		750		640	695	55	12.6	15	3.37	177	.874		leys.
399		700		560	630	70	9	9.4	2.17	177	.711		
400		670		480	575	95	6.05	4.5	1.12	178	.579		
401		630	550	400	515	115	4.48	3.5	.75	178	.483		
402		830		720	775	55	14.1	26	5.85	177	.856		
403		630		320	475	155	3.06	1.5	.30	179	.358		
404		610		60	335	275	1.22	.7	.16	180	.063		
408	600	610		120	365	245	1.49	.2	.09	180	.127		20″ cast-iron
413		660		400	530	130	4.08	1	.45	179	.450		pulleys. 18
415		710		560	635	75	8.46	1.9	.86	177	.691		r. p. m.
416		750		640	695	55	12.6	3.2	1.44	177	.820		
417		800		720	760	40	19	3.8	1.71	175	.964		
418		340		200	274	70	3.91	.6	.27	177	.441		
419	300	380		280	330	50	6.6	1.2	.54	176	.614		
421		450		400	425	25	17	3.2	1.44	173	.938		
423		515		480	497.5	17.5	28.4	4	1.8	169	1.13		
425		580		560	570	10	57	5	2.25	162	1.43		
427		695		680	687.5	7.5	91.7	7	3.15	155	1.67		

TABLE IV.

DOUBLE OAK-TANNED LEATHER BELT 4″ WIDE BY $\frac{5}{16}$″ THICK AND 30 FT. LONG, WEIGHING 17 LBS., ON 10″ CAST-IRON PULLEYS. 160 R. P. M.

No. of Experi'nt.	Sum of Tensions. $T+t$ Initial.	Working.	Final.	$T-t$ Working.	T	t	$\frac{T}{t}$	Percentage of Slip.	Velocity of Slip in ft. per min.	Arc of Contact.	Coefficient of Friction.	Duration of run at time of experiment.	Remarks.
209	120	120		48	84	36	2.33	.4	.8	176°	.275		
210		140		80	110	30	3.67	.6	1.2	175	.426		
211		168		120	144	24	6	.9	1.8	174	.590		
212		198		160	179	19	9.42	1.6	3.2	170	.756		
213		235		200	217.5	17.5	12.4	2.3	4.6	174	.829		
214		270		240	255	15	17	3.2	6.4	168	.966		[dle of belt.
215		310		280	295	15	19.7	5.1	10.2	168	1.02		Sag 10″ at mid-
216		345	122	320	332.5	12.5	25.8	9.4	18.8	164	1.13		Finally slipped off.
217	200	200		48	124	76	1.63	.4	.8	179	.156		
219		240		160	200	40	5	1	2	176	.524		
220		360		320	340	20	17	2.7	5.4	170	.954		
221		430		400	415	15	27.7	15	30	167	1.13		
222	300	318		160	239	79	3.03	.8	1.6	179	.354		
223		350		240	295	55	5.36	1.2	2.4	177	.543		
224		400		320	360	40	9	2	4	175	.719		
225		470		440	455	15	30.3	8	1.6	167	1.17		Belt finally
226		450		400	425	25	17	4	8	172	.943	1 m.	slipped off.
227		450		400	425	25	17	8	16	172	.943	5 m.	
228		450		400	425	25	17	17.3	34.6	172	.943	10 m.	Belt slip'd off.
229		418		360	389	29	13.4	3	6	173	.859	15 m.	Continuing.
230	400	405		160	282.5	122.5	2.30	.8	1.6	179	.267		
232		455		320	387.5	67.5	5.74	1.4	2.8	177	.566		
233		495		400	447.5	47.5	9.42	1.9	3.8	176	.730	1 m.	
234		495	370	400	447.5	47.5	9.42	2.1	4.2	176	.730	5 m.	
235		560		480	520	40	13	2.7	5.4	175	.859	Start.	
236		560		480	520	40	13	4.5	9	175	.859	5 m.	
237		560		480	520	40	13	7.5	15	175	.859	10 m.	
238		550	380	480	465	85	5.47	20	40	178	.547	15 m.	
239	400	560		480	520	40	13	3.4	6.8	175	.859	1 m.	After running 5 m. without load.
240	500	610		480	545	65	8.38	2.1	4.2	177	.688	1 m.	
241		610		480	545	65	8.38	2.5	5	177	.688	5 m.	
242		660		560	610	50	12.2	3.2	6.4	176	.814	1 m.	
243		655		560	607.5	47.5	12.8	8.4	16.8	176	.830	5 m.	Belt slipped off 2 m. later.
244	600	700		560	630	70	9	1.9	3.8	177	.711	1 m.	
245		700		560	630	70	9	2.1	4.2	177	.711	5 m.	
246		690	550	560	625	65	9.69	2.3	4.6	177	.735	10 m.	

TABLE IV.—*Continued.*

No. of Exper'nt.	Sum of Tensions. $T+t$ Initial.	Working.	Final.	$T-t$ Working.	T	t	$\frac{T}{t}$	Percentage of Slip.	Velocity of Slip in ft. per min.	Arc of Contact.	Coefficient of Friction.	Duration of run at time of experiment.	Remarks.
247	600	750		600	675	75	9	2.2	4.4	177°	.711	1 m.	
248		740	585	600	670	70	9.57	2.4	4.8	177	.731	5 m.	
249	600	770		640	705	65	10.8	2.5	5	177	.770	1 m.	
250		765		640	702.5	62.5	11.2	3.5	7	177	.782	5 m.	
251		770	600	640	685	85	8.06	4.2	8.4	178	.672	10 m.	
252	600	790		680	735	55	13.4	4.3	8.6	176	.845	1 m.	
253		790		680	735	55	13.4	6.3	12.6	176	.845	5 m.	Belt sl. off 2 m.
254	100	100		44	72	28	2.57	.6	1.2	176	.307		lat. Pul. warm. Belt scraped.
256		160		120	140	20	7	2.1	4.2	172	.648		
257		200		160	180	20	9	4	8	171	.736		
258		230		200	215	15	14.3	6.6	13.2	168	.907	1 m.	
259		230	100	200	215	15	14.3	7.2	14.4	168	.907	5 m.	
261	100	100		44	72	28	2.57	.6	1.2	176	.307		Belt dres'd with preparation recommend'd by maker.
263		160		120	140	20	7	2.8	5.6	172	.648		
264		200		160	180	20	9	5.1	10.2	171	.736		
265		230		200	215	15	14.3	7.3	14.6	168	.907	1 m.	
266		230		200	215	15	14.3	7.9	15.8	168	.907	5 m.	
267		270		240	255	15	17	10.7	21.4	168	.966	1 m.	Belt slipped off 3 m. later.
268	300	350		240	295	55	5.36	1.4	2.8	177	.544		
269		400		320	360	40	9	3	6	175	.719		
270		450		400	425	25	17	6.8	13.6	172	.943	1 m.	Belt slipped off 3 m. later.
271		418		360	389	29	13.4	8.8	17.6	173	.859	1 m.	
272		418		360	389	29	13.4	15.6	31.2	173	.859	5 m.	Belt slipped off 2 m. later.
273	600	700		560	630	70	9	6.3	12.6	177	.711		
274		650		480	565	85	6.65	3.1	6.2	178	.610	1 m.	
275		650		480	565	85	6.65	3.9	7.8	178	.610	5 m.	
276		650		480	565	85	6.65	4.4	8.8	178	.610	10 m.	
277	600	652		400	526	126	4.17	1.4	2.8	178	.460		One day later.
279		715		560	637.5	77.5	8.23	2.4	4.8	177	.682		
280		705		560	632.5	72.5	8.72	2.8	5.6	177	.701		
281		700	560	560	630	70	9	3	6	177	.711		
282	560	750		640	695	55	12.6	4.1	8.2	176	.824	1 m.	
283		735	535	640	682.5	47.5	14.3	22	44	176	.866	5 m.	Belt slip'd off.
284		770		640	705	65	10.7	5.4	10.8	177	.767	1 m.	After 3 min. intermission.
285	300	350		240	295	55	5.36	1.2	2.4	177	.543		Temp. 52°.
286		400		320	360	40	9	1.8	3.6	175	.719		
287		430		360	395	35	11.3	2.7	5.4	174	.798		
289		465		400	432.5	32.5	13.3	5.3	10.6	174	.852		
290		455		400	427.5	27.5	15.5	7.3	14.6	173	.907		
291		460		400	430	30	14.3	11.6	23.2	173	.881		
292	100	100		44	72	28	2.57	.5	1	176	.307		
293		125		80	102.5	22.5	4.55	.8	1.6	173	.502		
294		165		120	142.5	22.5	6.33	1.2	2.4	173	.611		
295		200		160	180	20	9	2.1	4.2	171	.736		
296		230		200	215	15	14.3	3.4	6.8	168	.907		
297		230		200	215	15	14.3	3.9	7.8	168	.907		
298	100	270		240	225	15	17	5.7	11.4	168	.966	1 m.	
299		270		240	255	15	17	7.6	15.2	168	.966	5 m.	[4 m. later.
300		270		240	255	15	17	9.3	18.6	168	.966	10 m.	Belt slipped off
303	100	110		40	75	35	2.14	.1	.4	177	.246		20 in. pulleys.
304		132		80	106	26	4.08	.4	1.6	174	.463		
305		160		120	140	20	7	1	4	172	.648		
306		195		160	177.5	17.5	10.1	1.9	7.6	169	.814		
307		230		200	215	15	14.3	3	12	168	.907	1 m.	
308		230	90	200	215	15	14.3	3.5	14	168	.907	5 m.	
309		270		240	255	15	17	4.5	18	168	.966	1 m.	
310		270		240	255	15	17	5.8	23.2	168	.966	5 m.	
311		270		240	255	15	17	6.2	24.8	168	.966	10 m.	
312		270		240	255	15	17	6.2	24.8	168	.966	15 m.	Temp. 56°.
313		270		240	255	15	17	2	8	168	.966	1 m.	
314		270		240	255	15	17	2.1	8.4	168	.966	5 m.	Temp. 42°.
315		305		280	292.5	12.5	23.4	3.4	13.6	165	1.09	1 m.	
316		305	100	280	292.5	12.5	23.4	3.5	14	165	1.09	5 m.	
317	100	335		320	327.5	7.5	43.7	5.2	20.8	152	1.42	1 m.	
318		335		320	327.5	7.5	43.7	6.5	26	152	1.42	5 m.	
319	300	380		320	350	30	11.7	1.3	5.2	173	.814	1 m.	
320		380		320	350	30	11.7	1.4	5.6	173	.814	5 m.	
321		440		400	420	20	21	2.1	8.4	170	1.03	1 m.	
322		440	260	400	420	20	21	2.4	9.6	170	1.03	5 m.	
323	300	480		440	460	20	23	2.8	11.2	170	1.06	1 m.	Temp. 46°.
324		480	285	440	460	20	23	3	12	170	1.06	5 m.	
325		510		480	495	15	33	3.2	12.8	167	1.20	1 m.	[lat. Pul. warm.
326		510		480	495	15	33	5	20	167	1.20	5 m.	Belt sl. off 5 m.

effect of time upon the percentage of slip. In previous experiments the percentage of slip was measured at once after the load was applied, but it was accidentally discovered that repeated measurements seldom agreed, and investigation showed that these discrepancies were principally due to the duration of the experiment. The continual slipping of the belt was found to cause a deposit of a thick black substance upon the surface of the pulley, which, acting as a lubricant, continued to increase the slip still further.

Upon removing the load on brake-wheel, this deposit would be again absorbed by the belt, and the original adhesion would be restored. The temperature was also found to affect the slipping, and, in general, the colder the weather the slower would this deposit take place.

Experiments 353 to 360 inclusive were made to determine the limit at which the belt would run continuously without increasing its percentage of slip. After the pulleys had become well coated and the slip had reached a high per cent., the load on the brake-wheel was gradually removed until a marked improvement was reached, as shown by experiments 359 and 360. The highest allowable coefficient of friction for this belt is therefore estimated to be somewhere between 1.13 and .995, or we may safely say 1. The highest coefficient obtained was 1.67, but, of course, this was temporary. The diameter of the pulley also appears to affect the coefficient of friction to some extent. This is especially to be noticed at the very slow speed of 18 revolutions per minute on 10 in. and 20 in. pulleys, where the adhesion on the 20 in. pulleys is decidedly greater; but, on the other hand, at 160 revolutions per minute the adhesion on the 10 in. pulleys is often as good, and sometimes better, than appears for the 20 in. at the same velocity of sliding.

It might be possible to determine the effect of pulley diameter upon adhesion for a perfectly dry belt, where the condition of its surface remains uniform, but for belts as ordinarily used it would be very difficult, on account of the ever-changing condition of surface produced by slip and temperature. It is generally admitted that the larger the diameter the greater the adhesion for any given tension, but no definite relation has ever been established, nor, indeed, does it seem possible to do so except by the most elaborate and extensive experiments.

It should be observed, however, that such a variation, if true, implies a corresponding variation in the coefficients of friction for different intensities of pressure upon the same pulleys, and that, consequently, our experiments should show higher coefficients under the lighter loads for the same velocity of sliding. Referring to Table II., where the condition of the belt is dry and uniform for a large range of tensions, we find that this inference is generally sustained, although there are some few exceptions.

Experiment 106 may be compared with 116, and 112 with 133, also 108, 113, and 135, all showing great reductions in the coefficients of friction for increments in tension. The exceptions are all to be found under the smallest velocities of sliding, and appear only in the third decimal place, so that the weight of their record against the probability of such a law is light. By a similar inference it should also follow that a wide belt would drive a little more at a given tension than a narrow one, on account of the reduction in pressure per square inch against the pulley. The mean intensity of pressure of a belt against its pulley may be considered as proportional to the sum of the tensions divided by the product of pulley diameter and width of belt, and an analysis of the experiments referred to will show the relation there existing between intensity of pressure and coefficient of friction.

If we let I = intensity of pressure, and φ = coefficient of friction, we shall find that φ is approximately proportional to $I^{-.15}$, or, in other words that doubling the width of belt or diameter of pulley would apparently increase the coefficient of friction about 10 per cent. of its original value. This relation is not proved, of course, and it is given only as a suggestion toward the solution of the question. If the coefficient of friction does vary with the intensity of pressure, the problem of determining the driving power of a belt on strictly mathematical principles will indeed be complicated.

The coefficient of friction in the tables has been calculated by a well-known formula, developed upon the assumption of a uniform coefficient around the arc of contact, but this could no longer be considered as correct if the coefficient is known to vary with the pressure. Referring from Table II. to Table III., we shall find at once the proof and contradiction of the inferences drawn from Table II., and we are left as much in the dark as ever respecting the value of pressure intensity.

Practical millwrights all know, or think they know, that an increase of pulley diameter increases the drive, and it is a matter of common observation that when large and small pulleys are connected by a crossed belt, the smaller pulley will invariably slip first.

On one side a great deal of testimony can be adduced to show that pressure intensity should be an important factor in the theory of belt transmission, and, on the other hand, we have strong evidence to the contrary. I may refer, in this connection, to the experiments of Mr. Holman in *Journal of Franklin Institute* for September, 1885, in which there is no indication that the coefficient of friction varies at all with the pressure. The coefficients obtained by Mr. Holman follow the variations in slip like our own, and it gives us pleasure to observe that our general results and conclusions are so strongly corroborative of each other. There is at the same time a great difference in the methods pursued in arriving at the same results. In his experiments, the velocity of sliding was the fixed condition upon which the coefficient of friction was determined, while, in ours, the conditions were those of actual practice in which the percentage of slip was measured. Our least amount of slip, with a dry belt running at the extremely slow speed of 90 feet per minute, was 1.08 inches, and ten times this would be perfectly proper and allowable. A great many of Mr. Holman's experiments are taken at rates below 1" per minute, and the coefficients obtained are very much below the average practice, as himself seems to believe.

The velocity of sliding which may be assumed in selecting a proper coefficient is directly proportional to the belt speed, and may safely be estimated at .01 of that speed. For a pair of pulleys we should have .01 on each pulley, and therefore .02 for slip. Few belts run slower than 200 or 300 ft. per minute, and consequently a slip of less than 2 or 3 ft. per minute need seldom be considered. Another point of difference which may possibly affect the coefficients obtained, is that, in Mr. Holman's case the same portion of belt surface was subject to continuous friction, while in ours, the friction was spread over the belt at successive portions as in actual work. This we consider a new and important feature of our experiments. As a matter of practical importance, care was taken to observe, as nearly as possible, the maximum slip which might safely take place before a belt would be thrown from its pulley. A number of observations taken throughout the experiments led to the final conclusion that 20 per cent. of slip was as much as could safely be admitted. This information has been found of value in cases where work is done intermittently by a fly-wheel and the belt has to restore the speed of the wheel, It cannot be said in regard to a maximum value of φ that any was determined or even indicated, although it is certain that the increase at high rates of slip becomes less rapid.

We have now seen that the driving power of a leather belt depends upon such a variety of conditions, that it would be manifestly impracticable if not impossible to correlate them all, and it is thought better to admit the difficulties at once than to involve the subject in a labyrinth of formulæ which life is too short to solve.

The relative value of pulley diameters may vary with different belts, and all that can be expected or desired is some general expression covering roughly the greatest number of cases. Our apparatus did not admit of extensive variations in this respect, and our attention was given principally to the question of slip.

The coefficients given in Table III. are remarkably high, and show a great superiority for the rawhide over tanned leather in point of adhesion. The belt in question was very soft and pliable, but a little twisted from use on a cone pulley where it had rubbed against one side. It is not desirable, on account of its soft and adhesive nature, to use this kind of belt where frequent shifting is required, and when used on cone pulleys it is liable to climb and stretch against the side of the cone; but for a plain straight connection, there seems to be little room for improvement. Table IV. contains the results of similar experiments upon an oak-tanned leather belt made by Chas. A. Shieren & Co. Here the coefficients are much smaller than those given in Table III., and there is quite a marked difference between the coefficients for 10 in. and 20 in. pulleys.

As before noticed, the outside temperature has its effect, and it is probable that much lower results would have been obtained had the experiments been made in the heat of midsummer. The high coefficients obtained, together with the rapid increase of tension, show that the pulling power of a long horizontal belt must, in many cases, be limited by its strength rather than by its adhesion.

Table V. gives the results of experiments upon a light planer

TABLE V.

OAK-TANNED LEATHER BELT 2" WIDE BY $\frac{3}{16}$" THICK AND 30' 4" LONG, WEIGHING 4 LBS., ON 20" CAST-IRON PULLEYS. DRY AND SMOOTH, TAKEN FROM SERVICE ON PLANER.

No. of Experi'nt.	Sum of Tensions. $T+t$ Initial.	Working.	Final.	$T-t$ Working.	T	t	$\frac{T}{t}$	Percentage of Slip.	Velocity of Slip in ft. per minute.	Arc of Contact.	Coefficient of Friction.	Duration of run at time of experiment.	Remarks.
429	100	110		40	75	35	2.14	1.2	.54	179°	.243		18 r. p. m.
430		115		60	87.5	27.5	3.18	6.1	2.75	178	.372		
431		118		70	94	24	3.92	16.5	7.42	178	.440		
432		105		20	62.5	42.5	1.47	.3	.14	179	.123		
433		112		50	81	31	2.61	3.5	1.57	178	.309		
435	200	204		40	132	82	1.61	.2	.09	180	.152		
436		206		60	133	73	1.82	.7	.32	180	.191		
437		208		80	144	64	2.25	1.8	.81	179	.260		
438		210		100	155	55	2.82	3.7	1.66	179	.332		
439		212		120	166	40	3.61	7.7	3.47	179	.411		
440		215		140	177.5	37.5	4.73	18.4	8.28	179	.497		
442	100	110		60	85	25	3.40	.3	7.12	178	.394		950 r. p. m.
443		120		80	100	20	5	.7	16.62	178	.518		
445		125		90	107.5	17.5	6.14	3	71.25	177	.587	Start.	
446		125		90	107.5	17.5	6.14	25	593.7	177	.587	5 min.	
448	200	200		80	140	60	2.33	.4	9.5	179	.271		
449		200		100	150	50	3	.5	11.87	179	.352		
450		195	175	120	157.5	37.5	4.20	.8	19.	179	.459		
451	150	175		120	147.5	27.5	5.36	.9	21.38	178	.540		
452	135	160		120	140	20	7	20	475	178	.626		

belt at very slow and very high speeds. As would naturally be expected, much higher coefficients were found at the high speed on account of the greater velocity of sliding.

It may here be mentioned that the sum of the tensions was the horizontal pressure of the belt against the pulleys, and that no allowance was necessary for the effect of the centrifugal force. At the speed here used, the tension indicated in the belt at rest was about 50 lbs. greater than when in motion.

The conclusion to be drawn from this series of experiments is the great importance of high speed in the economy of belt transmission. The friction of belts on pulleys is evidently dependent on the velocity of sliding, and, as a general rule, the greater the velocity the greater the friction. There are but few apparent exceptions to this rule, and investigation of them has led to the inference that in all such cases, the condition of the belt or pulley surface had undergone a change either by heating or by deposit from the belt on the pulley. The percentage of slip is the measure of the power lost in transmission by the belt itself, and the

TABLE VI.

SHOWING THE AVERAGE COEFFICIENT OF FRICTION AND VELOCITY OF SLIP FOR A NUMBER OF EXPERIMENTS IN WHICH THE SLIP APPROXIMATED 2 PER CENT.

No. exper'ts in av'ge.	Percentage of Slip.	Veloc. of Sl. in ft. per m.	Coefficient of Friction.	Belt.	Pulleys.	Remarks.
3	1.4	5.6	.661	5½" old belt. Table I	20" diam. pap. cov'd	Belt in nor. w'k'g con.
2	1.7	6.8	.44	5½" old belt. " I	20" di. cast-iron sur.	" " "
2	1.55	6.2	.575	5½" old belt. " I	20" di. cast-iron sur.	Belt dressed with "Beltilene."
5	1.7	6.8	.452	2¼" dbl. belt. " II	20" di. cast-iron sur.	B't dry as us. on plan'r.
2	1.5	6	.818	2¼" dbl. belt. " II	20" di. cast-iron sur.	Belt dressed with "Sankey's Life of Leather."
2	1.7	6.8	1.38	4" r'hide b. " III	20" di. cast-iron sur.	Belt in nor. w'k'g con.
11	1.8	3.6	.861	4" r'hide b. " III	10" diameter.....	" " "
1	2	.45	.432	4" r'hide b. " III	10" diameter.....	" " "
1	1.9	.86	.691	4" r'hide b. " III	20" diameter.....	" " "
7	1.94	3.88	.617	4" o.tan'd b. " IV	10" diameter.....	" " "
4	1.85	7.40	.906	4" o.tan'd b. " IV	20" diameter.....	" " "
2	1.5	.67	.251	2" o.tan'd b. " V	20" diameter.....	B't dry as us. on plan'r.
2	.8	38	.529	2" o.tan'd b. " V	20" diameter.....	" " "

higher the speed the less this becomes. There is a limit, however, to the power which may be transmitted as the speed is increased, and this limit is caused by the reduction in pressure against the pulley arising from the action of centrifugal force.

This point has been clearly demonstrated in a paper read before this Society by Mr. A. F. Nagle on the "Horse Power of Leather belts,"* and the formula there developed is written thus:

$$HP = CVtw\,(S - .012\,V^2) \div 550, \quad . \quad . \quad . \quad (1.)$$

in which C is a constant to be determined from the arc of contact and coefficient of friction as expressed in the equation:

$$C = 1 - 10^{-.00758 f\alpha} \quad . \quad . \quad . \quad . \quad (2.)$$

V = velocity of belt in feet per second.
t = thickness of the belt in inches.
w = width " "
S = working strength of leather in lbs. per square inch.
f = coefficient of friction.
α = arc of contact in degrees.

The velocity at which the maximum amount of power can be transmitted by any given belt is independent of its arc of contact and coefficient of friction, and depends only upon the working strength of the material and its specific gravity.

From equation (1.) we obtain for the maximum power of leather belts the condition:

$$V = \sqrt{28S}, \quad . \quad . \quad . \quad . \quad . \quad . \quad . \quad . \quad (3.)$$

and for any other material whose specific gravity is y, we find

$$V = 5\sqrt{\frac{S}{y}}. \quad . \quad . \quad . \quad . \quad . \quad . \quad . \quad . \quad (4.)$$

The coefficient of friction .40, adopted by Mr. Nagle, appears from these experiments to be on the safe side for all working requirements, except in cases where dry belts are run at slow speeds.

If we assume 2 per cent. as the greatest allowable slip, and select within this limit the coefficient corresponding to the nearest approximations to it, we can form some idea of the coefficients which can be relied upon at different speeds.

Table VI. gives the average results obtained for this maximum allowance of slip, and shows an extreme variation in the coefficient of friction from .251 for a dry oak-tanned belt at the slow speed of 90 feet per minute to 1.38 for a rawhide belt at the moderate speed of 800 feet per minute.

For continuous working, it is probable that the coefficient 1.38 is too high, but still it is certain that a coefficient of 1.00 can be steadily maintained for an indefinite length of time, and we may say that in actual practice the coefficient of friction may vary from .25 to 1.00 under good working conditions. This extreme variation in the coefficient of friction does not give rise, as might at first be supposed, to such a great difference in the transmission of power. It will be seen by reference to formula (1.) that the power transmitted for any given working strength and speed is limited only by the value of C, which depends upon the arc of contact and the coefficient of friction.

For the usual arc of contact, 180°, the power transmitted when $f = .25$ is about 24 per cent. less than when $f = .40$, and when $f = 1.00$, the power transmitted is about 33 per cent. more, from which it appears that in extreme cases the power transmitted may be $\frac{1}{4}$ less or $\frac{1}{3}$ more than will be found from the use of Mr. Nagle's coefficient of .40.

The percentage of slip is the most important factor affecting the efficiency of belt transmission, but in addition to this we have

* Transactions A. S. M. E., Vol. II., page 91. See also Mr. Nagle's Tables I., II., and III., in Appendix VI. to this paper for values of C and $H.\ P.$

TABLE VII.

SHOWING THE TORSIONAL MOMENT IN LBS. REQUIRED TO OVERCOME JOURNAL FRICTION AND OTHER INTERNAL RESISTANCES, FOR BELTS AT VARIOUS SPEEDS AND TENSIONS ON DIFFERENT ARRANGEMENTS OF PULLEYS.

No. of experim'nt.	Tension. $T + t$	Moment in inch lbs.	Diameter of pulleys.	Revolut's per min.	Width of Belt.	Thickness of belt.	Manner of Driving.	Remarks.
1	100	20	20″	160	6″	$\frac{7}{32}$″	Straight open belt.	
3	300	25						
5	500	30						
7	700	35						
10	1000	45						
45	100	15						
47	300	22.5						
49	500	27.5						
51	700	35						
54	1000	50						
163	100	17.5	20″	160	4″	$\frac{9}{32}$″	Straight open belt.	
165	300	25						
167	500	30						
169	700	35						
194	100	17.5	10″	160	4″	$\frac{5}{16}$″	Straight open belt.	
196	300	27.5						
198	500	40.						
200	700	55.						
202	900	70.						
203	1000	80.						
327	100	20	10″	18	4″	$\frac{5}{16}$″	Straight open belt.	
328	1000	80						
393	100	20						
394	1000	100						
395	600	60						
405	100	20	20″	18	4″	$\frac{9}{32}$″	Straight open belt.	
406	1000	160						
407	600	100						
428	100	20	20″	18	2″	$\frac{9}{32}$″	Straight open belt.	
434	200	25						
441	100	25	20″	950	2″	$\frac{3}{16}$″	Straight open belt.	
447	200	30						
453	100	25	20″	160	6″	$\frac{7}{32}$″	Crossed belt.	14′ 6″ between pulleys.
454	500	60						
455	1000	110						14′ 6″ bet. pul'ys
459	100	15	20″	160	6″	$\frac{7}{32}$″	Straight open belt.	14′ 6″ between pulleys.
460	500	25						
461	1000	65						
462	100	25	20″	160	6″	$\frac{7}{32}$″	Straight open belt.	With 8″ tightener.
463	500	60						
464	1000	110						
465	100	45	20″	160	6″	$\frac{7}{32}$″	Crossed belt.	8 feet between pulleys.
466	500	105						
467	1000	180						
470	100	25	20″	160	6″	$\frac{7}{32}$″	Quarter turn belt on 16″ diameter mule pulleys.	
471	500	80						
472	750	145						
473	1000	250						
474	750	170						
475	500	110						
476	1000	220						
477	1000	140	20″	160	6″	$\frac{7}{32}$″	Quarter turn belt on 16″ diameter mule pulleys.	Freshly oiled.
478	750	100						
479	500	70						
480	100	20						
481	50	60	20″	160	6″	$\frac{7}{32}$″	Quarter turn on 16″ mule pulleys.	Belt rub. against low.guide m.pul.
482	25	120						
483	100	20	20″	160	6″	$\frac{7}{32}$″	Quarter turn on 16″ mule pulleys.	Well oiled, after a run of 2 hrs. at $T + t = 100$.
484	500	50						
485	750	70						
486	1000	105						
495	250	30	20″	160	6″	$\frac{7}{32}$″	Half turn belt on 16″ mule pulleys.	
496	500	50						
497	750	90						
498	1000	170						
503	1000	260	20″	160	6″	$\frac{7}{32}$″	Quarter twist.	10 feet between pulleys.
504	750	190						
505	500	130						
506	250	80						
507	100	30						
513	100	50	20″	160	6″	$\frac{7}{32}$″	Quarter twist.	7′ 6″ between pulleys.
514	250	105						
515	500	200						
516	750	290						
517	1000	380						
523	100	25	20″	160	4″	$\frac{1}{4}$″	Quarter twist.	10 feet between pulleys.
524	250	50						
525	500	95						
526	750	145						
527	1000	210						
528	100	65	20″	160	4″	$\frac{1}{4}$″	Quarter twist.	6 feet between pulleys.
529	250	135						
530	500	245						
531	750	380						
533	100	25	20″	160	6″	$\frac{7}{32}$″	Quarter twist.	16′ 6″ between pulleys.
534	250	40						
535	500	75						
536	750	105						
537	1000	165						

TABLE VII.—*Continued.*

No. of experim'nt.	Tension. $T+t$	Moment in inch lbs.	Diameter of pulleys.	Revolut's per min.	Width of Belt.	Thickness of belt.	Manner of Driving.	Remarks.
539	1000	130	20″	160	6″	$\frac{7}{32}$″	Quarter twist with 16″ diameter carrying pulley.	7′ 6″ between pulleys.
540	750	110						
541	500	90						
542	250	60						
543	100	40						
544	100	30						
545	250	55						
546	500	90						
547	750	120						
548	1000	170						
569	100	25	20″	160	6″	$\frac{7}{32}$	Straight open belt.	
571	500	55						
572	750	70						
573	1000	90						

journal friction, the resistance of the air, and with crossed belts the friction of the belt upon itself. These have been termed internal resistances, and their values for some of the most common arrangements of pulleys are given in Table VII. From this table it appears that the moment required to run a straight belt varies from 15 to 25 inch lbs. at 100 lbs. tension for all speeds. At 160 revolutions per minute and 1,000 lbs. tension, the required moment varied from 45 to 90 inch lbs., and at 18 revolutions per minute and at the same tension it varied from 80 to 150 inch lbs.

From the average of these quantities we find the moment of resistance to be expressed by the following formulæ for straight open belts between 2″ journals:

At 160 r. p. m.:

$$M = .053\ S + 14.7, \quad . \quad . \quad . \quad . \quad . \quad . \quad (5.)$$

At 18 r. p. m.:

$$M = 11.\ S + 9, \quad . \quad . \quad . \quad . \quad . \quad . \quad (6.)$$

in which

M = moment of resistance in inch lbs.
S = sum of tensions.

When a crossed belt does not rub upon itself, the resistance is the same as for an open belt.

The resistance offered by the introduction of carrying pulleys and tighteners is appreciable, and depends upon the pressure brought to bear against their journals. If the belt rubs against the flanges of the carrying pulleys, the resistance is very much increased, and this is often liable to occur in horizontal belts from a change of load. The friction on journals of carrying pulleys may be estimated by the formulæ already given if we substitute for S the pressure against their journals. In the experiments which were made upon internal resistances, the greatest resistance was offered by a quarter-twist belt 6 feet between journals on 20-inch pulleys.

The equation for this belt may be written:

$$M = .35\ S + 58, \quad . \quad . \quad . \quad . \quad . \quad . \quad (7.)$$

but the introduction of a carrying pulley reduced the resistance to no more than what might be expected from the same number of journals with a straight belt.

With quarter-twist belts the resistance lies chiefly in slip, which occurs as the belt leaves the pulleys, and this naturally depends upon the distance between journals in terms of the diameters of the pulleys.

The effect of time upon the tension of the belt used in Table VIII. is plainly shown by experiments 588 to 613 inclusive, between which the pulleys remained at a fixed distance apart, and the belt slowly stretched from a tension of 380 to 280 lbs.

To estimate the efficiency of belt transmission for an average case, we may assume 40 in. lbs. as the moment of internal resistance for a belt whose tension is 500 lbs. and 40 in. lbs. statical moment = about 20 ft. lbs. per revolution. If the belt is transmitting 400 lbs. with two per cent. of slip on 20 in. pulleys, then .02 × 400 × 5 = 40 ft lbs. are lost per revolution in slip, making a total loss of 60 ft. lbs. per revolution.

TABLE VIII.

SHOWING THE INCREASE IN THE SUM OF THE TENSIONS ON A VERTICAL BELT 4″ WIDE BY $\frac{1}{4}$″ THICK, AND 24 FT. LONG, ON 20″ CAST-IRON PULLEYS, AT 120 R. P. M.

No. of experim'nt.	Scales A.*	Scales B.*	Tension $T+t$	Tension $T-t$	T	t	Increm'nt of $T+t$	Percent'e of Increment.	Date.
578	93	101	194	16	105	89	0		5—15—1885.
579	70	142	212	144	178	34	18		
580	67	170	237	206	221.5	15.5	43		
581	66	180	246	228	237	9	52		
582	66	188	254	244	249	5	60	.323	
583	91	101	192	20	106	86	− 2		
584	202	210	412	16	214	214	0		5—15—1885.
585	167	250	417	166	292.5	292.5	5		
586	145	300	445	310	376.5	376.5	33	.171	
587	185	195	380	20	200	200	−32		
588	190	199	380	0	190	190	0		5—18—1885.
589	133	250	393	214	303.5	89.5	13	.033	
590	177	177	354	0	177	177	0		5—19—1885.
591	156	203	359	94	226.5	132.5	5		
592	138	235	373	194	283.5	89.5	19		
593	135	250	385	230	307.5	77.5	31		
594	128	275	403	294	348.5	54.5	49		
595	125	300	425	350	387.5	37.5	71		
596	123	325	448	404	426	22	94	.333	
597	168	168	336	0	168	168	−18		
598	143	143	286	0	143	143	0		5—25—1885.
599	140	148	288	16	152	136	2		
600	130	160	290	60	175	115	4		
601	122	170	292	196	194	98	6		
602	116	180	296	28	212	84	10		
603	112	190	302	156	229	73	16		
604	108	200	308	184	246	62	22		
605	105	210	315	210	262.5	52.5	29		
606	102	220	322	236	279	43	36		
607	100	230	330	260	295	35	44		
608	99	240	339	282	310.5	28.5	53		
609	98	250	348	304	326	22	62		
610	98	260	358	316	337	21	72		
611	99	270	369	342	355.5	13.5	83		
612	100	280	380	360	370	10	94	.357	
613	140	140	280	0	140	140	− 6		

* Scales A recorded the reduction of the load on the testing device for *vertical* belts by the tension of the loose part of the belt (t.) Scales B, by that of the tight side of the belt (T).

The total power expended per revolution is about 2,000 ft. lbs., therefore .03 is lost.

Under light loads, the internal resistance, which is nearly constant in amount, may be a large percentage of the power transmitted, while under heavy loads the percentage of slip may become the principal loss.

It would be difficult to work out, or even to use, a general expression for the efficiency of belt transmission, but, from the foregoing, it would seem safe to assume that 97 per cent. can be obtained under good working conditions.

When a belt is too tight, there is a constant waste in journal friction; and when too loose, there may be a much greater loss in efficiency from slip. The allowance recommended of 2 per cent. for slip is rather more than experiment would indicate for any possible crawl or creep due to the elasticity of the belt, but in connection with this, there is probably always more or less actual slip, and we are inclined to think that in most cases this allowance may be divided into equal parts representing creep and slip proper. Under good working conditions, a belt is probably stretched about 1 per cent. on the tight side, which naturally gives 1 per cent. of creep, and to this we have added another per cent. for actual slip in fixing the limit proposed.

The indications and conclusions to be drawn from these experiments are:

1. That the coefficient of friction may vary under practical working conditions from 25 per cent. to 100 per cent.

2. That its value depends upon the nature and condition of the leather, the velocity of sliding, temperature, and pressure.

3. That an excessive amount of slip has a tendency to become greater and greater, until the belt finally leaves the pulley.

4. That a belt will seldom remain upon a pulley when the slip exceeds 20 per cent.

5. That excessive slipping dries out the leather and leads toward the condition of minimum adhesion.

6. That rawhide has much greater adhesion than tanned leather, giving a coefficient of 100 per cent. at the moderate slip of 5 ft. per minute.

7. That a velocity of sliding equal to .01 of the belt speed is not excessive.

8. That the coefficients in general use are rather below the average results obtained.

9. That when suddenly forced to slip, the coefficient of friction becomes momentarily very high, but that it gradually decreases as the slip continues.

10. That the sum of the tensions is not constant, but increases with the load to the maximum extent of about 33 per cent. with vertical belts.

11. That, with horizontal belts, the sum of the tensions may increase indefinitely as far as the breaking strength of the belt.

12. That the economy of belt transmission depends principally upon journal friction and slip.

13. That it is important on this account to make the belt speed as high as possible within the limits of 5,000 or 6,000 ft. per minute.

14. That quarter-twist belts should be avoided.

15. That it is preferable in all cases, from considerations of economy in wear on belt and power consumed, to use an intermediate guide pulley, so placed that the belt may be run in either direction.

16. That the introduetion of guide and carrying pulleys adds to the internal resistances an amount proportional to the friction of their journals.

17. That there is still need of more light on the subject.

CHAPTER XXXIII.—STEAM ENGINES.

CHOICE OF ENGINE FOR VARIOUS DUTIES.*

"THE type of engine to be chosen in any particular case may depend upon several conditions, such as the capital available, the amount and quality of the water supply, the kind of attendance which can be had, the cost of fuel, the cost of carrying the engine to its destination, the steam pressure which may be available or advisable, and the kind of work the engine will have to do.

"Economy of steam is always an important consideration, but it is not the only one. For example, a well-made *single cylinder engine* with a simple form of cut-off gear may, in many circumstances, give a better return for money invested than a more elaborate and expensive *compound engine;* for instance, when fuel is cheap or consists of waste material, when skilled attendance and repairs are expensive, when the cost of transportation is very heavy, or when the work to be done is of a temporary or intermittent character. The difference in economy between the two types is by no means great when each is built with equal skill; the choice must, therefore, depend not on steam economy alone, but on all the conditions, and one or more of those above named may turn the scale in favor of the simple engine. For extremely variable duty suddenly put on or taken off the engine, as in the case of saw mills and rolling mills, simple *non-condensing engines* with automatic cut-off gear are better than all others.

"*Simple condensing engines* are also well adapted for dealing with a wide range of power, but are not so well suited to cases where the load is frequently and suddenly put on and taken off. In a condensing engine, working economically with an early cut-off, a large proportion of the work is done by steam below the pressure of the atmosphere; over this the governor has very indirect control, and when the greater part of the load is suddenly removed, the engine will inevitably "race" unless some "device" is fitted in connection with the governor to "break" or impair the vacuum in the condenser when the speed seriously increases. Such devices cannot always be depended on, and if frequently called into action the engine is better and safer without the condenser altogether.

"Engines which have to be frequently reversed in winding, hauling, driving reversing rolling mills, and similar work, are most conveniently handled when of the simple cylinder non-condensing type, usually made with two cylinders coupled to cranks at right angles to each other. Such engines are sometimes, but erroneously, called *compound*, a term which should never be applied to them. They are best described as *coupled engines* with *simple cylinders*. *Compound non-condensing engines* are, however, sometimes employed for winding, and for reversing mills in cases where economy of fuel is important. A good type of this engine is the *coupled tandem compound engine*, with two high and two low pressure cylinders.

"*Compound engines*, *condensing* and *non-condensing*, are employed to the greatest advantage when the running is continuous and the load fairly constant. Such engines cannot be properly worked with very light loads, and if very heavily loaded the advantage of compounding also disappears.

"Engines which have to run at very high speeds are usually of the simple cylinder non-condensing class, or compound non-condensing, as simple in construction as possible, and without any elaborate cut-off gear, even when working with steam of very high pressure.

"Safe running, rather than steam economy, is the first consideration. With compound cylinders and high steam pressure, these little engines are, however, very fairly economical. They must be carefully attended to, and their moving parts accurately adjusted, otherwise sorrow and disaster may at any time follow high speed. The use of this class of engine is, therefore, generally restricted to cases where a high speed of crankshaft is essential, as in driving dynamos, fans, and centrifugal pumps.

"CHOICE OF ENGINES IN RELATION TO STEAM PRESSURE.—Engines have frequently to be provided to work with steam boilers already in existence. The question of the most suitable steam pressure has also to be dealt with, and a few remarks on the class of engine best adapted to any given pressure may be of service, seeing that engine builders are frequently asked to supply compound engines to work with unsuitable pressures. *Simple cylinder engines*, *condensing* and *non-condensing*, steam jacketed, provided with cut-off gear, and intended to work economically, are best adapted for steam pressures up to 80 or 100 lbs. maximum. With regard to the condensing engines, it may be accepted that the economical results will be quite as good with steam of 80 lbs. as with a pressure of 100 lbs. Condensation, due to excessive expansion and to extreme ranges of temperature in a single cylinder, altogether neutralizes the gain, which would under more favorable circumstances attend the use of the greater pressure. The limit of economy with simple cylinder engines is thus reached, and for higher pressures the compound engine is substituted, subject, of course, to other conditions already referred to.

"On the other hand, it may be accepted that, for steam pressures lower than 70 lbs., a *compound condensing engine* possesses no material economical advantage over a well-chosen simple cylinder condensing engine with steam jacket and cut-off gear. It has been supposed, commonly enough, that a compound condensing engine must be more economical than a simple engine at almost any usual pressure. This is doubtless due to the fact that when a compound replaces a simple engine, a marked improvement in economy *generally* results. In many such cases, however, the change has been accompanied by an increase of steam pressure, and when this has not occurred, the new engine has probably taken the place of an old one out of repair, too small for its duty, and unable to use steam with sufficient expansion. When a really good simple condensing engine has been replaced by a compound engine using only the same steam pressure, under 70 lbs., and expanding it to about the same degree, the result has been rather disappointing, the factory owner has spent a large sum of money, and the fuel bill has scarcely been reduced. There need, therefore, be no hesitation in selecting single cylinder jacketed engines with cut-off gear and condensers for pressures of 70 to 80 lbs. even when economy of fuel is of importance. The purchaser must, however, be prepared to pay for a strong, well-made engine, with a cylinder large enough to enable the proper amount of expansion to be obtained. Cases occur where it may be prudent to put down a compound condensing engine with a pressure of 65 to 70 lbs. only, in the expectation that an opportunity will present itself in two or three years to put down boilers more suitable for such an engine. When the steam pressure reaches 80 lbs., and the greatest economy is of more importance than first cost or simplicity of construction, the compound engine is to be preferred.

"For pressures of 90 to 120 or 130 lbs. and for maximum economy, the compound engine is always used, subject to conditions already named; and when the pressure exceeds 130 or 140 lbs.,

* From a work written by David Home Morton, A. M. I. C. E., M. I., M. E., and issued by Tangyes, Ltd

the *triple compound engine* is preferred for the same reasons which make two cylinders advantageous when the pressure exceeds 80 or 90 lbs. It may also be mentioned that in dealing with the higher pressures two or more cylinders are preferred, in order to divide and distribute the stresses, and to enable large powers to be obtained with moderate dimensions. The immense amount of power required to propel a fast mail steamer is only obtained successfully because the work of expansion is effected in three or more stages, and because the power is transmitted to the crank-shaft or shafts from the pistons by three, four, or six sets of rods.

"*Compound non-condensing engines* have come into use extensively during the past ten years. It should, however, be clearly understood that, just as there is no advantage in having a compound condensing engine for pressures under 70 lbs. per square inch, there is no advantage in having a *compound non-condensing* engine for pressures lower than 80 lbs. For lower pressures the work of expansion can be more conveniently and quite as economically performed in a single cylinder. Engine builders usually proportion the cylinders of compound *non-condensing* engines so that the steam shall be expanded not less than five times. The very lowest pressure with which this amount of expansion can be used to any advantage in a *non-condensing* engine is 80 lbs. For all pressures below 80 lbs. the single cylinder engine with cut-off gear should therefore be used when there is no condenser.

"The most convenient pressures for *compound non-condensing* engines are from 90 to 120 or 140 lbs. For pressures above 150 lbs. the triple compound engine can be employed with advantage, provided the load is full and constant.

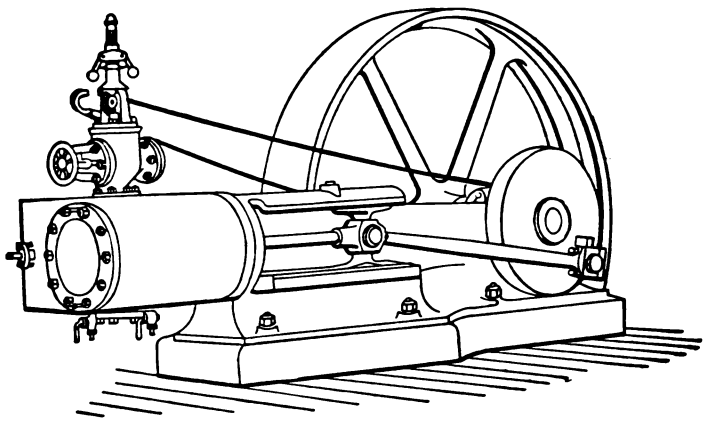

Fig. 2824.

"FORMS OF ENGINES IN RELATION TO TRANSMISSION OF POWER.—As far as steam economy is concerned, the form of an engine is of little importance; it may be horizontal or vertical, with cylinders arranged tandem fashion, or side by side, provided equal skill is brought to bear on the design in each case. The form has, however, frequently to be considered in relation to available space and to the method of transmitting the power from the engine. Vertical engines have become almost universal in steamships, because all conditions point imperatively to that form. The vertical engine is also much used in smaller sizes, for stationary purposes; in larger sizes more rarely.

"Large vertical engines are more costly than horizontal engines of equal power; they occupy a smaller floor space, but require deeper foundations and loftier houses with stairs and platforms. The examination or removal of their moving parts for repairs is also difficult, even when an overhead travelling crane or other lifting tackle is provided.

"Apart from the small floor space, the principal advantage of the vertical engine is that its cylinders wear rather more uniformly than those of horizontal engines. In the latter class of engine no difficulty or inconvenience is experienced, excepting with very large sizes.

"Many of the finest modern engines for pumping in water works, and for air compressing, and blowing in iron and steel works, are either of the vertical or of the balance-beam class, and for such purposes the vertical cylinders are admirably adapted. For ordinary industrial work, however, the horizontal engine is in almost universal demand; a long, shallow foundation and a cheap house with a low roof are sufficient; all the moving parts are under the eye, readily accessible for attendance or for repairs. The ordinary *simple* or *single cylinder* engine, as Fig. 2824, with single side crank, or side "hitch," as some American engineers prefer to call it, is convenient for transmitting power under almost any circumstances, either from the flywheel direct, by belt or rope, from the shaft by gearing, or from the end of the shaft directly into the mill by means of a coupling.

"The *tandem compound engine*, as Fig. 2825, has the same advantages. This class of engine is popular, being the cheapest and simplest form of compound engine. It can be placed in a very narrow space, but requires considerable length. The examination or removal of its pistons involves some trouble and the exercise of patience; this is not, however, a serious objection.

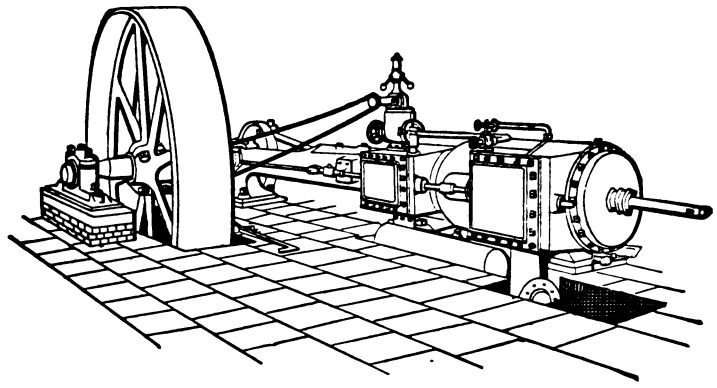

Fig. 2825.

Pistons working in correctly bored cylinders with simple forms of packing rings pressing only gently against the sides of the cylinders will remain practically tight for years, and, rightly or wrongly, many large engines for marine and water works purposes are constructed so that their low pressure pistons cannot be displaced until the high pressure cylinders have been entirely removed. Accessibility is of much greater importance in the case of slide valves than in the case of pistons.

"The *coupled engine*, either with *two simple cylinders*, or *compound* with *one high* and *one low pressure* cylinder, two "side" cranks, two main bearings only, and one large flywheel placed between these bearings, as, for example, Fig. 2826, is much used, and makes a most satisfactory motor for all factory purposes. It

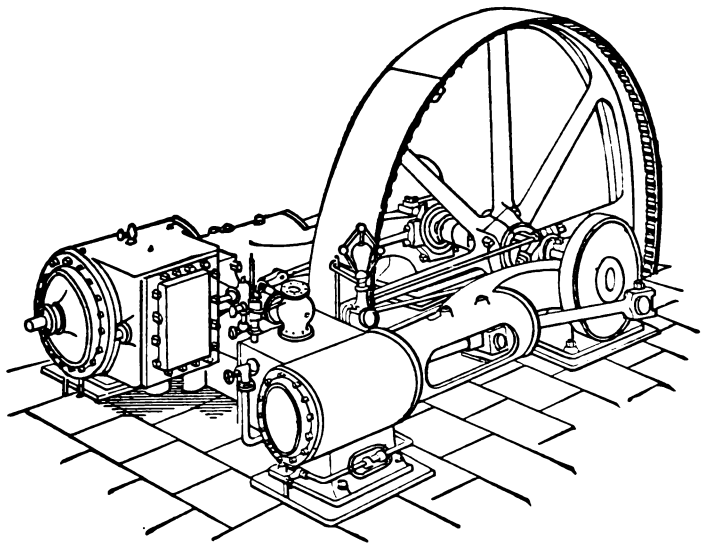

Fig. 2826.

is accessible in all directions, occupies reasonable space, and the shaft, having only two main bearings, is easily kept in perfect running order. The flywheel can be large, and the power is preferably transmitted from this wheel by belts or ropes moving with high velocity and with very low tension. When either of these methods of transmission is convenient, no better type of engine can be used than the *coupled compound* for driving the largest mills, for comparatively small plants, and for electric lighting stations.

"The *coupled compound tandem engine* enjoys favor with the *coupled compound* for mill driving, and enables a large amount of power to be obtained with four cylinders of moderate size. It is virtually two complete compound engines working together;

and this being so, one half of the engine can be worked while the other is at rest for repairs, or because the load may be too small for both. This useful feature is sometimes taken advantage of in another way, one engine being put down in a new factory, with all arrangements perfectly made to receive the second when the extension of the mill demands more power. Triple and quadruple compound engines are very conveniently arranged for mill purposes in coupled tandem fashion, and such engines are likely to be popular when higher pressures become more general. Quadruple compound engines on this plan were built by the late Mr. Daniel Adamson many years ago, and they were only before their time because the steam pressures then convenient were not high enough to render four cylinders necessary or desirable.

"*Self-contained engines*, or centre crank engines with double web cranks of the marine or locomotive kind, or with the cheapest form of bent crank, either single or double throw, as Fig. 2827, are very convenient for small powers, and very desirable for high speeds. When the cranks are made of marine form, the engines are considerably more expensive than those with "side" cranks, the framing must be of the strongest character, and the bearings nicely adjusted to insure good running. When the cylinders *must* be side by side, and when the power *must* be transmitted directly from one end of the shaft by means of a coupling, double crank engines of the type under notice *must* be employed.

"In some cases coupled compound engines with marine cranks are employed even for very large powers and for mill driving.

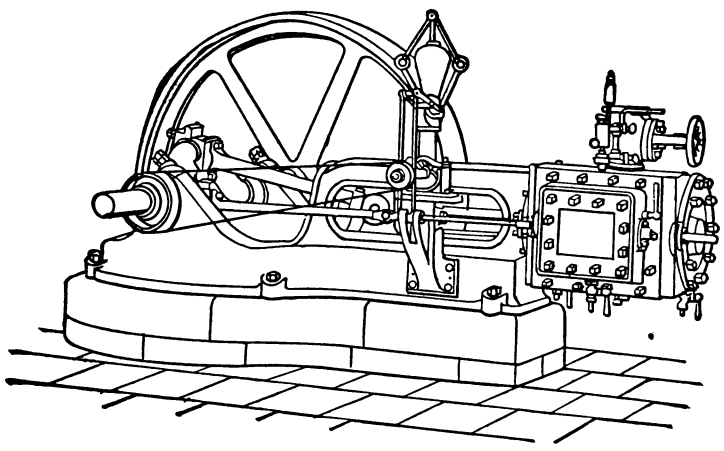

Fig. 2827.

The heavy flywheel then required necessitates an outer bearing at the extreme end of the shaft *beyond* the wheel. The engine thus ceases to be self-contained, and the greatest care must be taken with the foundations and with all adjustments, if the crankshaft is to run well with four or more bearings in line. The plain shaft of the ordinary coupled compound engine is thus more satisfactory for large powers when circumstances permit of its use. For smaller powers combined with high speeds and direct driving, as in the case of large centrifugal pumping engines for drainage and dock works; in dynamo driving where space is limited, as on board ship; and in similar work, the engine with the marine cranks is properly and preferably employed.

"PISTON SPEED.—The growth of the steam engine has been accompanied not only by a gradual increase of steam pressure, but of speed of crankshaft and of pistons. To-day the pistons of many steam engines move at velocities which engineers fifty years ago would almost without exception have pronounced impracticable. It is therefore interesting to note that in 1845 Mr. William McNaught, of Rockdale, gave a clear exposition of the laws which govern the successful use of high speeds in steam engines, showing by example how the piston speeds of the present day would be arrived at by the use of high steam pressure, high grades of expansion, and a proper adjustment of the weight of the moving parts of the engine in relation to the other conditions. So thorough was this exposition, that nothing clearer on the subject has been written for engineers than Mr. McNaught wrote over fifty years ago.

"In many high speed engines the required conditions are arrived at almost accidentally, or at least incidentally, and the engines run satisfactorily. A few engines are designed specially to fulfil the conditions of high speed, and many attempts are made at high speed without particular regard to *any* conditions. Such attempts usually result in plenty of trouble to all concerned. To ensure successful running at high piston speeds it may be generally accepted that an engine must not be heavily loaded; in other words, that there must be a considerable amount of expansion in each cylinder, and that there must be some approach to proper relations between the weight of the moving parts and the pressures at the beginning and the end of the stroke.

"It may also be accepted that high piston speeds are more easily used with long stroke engines, having a moderate number of revolutions, than with short stroke engines having high speed of crankshaft. The leading difficulty is the bringing of the moving parts safely and smoothly to rest at the ends of the stroke, and this trouble is minimized in practice by keeping the revolutions moderate and the stroke long; in other words, by meeting the difficulty fewer times.

"For the engines of mail steamers, naval cruising vessels, and express locomotives, high speed of piston is essential to enable great power to be obtained with moderate dimensions and weight. It must be remembered, however, that all such engines are closely under the supervision of highly trained engineers, having at their command facilities for making accurate adjustments, for doing small repairs, and for thorough examination and overhaul at frequent intervals.

"For ordinary industrial concerns in which engines are expected to run day by day, with little attention or interruption for repairs, more moderate piston speeds are to be preferred, from 350 in smaller to 500 ft. per min. in larger engines, the speed of piston increasing with the size, and more particularly with the length of stroke. Many large mill engines run at speeds considerably over 500 ft., but the stroke is invariably long and the speed of the crankshaft low, from 50 to 70 revolutions per minute. Engines with very long strokes are necessarily expensive, and require *very* large flywheels or heavy gearing to enable the low speed of the crankshaft to be changed for the higher speed usually required in the factory. A judicious combination of moderately high speed of crankshaft, fairly long stroke, and fairly high piston speed, help to produce an engine with all-round good qualities. Very high speed whether of crankshaft or of piston must be accompanied by careful adjustment of all moving parts, and careful skilled attendance. In case of neglect or accident, disasters are likely to be much more serious with high than moderate speed. It is fair to add that, when first cost is of no consequence, and when the attendance is good, long stroke engines may be expected to work with the highest mechanical efficiency; that is, they will transmit to the mill a higher percentage of the power developed in their cylinders than is possible with a short stroke engine working more revolutions. The frictional losses are less in the long stroke engine, but gain from this cause may be reduced by the necessity of introducing gearing to bring the revolutions up to the number required for the purpose of the mill.

"Steam economy is, doubtless, usually associated in the minds of steam users with certain forms of valve gear, chiefly of the more elaborate kind. It should be clearly understood that this economy may be obtained equally with the assistance of any one of very many valve arrangements, and nearly equally by the simplest, and by the most complicated. The claims made for the various patent valve gears are based on comparisons with the simplest of all valve arrangements, a single plain slide valve with a throttle valve regulated by the governor. With the pressures usually employed, and *with single cylinders*, this simple arrangement is confined to small engines or to those which run at very high speed. All other single cylinder engines have, in addition to the plain slide valve, some form of cut-off gear, either adjusted by hand or by the governor. *To use a single cylinder engine of any great size with any pressure above 40 or 50 lbs., and without some kind of cut-off gear, is absolutely wasteful.*

"If several engines are designed with equal skill, equally well made, arranged to use steam of the same pressure and to expand it to the same extent, the difference in economy due to the class

of valve gear employed will be small. The slight differences in economy found to exist between good engines are due less to mechanical than to thermal causes, to questions of temperature, condensation in cylinders, and radiation.

"Engines whose cylinders have four valves of the Corliss type, or of the improved double heat type (as in the Sulzer engines, for example), have, when properly designed, the most perfect distribution of steam mechanically, and yet almost equally good results have been recorded of marine, water works, and mill engines with slide valve gears, or with piston valves, which are simply cylindrical slide valves.

"*Automatic expansion or cut-off gears* are those in which the governor, acting directly on the cut-off gear, determines the amount of steam to be given to the cylinder for each stroke, according to the resistance of load. If the resistance increases, the speed of the engine falls very slightly; this falling off is communicated at once to the governor, more steam is permitted to enter the cylinder, and the speed returns to the normal. If, on the other hand, the load is reduced, the engine runs just a little faster, reducing the amount of steam supplied to the cylinder, and the speed again returns to the normal.

"*Throttle valve gears* are those in which the governor, acting directly on a throttle valve (usually arranged in combination with the ordinary steam or shut-off valve), determines the pressure at which the steam may enter the cylinder, according to the load on engine. If the load is lightened, the governor "throttles" the steam by reducing the area of the passages through the throttle valve. If the load is increased, the governor gives free passage, and in this way an approximation to uniform speed is maintained, even when the load varies considerably. Seeing that the governor is driven by the engine, it will be understood that absolutely uniform speed with a varying load is physically impossible; the speed *must* be a *little* wrong before the governor can help to put it right; and when the engine is running without any load, the speed *must* be a *little* higher than when the load is on. To suppose anything else is to endow a governor with brains and foresight. Good or bad governing is, therefore, a question of degree, and the permissible variation of speed under any circumstances is expressed by a percentage.

"When very steady running is demanded, or when the variation of load is excessive in short intervals, an extra heavy flywheel is usually employed to assist the governor. A heavy body moving at high velocity will for a time successfully overcome resistances which would eventually bring it to rest. The heavy flywheel overcomes these resistances till the governor has time to rearrange its parts and to provide more steam to deal with the heavier load. In the same manner, when the load is reduced, the wheel, by its inertia, gives time to the governor in which to reduce the steam supply.

"For ordinary driving, the flywheel should not be extravagantly heavy, as useless weight causes useless friction and waste of power; the arms and centre should only be strong enough for safety, the weight being accumulated in the rim. The value of a flywheel in governing varies in proportion to the weight of its rim, but increases as the cube of its velocity; hence the advantage of having large wheels which can be made comparatively light. If two wheels have equal weight of rim and make the same number of revolutions, but one is twice the diameter of the other, the governing value of the larger wheel is eight times that of the smaller. In other words, if the diameter of the rim can be doubled, its weight may be reduced to about one-eighth of that of the smaller wheel without diminishing the governing value, the power of the engine being the same in each case.

"The value of an automatic cut-off gear is greatest with simple cylinder engines and when the load is very variable. The value is less with compound engines than with simple, and when the work of expansion is effected in three cylinders, as in triple compound engines, such gears may, in the interests of simplicity, be dispensed with. The amount of expansion to be effected in any one cylinder being reduced, the distribution of steam can be effected by simple valves, as is done in the most economical marine engines. Even with two-cylinder compound mill engines of large size, remarkably good results have been obtained with properly proportioned cylinders, and a plain slide valve for each. In cases, therefore, where *simplicity of construction* is *important* and where the load is not very variable, there need be no hesitation in dispensing with automatic cut-off gear and using a cut-off gear variable by hand for simple cylinder engines, or even in dispensing with the cut-off gear altogether when the engine is compound, particularly for smaller sizes.

"In such cases a governor acting on a throttle valve must, of course, be used; and when the pressure is *high*, there need be no fear that the small amount of "throttling" by this valve will be detrimental to economical working.

"DETERMINATION OF POWER, DEFINITIONS OF HORSE POWER.—Engines are usually sold under some agreement as to horse power, commonly written H.P., or HP. This term is often used by purchasers of machinery without the qualifying adjectives which give it firm values, and no excuse is needed for attempting to make these values quite clear.

"*Nominal* HP. is a commercial term gradually becoming obsolete, and of no firmly authorized value. For the smaller classes of stationary engines N.HP. is understood to mean, in England, that ten circular inches of piston area are provided for each N.HP. Thus an engine with 10 ins. cylinder is called 10 N.HP., and one with 20 ins. cylinder is called 40 N.HP. The same method is used in naming the smaller classes of stationary compound engines, the low pressure cylinder being that measured. An engine with 20 ins. L.P. cylinder would be called 40 N.HP.; one with 16 ins. L.P. cylinder, 25 N.HP. These designations give, however, no idea of what an engine can really do, and would be better avoided altogether, but for the fact that some makers of machinery continue to use them.

"One engine may have a cylinder of 20 ins. diameter, but may be weak, light, and badly made, quite unable to run so fast, to use steam of the same pressure, or to transmit as much power as a better engine with only 18 ins. diameter of cylinder. From this it will be gathered that the diameters of cylinders do not fix the powers of engines any more firmly than the obsolete term N.HP.

"The proper terms to use in stating power are either Indicated HP., usually written I.HP., or Brake HP., written B.HP. I.HP. is the power exerted by the steam in the cylinder or cylinders, and measured by the steam engine indicator, an instrument easily applied to all but the smallest engines. In skilled hands the indicator gives a very exact idea of the power which an engine is capable of developing. The term I.HP. may, therefore, be safely used in buying, selling, or comparing the powers of engines. I.HP. $= \frac{APV}{33{,}000}$, or area of cylinder in inches multiplied by the mean effective pressure in pounds per square inch (as found by the indicator) and by the velocity of the piston in feet per minute, the result being divided by 33,000.*

"Now, if I.HP. is the power exerted by the steam in the cylinder, it is evident that the power which can be transmitted to the mill or factory is something a little less than this, because the friction of the engine itself, of its piston and of all its moving parts, must first be deducted. The remainder is termed the Brake HP. because it can, at least in the case of smaller engines, be measured by a friction brake or dynamometer, independently of the indicator. B.HP. may be shortly expressed as the power which an engine can give off for useful purposes at the end of its crankshaft, or at its flywheel rim. B.HP. $= \frac{UPV}{33{,}000}$, UP being the load in pounds just balanced by the brake at flywheel or brakewheel rim; V the velocity of the flywheel or brakewheel at the rim in feet per minute.

"A few remarks as to how the owner of a factory may find the I.HP. which he requires may be of service. If it is merely a question of replacing an old engine or engines by new, the I.HP. of the old engines should be taken when *all* the driven machinery is in full work. Thus the maximum power required for the factory as it stands will be obtained. To this must be added, accord-

* The British standard horse power is 33,000 pounds raised one foot high in a minute.

ing to judgment, an allowance for extensions, or for new machinery to be driven, remembering always that an engine much too large for its work will be *wasteful of steam*, and that, on the other hand, the consequences of choosing an engine too small may be very serious, involving *much trouble* and *waste of money*.

"If the factory is a new one, the owner should obtain from the makers of the several machines which it will contain a distinct statement of B.HP. required for each. The power required to drive many special machines is unfortunately imperfectly known and too often very loosely stated, hence the necessity of insisting on a statement of the Brake HP. required for each machine. It is impossible to make this matter too clear. Cases like the following have occurred time after time. A maker of special machines says they require a certain HP. to drive them; rightly or wrongly the purchaser has the idea that the power named is I.HP., or at most B.HP. He purchases an engine which proves too small. When the engine builder has shown that the engine is to the purchaser's requirements, the matter is referred back to the maker of the special machines, who says that the power named by him was N.HP.; the inference to be drawn from this statement, according to the special machine man, being that the B.HP. to be provided should be twice if not three times the N.HP. Cases so absurd, and yet so serious, would not occur if purchasers would take skilled advice before ordering. To the power required for all machines which may work at one time must be added an allowance for driving shafting, gearing, and for future extensions. When it is stated that the power required *merely to move* the engine, shafting, and gearing in a factory amounts in some cases to nearly one-third of the whole power developed, the necessity for having these parts arranged in a simple and straightforward manner will be apparent. Badly arranged methods of driving cause a constant waste of fuel. If the shafting and gearing are reasonably well arranged, the power required to drive these should never exceed one-fourth of the whole. It will be inferred from what has been said, that in the absence of experience an engine can only be safely chosen for a new factory by allowing a considerable margin of power, and that, where possible, it is prudent to fall back on actual practice and to find out the power allowed in cases nearly similar.

"There is one more very important matter. The purchaser should not only state the maximum I.HP. or B.HP. which he is likely to require; he should state the average power which he is likely to require day by day. This daily work should, of course, be performed with the greatest possible economy of steam, and if merely a bare statement of I.HP. or B.HP. is given, one maker may tender an engine just able to give the power as a maximum which another builder, more thoughtful for his customer's interests, may offer the engine to give the stated power with the highest degree of economy. The latter engine will probably be the more expensive, and unless the purchaser is advised by an expert he will probably choose the smaller or inferior engine, to his own loss and that of the maker who really offers the most suitable engine."

THROTTLING ENGINES.

A throttling engine is one in which the governing or regulation of the engine speed is maintained uniform by means of a throttle valve mounted on the steam pipe, and as close to it as possible. Fig. 2828 represents a throttle valve in section; it is merely a

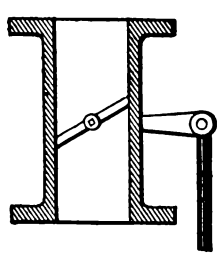

Fig. 2828.

circular disk or vane, fitting the bore of the steam pipe when closed, and is partly revolved by the governor to open or close, so as to regulate the supply of steam to the steam chest. In the illustration it is shown closed; but when the engine is not running, and the governor balls are down, it stands parallel with the bore of the steam pipe, and remains so until the engine has very nearly attained its proper speed, when it slightly closes; and after that, any increase of engine speed is checked by the throttle valve partly closing, and, therefore, reducing the supply of steam, reducing the steam pressure in the steam chest, an action that is termed throttling, or wire drawing the steam, which is undesirable, inasmuch as that, when wire drawing is taking place, the boiler is consuming fuel to make steam at a higher pressure than it is being used at. For governing purposes, therefore, the amount of wire drawing is kept at its lowest limit consistent with effectually regulating the engine speed.

On the other hand, however, if the steam has entrained water in it from the boiler *priming*, or from some other cause, wire drawing by reducing the pressure, and, therefore, the temperature of the steam, causes any entrained water to flash into steam, and is in that respect economical.

The simplest form of engine is that having a D-slide valve and a throttling governor, an example being given in Fig. 2829, which is a vertical engine constructed by the New York Safety Steam Power Co.

A horizontal engine of this class by Houston, Stanwood & Gamble, of Cincinnati, Ohio, is shown in Fig. 2830, its D-slide valve and the cylinder ports being shown in section in Fig. 2831. *a* and *b* are the cylinder steam ports, and *c* the cylinder exhaust port, while *e* is the valve cavity, or exhaust port. The action of this class of valve will be investigated presently.

THE CONSTRUCTION OF THE PISTON.—In Fig. 2832, R represents the piston rod and H the piston head; F representing the *follower*, which is bolted to the piston head. Between H and F is the junk ring, which is provided with a groove, into which is sprung two packing rings, which, being sprung in, and therefore under compressive tension, fit closely to the cylinder bore and keep the steam from leaking past the piston from one end to the other of the cylinder.

The packing rings are split so that they may be sprung in to give them the tension referred to, the split being shown at *a*. When the split is closed, the plate and spring at *b* are filled beneath it.

In the larger sizes of this engine, the steam pressure on the back of the slide valve is partly relieved or balanced by the following construction. Figs. 2833 and 2834 show the cylinder with the steam chest cover removed to expose the valve, whose back is circular and fits into a ring R which has spiral springs *s* beneath it to press it against the face of the steam chest cap or cover, thus excluding the steam pressure from all that part of the valve area that is enclosed within the area of the ring R. A pipe gives egress to any steam that might gradually accumulate within the ring and destroy its efficiency.

Other examples of the general form of throttling engines are as follows:

Fig. 2835 represents a side crank throttling engine constructed by the Ames Iron Works, of Oswego, New York.

In a side crank engine only one of the bearings in which the crankshaft revolves is upon the bed or frame of the engine, the other or outward bearing mounted upon an independent foundation. The governor is upon the top of the cylinder and is actuated by a belt or strap driven by a pulley upon the crankshaft.

A centre crank engine is one in which both the crankshaft bearings are provided on the engine bed or frame, the crank journal being between the two crank bearings, as in Fig. 2836, which is also built by the Ames Iron Works. Both these engines have common slide valves.

SLIDE VALVES.—The simplest form of valve employed for governing the ingress and egress of steam to the cylinders of steam engines is what is known as the simple "slide valve," the "common slide valve," or "D valve," all three terms meaning the same thing. This is the form of valve in general use upon locomotives, small stationary engines, and steamboat engines; and in a modified form, and in connection with a second valve, upon large marine and stationary engines.

When the power of the engine requires to be accommodated to

suit variations in the amount of load the engine is required to drive, the slide valve is acted upon by various mechanical devices which alter the length of its stroke or travel across the ports of the cylinder, and the shorter or less that travel is, the earlier in the piston stroke the supply of steam to the piston is cut off, and this is accomplished in two principal ways : first, in locomotives, marine engines, and stationary engines where the direction in which the engine will run must be under the control of the engineer, a link motion is used for the two purposes of varying the engine power and also its direction of revolution ; and second, upon those stationary engines in which the direction of engine revolution is always the same, but the power of the engine requires to be modified to suit any variations that may occur in amount of the load the engine is to drive, which is accomplished

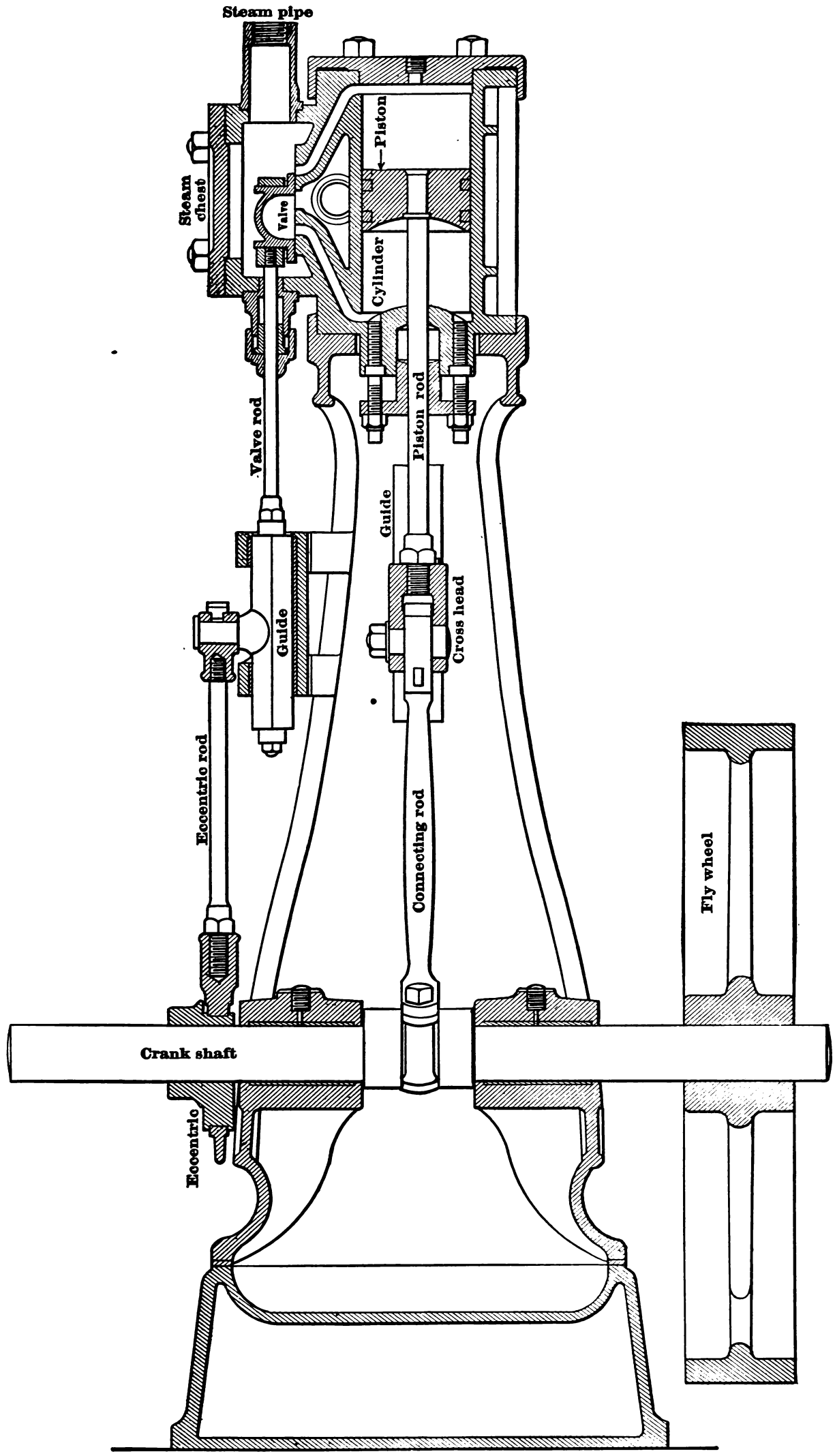

Fig. 2829.

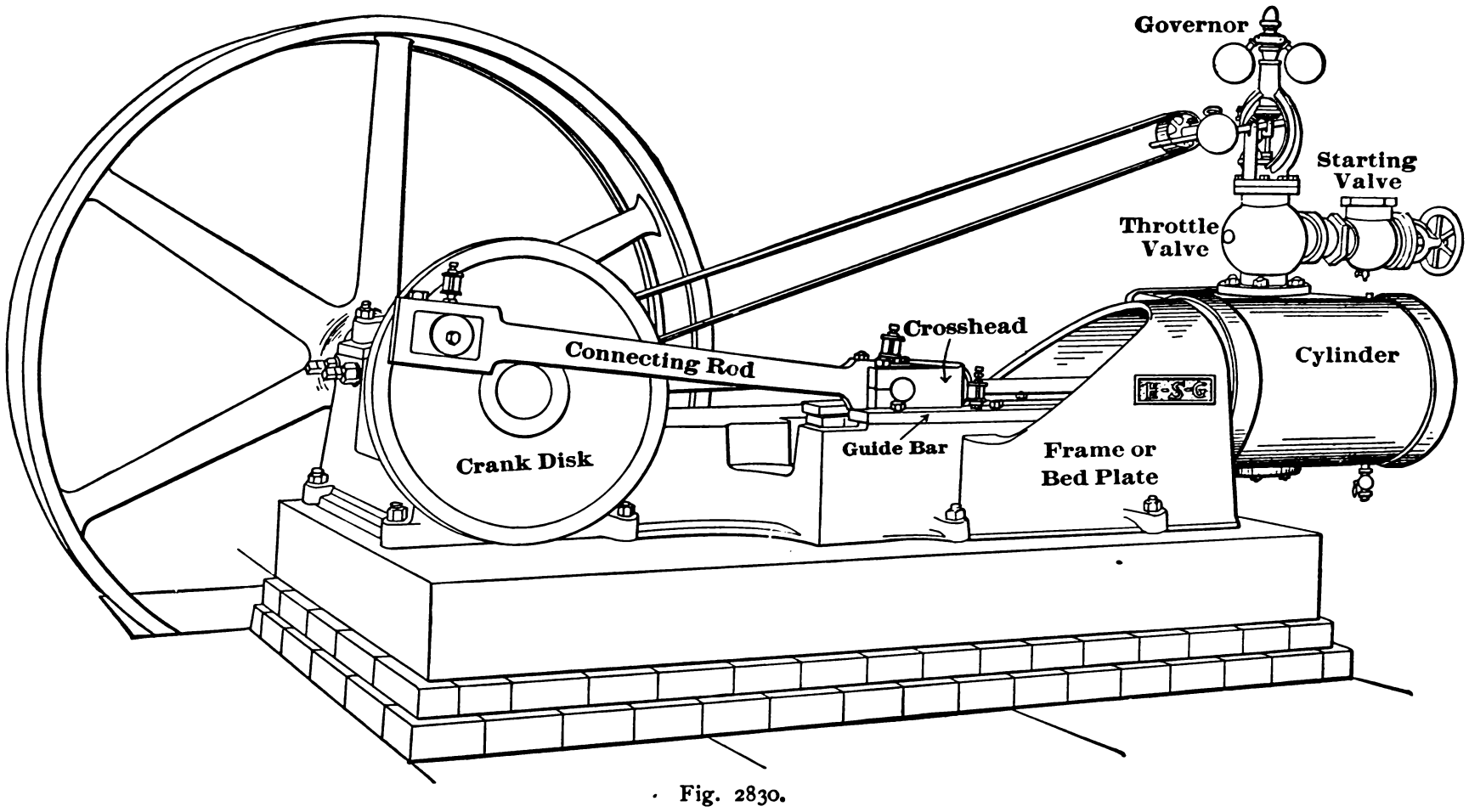

Fig. 2830.

by mechanism that will automatically (while the engine is running) move the eccentric that drives the valve in a manner that will reduce its amount of eccentricity, and therefore cause it to reduce the travel of the valve.

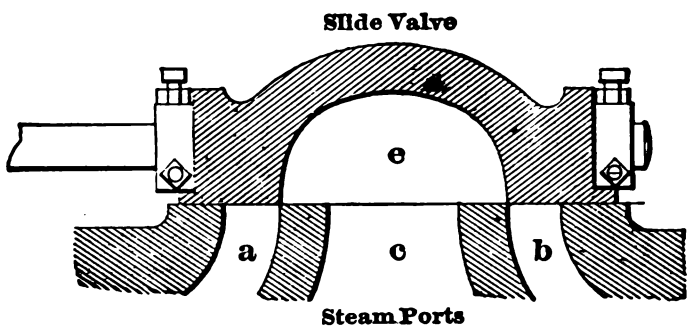

Fig. 2831.

Now the action of the valve in distributing the steam is to all intents and purposes the same under a given amount of travel, no matter how that travel may have been obtained so long as it has been effected by a continuously revolving eccentric or crank;

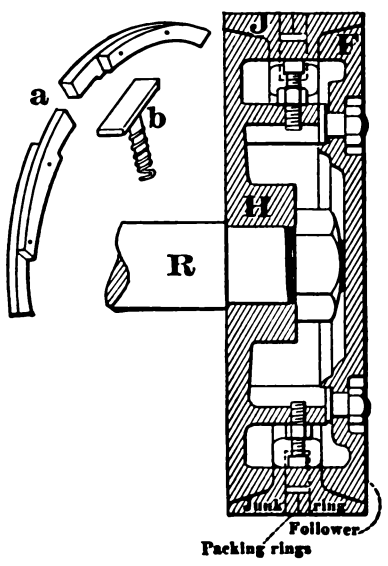

Fig. 2832.

hence the action of valve mechanisms may be best understood by beginning with a valve in its simplest form, and continuing its examination under varying forms and conditions.

Figs. 2837 and 2838 may be taken as fairly representative of

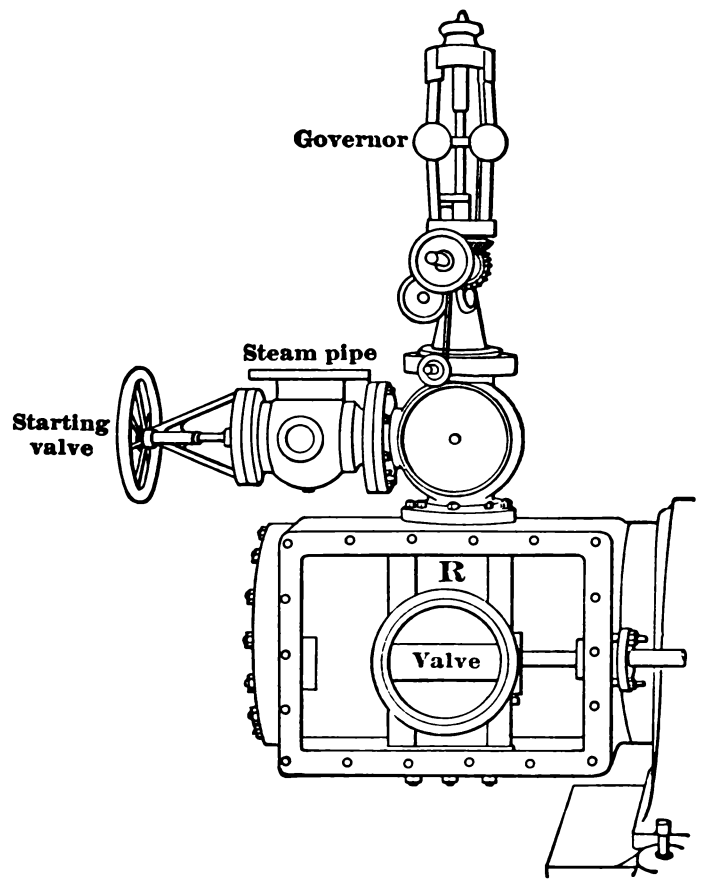

Fig. 2833.

the form and the conditions under which the D valve is ordinarily employed.

The piston is shown at the end of a stroke at the head end of the cylinder, *a* and *c* representing the two steam ports, and *b* the cylinder exhaust port of the valve, *e* and *f* being the steam edges

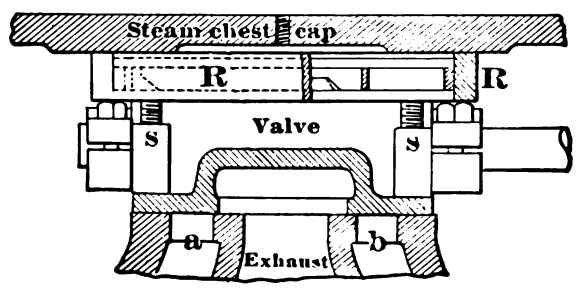

Fig. 2834.

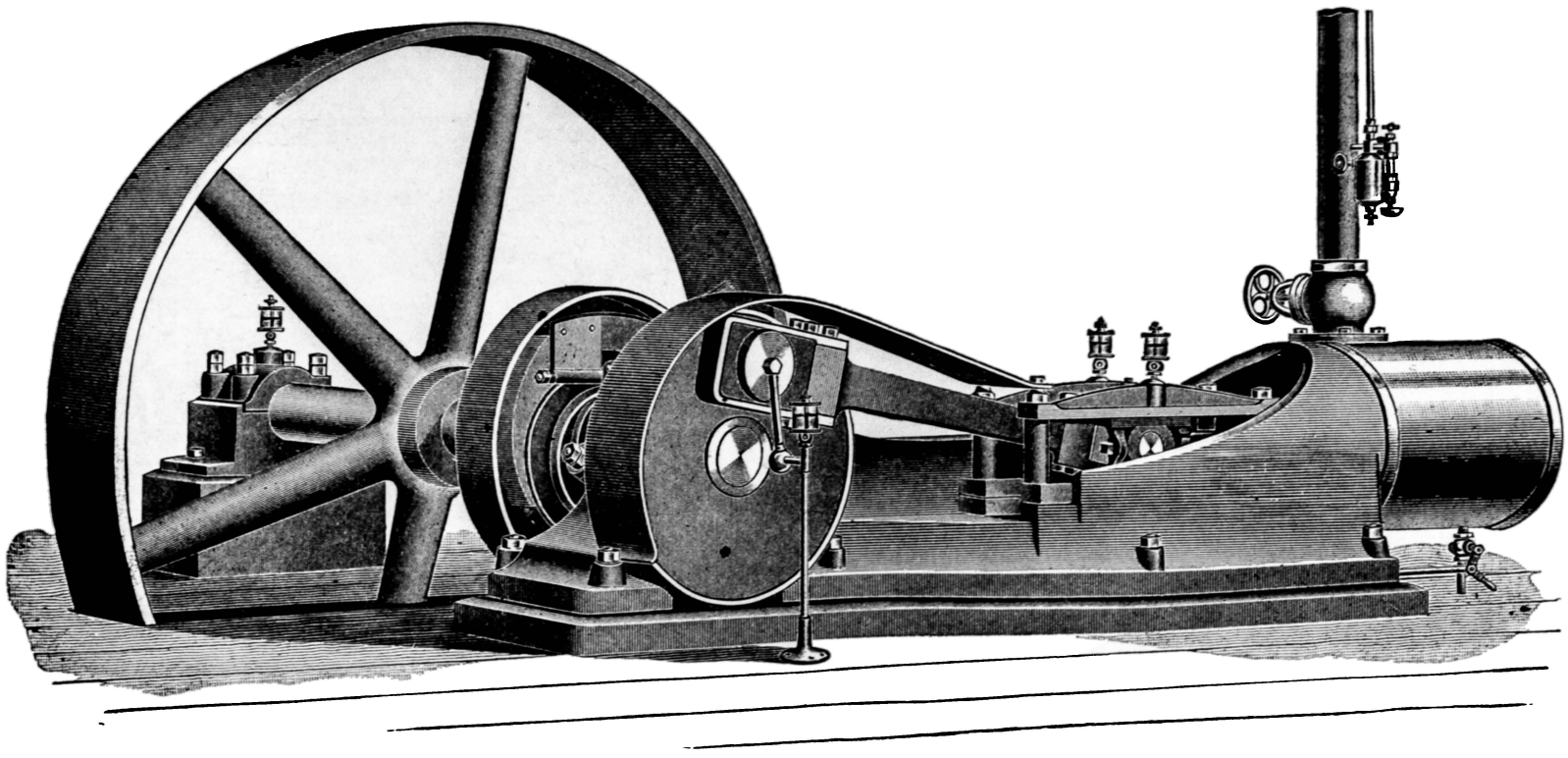

Fig. 2835.

of the valve; that is to say, the edges which control the point in the piston stroke at which the steam shall be permitted to enter the cylinders, this point being affected also by the position of the eccentric (that drives the valve) with regard to the engine crank, as will be seen hereafter.

The piston being shown in the figures at the head end of a stroke, the crank will be on the dead centre, and the amount the valve has opened the port, as shown at *e*, when the crank is in this position, is called the *lead*.

The action of a piston valve having the same amount of lap travel, etc., is precisely the same as that of a flat valve; Fig. 2839, representing a cylinder with a piston valve V′ on one side, and an ordinary flat valve V on the other.

In some cases piston valves are so designed that the steam is admitted in the middle of the valve and the exhausts take place at the ends, Fig. 2840 representing an instance; but this makes no difference to the action of the valve.

Referring to this Fig. 2840, the exhaust in this case passes through the valve; but the action of the valve is precisely the same under equal conditions of lap, lead and travel.

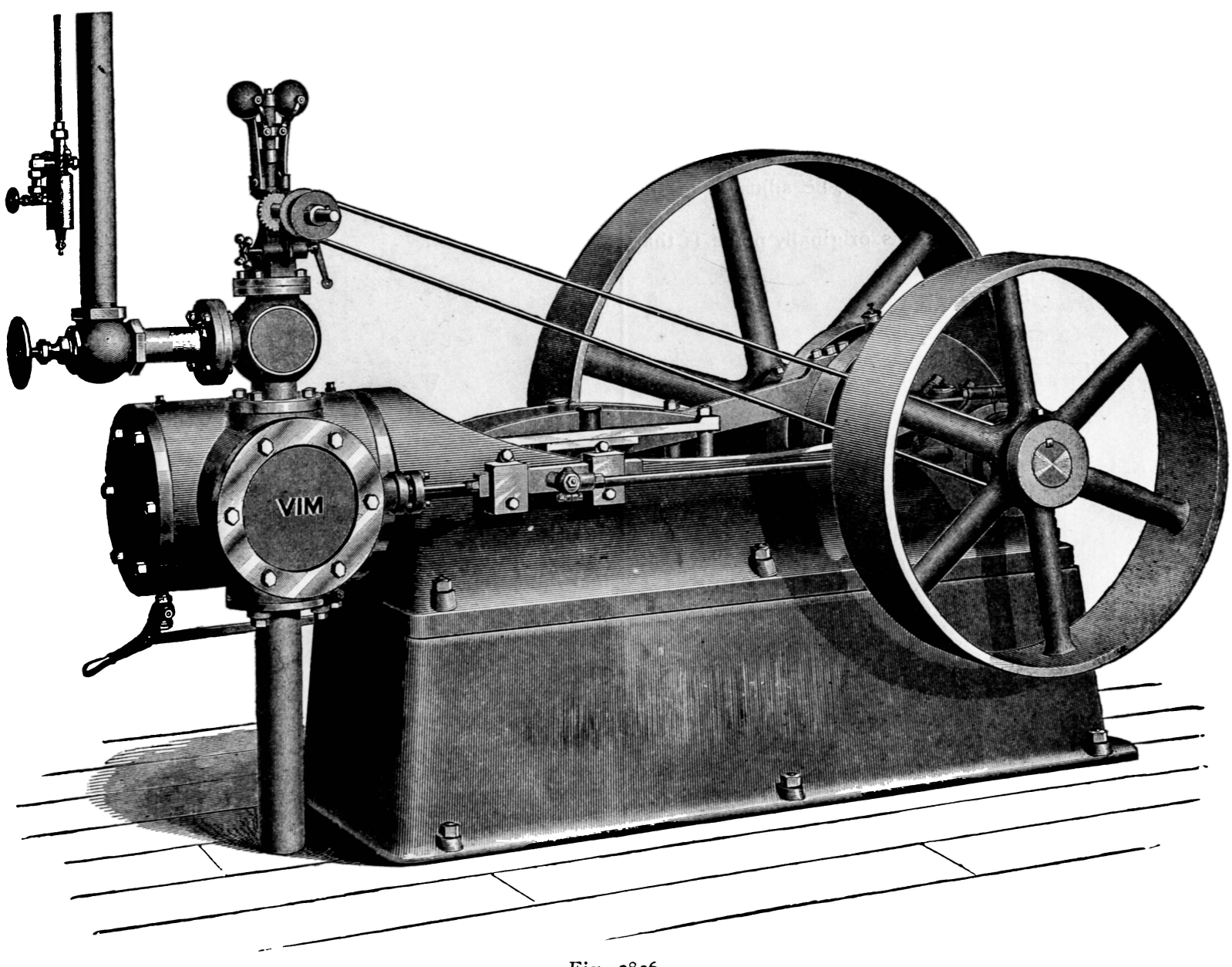

Fig. 2836.

As the piston valve is surrounded by steam, it is not unduly pressed to its seat or bore in any direction, and will, if accurately fitted to its seat or bore with a smooth surface and proper lubri-

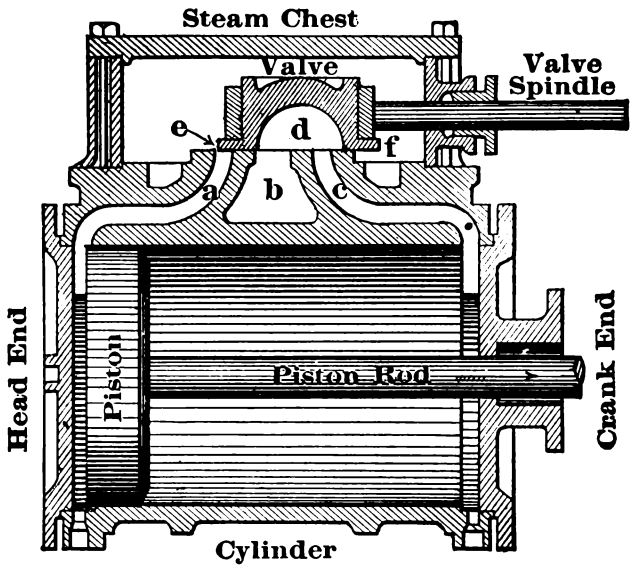

Fig. 2837.

cation, remain steam tight for a very long time; but, nevertheless, constructions to enable the wear to be taken up are sometimes provided. Thus, in Fig. 2841, screwing up the nuts *a a* expands the rings *b b*, which may, therefore, be adjusted to the required fit.

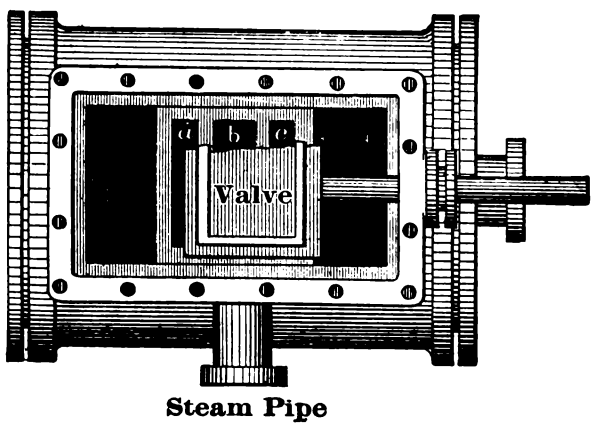

Fig. 2838.

The form in which the slide valve was originally made is that

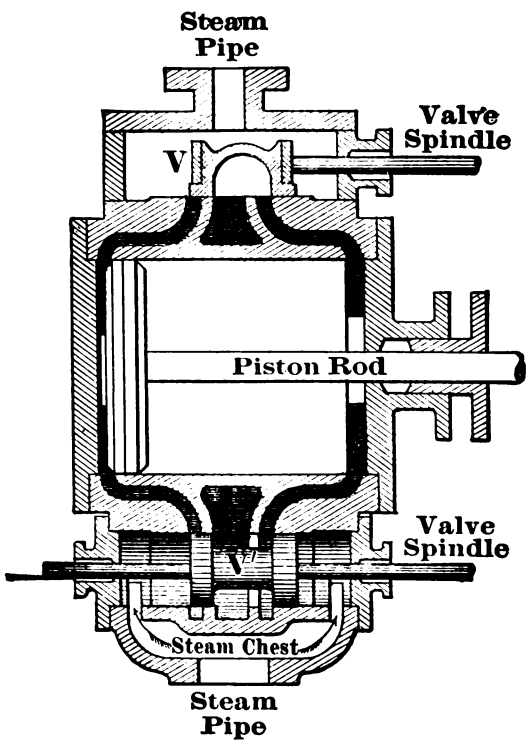

Fig. 2839.

illustrated in Fig. 2842, only the valve and sufficient of the cylinder ports to make the matter clear being shown. This is a valve without lap; that is to say, the width of the valve from *e* to *f* does not exceed the extreme width between the outer edges of the steam ports *a*, *c*. The edges *g*, *h* of the valve exhaust port *d* are

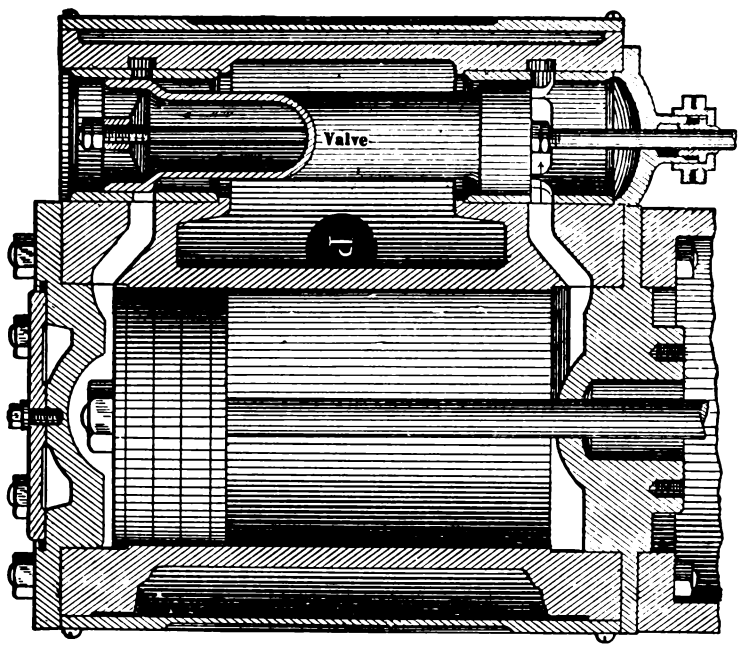

Fig. 2840.

called the exhaust edges, and their width apart (or, in other words, the width of the valve exhaust port) is usually made such that

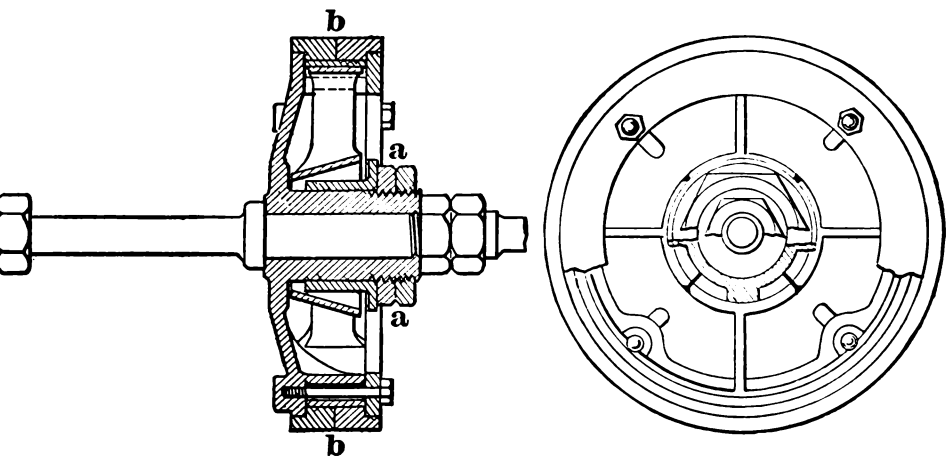

Fig. 2841.

when the valve is in the middle of its stroke, as in the cut, it will just cover both the ports *a* and *c*, which will, therefore, be closed.

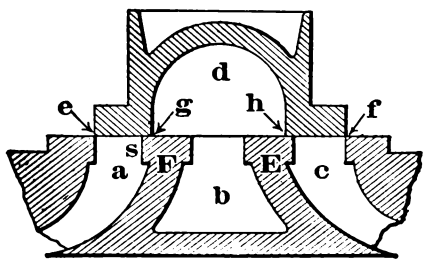

Fig. 2842.

The main defects of a valve without laps are, first, that it does not permit the steam to escape sufficiently free from the cylinder; that it does not admit the steam in sufficient volume; and that it

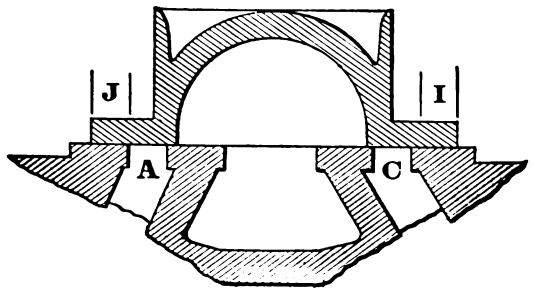

Fig. 2843.

does not use the steam expansively, and is, therefore, wasteful of steam. All these three defects are remedied by giving steam lap to the valve, as shown in Fig. 2843, the lap being shown for

one end of the valve at I, and for the other at J, the amount of lap being in this example equal to the width of port. The addition of steam lap alters the whole action of the valve, because it necessitates that the amount of valve travel be increased; hence we may now examine into the manner in which the steam is admitted and exhausted under varying conditions of valve lap and travel, using a form of diagram that will be found exceedingly simple and efficient, and that has been obtained by the use of a full-sized skeleton engine, moving the piston inch by inch throughout the full steam stroke and also throughout the full exhaust stroke, and measuring for each piston position the amount of the port opening.

* Thus, in Fig. 2844, the line A A represents two things—first, the length of the piston stroke drawn to scale (in this example one-

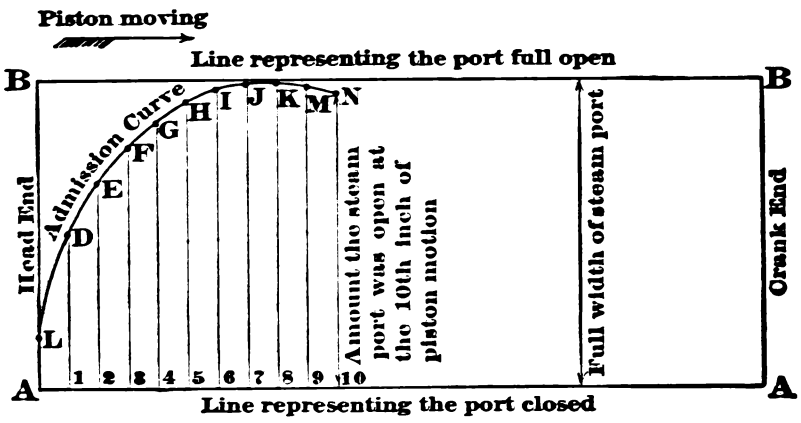

Fig. 2844.

eighth full length); and second, the edge *e* of the steam port *a* Fig. 2842. The figures 1, 2, 3, etc., represent inches in the piston stroke. The line B B represents the edge *s* of the steam port *a*, hence the distance between A A and B B is equal to the full width of the steam port. Now suppose the piston to be at the head end of the cylinder, and the crank on the dead centre, and the amount of valve lead to be ¼ inch; then at a vertical distance of ¼ inch we mark a dot L showing that the steam port is open to the amount of the lead. Moving the piston one inch, that is to the figure 1 on the diagram, we measure the amount the steam port is open and mark the dot at D, the height or distance from dot D to the line A A being the amount the port is open when the piston is at position 1, having moved an inch from the beginning of its stroke. Similarly the dot at E shows in its height from line A A the

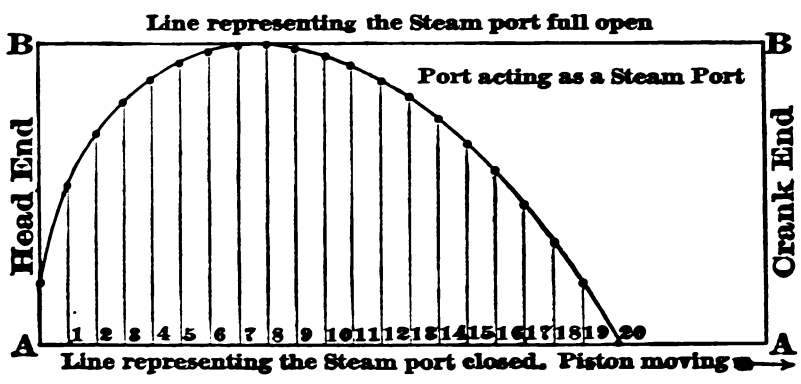

Fig. 2845.

amount the port is open when the piston has moved to its 2d inch of stroke, and so on; and through these dots we draw a curve showing the amount the steam port was open at any particular point in the piston stroke. In the figure the process is only carried out to the tenth inch of piston motion, but it is continued in Fig. 2845, where a curve is drawn through the dots, which may be termed the admission curve. At the twentieth inch of piston motion the curve meets the line A A, showing that the port is closed and the point of cut-off is reached, the expansion having begun. The admission curve now becomes a line running coincident with the line A A until the point of release is reached and the port opens to the exhaust.

* From "The Slide Valve."

To continue our diagram we must now pass to the action of the valve in effecting the point of release and opening the same port to the exhaust during the return stroke of the piston.

In Fig. 2846, then, the line A still represents the port closed, and in our last diagram we saw that the point of cut-off was at the twentieth inch of piston motion, and this we mark there by a dot on the line A A; continuing the piston motion until the point of release occurs, we mark a second dot on A A at 22½ inches of piston motion; the period of expansion was, therefore, 2½ inches. From this point the port is being opened for the exhaust, and we see from the dot at *x* that when the piston had finished its stroke and arrived at the crank end of the cylinder, the port had opened to the exhaust (from the line A A to *x*) three-quarters of its width. The diagram now runs along the line C C, the exhaust port being full open until the piston had made 16 inches of its return stroke, after which point the valve moves to close the exhaust and effect the compression which occurs when the piston has moved 21 inches, as shown by the dot at *y*, the port being closed, and shutting in the cylinder whatever steam had not already escaped and compressing it in the cylinder. This compression serves two purposes—first, it prevents the piston, crosshead, and connecting rod from striking a blow when their direction of motion is reversed; and secondly, it fills the clearance and the steam port with steam at a pressure that will depend upon the amount of compression there is, and which may be made so much as to force the valve away from its seat against the pressure of the steam on the back of the valve.

Referring again to the first, suppose the piston to have been

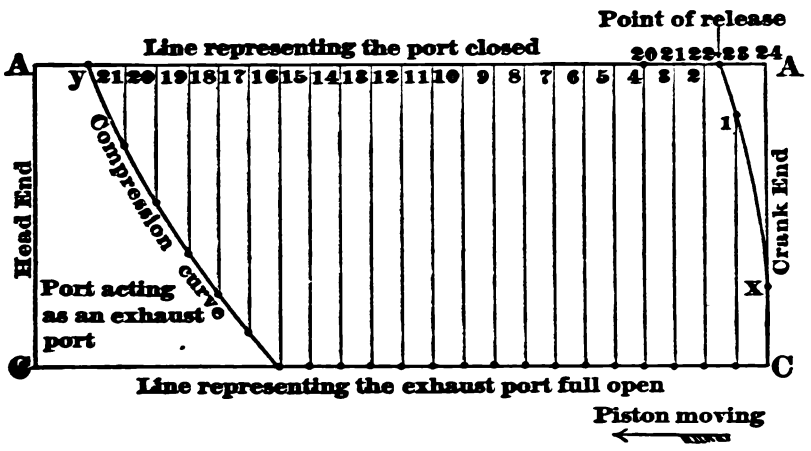

Fig. 2846.

pushed by the steam to the head end of the cylinder, and the bearing of the crosshead journal and also of the crankpin will be against that half of the crankpin brass or bearing that is nearest to the crankshaft; so soon, however, as the steam attains sufficient pressure in the other (and in this case the head) end of the cylinder, the contact between these journals and their brasses or bearings will be on the other sides, and if there is any lost motion between either of these journals and its brasses or bearings it will be taken up with a blow. The compression and the lead, however, cause that lost motion to be taken up gradually and before the piston has terminated its stroke, so that by the time it has done so the contact between the crosshead and crankpin journals and their brasses is on the side they will be during the next stroke.

But even if there were no lost motion between the journals referred to, there would still be a dull thump at each end of the piston stroke, if there were no compression and no valve lead, because the brasses or bearings for those journals must be left loose enough for the oil to pass around them; and this looseness, almost infinitestimal though it be, will cause a dull thud or thump, as before stated.

Another advantage of compression is that, as the steam is compressed, its temperature increases, thus heating up the cylinder walls and preventing the condensation of the steam that occurs from the "live steam" (as the steam in the steam chest is called) entering a cylinder that has been cooled during the exhaust period.

The loss that occurs from cylinder condensation is recognized as the greatest that occurs in the use of steam in a steam engine.

Referring again to the diagrams, Figs. 2845 and 2846, we may combine them, making a single diagram, as in Fig. 2847, that will show how freely the steam was admitted, how full the supply was, the amount of expansion, the point of release, the freedom of the exhaust, and the point of compression; while the least alteration of the valve lap or travel will so alter the shape of the diagram that a mere glance at it will at once show what alteration has been made. Suppose, for example, the valve is such as was shown in Fig. 2842, having no lap and just enough travel to open the ports to their full widths, and the form of the diagram will be an

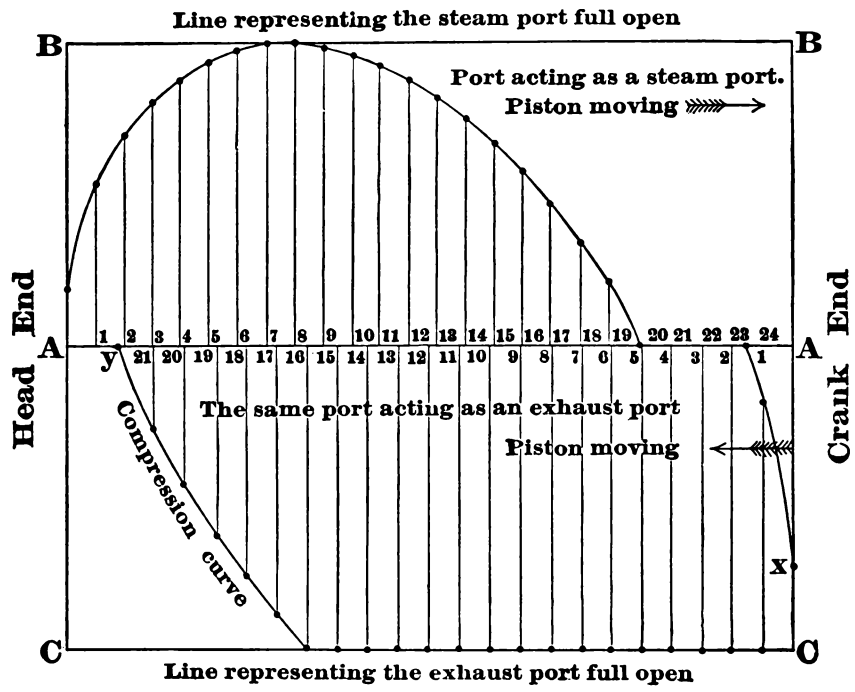

Fig. 2847.

oval, such as shown in Fig. 2848, from which we see that the steam port did not open to its full width until the piston had travelled half its stroke, and therefore that the supply of steam was insufficient. Moreover, the steam has not been used expansively, and to remedy these defects we must give the valve steam lap and a corresponding increase of travel. Let the dimensions remain the same as for Fig. 2848, except that the valve be given ¾ inch of lap and its travel increased so that it shall, as before, move far enough to just fully open the steam port, and a diagram of the port openings is shown in Fig. 2849, from which we per-

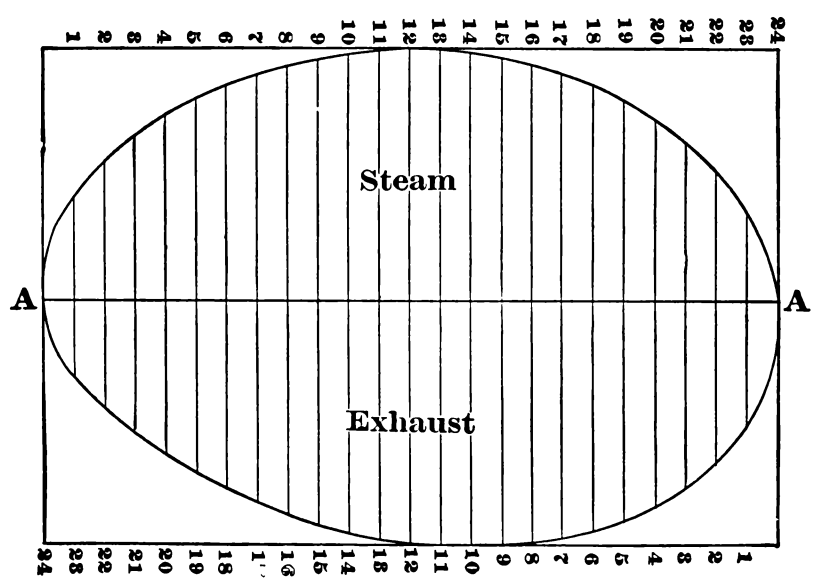

Fig. 2848.

ceive that by giving lap to the valve the steam port has opened much quicker, having been wide open when the piston had reached its 7th inch of stroke; we also see that when the piston had moved 19½ inches, the port was closed and the steam worked expansively for three inches of the stroke, the point at which it was released by the port opening to the exhaust being at the 22½ inch of piston stroke. The exhaust is nearly full open by the time the stroke is completed, and remains full open for 16 inches of the return stroke, the valve closing the port for the compression at the 22d inch of the stroke.

The addition of steam lap to the valve has, it will be seen, altered the whole form of the diagram, and it will be found that the same will be the case by any other alteration that may be made in the valve travel, lap, etc.

This is, indeed, the great advantage of this form of diagram.

In Fig. 2850, for example, is a diagram of a valve motion, from which we perceive at once that the valve had overtravel, or, in other words, more travel than was sufficient to just fully open the port, which is apparent from the fact of the top or admission

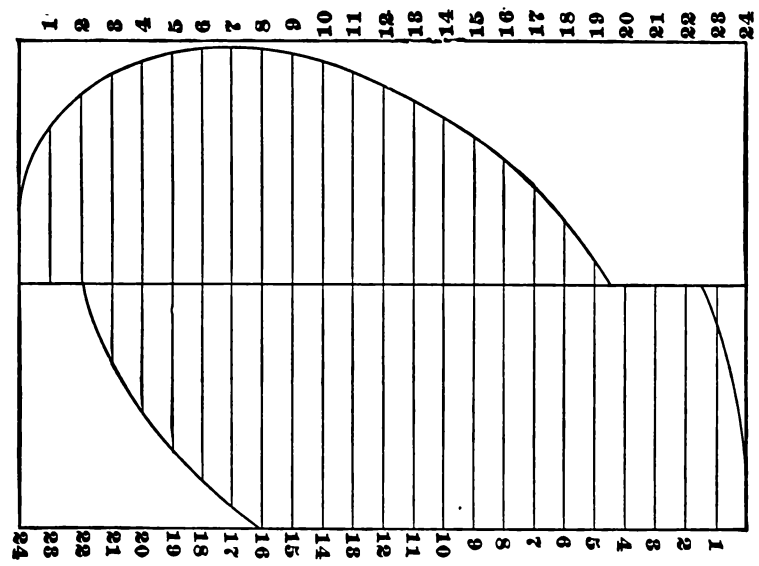

Fig. 2849.

curve *e e e* being cut off by the line B B, which is distant from A A to the full amount of the width of the steam port, and as the diagram curve *e* would pass, if continued, above the line B, at the 2d inch of piston motion, it shows that the steam edge of the valve, after having left the port full open, travels beyond it, over the bridge, and comes back to it again at the 17th inch, the steam port remaining full open during these 15 inches of piston motion.

Next, the diagram shows the port to have been opened much quicker for the admission of steam, and closed much quicker for

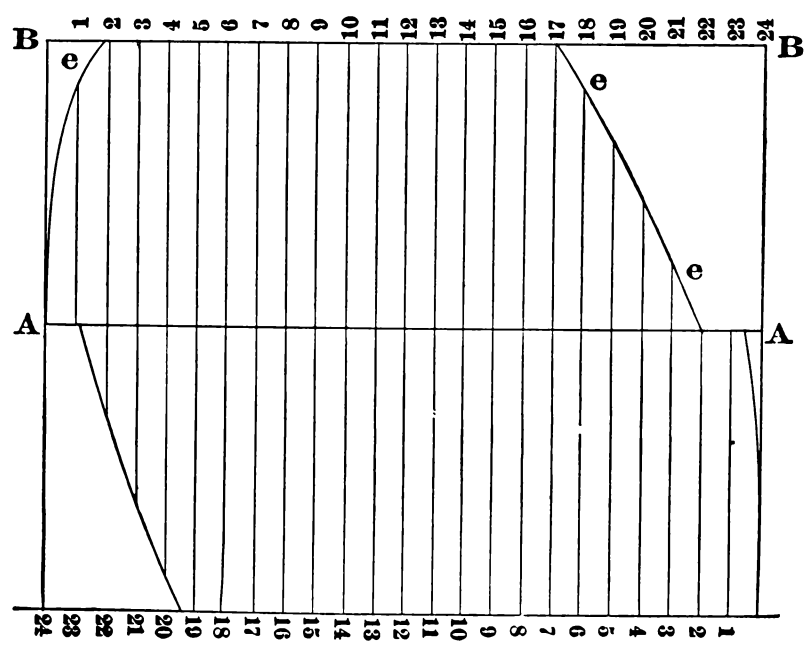

Fig 2850.

the cut-off, both points of advantage, because they give a fuller supply of steam during the "live steam" period, as the period during which the steam is passing from the steam chest into the cylinder is called.

The precise effect of the valve being given, overtravel and the difference it makes to the power of the engine may be shown, however, upon two diagrams of valve motions precisely alike, except that one has overtravel and the other just sufficient travel to fully open the ports for the admission, the proportions being as follows:

	Inches.
Width of steam port	$1\frac{1}{4}$
Lap of valve	1
Lead of valve	$\frac{1}{4}$
Travel of valve (Fig. 2851)	$4\frac{1}{2}$
Travel of valve (Fig. 2852)	$5\frac{1}{4}$
Width of valve exhaust port	$1\frac{1}{4}$
Width of cylinder exhaust port	$3\frac{1}{2}$
Width of bridge	1
Length of connecting rod	60

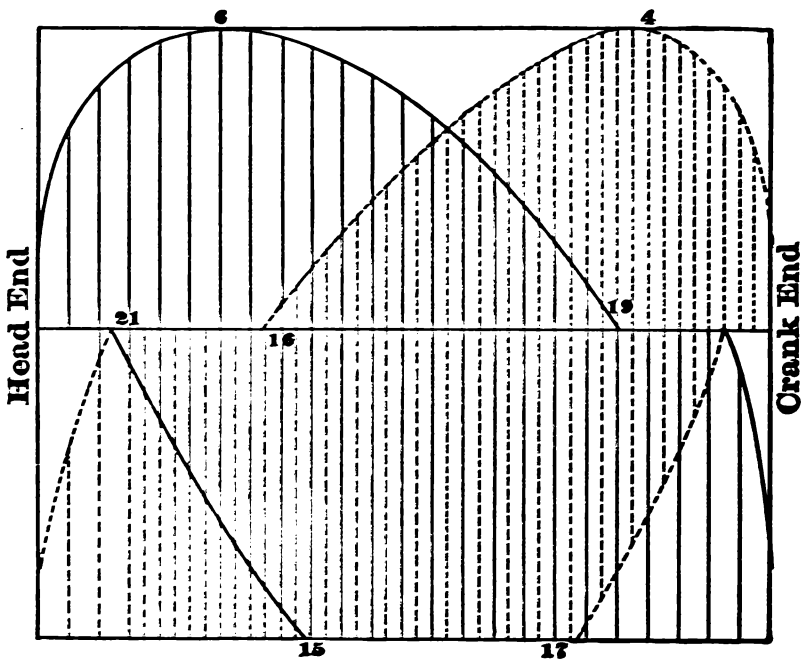

Fig. 2851.

Fig. 2851 is a diagram of the distribution of the steam by the valve with $4\frac{1}{2}$ inches travel, and Fig. 2852 of the distribution with $5\frac{1}{4}$ inches travel, and the results may be tabulated as follows:

Travel.	Piston Motion before Port Opened Full.	Piston Motion when Cut-off Occurred.	Amount of Expansion.	Steam Followed Piston.	Amount of Compression.
$4\frac{1}{2}$ in.	$6\frac{1}{2}$ in.	19 in.	$3\frac{1}{2}$	$22\frac{1}{2}$	$1\frac{1}{2}$
$5\frac{1}{4}$ in.	$1\frac{1}{2}$ in.	$20\frac{1}{4}$ in.	$22\frac{1}{2}$	$22\frac{3}{4}$	$1\frac{1}{4}$

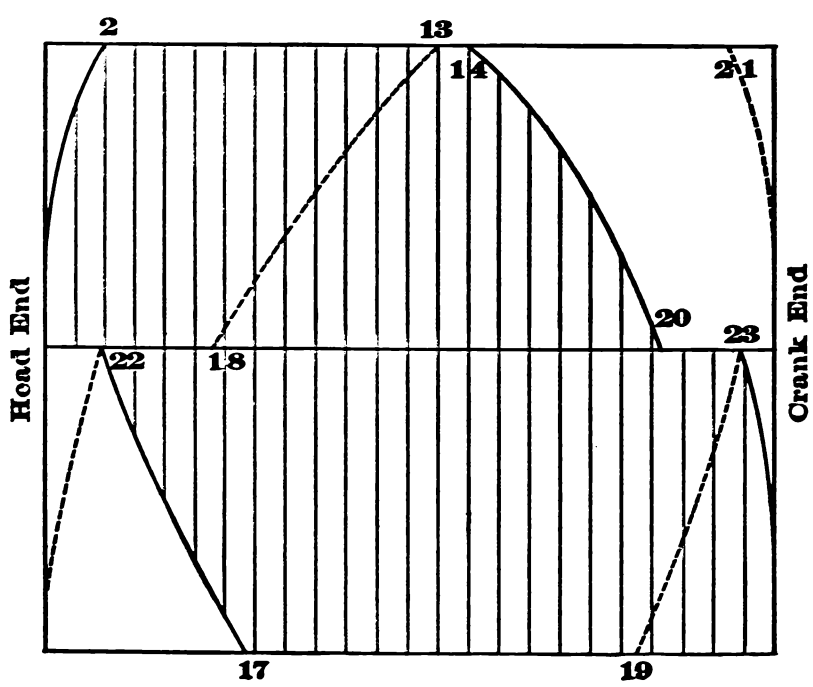

Fig. 2852.

Here we find that the overtravel gave a full supply of live steam $4\frac{3}{4}$ inches earlier in the piston stroke, and kept it up during 12 inches of piston motion, the reclosure of the valve for the cut-off being through $6\frac{1}{4}$ inches of piston motion; whereas, in the case of the shorter travel, the port is practically full open during only about an inch of piston motion, and the reclosure extends through 11 inches of piston motion. Comparing the 6 inches of motion during which the piston is moving at its fastest, and therefore requires its greatest steam supply (viz., from the 9th to the 15th), and the effective port area is nearly double for the increased travel, and yet the steam is wire drawn, as may be seen on any indicator diagram taken from this class of valve.

The next advantage (so far as the power of the engine is concerned) due to the overtravel is that the steam follows the piston $1\frac{1}{4}$ inches more of the stroke.

These are advantages only in so far as they enable an engine to start under a heavier load, a matter of great importance sometimes, as in the case, say, of a locomotive.

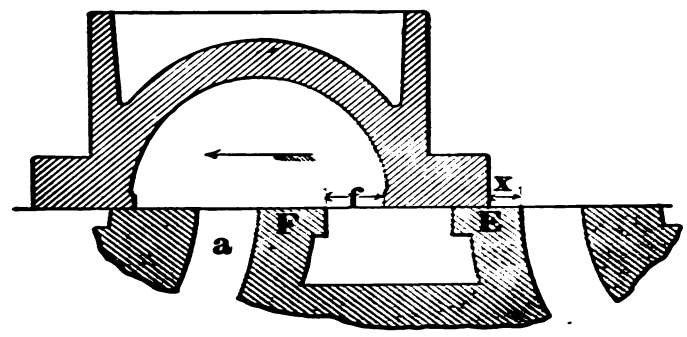

Fig. 2853.

On the other hand, the overtravel has decreased the amount of expansion and therefore increased the steam consumption. This brings us to a consideration of the desirability of regulating the full travel of the valve to conform to the requirements of the engine. When the latter is required to run backward or forward at the will of the engineer, and to cut off the steam at different points in the piston stroke, as is the case in locomotives and marine engines where a link motion is used, giving the valve overtravel makes the engine, as we have seen, more powerful at starting.

So soon as the link is lifted or shifted so as to reduce the valve travel to just open the steam port fully and no more, the valve

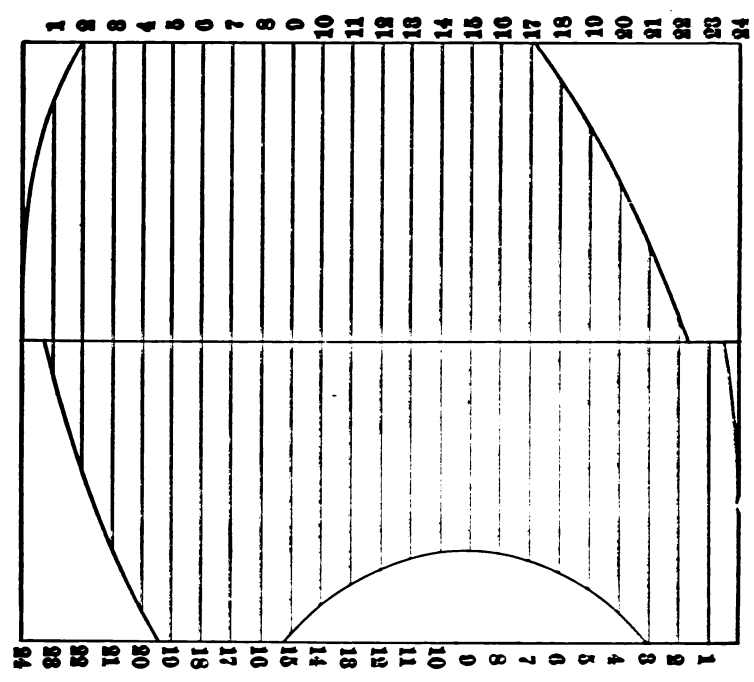

Fig. 2854.

action is precisely the same as though there was no overtravel when the link is in full gear, and it follows that the only effect of overtravel upon an engine having a link motion or other mechanism that will either act automatically or may be set to shorten the valve travel to hasten the point of cut-off, is to enable the engine to start under a greater load.

In an engine whose valve has a fixed amount of travel there is no advantage in overtravel, since it reduces the amount of expansion, and is, therefore, wasteful of steam.

* In giving overtravel to a valve, care must be taken not to partially reclose the exhaust in the manner shown in Fig. 2853, in

* From "Modern Steam Engines."

which it is seen that the steam edge *e* of the valve has passed so far beyond the port *a* as to reduce the exhaust opening at F to less than that at the port *a*, in which case the effective exhaust opening is that at *f*, the amount of overtravel being denoted at *x*. This may obviously be remedied by widening the cylinder exhaust port by cutting away the inside edges of the bridges E and F, thus widening the cylinder exhaust port.

But there are occasions in which such partial reclosure of the exhaust may be beneficial, as, for example, when the fuel to be burned in the boiler firebox requires more chimney draught than would be obtained naturally, in which case the exhaust pipe being carried to the boiler chimney, and the exhaust pressure being somewhat maintained by being cramped, more draught will be carried through the firebars.

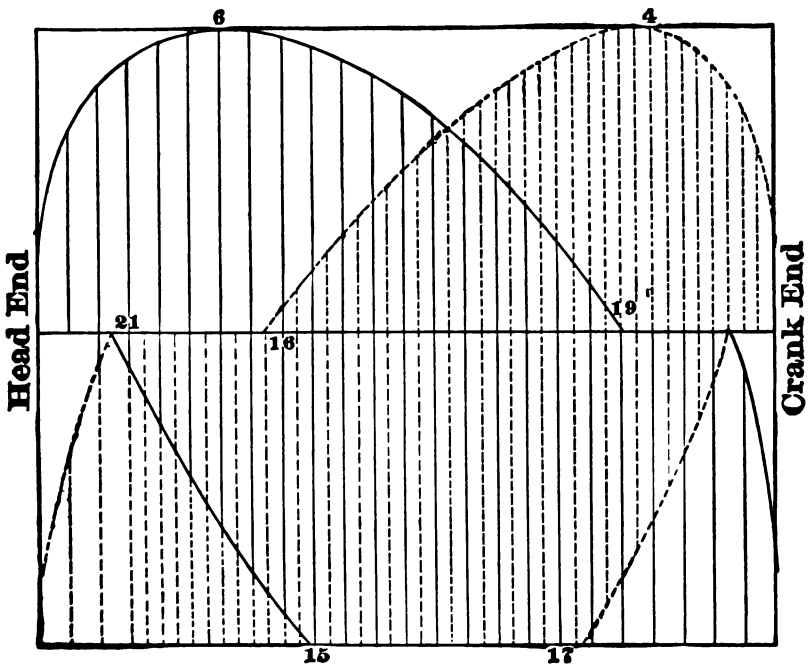

Fig. 2855.

An example of this is shown in Fig. 2854, in which it is seen that from the third to the fifteenth inch of the exhaust stroke the exhaust port was contracted, which may be done by reducing the width of the cylinder exhaust port; by widening the bridges, or by increasing the valve travel.

Thus far we have investigated the action of the valve for the steam port at the head end only of the cylinder, and we may now consider its action for the port at the crank end, both with and without overtravel. Let, therefore, the proportions be:

	Inches.
Width of steam port	$1\frac{1}{4}$
Lap of valve	1
Lead of valve	$\frac{1}{4}$
Travel of valve	$4\frac{1}{2}$
Length of connecting rod	60

And a diagram for the port openings with the $4\frac{1}{2}$ inches travel is shown in Fig. 2855, the crank-end port being marked in dotted lines, and it is seen that the port at the crank end opens full in both cases earlier in the piston stroke, and closes earlier, for the expansion uses the steam more expansively, exhausts earlier, and gives less compression.

Tabulating the results, we have steam distribution with $4\frac{1}{2}$ inches travel:

	Live Steam Period.	Point of Release.	Amount of Expansion.	Amount of Compression.
Head end.....	19 in.	$22\frac{1}{2}$ in.	$3\frac{1}{2}$ in.	$1\frac{1}{2}$ in.
Crank end	$16\frac{1}{2}$ in.	$21\frac{5}{8}$ in.	$5\frac{1}{8}$ in.	$2\frac{3}{8}$ in.

Here we find that with $4\frac{1}{2}$ inches travel the head end receives steam during $2\frac{1}{2}$ inches more of the piston stroke, and holds it in the cylinder during about an inch more of the stroke, both elements making the stroke from the head end the most powerful. Moreover, on the crank-end stroke the area of the piston rod is lost to the piston area.

Turning now to Fig. 2856, showing the steam distribution with the travel increased to $5\frac{1}{4}$ inches, and we find the events more equalized, as follows:

STEAM DISTRIBUTION WITH $5\frac{1}{4}$ INCHES TRAVEL.

	Live Steam Period.	Point of Release.	Amount of Expansion.	Amount of Compression.
Head end.....	$20\frac{1}{4}$ in.	$22\frac{3}{4}$ in.	$2\frac{1}{2}$ in.	$1\frac{3}{4}$ in.
Crank end	$18\frac{3}{8}$ in.	$22\frac{1}{4}$ in.	$3\frac{7}{8}$ in.	$1\frac{1}{4}$ in.

Here it will be seen that the live steam period is increased for both strokes at the expense of the expansion, and that the points of cut-off and release are more nearly uniform for the two strokes.

The increased steam supply to the head-end port will, however, always exist, on account of what is termed the angularity of the connecting rod, and the shorter that rod is in proportion to the length of the piston stroke the greater that irregularity will be.

The length of connecting rod usually employed where the circumstances will permit is three times the length of the piston stroke.

The reason for this irregularity in the points of cut-off may be shown and explained as follows:

In Fig. 2857 is represented in outline a cylinder, piston, connecting-rod, and crank. The piston is shown in three different positions, *a*, *b*, and *c*; when the piston is at *a*, the crankpin will be at A; when the piston is at half stroke *b*, the crank will be at B, having travelled more than past its mid position to the amount G′ B, and as it is the momentum of the power stored up in the flywheel or the load of the engine, as the case may be, that regulates the speed, therefore it is the piston speed that is variable. Suppose, for example, that the engine made a revolution in a

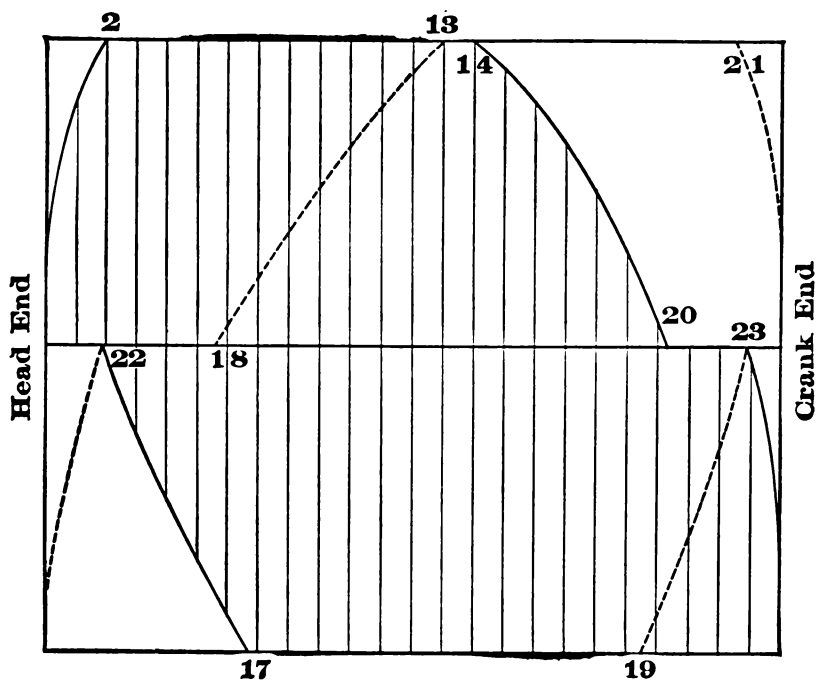

Fig. 2856.

minute, and each quarter revolution will be made in fifteen seconds; starting, therefore, from A, the crank will in fifteen seconds have arrived at G′, and the piston in the position denoted by the dotted line *d*, which is less than half its stroke; during the next fifteen seconds the crank will move the quarter revolution from G′ to C, and the piston from *d* to *c*, or more than half its stroke. Similarly, while the crank is moving its quarter revolution from C to G, the piston moves from the head end *c* to the dotted line *d*, which is more than half its stroke, and this is why the diagrams of the port openings show a greater port opening and a later point of cut-off and release for the head end than for the crank end of the cylinder. Indicator diagrams, it may be observed, show exactly the same thing.

It follows from this that the best position for the piston to be in

when the engine is to be started is with the piston nearer the head end than the crank end of the cylinder; and also, that if the steam ports are of equal widths, and each port has an equal amount of lead, the beat of the exhaust steam must be irregular in force, because there is more steam to be exhausted in the same time from the head-end than the crank-end port.

The points of cut-off may, however, be made equal for the two piston strokes by making the port at the crank end wider than that at the head end.

In Fig. 2858, for example, we have the ports drawn one-eighth full size, the outer circle D representing the path of the crankpin, and the circle *n* the path of the centre of the eccentric, its diameter representing the travel of the valve. The smallest circle *d* has a radius equal to the amount of steam lap which is to be equal for both ports.

The connecting rod has the usual length of three times the length of the piston stroke, the proportion being as follows:

	Inches.
Width of steam port	$1\frac{1}{4}$
Valve lap	$\frac{7}{8}$
Valve travel	$4\frac{1}{4}$
Piston stroke	24
Length of connecting rod	72

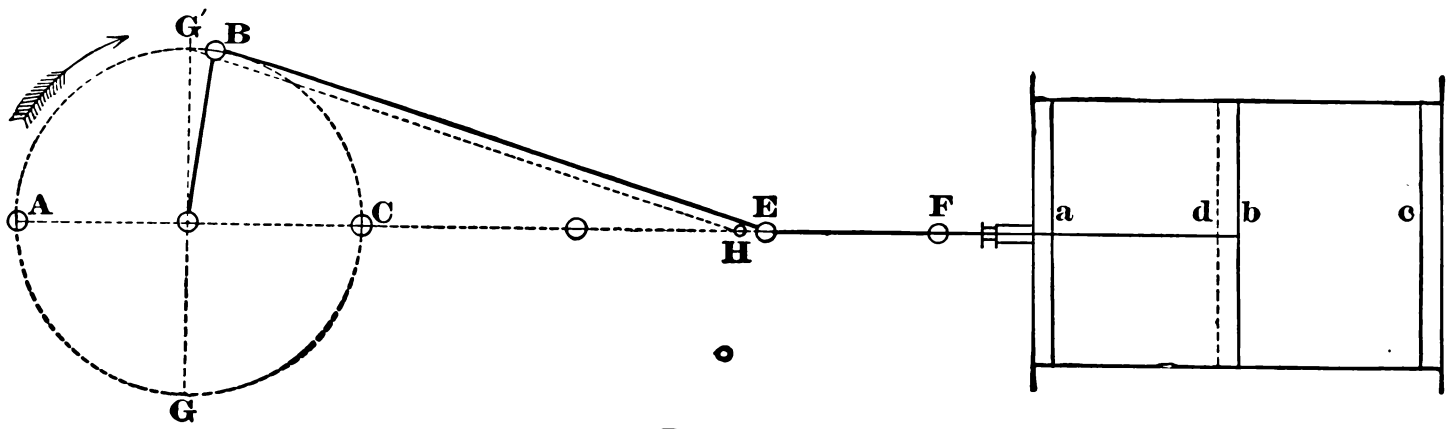

Fig. 2857.

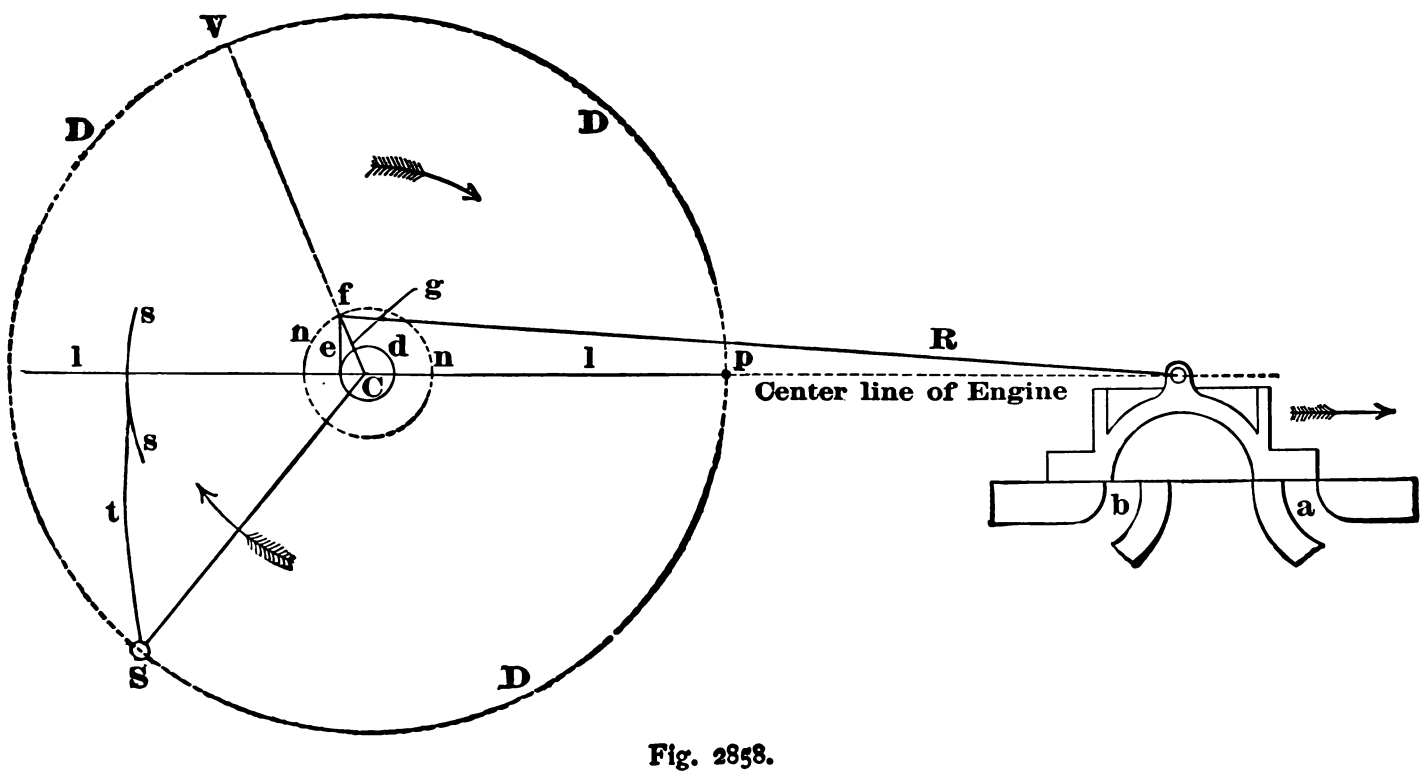

Fig. 2858.

With these dimensions the cut-off for the port *a* at the head end of the cylinder will, if the two ports are of equal width, occur at the 20th inch of piston motion, while that for the port at the crank end will occur at the 19th inch. Let it be desired that the cut-off is to occur for both strokes at the 20th inch of piston motion, and we proceed as follows, supposing the engine to run in the direction of the arrows:

* From the lap circle *d*, Fig. 2858, draw a vertical line *e* cutting the circle *n* at *f*, and a line *g* drawn from the crankshaft centre C to the point *f* will represent the throw line of the eccentric; when the valve has just cut off the steam at the head-end port *a*. We may now draw in the whole valve and a line R representing the eccentric rod. We may now find the positions for the piston and crankpin as follows:

As the circumference of circle D represents the path of the centre of the crankpin, therefore the diameter of D represents the length of the piston stroke, in this case 24; and as the point of cut-off is to be at the 20th inch, or, in other words, at $\frac{5}{6}$ of the stroke, we mark from a point *p* on crankpin circle D an arc S S, distant from *p* to an amount equal to $\frac{5}{6}$ of the line *l l*, which represents the piston stroke; and where this arc cuts line *l l* is the position the piston will be in when the valve is in the position shown in the engraving, and the cut-off occurs.

To find the corresponding crankpin position we set a pair of compasses to one-eighth of the length of the connecting rod, and from a point on the centre line of the engine draw from the arc S S the arc *t*, giving at S the required crankpin position.

We have thus far found the position of the parts when cut-off at the head end occurs, and we may now find out how much wider the port at the crank end must be to cause the cut-off to also occur at the 20th inch of piston motion, which we may do as follows:

In Fig. 2859, circle D represents as before the path of the centre of the crankpin, circle *n* the path of the centre of the eccentric and its diameter; therefore, the travel of the valve; and the smallest circle represents in its radius the amount of steam lap.

The arc *r r* represents at the point where it cuts the line *l l* of piston motion the position the piston will be in when the cut-off occurs for the port under consideration; the distance of arc *r r* from the point *q* on the crankpin circle being the same as the distance *p s* in Fig. 2858.

From the lap circle we draw a perpendicular line *u* (corres-

* From "Modern Steam Engines."

ponding to line *e* in Fig. 2858) and a line from the intersection of *u* with circle *n* to the centre, C will represent the position of the throw line of the eccentric at the time the cut-off would occur if both ports were of the same width.

By prolonging the eccentric throw line to *v* we are enabled to find the crank position by taking the radius S V (Fig. 2858) and marking from *v* in Fig. 2859 an arc *m*. A line drawn from the point of intersection of *m* with the outer circle to the centre represents the throw line of the crank. We have thus found the positions of the crank and of the eccentric when the cut-off will occur, the ports being of equal width; and we may now find the positions they ought to be in, in order to equalize the points of cut-off. To do this, we draw from the arc *r*, and with the length of the connecting rod as a radius (this length being represented by three times the diameter of the outer circle), the arc *w*, giving us at H the position the crank ought to have arrived at when the cut-off occurred; and we find that, as the cut-off occurred when the crank was at *h* and the eccentric at *v*, it occurred too early in the stroke, because the crank ought to have arrived at H. Now suppose it to have reached position H, and we may find the corresponding eccentric position by taking the radius *h v*, and marking from H an arc *x*, giving us the required eccentric position at *x*.

To find the difference in the positions of the valve when the eccentric is in the positions denoted by *v* and *x*, respectively, we draw from the point of intersection of line *x* with the circle *n* a vertical line *y*, to the line *ll*. The line *u* already described is vertical from the intersection of line *v*, and the distance measured on the line of centres *l l* between these two vertical lines is the amount the valve will have travelled past the steam edge of the port.

Now, suppose we cut out the port *a* to the dotted line *f* (the distance between *u* and *y*), then the crank will be at H, the eccentric at *x*, and the cut-off just effected, the piston being at *r*, and the points of cut-off equalized.

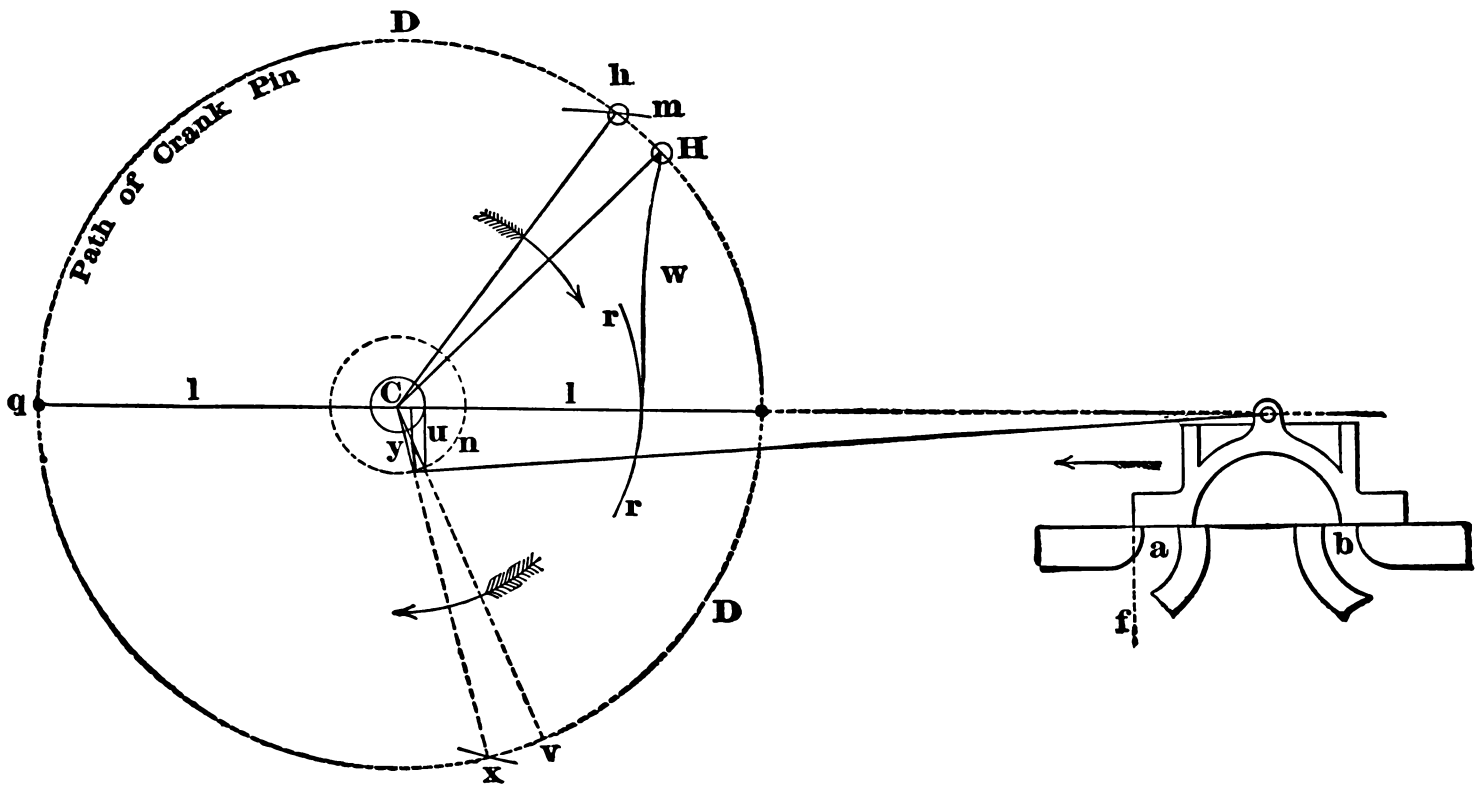

Fig. 2859.

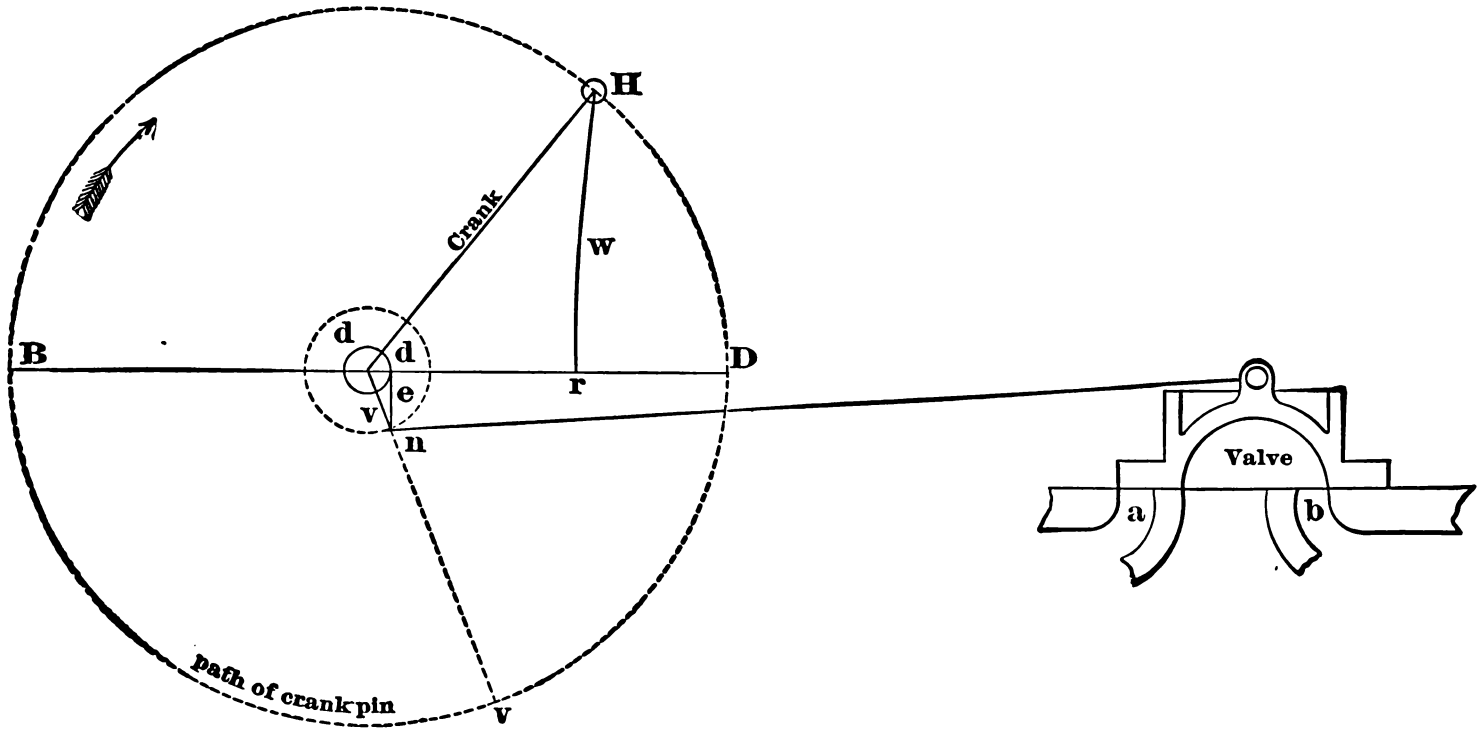

Fig. 2860.

Let it be supposed that it is determined to equalize the points of cut-off by altering the width of port *b*, or, in other words, on the stroke, when the piston is moving from the head end D to the crank end B of the cylinder, then it is necessary to proceed as follows:

In Fig. 2860, point *r* is located to represent the nineteenth inch of piston motion from B, and an arc *w* gives at H the crank position

at the time the cut-off occurs. A vertical line *e*, touching the lap circle *d*, gives at its intersection with the eccentric path *n* the throw line *v* of the eccentric, which is prolonged to V in order to get on the outer circle the position the eccentric will be in when the crank is at H.

Having found the positions of the crank and eccentric at the time of cut-off, we may draw in the valve, the cut-off at port *a* being just effected. For the other stroke we proceed as in Fig. 2861, in which the circles correspond to those in Fig. 2860, the arc S being the same distance from D that *r* is from B in Fig. 2860, and therefore representing the piston position for equalized points of cut-off.

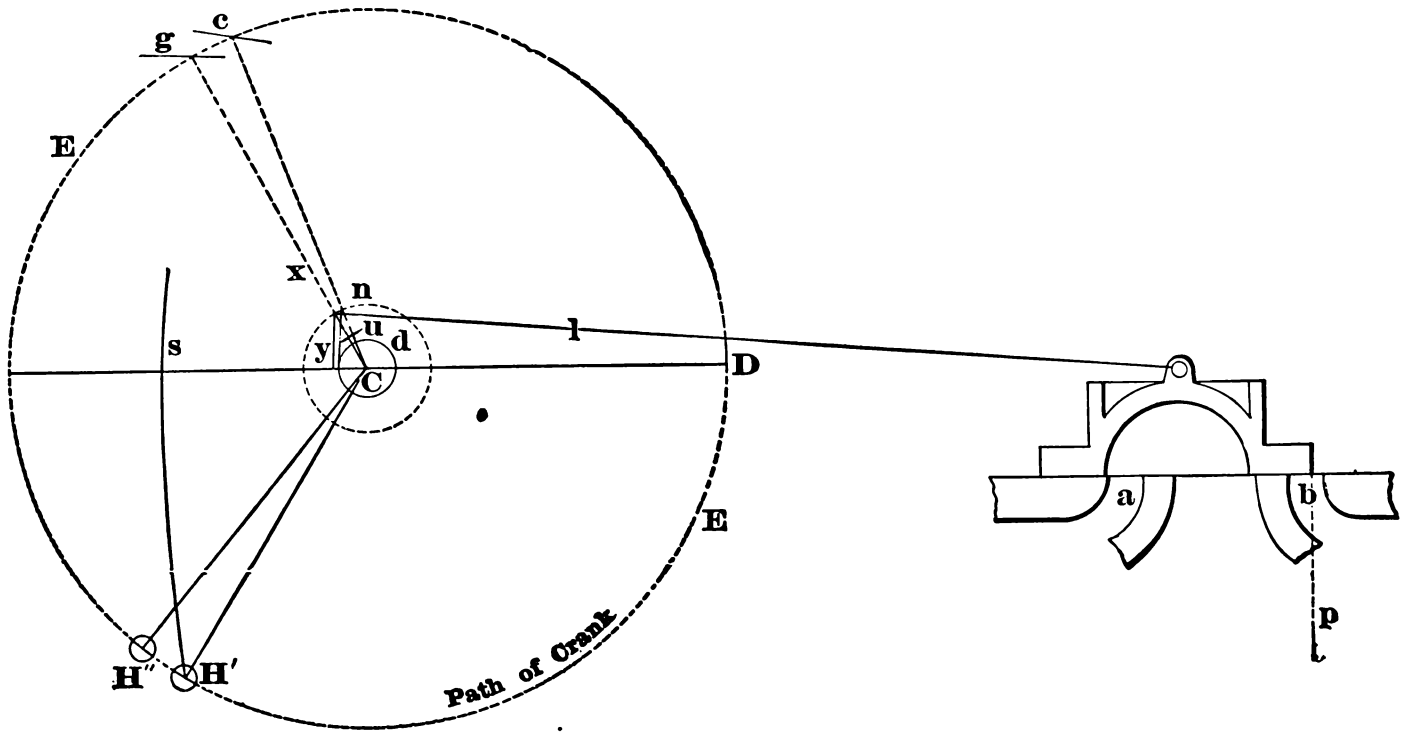

Fig. 2861.

With a radius equal to three times the diameter of the outer circle E, and from a point on the line of centres *l l*, we mark from *s* an arc giving us at H' the crank position at the time of equalized cut-off.

To find the corresponding eccentric position, we take the angle the eccentric stands at to the crank, or radius H *v*, Fig. 2860, and mark from H', Fig. 2861, an arc *g*, and from where *g* cuts the outer circle draw a line *x*, giving us the eccentric position corresponding to the crank, position H'.

Drawing a vertical line *u* from the lap circle, and a line C *c* passing through the intersection of *u* and circle *n*, we find that the cut-off will not occur until the eccentric has reached *c*; too late to give an equalized cut-off, because when the eccentric has arrived at *c*, the crank will be at H'' instead of at H', because radius H' *g* equals radius H'' *c*.

In the figure, the valve is drawn in the position it would occupy when the crank was in its proper position H', the port *v* being still open, and it becomes clear that, in order to equalize the point of cut-off, we may make the port *b* narrower, bringing its steam edge up to the dotted line *p*.

The amount to which we must decrease its width may be found by dropping a perpendicular line *y* from the point of intersection of line *x* with circle *n*, and measuring the distance between lines *u* and *y*. It is obvious that it is preferable to draw the outer circle to a diameter equal to the full travel of the valve, and let it represent the crank path on a reduced scale, as the lines will be clearer, and correctness may more easily be obtained.

Equalizing the points of cut-off, by thus making the ports of different widths, possesses the advantage that laps of the valve are maintained equal, and the valve may be put on end for end without being put on wrong, which might occur if the laps, instead of the ports, were made of unequal widths.

VALVE LEAD.—The points of cut-off or of release may be equalized for the two strokes by giving more lead at the crank-end than at the head-end port. It is generally, however, considered of more importance to give equal lead for the two ports, unless other considerations than equalizing the points of cut-off are concerned.

In inverted cylinder engines, for example, in which the crankshaft is beneath the cylinder, more lead is given to the crank end than to the head-end port, so as to counteract the weight of the piston, the crosshead, and the connecting rod, when descending on the head-end stroke; a further consideration being that the wear of the crankshaft bearings diminishes the lead at the crank end.

Independently, however, of this question of weight and wear, it can be shown that so far as quietness of running is concerned, more lead is required at the crank end than at the head end (a matter that is of more importance in proportion as the piston speed is greater); because the piston approaches its point of reversal at a greater velocity, and therefore requires more cushioning at the crank end.

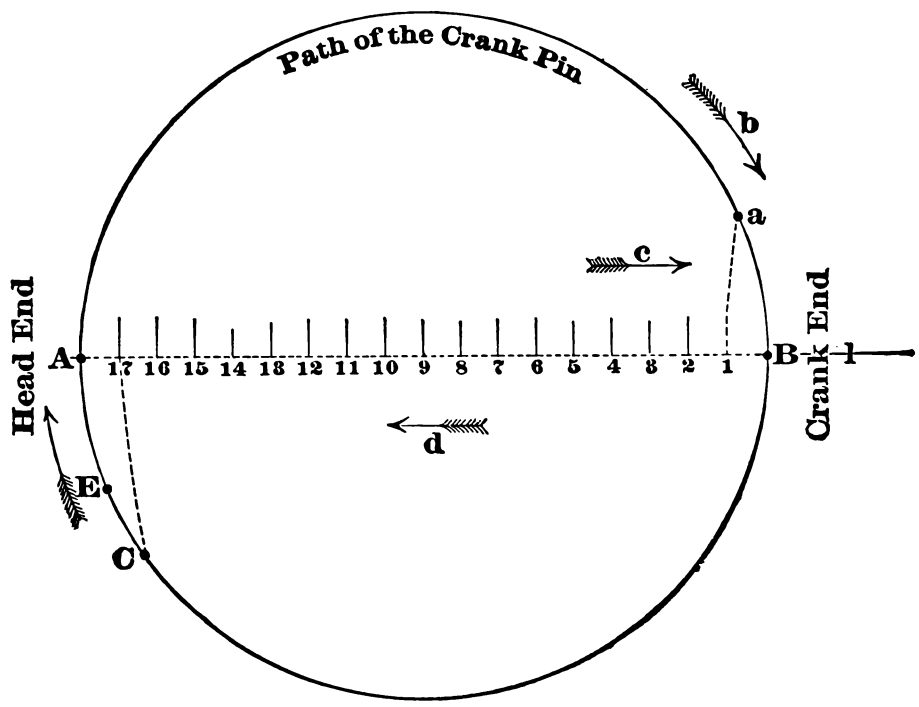

Fig. 2862.

Thus, in Fig. 2862, let the circle represent the path of the crank journal or crankpin revolving in the direction of the arrow *b*. Let the divisions 1, 2, 3, etc., represent inches of piston motion. With the compasses set to represent the length of the connecting rod, and set on the line of centres, we mark from division 1 an arc giving at *a* the correct position of the crankpin when the piston

is at 1, and has an inch to travel in the direction of *c* ere it reaches the end of its stroke at the crank end B. After reversing its motion, the piston travelling in the direction of arrow *d* arrives at the 17th inch of its stroke (having an inch to travel to complete its stroke at A), the crankpin being at C, which is located as before, with the compasses set to represent the length of the connecting rod and the arc from 17 to C. It has already been explained that the flywheel, or, if there is no flywheel, as in the case of the locomotive and marine engine, the load acts to give uniformity of revolution to the crank journal or pin; hence in a given time the crankpin will move through a given part of its revolution, or, in other words, the speed of revolution of the centre of the crankpin will be (unless disturbed by greater variations in

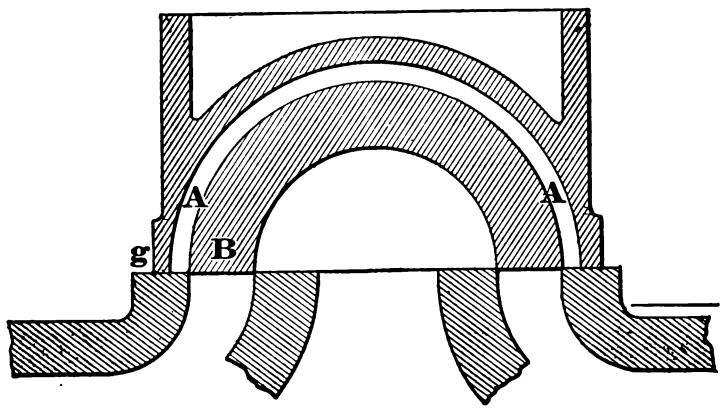

Fig. 2863.

the amount of the engine load than can be offset by the action of the engine governor) equal at all parts of its path of revolution.

When the crankpin is at C, the piston has an inch to travel to reach the dead centre A, and the crankpin has to travel from C to A in the same time as the piston travels from 17 to *a*, and it follows that the piston will travel slower in coming to rest at the head end than at the crank end, the difference being represented by the distance from C to E, the arc E A being equal to the arc A B, and therefore representing the same amount of time in the crankpin revolution. As, therefore, the piston approaches its dead centre at a greater speed at the crank end, that end may have more lead, in order to let the piston come to rest as quietly as it does at the crank end, which cannot be done by any method of counter-

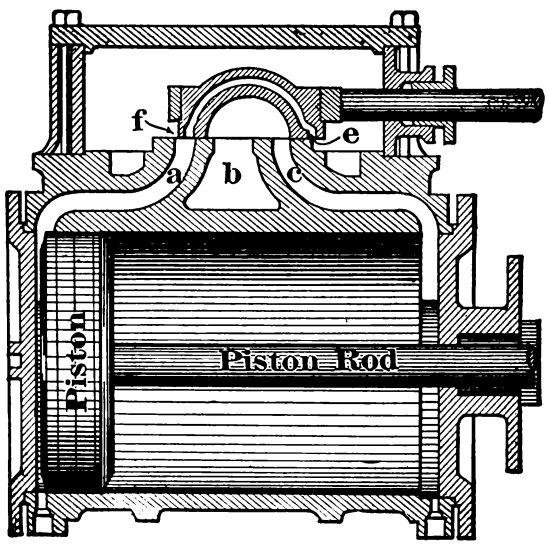

Fig. 2864.

balancing, because counterbalancing cannot be made to affect the natural speed of the piston in relation to crank speed ; all that can be done, therefore, is to counterbalance the weight of the moving parts to suit the head end of the cylinder and increase the lead at the crank end.

DOUBLE-PORTED VALVES.—To increase the supply of steam and prevent the wire drawing that has been shown to accompany the action of the ordinary slide valve, especially when closing to effect the cut-off, and when its travel is reduced to hasten the cut-off and use the steam more expansively, various methods of multi-porting the valve, and in some cases the cylinder also, are employed, examples being as follows :

Fig. 2863 represents the Allen Valve placed in mid position, A being a secondary or supplementary port. The lap is the width of the extra port A added to the thickness of metal at the valve edge *g*.

As soon as the valve opens to the lead, as in Fig. 2864, a second supply of steam enters at, and passes through, the supplementary port A, as denoted by the arrow *e*. This second supply continues, in addition to the ordinary one, so long as the secondary port A

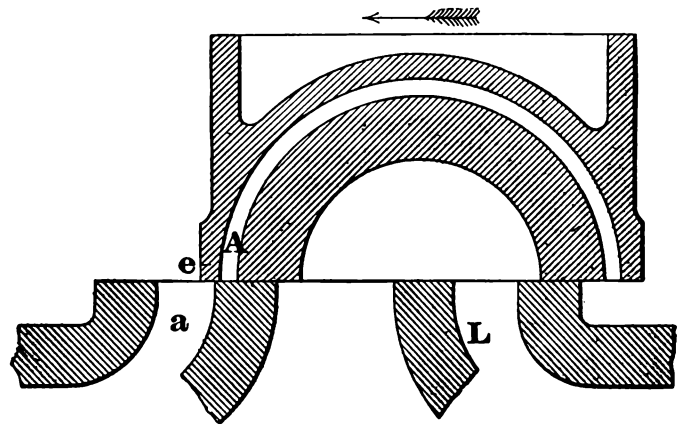

Fig. 2865.

is uncovered by the valve seat, but ceases momentarily when the valve is at the end of its travel, as in Fig. 2865 ; so soon, however, as the valve moves on its return, the supplementary, or secondary, port reopens and remains open until the valve has moved to the position shown in Fig. 2866. It will be noted that when the valve is at the end of its travel, as in Fig. 2865, the opening of port *a* is reduced to the amount of the thickness of the

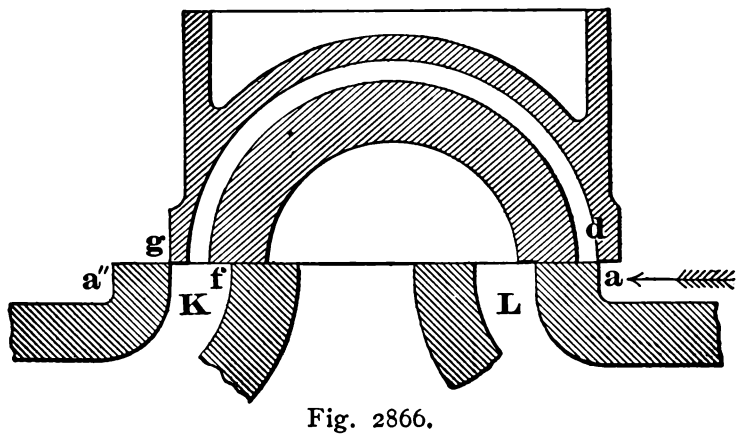

Fig. 2866.

metal at *e*, a circumstance that is taken into consideration in determining the width of the steam port.

The exhaust is effected in the same manner as in a simple slide valve, and independently of the supplemental port, as may be seen from the figure.

When the valve is about to open for the lead, the steps at the other end of the valve seat must come exactly fair with the outer

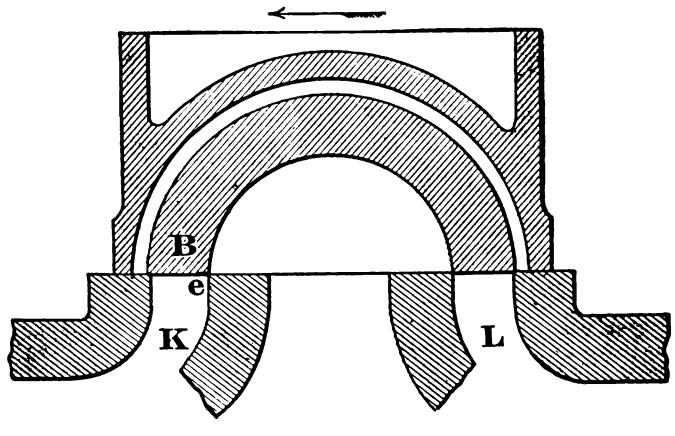

Fig. 2867.

edge of the supplemental port. Thus, in Fig. 2866, the edge of step *a* is exactly fair with edge *d* of the supplemental port, so that when the valve moves to open the port, the steam will be admitted simultaneously through the supplementary port and through the port opening left by the edge *g*.

The width of B, Fig. 2867, must be sufficient to cover the steam port and keep it steam tight when the valve is in mid position, as

in Fig. 2866, and for this purpose $\frac{1}{32}$ of an inch on each side of the port will suffice, making B $\frac{1}{16}$ of an inch wider than the steam port.

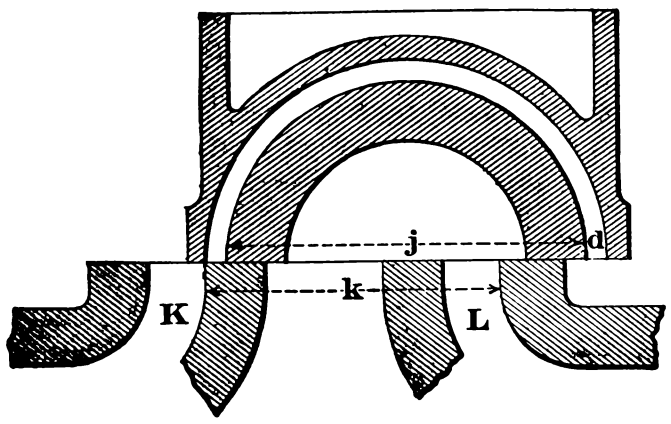

Fig. 2868.

The inner edge or dimension *j*, Fig. 2868, of the supplemental steam port must be $\frac{1}{32}$ of an inch wider than the extreme width

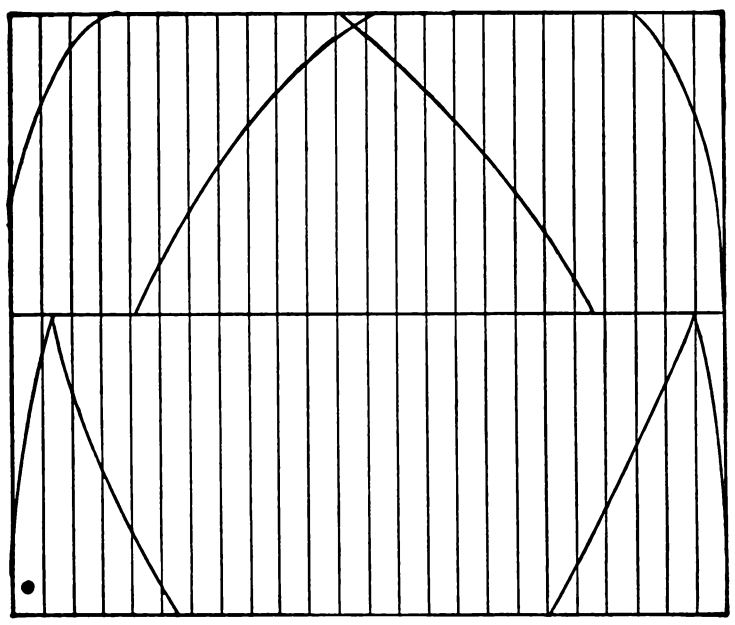

Fig. 2869.

dimension *k* of the outer edges of the cylinder steam ports, so as to isolate the ports when the valve is in mid position.

We now come to the width of the supplementary port, and it is

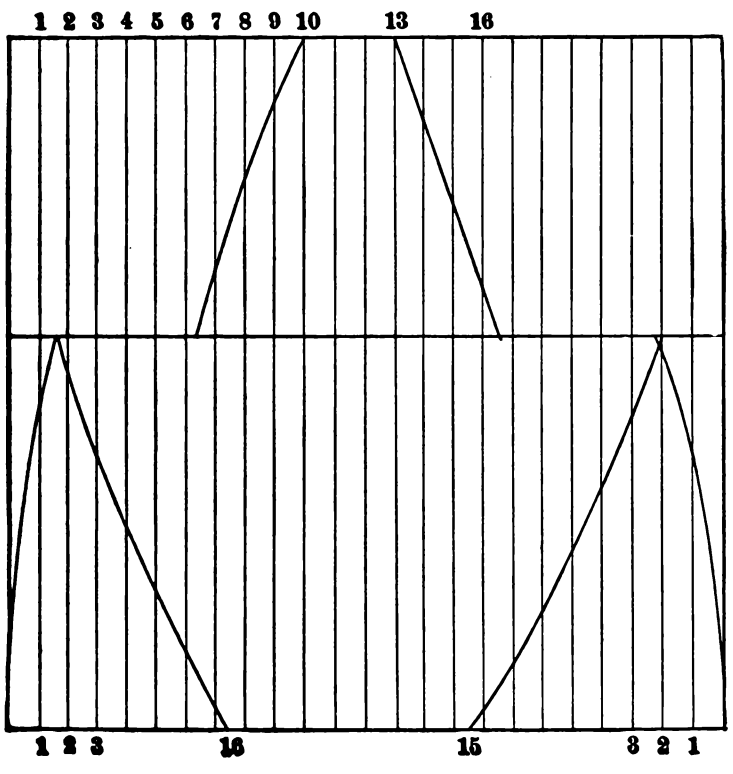

Fig. 2870.

obvious that the thickness of the valve at *e*, Fig. 2868, must be enough to leave sufficient strength; and since this thickness covers the port, as seen in the figure, it is desirable to leave it no more than its strength requires, thus leaving the supplementary port as wide as possible.

By the employment of the supplementary port the steam port is opened quicker, remains full open longer, and closes quicker.

We have here considered the working of the Allen valve for late points of cut-off only, and its action may be seen by referring to Figs. 2869 and 2870, the former showing the port openings

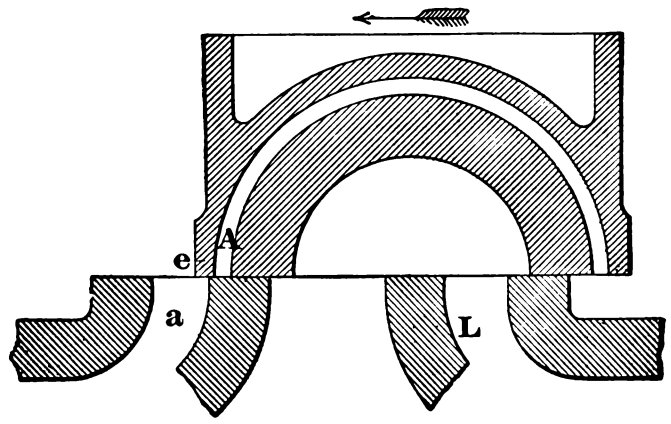

Fig. 2871.

of a common slide valve, and the latter of the Allen valve. Both valves have $1\frac{3}{8}$ inches steam lap and $5\frac{1}{4}$ inches travel. The width of port for the common valve is $1\frac{1}{4}$, and that for the Allen valve $1\frac{5}{8}$, the thickness of the metal between the supplementary port A and the steam edge of the valve (as at *e*, Fig. 2871) being $\frac{3}{8}$ of an inch, leaving the effective steam port opening $1\frac{1}{4}$ inches; as an exhaust port, however, there is a full opening of $1\frac{5}{8}$ inches.

If we give to the valve sufficient travel to close the supplement-

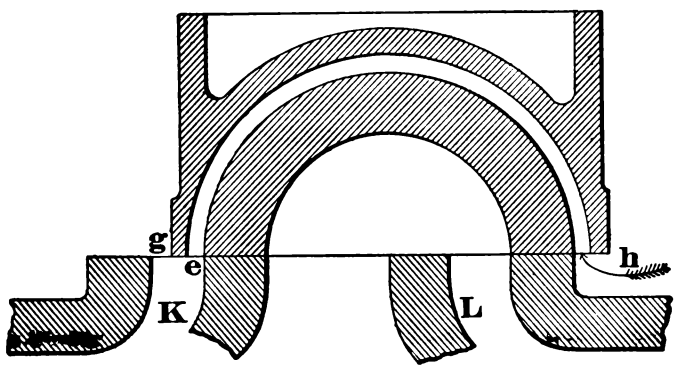

Fig. 2872.

ary port, as shown in Fig. 2865, we may give it as much steam lap as the common slide valve and get a much better distribution of steam, as has been shown; but we may give to the valve only sufficient travel to cause it, at the end of its stroke, to come to the position shown in Fig. 2872, the opening at *g* being equal to the width of the supplementary port, and thus enable the valve to cut off at early points in the stroke without the employment of excessive steam lap and valve travel, while obtaining a better steam

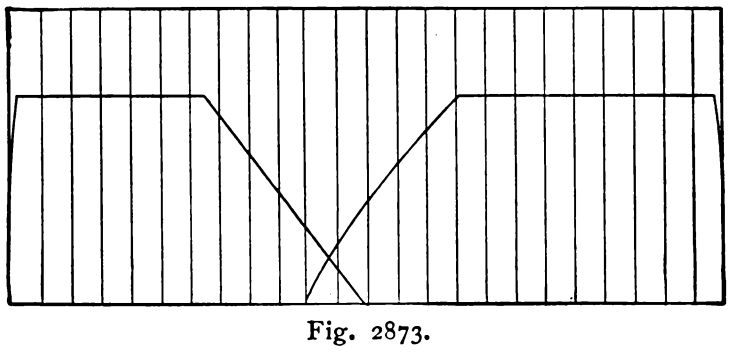

Fig. 2873.

supply than with the common valve and avoiding the irregularities in the points of cut-off, of release, and of compression that arise when the amount of steam lap is excessive, as equal to, or one and one-quarter times the width of, the steam port.

The advantage of the Allen valve is greater in proportion as its travel is reduced to effect an early cut-off, the port openings for a travel sufficiently reduced by a link motion to cut off at half stroke being shown in Fig. 2873, and those for a cut-off at one

quarter stroke in Fig. 2874, which compare very favorably with Figs. 2875 and 2876, representing the action of the ordinary valve for corresponding points of cut-off obtained by reducing the valve travel.

Other methods of increasing the steam supply are as follows:

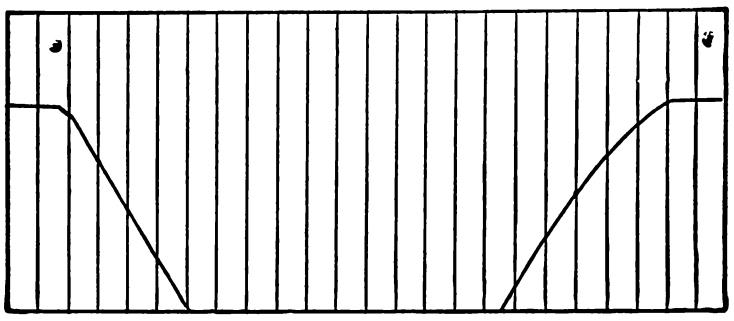

Fig. 2874.

Fig. 2877, represents an example of a double-ported valve for a marine engine. The outer ports *a d* admit the steam at the ends of the valve in the usual manner, but the inner ones *b c* receive steam through passages *e f* provided in the valve for that purpose.

Piston valves may be double-ported by the construction shown

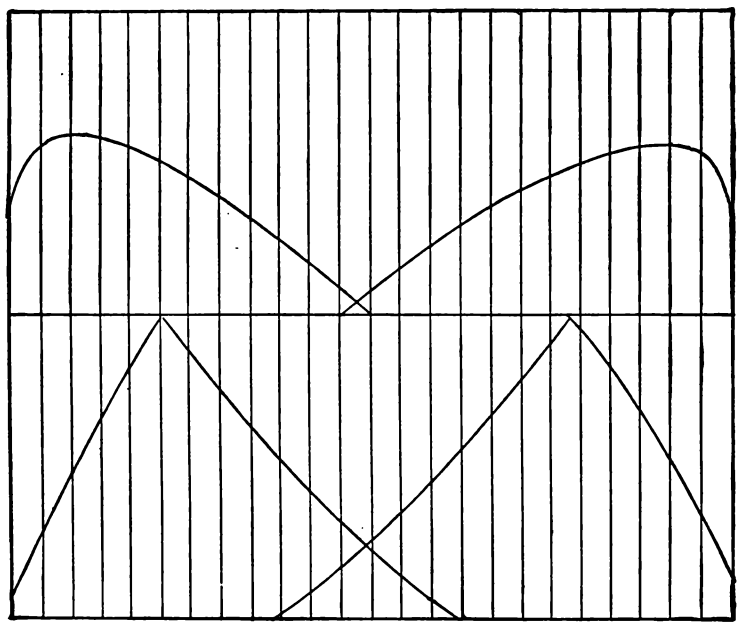

Fig. 2875.

in Fig. 2878, which represents the valve in the Armington Sims engine. The valve is hollow, save at the ends.

Referring to the cylinder port *a*, the steam is admitted around the circumference of the valve, as denoted by the arrows *e e*. A

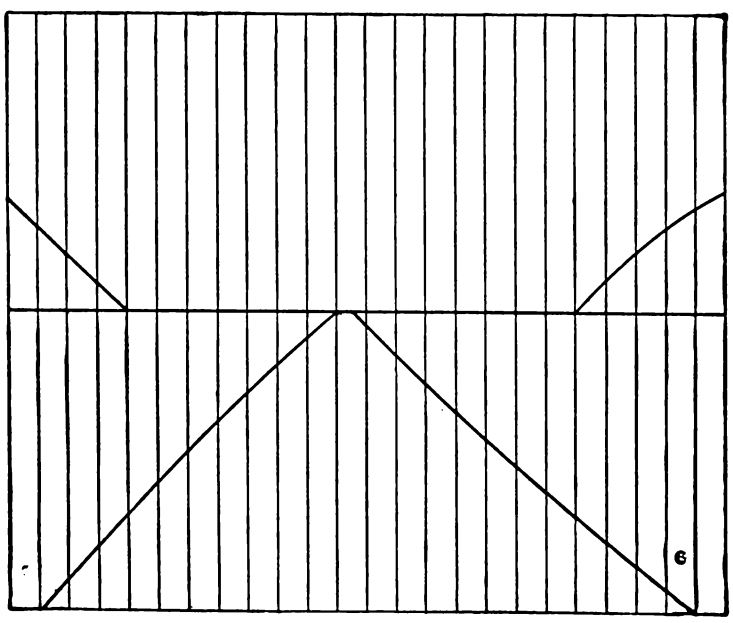

Fig. 2876.

second supply, however, is admitted through the openings *d'*, as denoted by the arrows *f f*, passing through the hollow stem of the valve, and entering port *a* through the opening at *d*. The exhaust is at the ends, as denoted by the arrow at B.

In some constructions a double supply of steam is obtained from a valve having but one port, an example being given in Fig. 2879, which is that employed in the *Straight Line* engine, designed by Professor John E. Sweet, of Syracuse, New York.

The form of the valve is shown in Fig. 2879. It is simply a

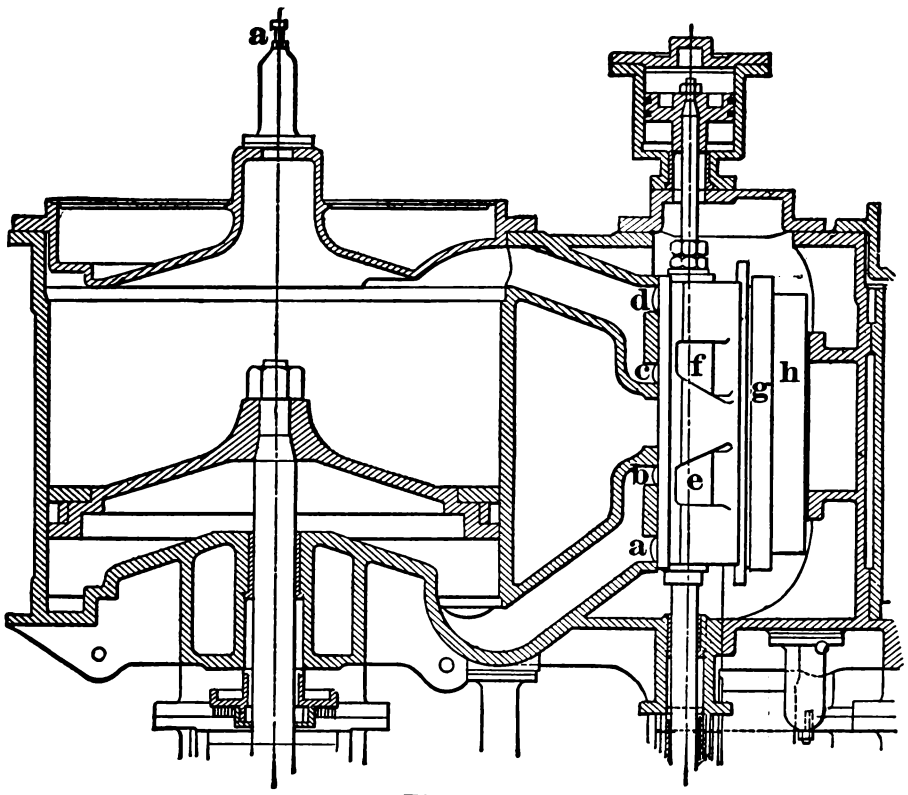

Fig. 2877.

rectangular frame having four ports (*p* in the figure); the ribs, between the ports, being supported by *e*, which are solid with the valve, but do not extend to its faces.

The valve slides between a cover plate P, Fig. 2880, and the cylinder face.

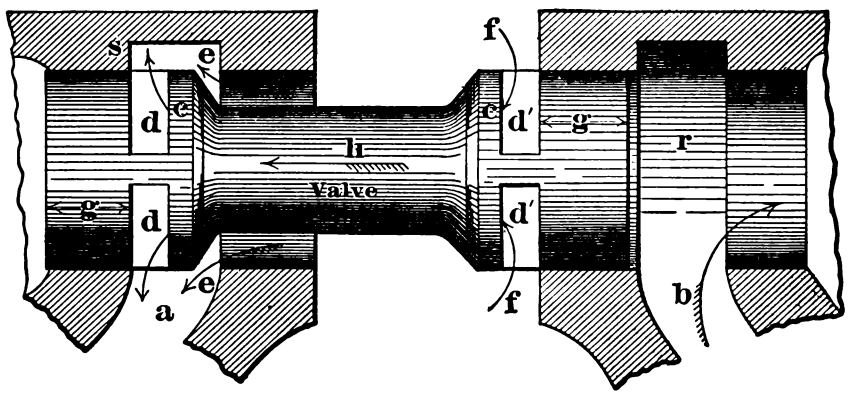

Fig. 2878.

In Fig. 2881, one end of the valve only is shown, the port *a* being open to the amount of the lead, the steam passing into port *a* in two streams, as denoted by the arrows *e f*.

The effective port opening remains at double that due to the

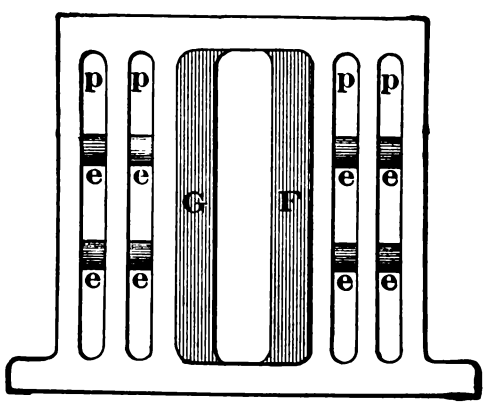

Fig. 2879.

amount of valve motion until the valve reaches the position shown in Fig. 2881, after which the amount of port opening remains a constant quality until the valve has reached the position shown in Fig. 2882, after which the opening increases the

same as for a common slide valve, the maximum of valve travel being shown in Fig. 2883.

When the point of cut-off is at half stroke, the valve opens the port p' in the figures this also is double that due to the motion of the valve, as may be seen in Fig. 2884, in which the valve is shown in the position occupied shortly after exhaust begins, the

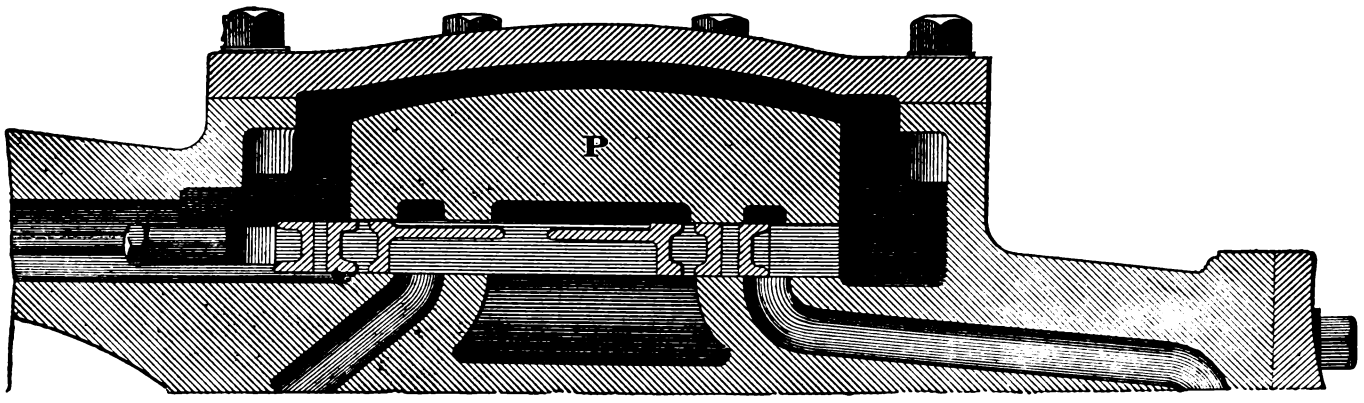

Fig. 2880.

port for admission to the amount shown in Fig. 2881, the opening at f and at p being equal. It is seen, therefore, that by means of port p, the port opening is, for all points of cut-off up to half

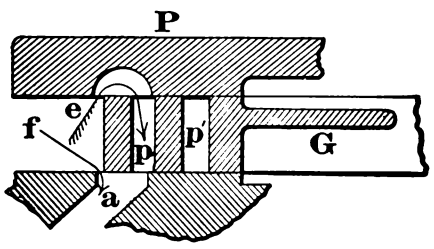

Fig. 2881.

stroke, doubled throughout that part of the admission period and that for points of cut-off later than half stroke the admission of steam to port A remains stationary for a certain period,

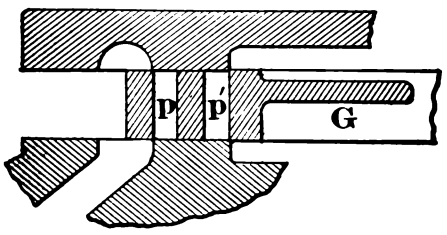

Fig. 2882.

depending on the point of cut-off; and for still later points the port opening increases the same as in case of a common slide valve.

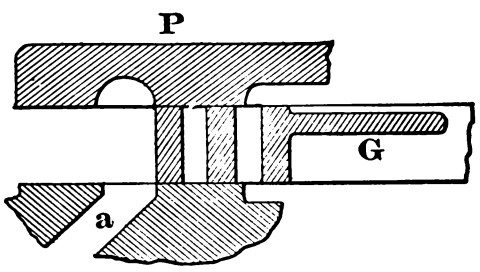

Fig. 2883.

The action is similar when the valve moves on its return stroke to effect the cut-off, the amount of port opening being doubled from the position shown in

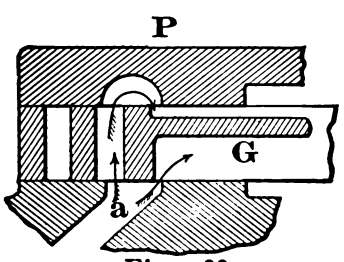

Fig. 2884.

Fig. 2884, until final cut-off, which prevents wire drawing the steam.

We have now to consider the exhaust, and by means of the steam having two means of exit, as denoted by the arrows. The double port opening continues during the same part of the piston motion as the extra port opening does for the admission, because the port p' has the same effect upon the exhaust as port p has for the admission. The shields G in the figures are provided because it was found that in their absence the exhaust steam flowing in

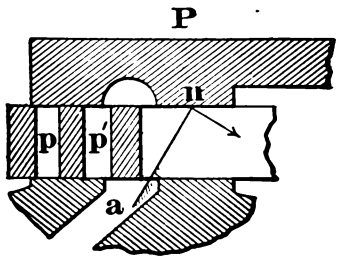

Fig. 2885.

the direction denoted by the arrow in Fig. 2885 would, in time, cut away the face of the pressure-relieving plate P at n.

A design of double-ported balanced valve, designed by the Weston Engine Co., is shown in section in Fig. 2886, the valve removed from the steam chest being illustrated in Fig. 2887. Steam is admitted in the middle of the valve at a, through what

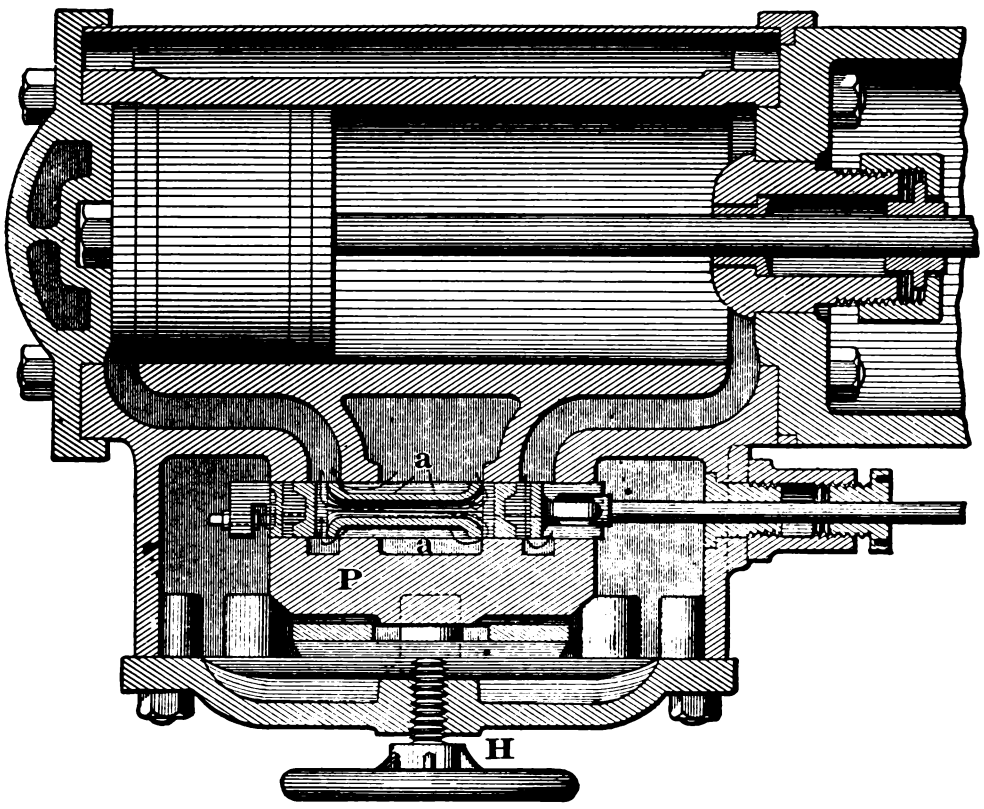

Fig. 2886.

in an ordinary valve would be the exhaust port, the admission occurring through three openings, as denoted by the arrows, one of these passing through a longitudinal passage in the middle of the valve. The exhaust occurs through two separate openings. By this construction the live steam surrounds the middle of the valve, which is not, therefore, pressed against either the valve seat

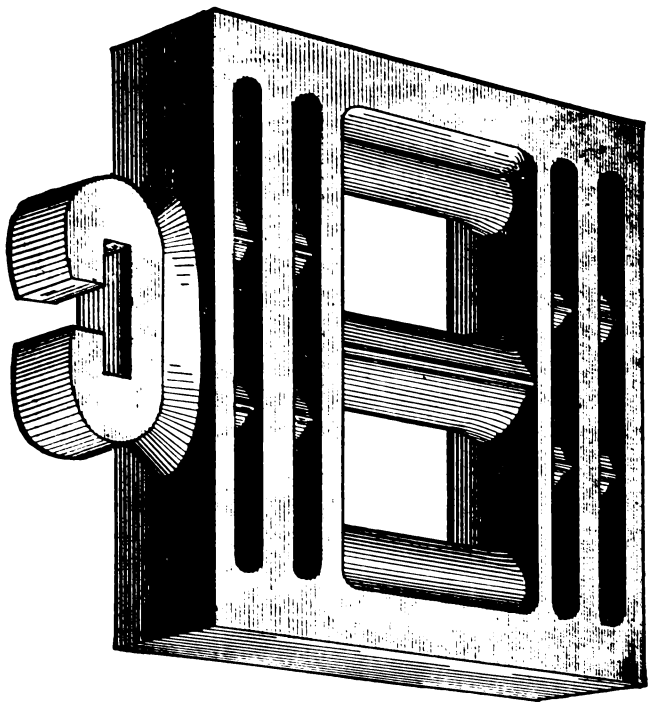

Fig. 2887.

nor the back plate, the latter being adjustable for fit to the valve by the screw and handwheel shown at H.

relieved by means of rollers *r r r* in the figures, which are provided with small axles *x x x*, having bearing in a frame *t*, thus providing rolling carriages (one on each side of the valve) on which the valve is moved in the usual manner.

The diameters of the rollers are made such when new that the face of the valve is raised about $\frac{1}{1000}$ inch clear of the seat. To prevent wear of the steam-chest seat and valve as much as possible, steel plates *p p*, shown in Figs. 2888 and 2891, are laid on the steam-chest seat, but not fastened. Two other plates *u u* are attached to the valve, and between these plates the carriages are made to roll. The rollers are prevented from touching each other by the small axles *x*, and around these the rollers turn. The axles, with the rollers placed upon them, are riveted to the bars *t*.

A balanced valve, extensively used in locomotives, and representative of a mode of balancing sometimes employed upon the valves of marine engines, is shown in Figs. 2892, 2893, 2894, 2895, to 2897, in which four grooves (one on each side and one on each end of the valve) are provided. In these grooves strips *s s s s* of metal are accurately fitted, so that the latter may move up and down in the grooves without any perceptible play. The strips are held up by spiral springs *i*, as shown. Some make these springs of hard brass wire, while others prefer to use steel wire for the same.

The diameter of the wire used ranges from $\frac{1}{16}$ to $\frac{1}{8}$ of an inch. The number of springs generally employed is shown in the figures.

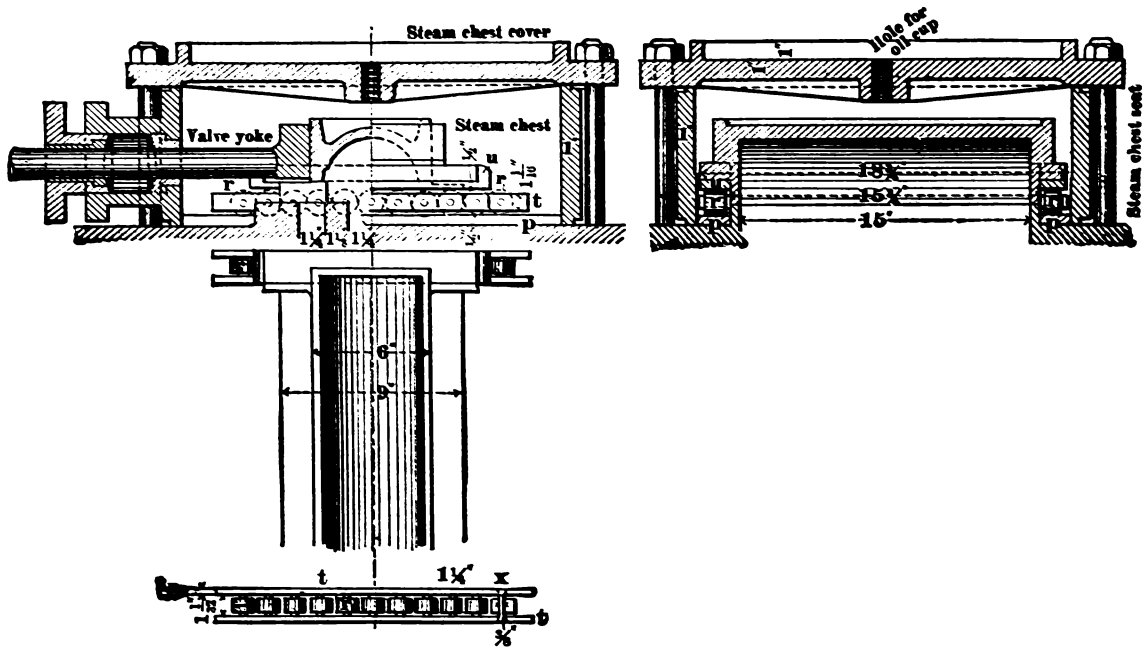

Figs. 2888–2891.

BALANCED VALVES.—Figs. 2888, 2889, 2890, and 2891 represent a slide valve whose pressure to its seat, under steam, is

When the balanced valve is to be used, the under side of the steam-chest cover must be accurately planed and scraped, because

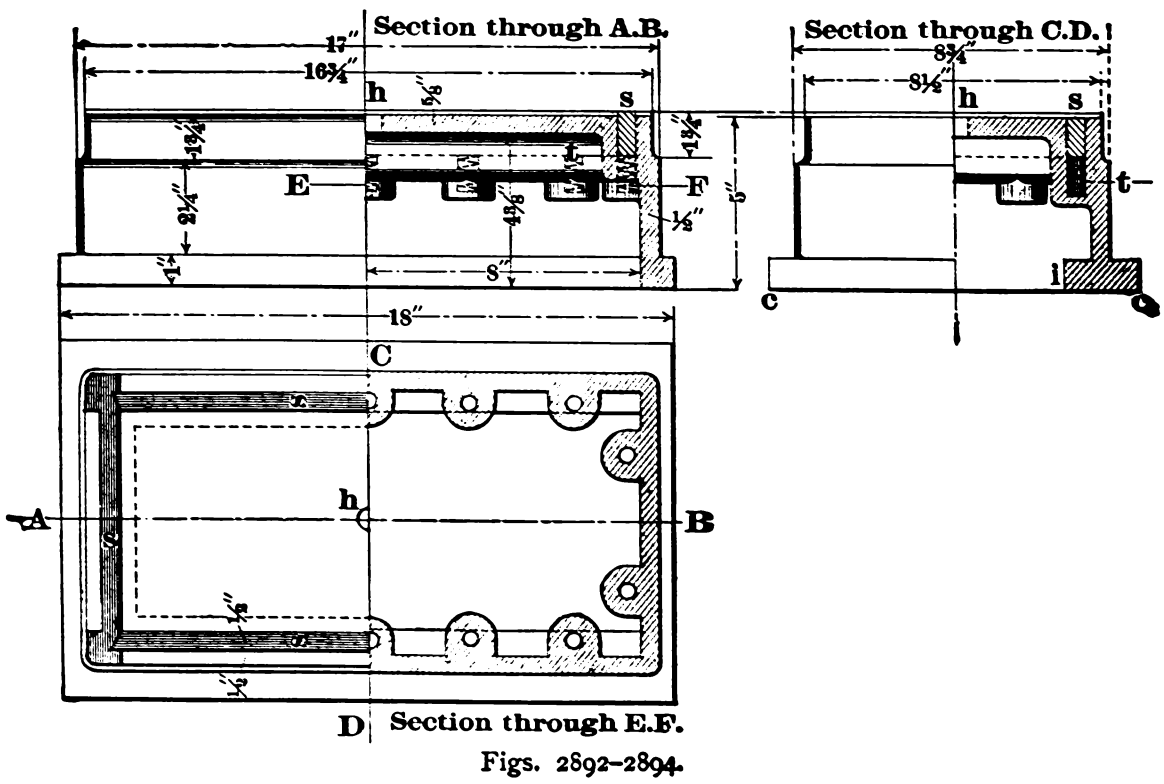

Figs. 2892–2894.

against this surface the strips must press and make a steam-tight joint when the valve is in the steam chest, as shown in Fig. 2895. This arrangement will prevent the steam from coming into contact with the greater portion of the back of the valve, thus reducing the pressure of the valve against the valve seat.

When the valve is new, and placed in the steam chest, as shown in Fig. 2895, and all ready for use, then the strips should project not more than $\frac{1}{16}$ of an inch above the top of the valve. The strips should not be less than $1\frac{3}{4}$ inches deep—2 inches is better, in fact. These should be made as deep as they can be made without choking the exhaust cavity of the valve, and $\frac{1}{2}$ inch is about the proper width of the strips. The manner of joining them at the corners is plainly shown in the plan of the valve, Fig. 2894. For the sake of distinctness, the strips have been shaded in this figure.

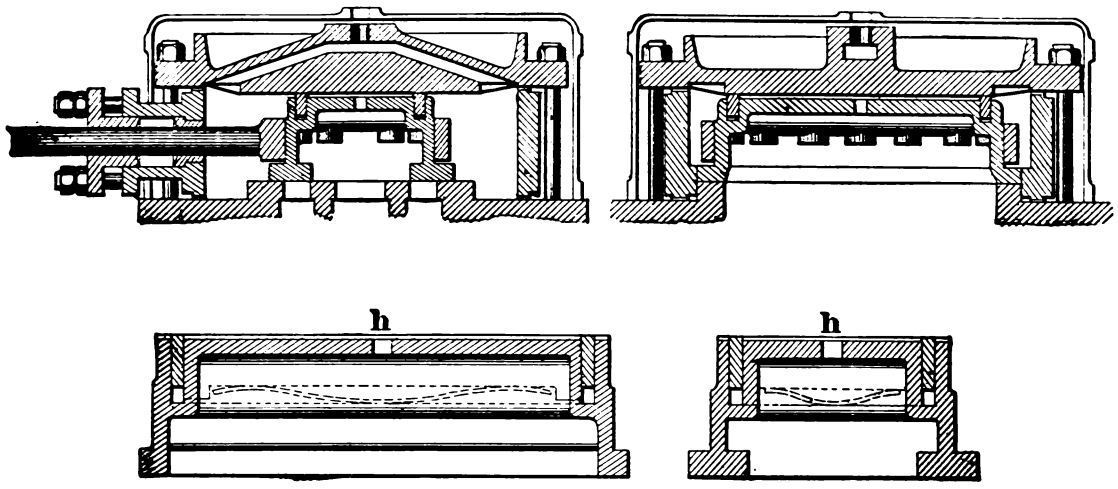

Figs. 2895–2897.

Some master mechanics object to the spiral spring, because the pockets in which these springs are placed will, in time, fill up with tallow, and thus prevent the springs from working freely. Therefore, in place of spiral springs for holding the strips, elliptic springs made of flat steel are used, as shown in Figs. 2896 and 2897; and, of course, when these springs are to be used, the grooves must be cut deep enough to receive them, and the pockets, as shown in Figs. 2892 and 2893, left out.

Yet these elliptic springs are not free from objections. Some disapprove of them because they are too strong when new, and consequently are liable to cut the steam-chest cover.

On the other hand, if these elliptic springs are made weaker, so that they will work satisfactorily in the beginning, they will not remain so long, but become too weak to hold up the strips.

All balanced valves of this kind should have a hole *h*, Fig. 2893, about $\frac{3}{4}$ of an inch in diameter, through the top of the valve; without this hole the valve will lift off its seat. When a locomotive is running and the steam shut off, a partial vacuum will be found in the steam chest, causing the valve to chatter, and thus ruin its mechanism. To prevent the forming of a vacuum in the steam chest, and consequently its evil effects, a vacuum valve must be attached to the steam chest, to admit air into the latter when steam is shut off during the time the engine is in motion. Without this vacuum valve no balanced slide valve must be expected to work successfully. Indeed, it is good practice to attach a vacuum valve to all steam chests in which a plain slide valve is working, as this will often be the means of preventing the ashes from being drawn into the cylinder and the steam chest.

SEPARATE CUT-OFF OR EXPANSION VALVES.—When the load an engine is to drive is about constant, and great uniformity of speed is not essential, an expansion or separate cut-off valve driven by a fixed eccentric, is employed. The valve may be so constructed as to cut off the steam supply at a definite and unvarying point in the piston stroke, or be adjustable by a hand-wheel to vary that point, to offset variations in the boiler pressure; and if great regularity of speed is essential, as, say, a variation of three per cent. when the engine is running unloaded and the load is put on suddenly, the cut-off or expansion valve may be oper-

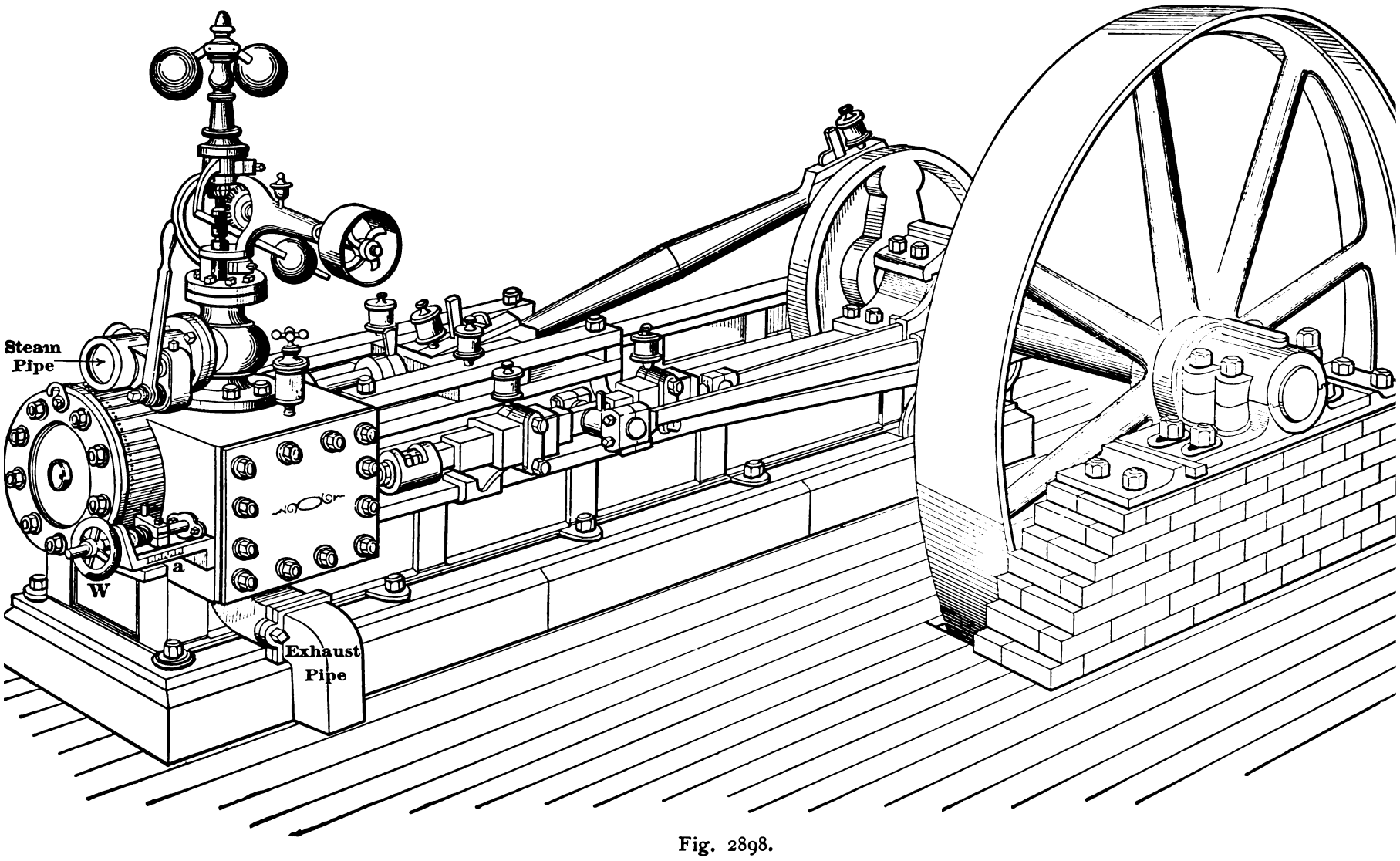

Fig. 2898.

ated by a shaft or other governor. Separate cut-off or expansion valves usually work on the back of the ordinary or main valve, and may be employed so as to equalize the points of cut-off for the two piston strokes and a quick cut-off to prevent wire drawing the steam.

Fig. 2898 represents a stationary engine having what is known as a Meyer's cut-off, in which a throttling governor is employed to equalize the effect of variation in the boiler pressure, and an adjustable cut-off valve to vary the amount of expansion, which is done by operating the wheel W, a pointer and scale at *a* denoting at what point in the piston stroke the cut-off is set.

The main valve controls the lead, the latest point of cut-off, the exhaust, and the compression, and is driven by a fixed eccentric.

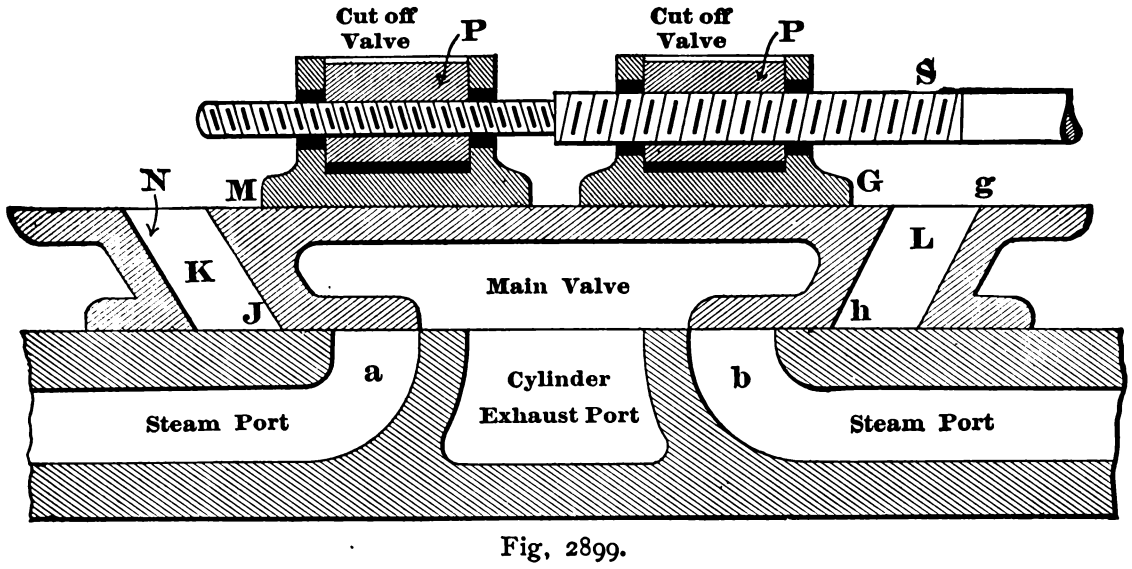

Fig. 2899.

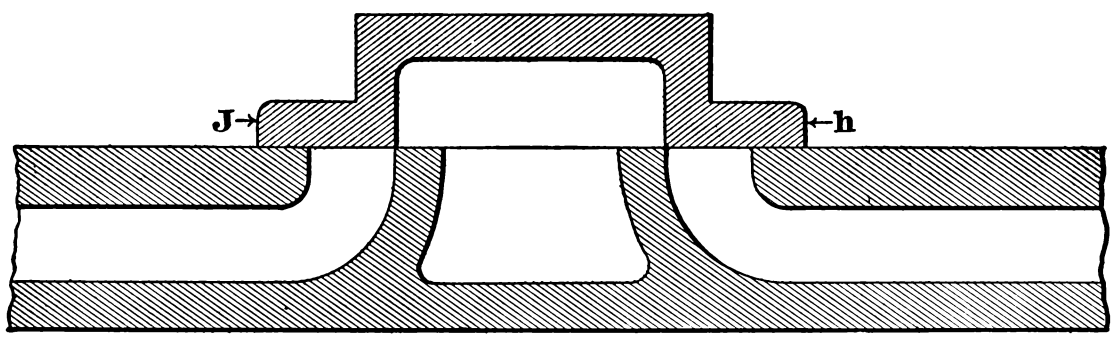

Fig. 2900.

The cut-off valve governs the point at which the expansion shall begin, and is driven by a separate fixed eccentric. The construction of the valve is shown in Fig. 2899; and beneath it, in Fig. 2900, is shown (for the purpose of clearness) a valve of the ordinary form, but the action of the two is identical. It is seen that the edge *h* of the main valve will cut off the steam the same as edge *h* of the common slide valve, and, also, that the edges J of the two valves would cut off alike if their eccentrics occupied the same positions. It is also apparent that when edge *h* of the main valve has closed the port *b*, the expansion will begin, independent of any action of the cut-off valve. The longest distance which these two events will occur, depends upon the distance that G stands from *g*, and M from N, if both the valves were at mid-travel, as shown in the figure.

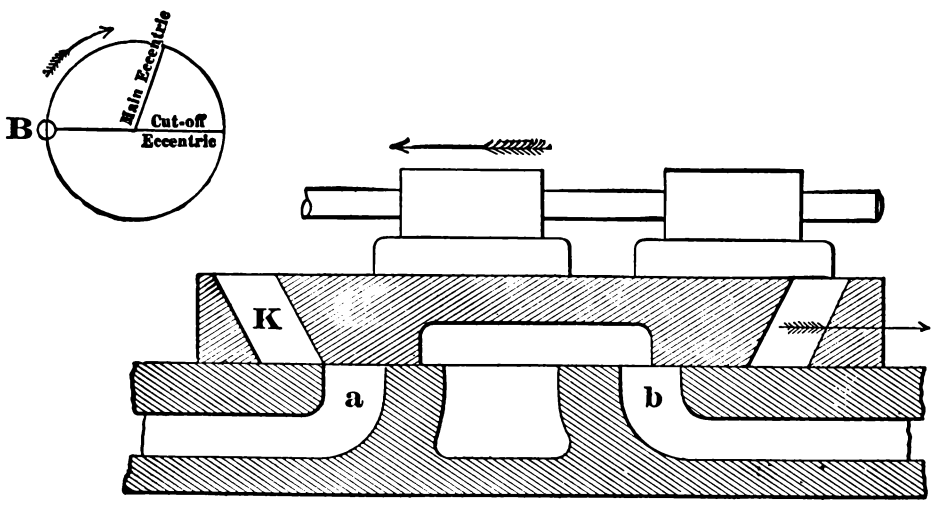

Fig. 2901.

To regulate this distance so as to effect the cut-off at different points in the piston stroke to suit the amount of power the engine may be required to possess, the cut-off valves are provided with nuts P, which are a sliding fit, in the pockets in the backs of the valve, and through these nuts passes a right and left hand screw S, which, on being revolved, moves the valves, either lessening the distance G *g* and M N, or increasing it, according to the direction in which S is revolved. The object of providing vertical adjustment for the nuts P is to permit the cut-off valves to seat themselves on the main valve (notwithstanding their wear) without bending the screw S.

If the work performed by the engine was constant in amount, and the steam pressure also constant, the cut-off valves might be kept in one position on the screw, being adjusted to cut off the steam at the most desirable point, and incapable of moving from that point.

But if the amount of work performed by the engine varies, or when the steam pressure varies, the screw affords means of either varying or maintaining the power of the engine by moving the cut-off valves to alter the point at which live steam will be cut off.

Both the valves shown in Figs. 2899 and 2900 are placed in mid-position, that being the most desirable for explaining their construction, and not in that in which they would stand when properly set upon the engine.

Let the cylinder steam ports and the ports in the main valve be an inch wide, and the main valve have an amount of steam lap equal to half the width of the cylinder steam ports; or, in other words, $\frac{1}{2}$ inch, which will give for the main valve a cut-off at about $\frac{9}{10}$ piston stroke; and the travel of the main valve being just sufficient to fully open the steam ports, the action of the main valve will not be unduly distorted by excessive lap nor over valve travel.

Suppose the edges M G of the cut-off valves to be in mid-position, as in the figure, and to be distant from the nearest edges of the main valve ports, also, to an amount equal to half the width of the cylinder steam port, and these being assumed to be average conditions, we may follow the movements of the ports as follows:

In Fig. 2901 the crank is on its dead centre at the crank end B, the cut-off eccentric being, in this example, set exactly opposite to the crank, and the main valve having no lead. It is here seen that the valves moving in the direction denoted by their respective arrows, the admission of the steam will occur through ports K and *a*, uninfluenced by the cut-off valve.

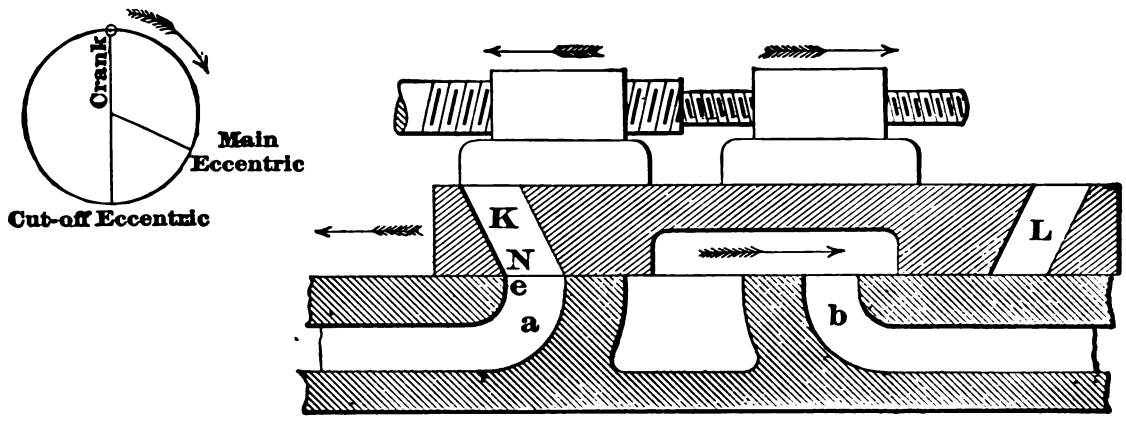

Fig. 2902.

Fig. 2902 shows the position of the crank, the eccentrics, and the valves when the cut-off occurs, the crank being at half stroke; and it is seen that the cut-off is effected by the cut-off valve, independent of the main valve.

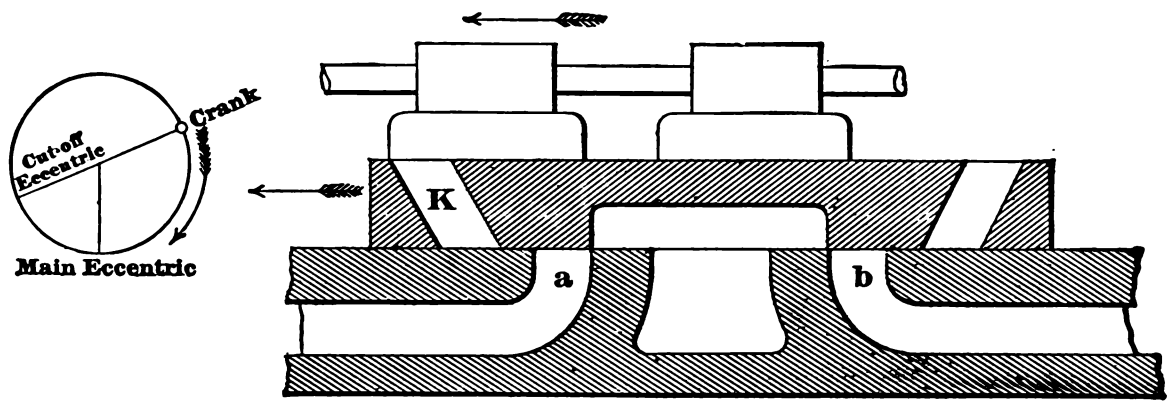

Fig. 2903.

In Fig. 2903 we have the positions of the valves at the point of release or exhaust for the port *a*, thus completing the events for one piston stroke. In moving across the port to effect the cut-off, the cut-off valve reduces the effective width of steam port opening, and it is necessary to take this into account in considering the steam admission. In Fig. 2904, for example, it is seen that, although the main valve steam port K is full open to the cylinder port *a*, yet the effective width of port opening for steam admission is the amount the cut-off valve leaves the port K open.

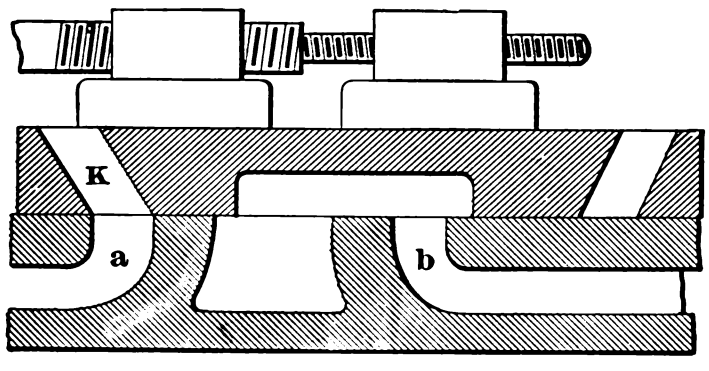

Fig. 2904.

A diagram of the port openings obtained, as in our previous investigations of the D valve, by moving the piston inch by inch throughout the stroke, as given in Fig. 2905, and we find that the port was opened full when the piston had moved 3½ inches, and that the point of cut-off is at the 9th inch of piston stroke. The manner in which the main valve would have cut off steam is shown on the diagram by dots. Thus we find that if the cut-off valves were taken off, the main valve would begin to close the steam port at 9½ inches of piston stroke, and the cut-off would occur at 17¾ inches of piston stroke.

The events for the return stroke are plotted out in the same manner in Fig. 2906, and it is seen that the cut-off valve began to act when the piston had moved 3½ inches, and before the main valve had fully opened the steam port, which is, therefore, never fully opened. The action of the main valve after the cut-off valve has begun to act is here shown by a broken line. As the compression, lead, and exhaust are entirely uninfluenced by the cut-off valve, it is unnecessary to refer to them in connection with its action.

THE POSITION OF THE CUT-OFF ECCENTRIC.—In an adjustable cut-off engine, the cut-off eccentric is usually fixed upon the crank-shaft. When the engine is required to run in either direction, the cut-off eccentric must, in order to enable the engine to run equally well in either direction, be set directly opposite to the crank.

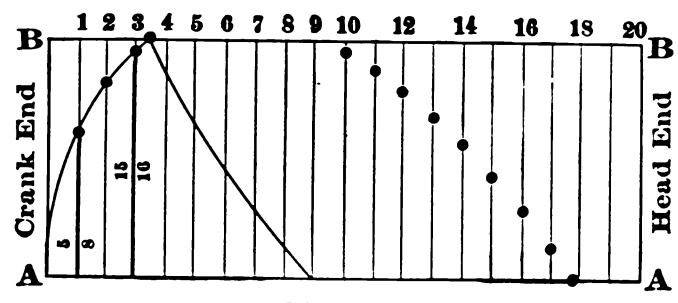

Fig. 2905.

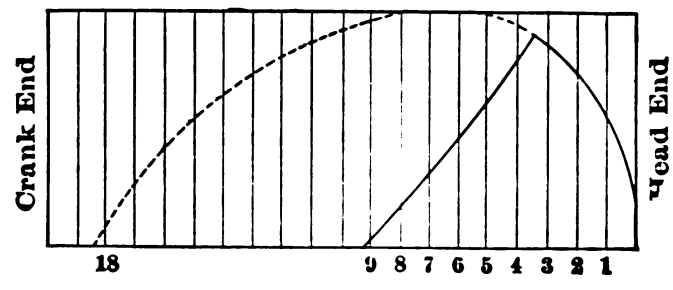

Fig. 2906.

When, however, the engine is required to run in one direction only, there is some latitude in the position in which the cut-off eccentric may be set.

Let it be supposed that the cut-off valves are so set that if placed in mid-position (as shown in Fig. 2899) on the main valve, the edges G and M would be equidistant from the edges *h* J

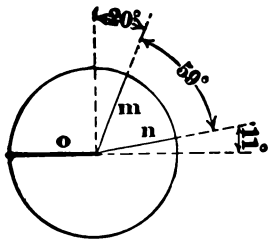

Fig. 2907.

of the ports in the main valve (which, in this case, is equal to one-half the width of the steam port), and we may investigate the limits within which the position of the cut-off eccentric may be varied, as follows :

In Fig. 2907 the circle represents the path of the crankpin and also the path of the centre of the eccentric, the line *o* represents the throw-line of the crank, *n* that of the cut-off eccentric, and *m* of the main eccentric; *n* being 169° ahead of the crank and 59° ahead of the main eccentric, whose angular advance is 20°. The positions of the valves at the point of cut-off are shown in Fig. 2908, and it is seen that the cut-off eccentric has passed the point *x* at which it would move the valve the quickest ; it follows, therefore, that while the cut-off valve has been moving across the port K to effect its cut-off, its eccentric has been moving through that part of its path in which it moves the valve most rapidly.

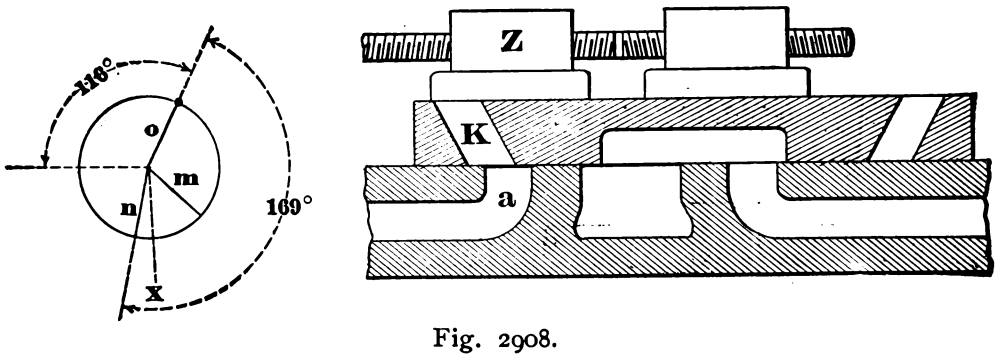

Fig. 2908.

Continuing the motion of the parts, we have, in Fig. 2911, their positions at the time that the main valve cuts off ; and it is seen, on comparing Fig. 2908 with Fig. 2911, that the main and cut-off valves have moved in the same direction and at nearly the same speed.

But at the moment the parts are in the positions shown in Fig. 2911, the main valve is moving faster than the cut-off valve, for two reasons : first, because its eccentric throw-line is nearer to its mid-position *x*, and second, because the eccentric moves the valve faster and further while moving a given amount toward and ending at the line *x* than it does while moving an equal distance after passing it.

This is shown in Fig. 2912, in which L L represents the line of motion of the valve, *m* the position of the centre of the eccentric when 35° on one side of *x*, and *n* its position at the same angle on the other side of *x*. Setting a pair of compasses to represent the length of the eccentric rod, rest one point at *m*, and mark on the line of centres L L the arc *o*. Then rest one point of the compasses at *x* and mark the arc *p* ; and from *o* to *p*, measured along the line L, is the distance the valve would be moved while the

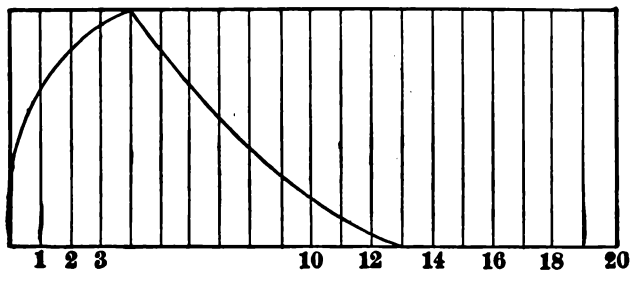

Fig. 2909.

eccentric moved from *m* to *x*. Rest the compasses at *n* and mark arc *q*, and from *p* to *q* on line L is the distance the valve would be moved while the eccentric moved from *x* to *n* ; the difference between the two amounts of valve motion being shown by the arc *r*.

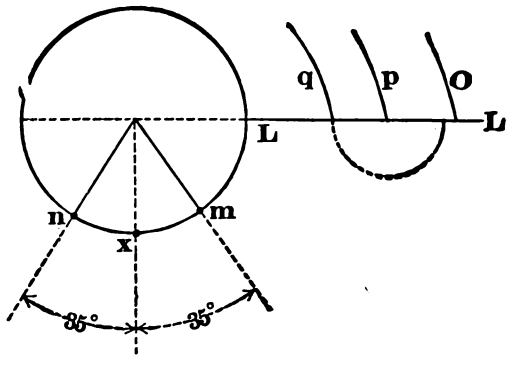

Fig. 2910.

Now, suppose that the main eccentric is at *m*, and it is clear, from the positions of the valves in Fig. 2908, that the position of the cut-off eccentric must be such that, from and after its cut-off it will move its valve at least as fast as the main valve is moved, or else the steam port K will be reopened, and live steam again admitted until such time as the lap of the main valve itself effects the cut-off.

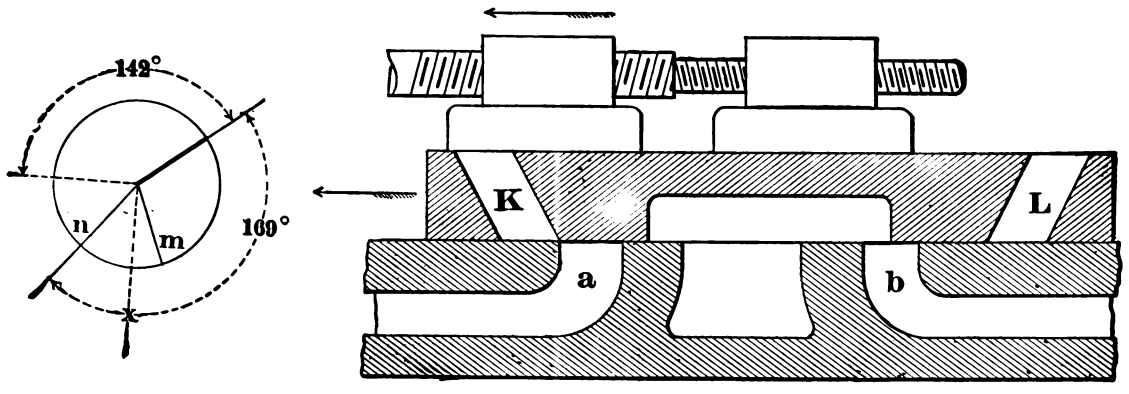

Fig. 2911.

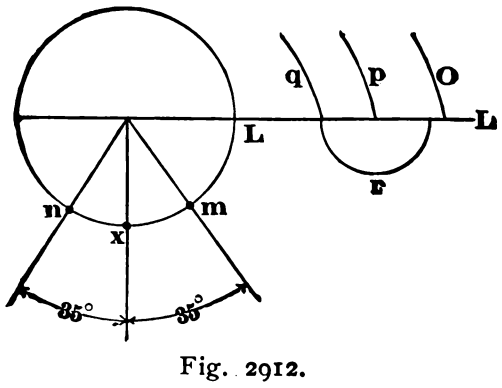

Fig. 2912.

In Figs. 2913 and 2914, we have diagrams showing the steam distribution effected with the eccentrics set as in Figs. 2908 and

2911; and if we compare these diagrams with those shown in Figs. 2905 and 2906 (for which the cut-off eccentric was set directly opposite to the crank), we find, in the case of the forward strokes, the cut-off is at 9 inches in one case and at 13 inches in

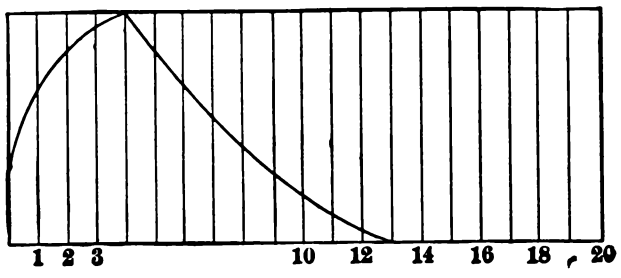

Fig. 2913.

the other; for the return strokes, it is at 9 inches in one case and at 16 inches in the other. We also find that, from the time the cut-off valve commenced to close the port until final closure and cut-off took place, there was, for the two forward strokes, 5½

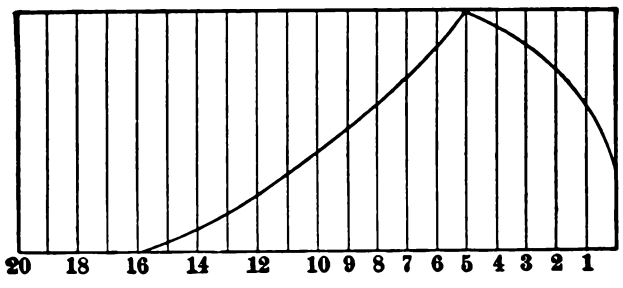

Fig. 2914.

inches of piston stroke in one case and 9 inches in the other, and it appears that setting the cut-off eccentric back 11° (Fig. 2907) delays the point of cut-off and wire draws the steam. The reason that the point of cut-off occurs at such unequal points in the two strokes is that in this case the cut-off eccentric has been set in such position, and its rod made of such length, as would give the longest point of cut-off in each case without letting the port reopen.

point of cut-off for the other stroke), and it is seen that the steam port L is not yet closed. If, to close it, we move the cut-off eccentric ahead (increasing its angle with the crank), we hasten the point of cut-off for the other stroke; while if we lengthen the eccentric rod enough to close L, we shall delay the point of cut-off for the other stroke), and that would, in this case, cause the port to reopen).

The course to pursue is to both lengthen the rod and move the cut-off eccentric as well, adjusting the two until the ports just escape reopening and the points of cut-off are equal. In this way

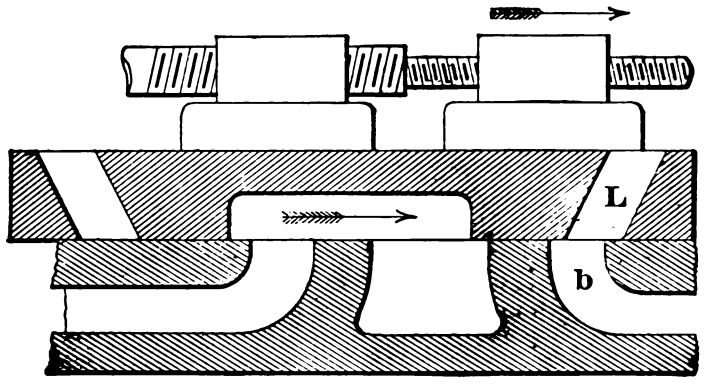

Fig. 2915.

the longest possible equalized points of cut-off are obtained. It may well be pointed out that with the eccentrics set as in Fig. 2908 (both valves moving together after the point of cut-off), the cut-off valve will not act on the forward stroke after the 13th inch of piston stroke; and since the main valve cuts off at the 18th inch of piston motion (as is shown in Fig. 2905), therefore no cut-off can be effected between these two points.

That this cannot be remedied by moving the cut-off eccentric position may be shown as follows: Referring again to Fig. 2908, if the cut-off eccentric was moved farther ahead, its angle of 169° being increased, the cut-off would have occurred earlier; while if this angle was diminished, the cut-off would not be effected by the cut-off valve, because it would not fully cover the port.

This will be seen from Fig. 2916, in which it is moved nearer to

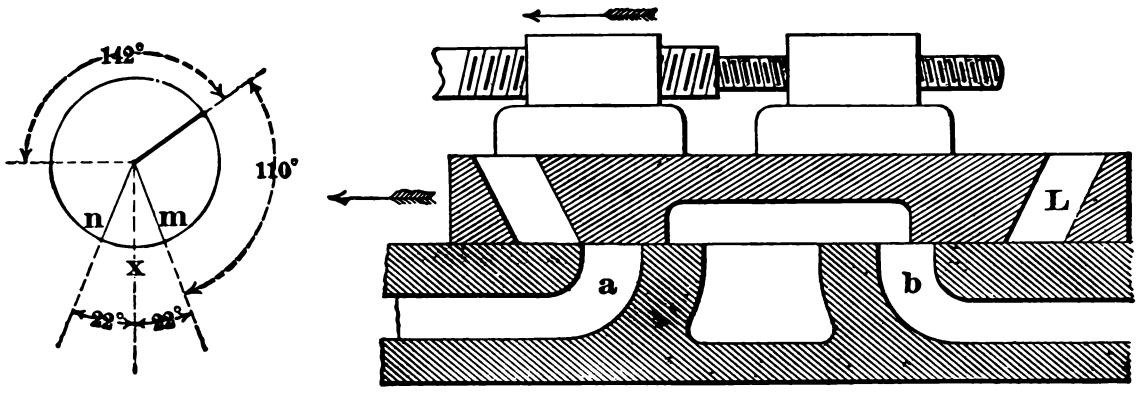

Fig. 2916.

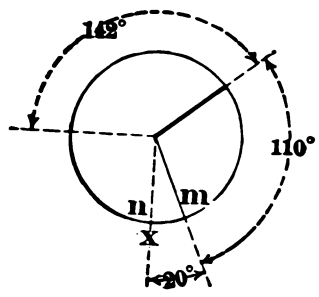

Fig. 2917.

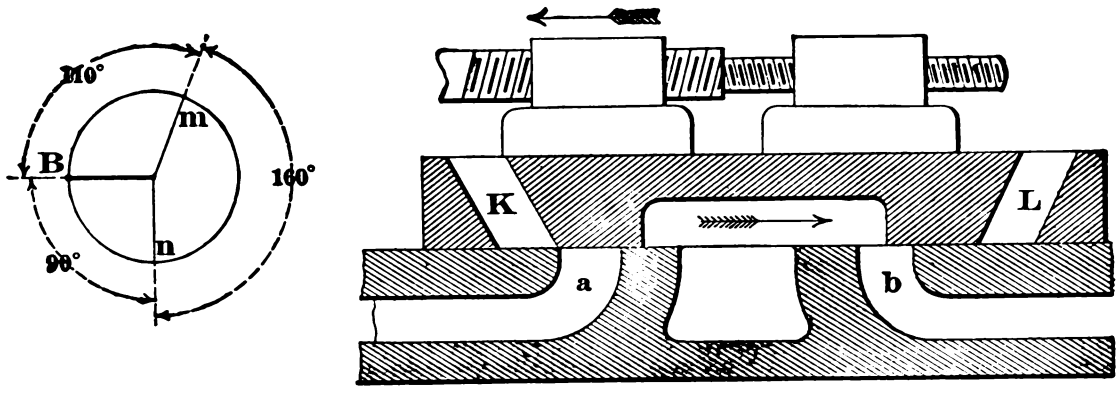

Fig. 2918.

To equalize the points of cut-off, we shall require to move the cut-off eccentric, and shorten its rod.

In Fig. 2915, for example, the positions of the crank, cut-off eccentric, and valves are shown at the time the piston is on the back stroke, and at its thirteenth inch of motion (this being the

x, and as a result the cut-off is effected by the main valve. Finally, if we moved the cut-off eccentric to position x, Fig. 2917, at the time the main eccentric stood at m, the cut-off valve would not effect the cut-off at all, since it would not pass entirely over the main valve port. The cut-off eccentric is thus shown to be in position

to cut off at the latest possible point, without reopening the port when it is set, as in Fig. 2908.

Having limited the position of cut-off eccentric in one direction, we may now proceed to find its limit in the other; or, in other words, find in what position to set it, in order to cut off as early as possible in the piston stroke.

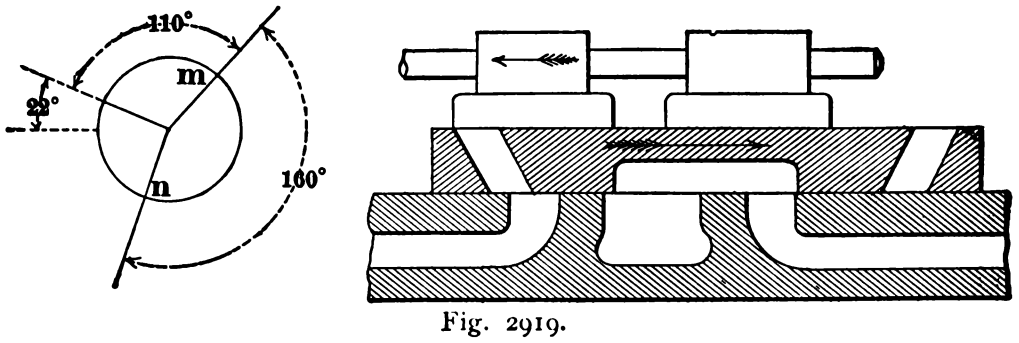

Fig. 2919.

In our previous examples, we have set the cut-off eccentric either at 180°, or opposite to the crank, or else at some lesser angle ahead of the crank; but we may set it at some angle behind the crank instead of ahead of it (it being understood that ahead means less than 180° measured in the direction of crank revolution, and behind the crank means less than 180° measured in the opposite direction to that of the crank motion). In Fig. 2918, for example, it is set at 90° behind the crank; the valve laps, travel, etc., remaining the same as in the previous examples; the crank being on its dead centre B, and the main valve having no lead, the port *a* is closed.

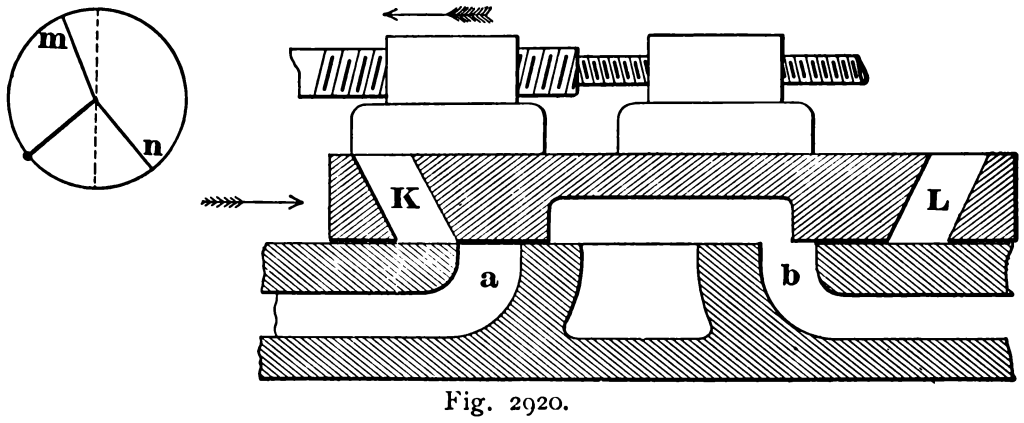

Fig. 2920.

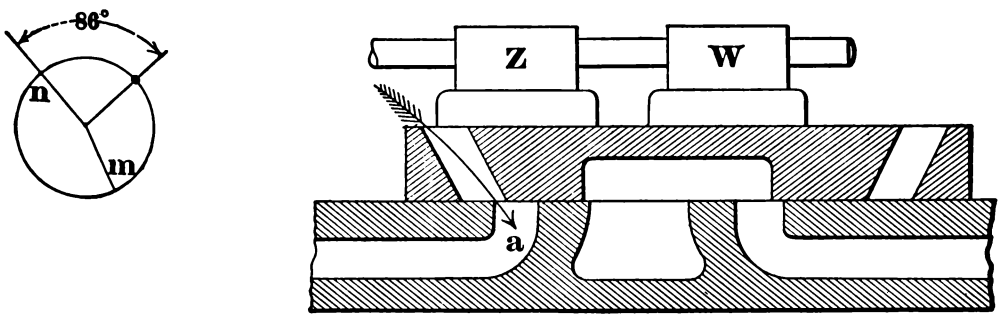

Fig. 2921.

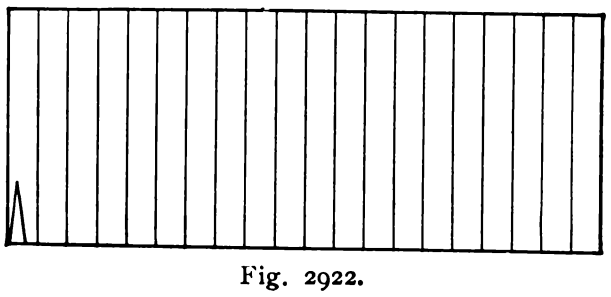
Fig. 2922.

In Fig. 2919, the ports are shown in the position they would occupy at the point of cut-off, the crank having moved but 22°.

On continuing the motion, the ports will arrive at the positions shown in Fig. 2920, from which it will be seen that the cut-off eccentric being at *n*, and the main eccentric at *m*, their movements are in opposite directions. The cut-off valve will therefore keep port K closed until the valves again change direction and approach the positions shown in Fig. 2918, and it is clear that if the cut-off eccentric were set at an angle of less than 90° behind the crank, the cut-off valve would first effect the cut-off, as in Fig. 2919, and then lag behind and permit K to reopen. In Fig. 2921, for example, we have moved the cut-off eccentric to 86° behind the crank, and the cut-off valve, after having cut off the stem, lags behind and has begun its return stroke, causing the ports to reopen and live steam to reënter, as denoted by the arrow. The least permissible angle behind the crank for the cut-off eccentric is, therefore, 90°.

The steam port opening of the valves, in Figs. 2918 and 2919, is given in Figs. 2922 and 2923, where it is seen that the ports open less than a quarter inch, and close when the piston has moved ½ inch on the forward and ¾ inch on the return stroke.

We have thus found the limits within which the cut-off eccentric can be moved on the shaft in either direction when the valves have the proportions given. In the following examples the proportions are as follows:

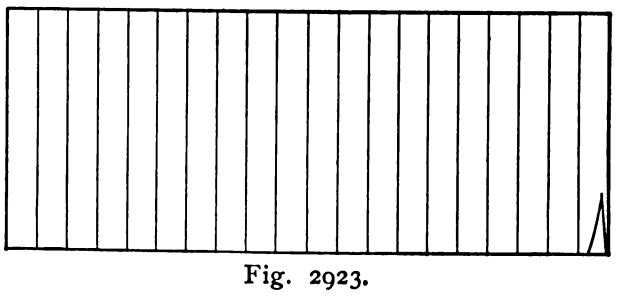
Fig. 2923.

	Inches.
Stroke of piston	18
Length of connecting rod	54
Width of steam port	1
Steam lap	¼
Lead of valve	3/16
Travel of main valve	3
Travel of cut-off valve	3

In Figs. 2924, 2925, 2926, and 2927, we have the port opening when the eccentric is set to cut off at $\frac{1}{6}$, $\frac{1}{3}$, $\frac{1}{2}$, and $\frac{2}{3}$ of the stroke, while for the longest it stands 11° ahead, a difference of 6° only for the whole range of cut-offs; but, if we alter the amount of lap

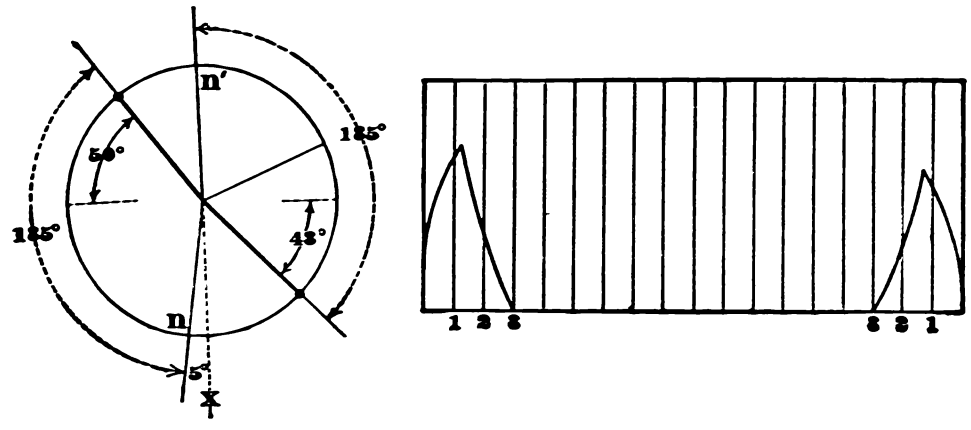

Fig. 2924.

the proportions of the valves and ports remaining unchanged, the eccentric having been moved upon the crankshaft in order to effect the cut-off at the respective points. Here we find that when on the cut-off valve, and adjust the length of the cut-off eccentric rod so as to equalize the points of cut-off for the two strokes, we shall alter the position of the cut-off eccentric.

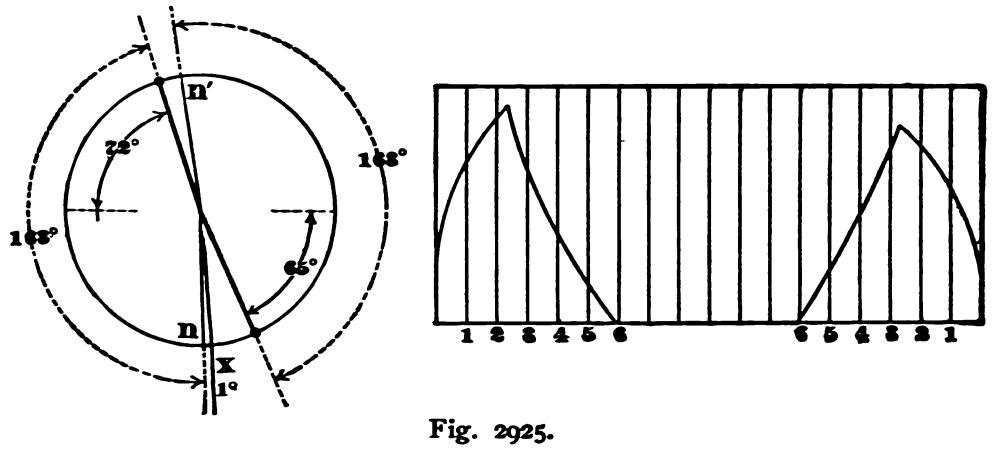

Fig. 2925.

the cut-off is to occur at less than half-stroke, the cut-off eccentric is at an angle of less than 180° *behind* the crank; while when it

Suppose, for example, that we reduce the cut-off lap to $\frac{1}{4}$ inch; that is to say, let the edges of the cut-off valve each come (when

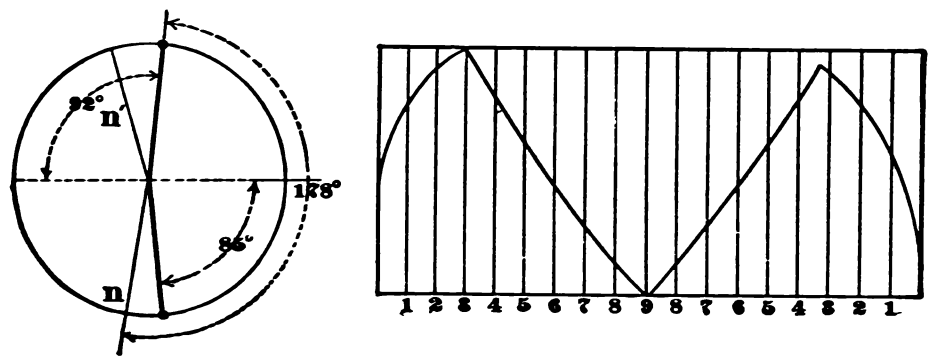

Fig. 2926.

is to occur later than at half stroke, the cut-off eccentric is at an angle of less than 180° *ahead* of the crank, the extremes of its position being for the shortest cut-off ($\frac{1}{3}$), 135° behind the crank,

it is in mid-position, as in Fig. 2899) within $\frac{1}{4}$ inch, instead of the $\frac{1}{2}$ inch in our previous examples, of the nearest edges of the ports, in the main valves, and the effect is shown in the following figures:

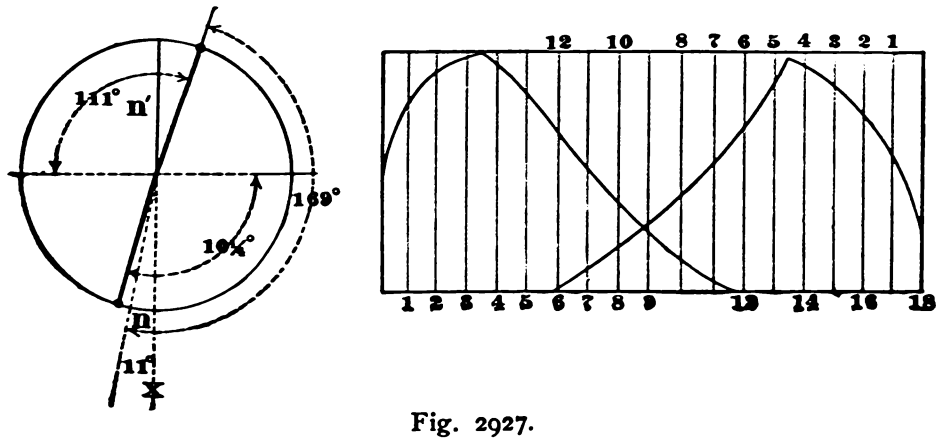

Fig. 2927.

and for the longest, 169° ahead of the crank. But its position at the time the cut-off occurs varies but 6°; thus at the $\frac{1}{3}$ cut-off it stands at the point of cut-off 5° ahead of its mid-position x,

In Fig. 2928, the cut-off is at $\frac{1}{6}$ stroke, and we find that the cut-off eccentric stands 5° behind the line x, instead of 5° ahead of it, as it was in Fig. 2924; also we find that the point at which the

port begins to close is at $1\frac{3}{4}$ inches, instead of $1\frac{1}{4}$ inches as before, thus giving a greater, and therefore better, port opening.

On the return stroke, we find the widest port opening in both cases at $1\frac{3}{8}$ inches of piston motion; but in Fig. 2928, the port is a trifle wider open at the second inch, which is a slight gain, as the steam is less wire drawn.

In Fig. 2929, the cut-off being at $\frac{1}{8}$ stroke, the port openings are about equal to those in Fig. 2925, and the cut-off eccentric stands (at the point of cut-off) 11° behind the line x instead of 1° ahead

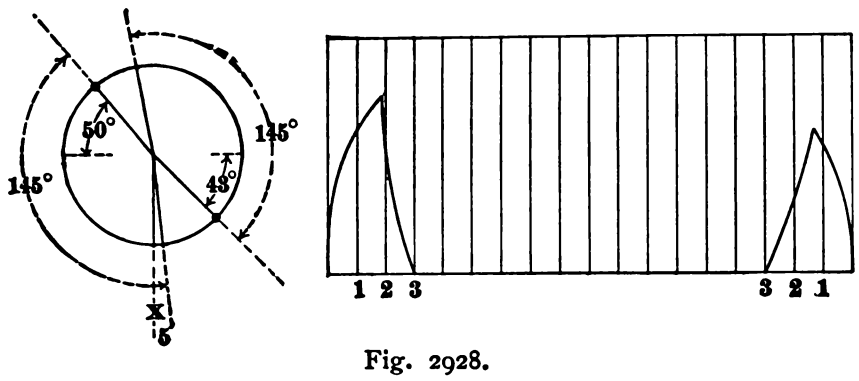

Fig. 2928.

of it, as it did in Fig. 2925. In Fig. 2930 (the point of cut-off being at $\frac{1}{2}$ stroke) the port openings are about the same as those in Fig. 2927, the cut-off eccentric in this case standing at the point of cut-off at 8° behind x instead of being ahead of it, as in Fig. 2927. In Fig. 2931, the cut-off being at $\frac{3}{8}$ stroke, the cut-off eccentric stands at the point of cut-off on the line x instead of 11° ahead of it, as in Fig. 2927.

Thus we find that the reduced lap has made but a very slight difference in the port openings, although it has thrown the cut-off

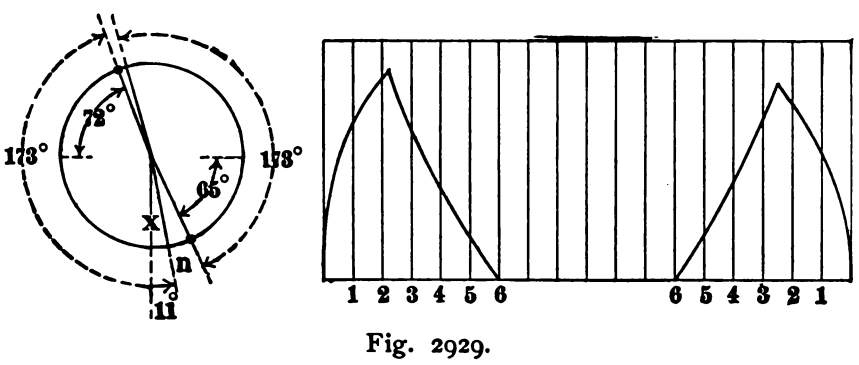

Fig. 2929.

eccentric back in each case. But by this means the valve is enabled to cut off at a later period in the stroke without reopening the ports, as may be seen from Fig. 2932, in which the cut-off occurs at the 15th inch; whereas, with the greater cut-off lap, 12 inches was the latest point at which the cut-off could be effected without reopening the port. It will be noticed that both in Figs. 2931 and 2932 the line is rounded somewhat at the point where the port begins to close, and this occurs because the main valve

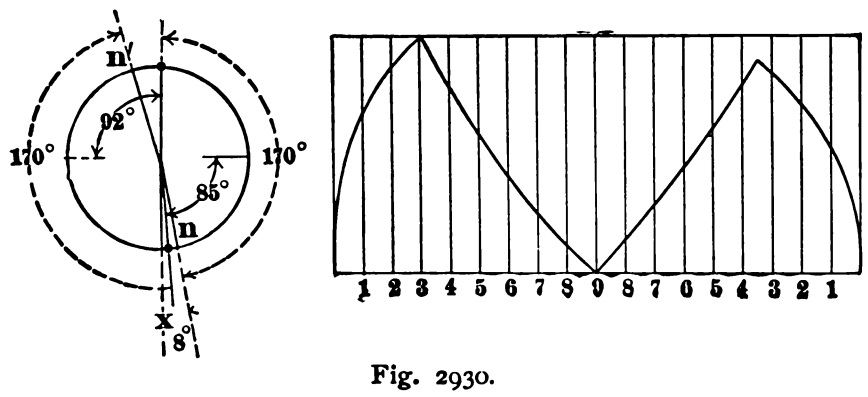

Fig. 2930.

begins to close the port before the cut-off valve comes into action, as may be seen from Fig. 2933. The rounded corner *e*, Fig. 2932, shows the cut-off by the main valve. The rounded corner *f*, Fig. 2932, is caused by the valves acting in opposition to one another, the main valve moving in the direction to open and the cut-off in the direction to close the port. It may now be pointed out that if the engine is required to run backwards as well as forwards, as in the case of marine engines, the cut-off eccentric is usually set at 180° from, or directly opposite to, the crank, and the action will be the same, let the direction of revolution be what it may.

VARYING THE POINTS OF CUT-OFF BY MOVING THE CUT-OFF VALVES.—We may now assume the cut-off eccentric to be fixed upon the crankshaft, variations in the points of cut-off being effected by moving the valves by means of a right and left hand screw, which was shown in Fig. 2899. Let the engine be required to run in one direction only, and the proportions to be as before, with the requirement that the cut-off be made adjustable at all

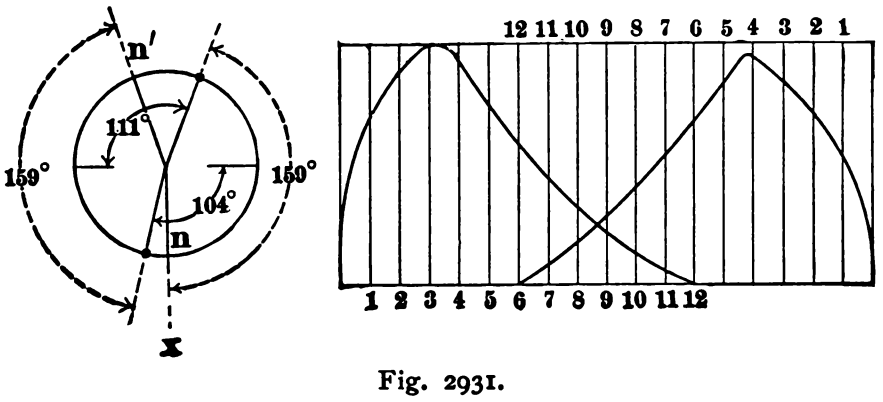

Fig. 2931.

points between $\frac{1}{4}$ and $\frac{3}{4}$ stroke, and the first question that arises is at what point in the stroke are the two points of cut-off to be equalized, because the cut-off eccentric must be set in such a position as to accomplish that end at some particular point in the stroke, letting the variations come as they may at other points of cut-off.

It would naturally suggest itself that the point of equalization of cut-off be made midway between the two extremes of $\frac{1}{4}$ and $\frac{3}{4}$, or in this case at half stroke, the positions of the parts and the

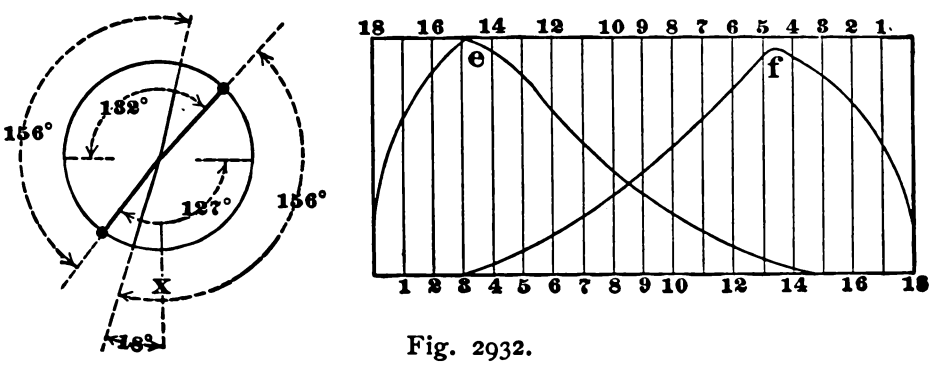

Fig. 2932.

port openings will be as in Fig. 2933; but when we come to move the valves apart with the screw S, Fig. 2899, to effect the cut-off at $\frac{3}{4}$ stroke, we find the port will reopen on the stroke when the piston is moving from the crank end to the head end, and cut off too early on the stroke when the piston is moving from the head end to the crank end. It appears, then, that the position of the cut-off eccentric must be adjusted to conform to the requirements of the longest point of cut-off required, which, in this case, has

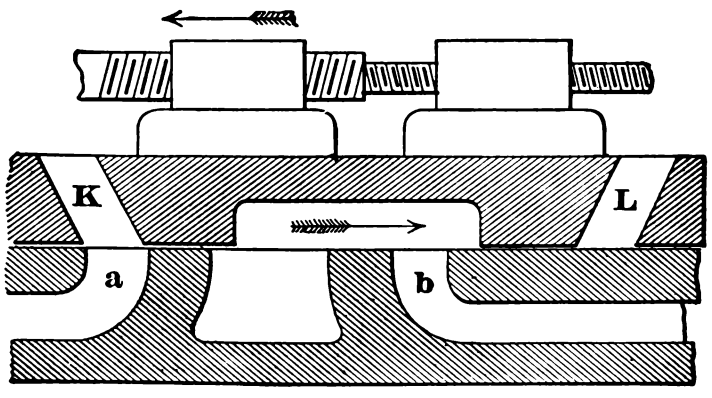

Fig. 2933.

been selected at three-quarters of the piston stroke, or at $13\frac{1}{2}$ inches.

It has been shown that the port nearest to the crank is the one in which the port reopening occurs first; this, therefore, is the one to be dealt with in finding a cut-off eccentric that will not effect a reopening of the port, which may be done as follows:

From a centre C, Fig. 2934, draw a circle B D having a diame-

ter equal to the travel of the main valve, and whose diameter on the line B C D also represents the piston stroke on same scale. As the diameter of the circle is, in this case, 3 inches, and the piston stroke is 18 inches, the scale is one-sixth full size.

From centre C draw a circle *d* whose radius C*d* equals the

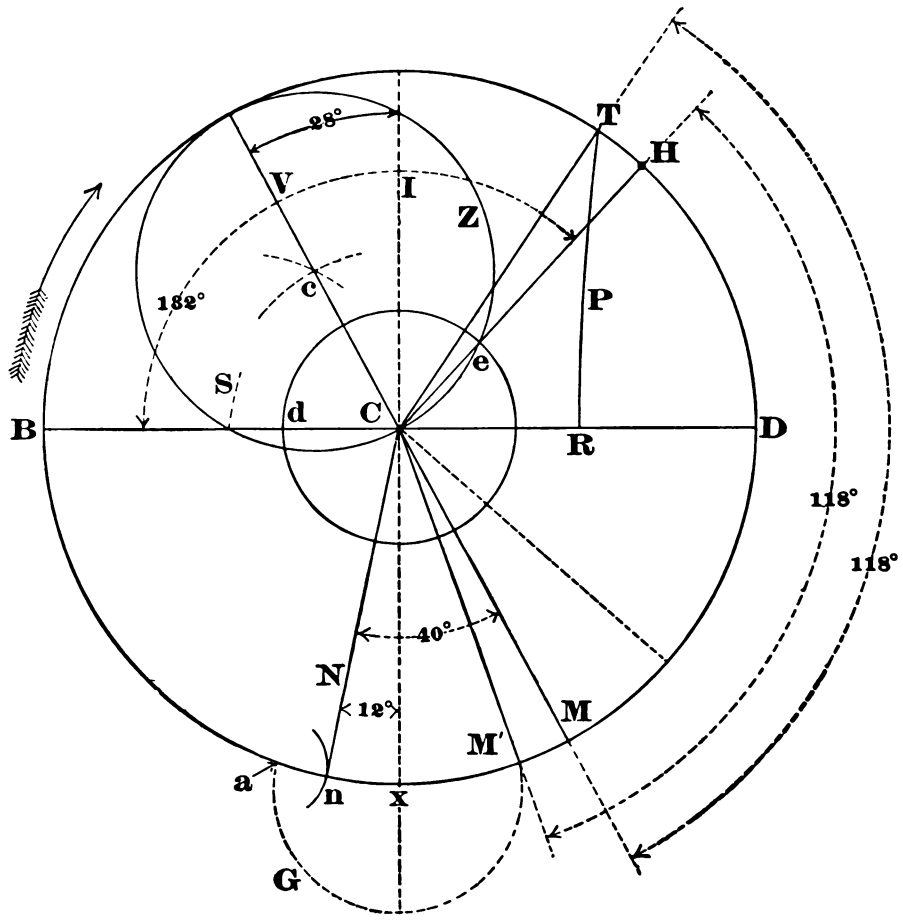

Fig. 2934.

steam lap of the main valve. Then mark the point S distant from *d* to the amount of lead the main valve is to have (in this case $\frac{3}{16}$ inch), and with half the distance C B as a radius, mark from S and from C the dotted arcs intersecting at *c*; draw the line V, passing from C, through the intersection *c*, and this line will represent the throw-line of the eccentric set as much behind the line I as it will stand ahead of it when the crankpin is at B, the path of crank revolution being as denoted by the arrow.

Having determined the angle of the main eccentric, which is the angle V I C (equal to 28° in this case), we may proceed to find the position of the crank at the time the main valve would cut off steam, and from this we can then find the position of the main eccentric at the point it would cut off. From these two we may next find the position of the cut-off eccentric required to cut off at three-quarter stroke without reopening the port. To find the position of the crank at the time the main valve would cut off, we simply draw from the centre C a line passing through *e*, where the steam lap circle crosses the valve circle Z, and this gives us at H the required crank position, being, as marked, 132° from B. From H we may find the position of the main valve at the time it cuts off, as follows:

We have found that with the crank at B the main eccentric would stand 28° *ahead* of line I, and as I is 90° from B, we have 90° plus 28°, or 118° as the number of degrees the main eccentric stands ahead of the crank; hence we mark the line M' at 118° ahead of H, showing the position of the main eccentric when the crank is at H and the main valve cuts off.

We now find the positions of the crank and main eccentric when the piston is at $\frac{3}{4}$ stroke, because from these we may locate the necessary position of the cut-off eccentric.

First, then, we mark point R three-quarters of the distance from B to D (this distance representing the piston stroke), and then, with compasses set to represent the length of the connecting rod on the same scale as B D represents the piston stroke (one-sixth full size), we mark from R the arc P, giving at T the position of the crank when the piston is at R. Now, as the main eccentric is 118° ahead of the crank at T, we may mark M, which is the position of the main eccentric when the cut-off valve is to cut off, the crank being at T and the piston at R.

While the main eccentric is moving from M to M', the cut-off eccentric must move its valve as fast as the main eccentric moves *its* valve; and all we have to do is to find where to place it in order to enable it to do so, which we may accomplish as follows:

By marking (from *x* as a centre) a semicircle G having a radius *x* M', we find at *a* the position of the cut-off eccentric at the time the main valve has arrived at M' and would cut off the steam, and from this point *a* we may obtain the position of the cut-off eccentric at the time its valve is to cut off by setting the compasses to the distance between M and M', measured on the circle, and marking from *a* an arc *n*, from which we may mark line N, giving the position for the cut-off eccentric at the point of its valve's cut-off, the crank being at T, the piston at R, and the main eccentric at M. Now, suppose the piston, the crank, and the main cut-off valve to stand in these respective positions, and the cut-off, by cut-off valve, will occur while the main eccentric is at M and the cut-off eccentric is at N, and being nearer to its mid-position *x* than M is to its mid-position *x*, therefore N will move its valve fastest, and the port cannot reopen.

While the main eccentric moves from M to M', the cut-off eccentric moves from N to *a*, being at each point in its movement nearer to *x* than M is, and therefore moving its valve faster. On arriving at *a*, however, N and M will be equidistant from *x*, and they will move their valves at equal speeds. At this time, however, the main valve will have closed the port and reopening cannot occur.

Having found the positions for the crank, the main eccentric, and the cut-off eccentric, at the time of cut-off on the piston stroke from B to D, the crank having started from B and moved to T, we may now find the corresponding position for the valves. In the upper half of Fig. 2935 we have marked the positions of the crank, the cut-off eccentric, and the main eccentric, simply transferring them from Fig. 2934. To find the corresponding positions of the main valve, we mark from the main eccentric position the dotted line *m p*, giving the point *p*. Now, since the line B D represents the stroke of the valve, and line *x* the valve's mid-position, therefore the radius from *p* to the line *x*, measured on the line B D, is the distance the main valve must stand from its mid-position when the main eccentric stands at *m*.

Now, if the centre of the main valve stood on the line H, it would be in mid-position, and all we have to do is to mark from H a line P distant from H to the same amount that *p* is distant from the line *x*, and from this new centre P we draw in the main valve.

The cut-off valve we draw in position, to just close the port K

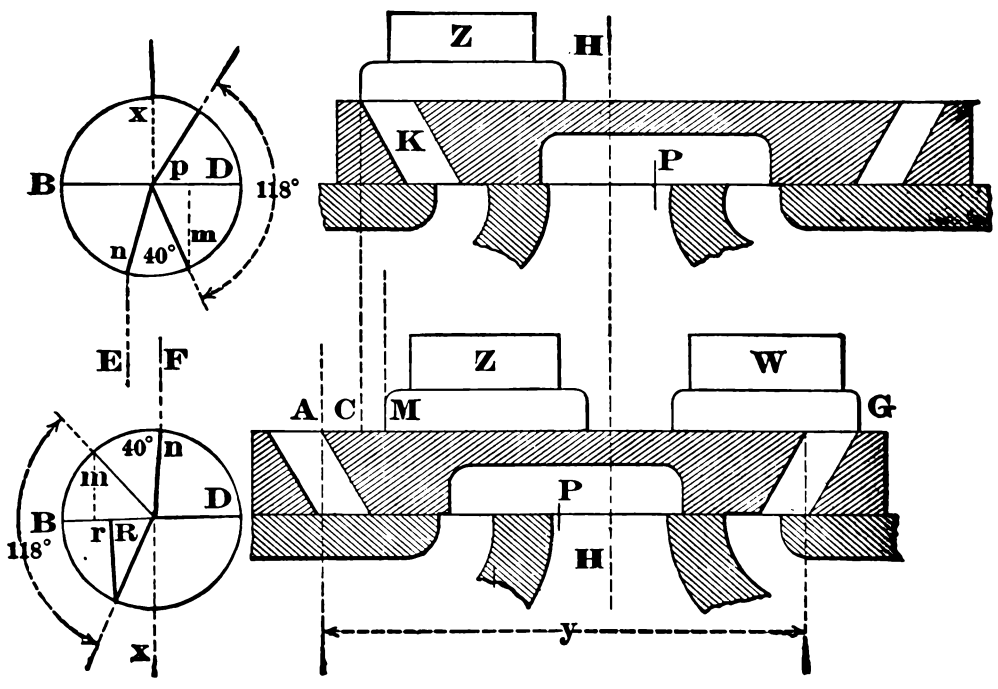

Fig. 2935.

at the crank end. For the return stroke we draw, on the lower half of the cut, B D, representing the valve travel, and also the piston stroke as before; then mark the piston position R at the point of cut-off, and from this obtain the crank position, as in previous examples. From the crank position we mark the main eccentric throw-line *m* 118° ahead, and from this the cut-off eccentric throw-line 40° ahead of the main eccentric. From *m* we draw the line *r*, showing what distance the main valve has moved from its mid-position, this distance being from *r* to *x*, measured on the line B D; or, in other words, from *r* to the centre of the circle. We transfer this distance from H, obtaining P as a centre wherefrom to draw in the main valve, and then we draw in the cut-off valve W, in position to just close the port; knowing that to be its position at the point of cut-off, and corresponding to the positions of the crank and the eccentrics.

Having found, for both piston strokes, the positions of the main

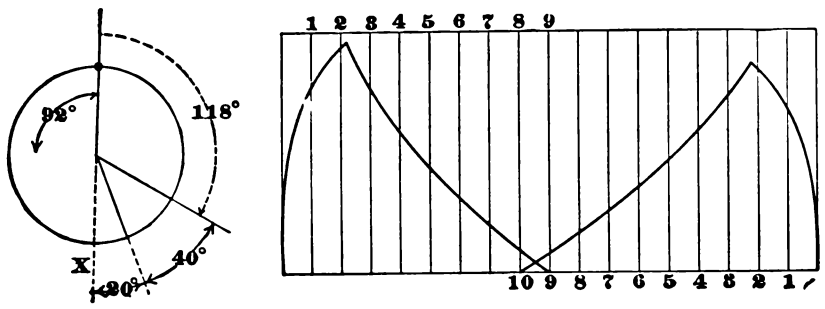

Fig. 2936.

and cut-off valves at the point of cut-off, we may find, therefore, the amount of lap the cut-off valves are given by this construction, the method being as follows:

We have, in the upper half of Fig. 2935, the valves in position at the point of cut-off for the return stroke, or while the piston is moving from the head end of the cylinder towards the crank, and we require to find the position of the cut-off valve Z on the lower half of the diagram, because this will give us the distance between the two outside edges of the cut-off valves, and from this we can easily ascertain the lap.

Now, in moving from the point of cut-off on one stroke to that of the other, the cut-off eccentric has moved from *n* in the upper half to *n* in the lower half of the figure, the difference in its distance from mid-position *x* being shown by the dotted lines E F; all we have to do, then, is to draw a dotted line C from the edge of the valve in the upper half of the figure, and draw in the cut-off valve, letting its edge M be put back from dotted line C to an

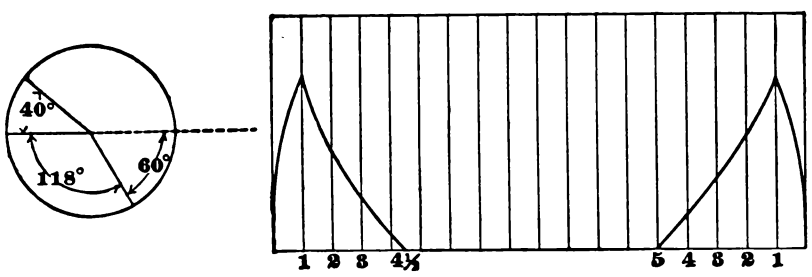

Fig. 2937.

amount equal to the distance between the lines E F, and the positions of the eccentrics and both valves will be shown on the lower half of the figure.

To find the amount of cut-off lap, subtract the width apart M G of the cut-off valves from the width apart of the inside edges of the main valve ports; or, in other words, from distance *y* in Fig. 2935.

If we move the cut-off valves apart by means of the adjusting screw, sufficient to effect the cut-off at half stroke on the forward stroke, the point of cut-off will be at 10 inches on the return stroke, as is seen on the diagram of the port openings in Fig. 2936.

By moving the valves still further apart, to effect the cut-off at ¾ stroke, there is a variation of ½ inch in the two points of cut-off, as is seen in the diagrams of the port openings in Fig. 2937. This may be obviated to some extent, by giving to the screw thread that moves the cut-off valve W a coarser pitch than the thread that moves Z, so as to move it more, a plan that is not infrequently resorted to.

It will be noted that, throughout the whole of the diagrams of the cut-off valves, the steam port openings are greatly reduced by the action of the cut-off valve, which, assuming the full area of the steam port to be required for the admission, causes the steam to be wire drawn, especially at the early points of cut-off. This may, to some extent, be remedied, by giving to the cut-off valve an increase of travel.

It has been shown that in a simple slide valve the port openings may be increased by increasing the amount of valve travel; but when a cut-off valve is used, it is not permissible to give the main valve over-travel, because the main valve would then begin to close the port, instead of permitting the cut-off to be effected entirely by the cut-off valve. The effect of giving to the cut-off valve more travel than the main valve, and the method of finding the positions of the eccentrics for any given amount of cut-off valve over-travel, is shown as follows:

We first find the positions of the main valve and the crank at the point of cut-off, by the construction in Fig. 2938, which is, in this respect, merely a repetition of former examples. B D represents the full travel of the main valve, and the large circle the

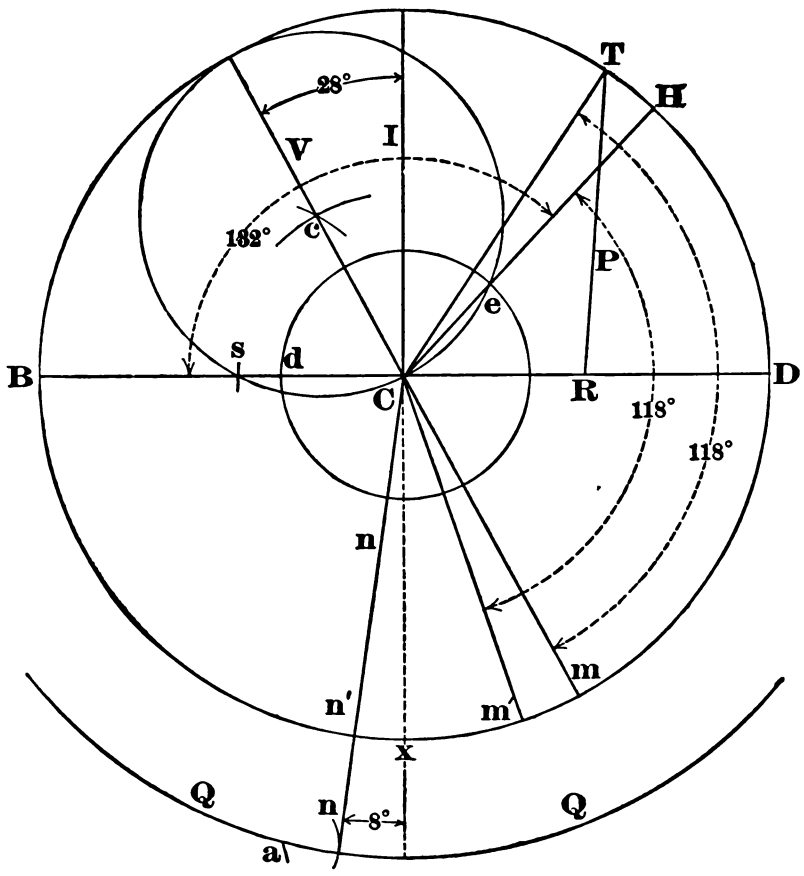

Fig. 2938.

path of the crank drawn to scale; *d* is the lap circle; *d s* is the valve lead; V I C the angular advance of the main eccentric (placed, for reasons already explained, behind instead of ahead of the line I); H is the position of the crank, and *m'* the main eccentric, these two latter standing in the position they would occupy at the time the main valve would effect the cut-off; R is the position of the piston at the time we wish the cut-off valve to effect the cut-off; and T the crank position corresponding to piston position R. We mark *m* behind *m'* to the same amount that T is behind H, and thus have the positions of the crank and of the main eccentric, at the time the cut-off valve is to effect the cut-off. To find the position for the cut-off eccentric, we mark arc Q Q distant from the circle B D to half the amount of over-travel of the cut-off valve; hence, as Q Q is ½ inch from circle B D, the cut-off valve will have, in this case, an inch more travel than the main valve.

We then set a pair of compasses to the radius *x m'* on circle B D, and transfer it to circle Q Q, getting the radius *x a*. Then transfer the radius *m' m* from *a*, and get arc *n* on Q Q, from which get *n'* or the position for the cut-off eccentric at the time its valve is to cut off. The method of finding the required amount of lap on the cut-off valve is the same as has already been ex-

plained with reference to Fig. 2935; hence we may now examine the port openings given by the new condition, viz.: one inch of over-travel for the cut-off valve.

Fig. 2939 shows in the full lines the port opening for the cut-off at three-quarters stroke; Fig. 2940 shows in the full lines the cut-

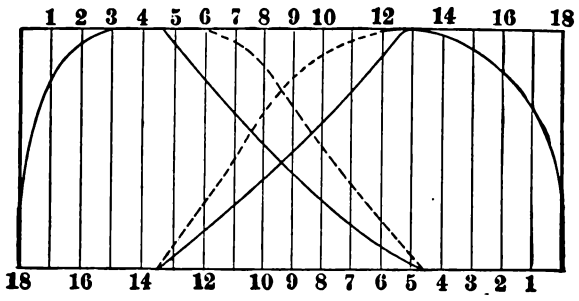

Fig. 2939.

off at half stroke, and Fig. 2941 shows in the full lines the cut-off at one-quarter stroke; and it is seen, on comparing these with previous examples, that the port openings are improved. At the three-quarters stroke, the port openings are considerably increased and reopening avoided. At half stroke the port openings are also

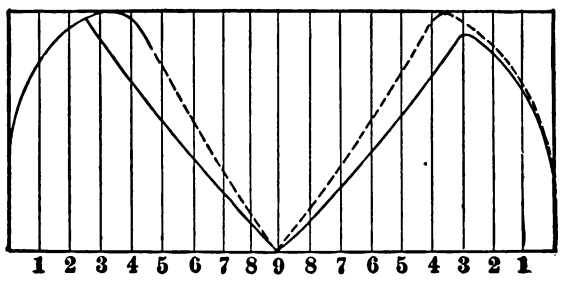

Fig. 2940.

increased, as may be seen by a comparison with Fig. 2936, while at one-quarter, the openings are wider at the 2d and 3d inch of piston motion on the forward stroke, but about the same on the back stroke, as those in Fig. 2937.

But we may further increase the port openings by giving to the cut-off valve a further increase of travel, making it 5 inches instead of 4 inches, and leaving the main valve at its original stroke of 3 inches. The port openings, with 5 inches of cut-off valve stroke, are marked on the last three diagrams in dotted lines, and it is seen that the increase is considerable in the longer points of cut-

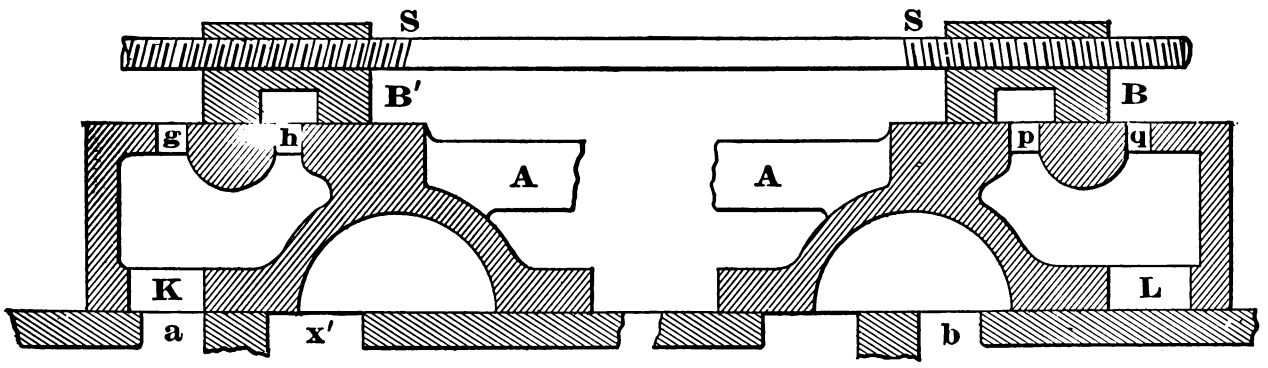

Fig. 2942.

off, but not so great in the shorter ones, and, also, that the points of cut-off are more nearly equalized for the two strokes, let the cut-off occur where it may. It is usual, therefore, to give to the cut-off valve more travel than the main valve; and from what has been said, the student may readily plot out diagrams from any given dimensions, and work out the port openings for himself.

Fig. 2942 shows a Meyer cut-off valve with the cut-off valve double ported, to increase the steam supply and give a sharper cut-off. The valve in this case is made in two sections joined together by the stem A A; this construction saves steam by reducing the length of the cylinder steam passages. The exhaust ports of both the main valve and of the cylinder in this case only need to equal in width one and a half times that of the steam ports K and L.

A double ported valve for a Meyer cut-off for a fixed point of cut-off is shown in Fig. 2943. The ports K L in the main valve are made wider than the cylinder ports *a* and *b*, so that they may

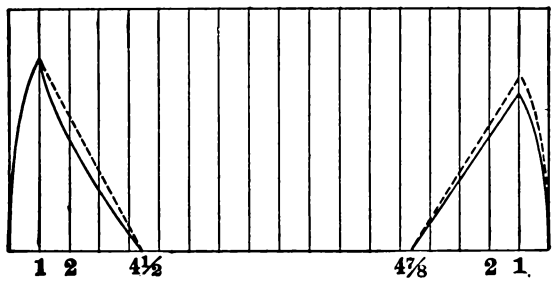

Fig. 2941.

not unduly close them when the main valve stroke is increased to effect the earlier points of cut-off.

Fig. 2944 is an example of a multi-ported, or gridle expansion, or cut-off valve, the main valve having the two ports K and L on its face, and the four *g h p q* on its back. The cut-off valve has four corresponding ports *s t u v*, and as only one cylinder port can admit steam at one time, a full supply of live steam is obtained so long as the combined openings of the ports *g h p q* equal the port opening of the cylinder port. Thus, if the cylinder ports are an inch wide, and the ports *g h p q* are each one-quarter open, the total opening will be an inch, because the four quarters equal an inch; and if at this point in the piston motion the cylinder port is open an inch, the steam supply is not decreased by the cut-off ports.

The ports in the cut-off valve are made wider than *g h*, etc., in the back of the main valve, because, by this means, the cut-off eccentric is brought into a better position to effect a quick cut-off and avoid wire drawing, as will be understood from Fig. 2944, in which the full lines represent the ports in the cut-off valve made

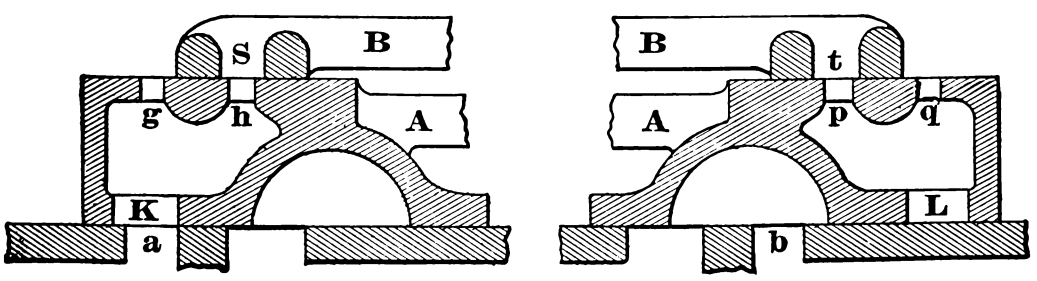

Fig. 2943.

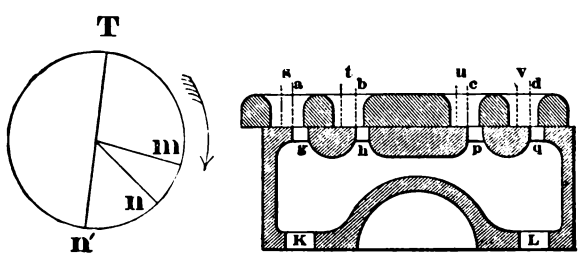

Fig. 2944.

twice as wide as those in the back of the main valve, and the dotted lines show the cut-off ports if made of equal width with the main valve ports *g h*, etc. The main eccentric is at *m*, and with the cut-off ports made twice as wide as *g h*, the cut-off eccentric

will be at *n* when the valves are in the positions shown, and when the cut-off takes place, the cut-off eccentric will have arrived at *n'*. Thus it will be seen that through widening the ports in the cut-off valve, the cut-off has been effected with the cut-off eccentric in the most desirable position for cutting off quickly.

Now, suppose that the ports in the cut-off valves were as denoted by the dotted lines, or, in other words, were of equal width with those in the back of the main valve, and in that case the cut-off eccentric will be at *n* when the cut-off is effected, the port edges *a b c d* of the cut-off valve having closed ports *g h*, etc., and the cut-off valve will not have been moved so quickly, hence the steam would be more wire drawn. Another and important

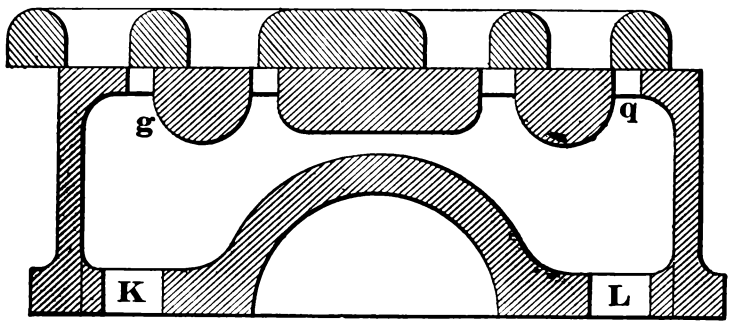

Fig. 2945.

consideration is that in order to effect the cut-off at late points in the stroke, the cut-off eccentric would require to be placed nearer to the main eccentric, and the two would travel at a more nearly equal speed, causing a very slow cut-off port closure, and therefore great wire-drawing. This may be seen as follows:

Taking the dotted lines to represent the cut-off valve ports, and the cut-off will be effected with the crank at T, the main eccentric at *m*, and the cut-off eccentric at *n*. To enable the cut-off to take place at a later point in the crankpath, we must put the cut-off valve back (or to the right of the figure); and to do this, we must put the cut-off eccentric *n* back, or nearer to the main eccen-

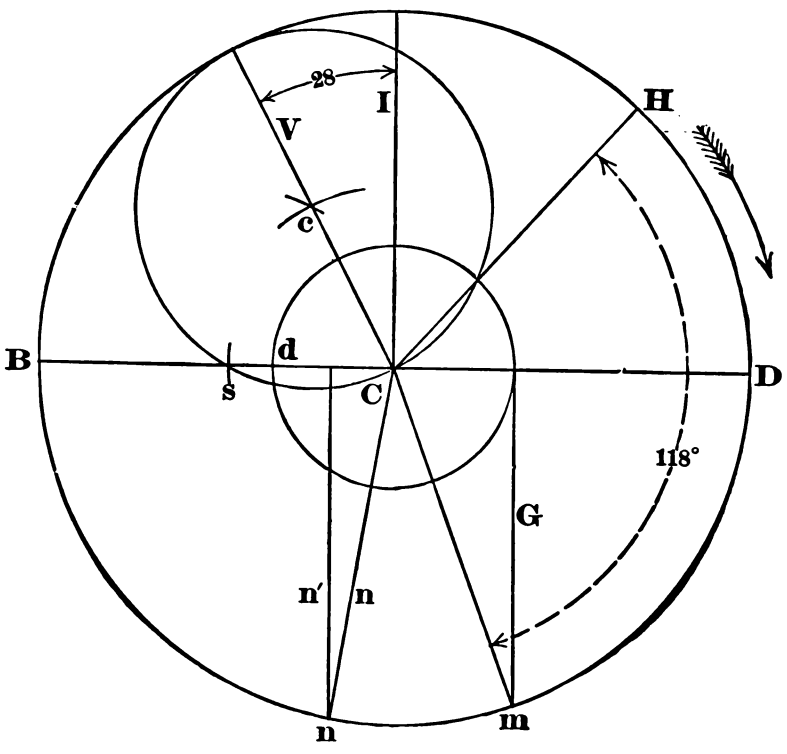

Fig. 2946.

tric *m*, causing both valves to travel at a nearly equal speed, and, as before stated, effecting a very slow cut-off port closure.

The extra width of the cut-off valve ports must be situated equally on each side of the ports in the main valve when the two valves are placed in mid-position, as in Fig. 2943, so that the ports may all close simultaneously.

To investigate the action of the valves, and locate the positions of the eccentrics for any point of cut-off, we first find the positions of the various ports at the point of cut-off, by the construction shown in Fig. 2946, H being the position of the crank, and *m* that of the main eccentric when at the point of cut-off. It being assumed that the cut-off valve is to be set to cut off at its longest point at the same time as the main would cut off, we may locate the corresponding position of the cut-off eccentric from that of the main eccentric as follows:

In Fig. 2947, we have the positions of the valves corresponding to crankpin position H and main valve position *m* in Fig. 2946; and in Fig. 2948, we have the ports *t u v*, etc., in the cut-off valve twice as wide as those in the back of the main valve; and it will be found that the cut-off eccentric must be set in advance of the main eccentric sufficiently to move the cut-off valve the distance *e*, or that between the dotted lines W and Z, the former being fair with the outside edge of the main valve port, and the latter fair with the opposite edge of the cut-off port.

Supposing the ports *g h*, etc., to measure ½ inch, and ports *t u v*, etc., to measure an inch, and the distance *e* (the two valves being placed in their mid-positions) will measure ¾ inch.

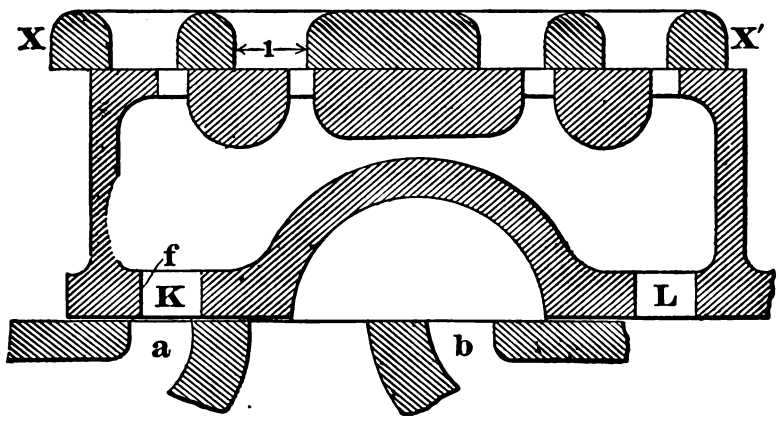

Fig. 2947.

Continuing the construction of the diagram, Fig. 2946, we draw the line G passing from *m* to line B D, and at a right angle to it. Then on line B D measure off from G the distance *e*, Fig. 2948, and draw line *n'* parallel with G, giving at the outer circle the location of the cut-off eccentric, as shown by the line *n n*. The construction is simple enough when we consider that the line B D represents the valve travel full size, and Fig. 2948 the valves one-quarter full size, and that the main eccentric being at *m* (Fig. 2946) we have by lines G *n'* (distant apart equal to four times *e*, or ¾ inch in this example) found a position for the cut-off eccentric *n n*, that would move the cut-off valve ¾ inch, as required.

Suppose, now, that it were required to find the position of the cut-off eccentric when the piston is to have its steam cut off at half stroke, and we draw a circle B D, Fig. 2949, equal in its

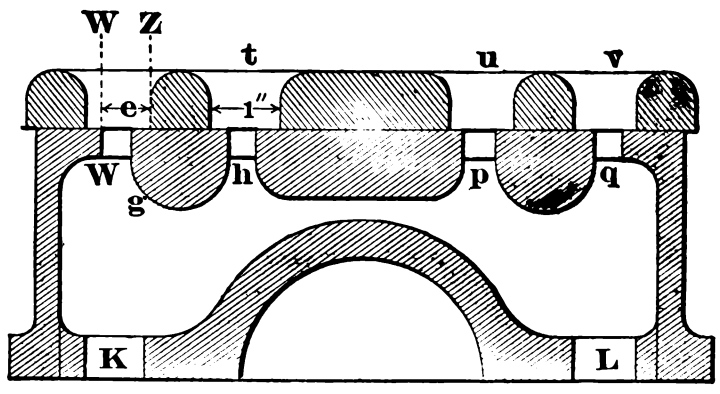

Fig. 2948.

diameter to the stroke of the valve, and a circle *d* whose radius equals the amount of lap on the main valve. We mark point S distant from *d* to the amount of lead the main valve has. With a radius equal to one half the radius of circle B D, we mark from S and from the centre C, the arcs *c*.

A line V drawn through C *c* gives the angular advance of the main eccentric. From *c*, on V, we draw the circle X, and from C, through *e*, where circles *d* and X intersect, we get at H the position of the crank at the time the main would cut off. To find the corresponding position of the main valve we add to 90° the angle V I, whatever it may be (in this case it is 28°, as marked), and get at *m'* (118° from H) the position of the main valve at the time it would cut off the steam independently of the cut-off valve.

We have next to find the position of the cut-off eccentric when

set to cut off at the same point as the main valve, and to do this we draw from m' line G at right angles with B D.

We then take the full distance the edge of the cut-off valve stands from the edge of the main valve (when both valves are in mid-position as denoted by e in Fig. 2948), and mark vertical line n' distant from G to the amount of e, and this gives us the

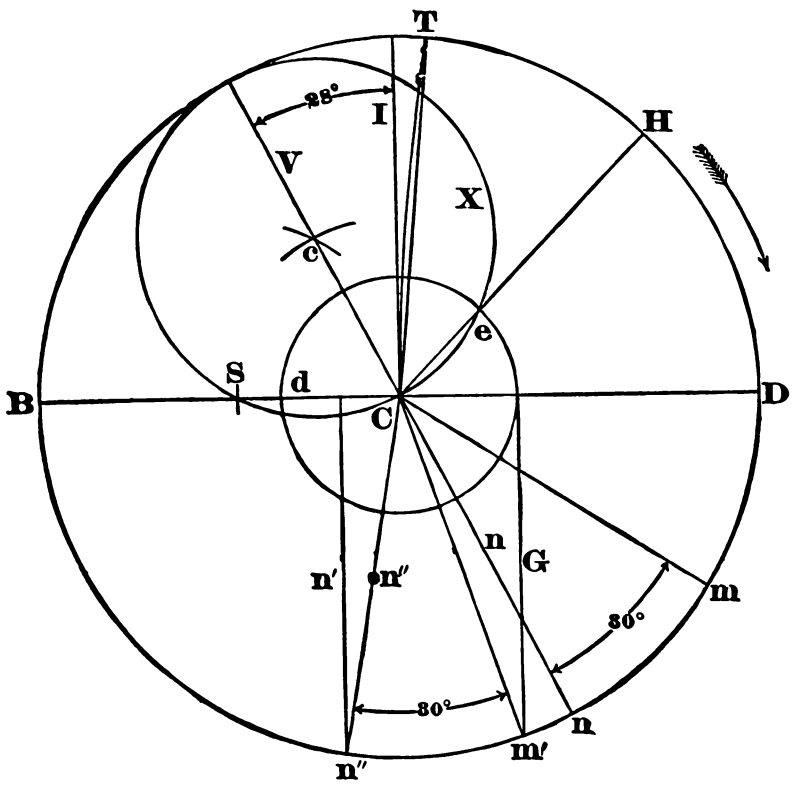

Fig. 2949.

point n'' on the outer circle, and from this we draw the line n'' n'', which is the position of the cut-off valve when the crank is at H and the main valve at m'. Then we mark at T the position of the crank when the piston is at half stroke, and it is clear that, having moved the crank back from H to T, we must move the main and cut-off eccentrics back an equal distance; hence, with compasses

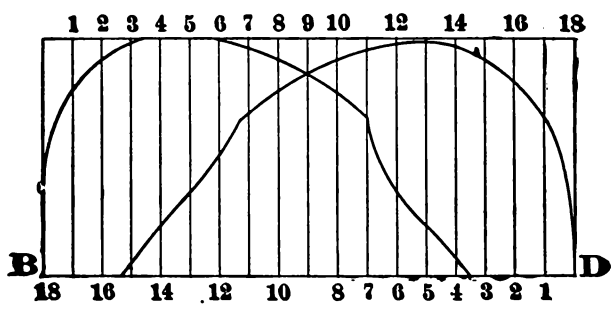

Fig. 2950.

set to radius H T, we mark from m' point m, which gives the position of the main eccentric when the piston is at half stroke, and with the same radius we mark from n'' point n, which is the position of the cut-off eccentric when the piston is at half stroke.

The proof of the construction is that the two eccentrics stand at 30° apart in either case, and the main eccentric is 118° ahead of

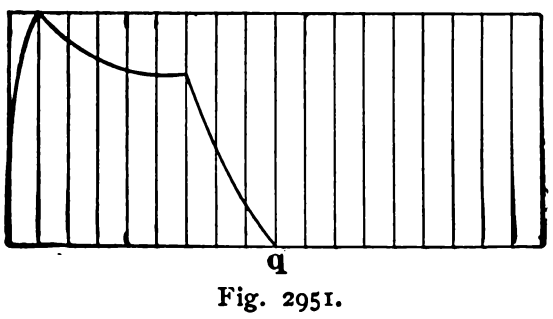

Fig. 2951.

the crank; hence we have merely first found the position of the ports when the main valve cuts off, and then moved them all back together to get their position at another point of cut-off.

Now, suppose the positions of the crank and eccentrics to have been determined by this method, the cut-off valve ports being 1 inch wide, those in the back of the main valve ½ inch wide, the cylinder ports being 1 inch, the main valve having ½ inch steam lap and $\frac{3}{16}$ lead, the travel of both valves being obtained by adding the width of the port to the amount of the steam lap and then multiplying by 2 (this amount of travel being sufficient to let the main valve fully open the steam ports). Suppose, also, the main and cut-off eccentrics to be so set on the shaft that, with the cut-off eccentrics moved as close together as possible, both will cut off the steam at the same point in the stroke; and the crank being at H, Fig. 2949, the main eccentric will be at m' and the cut-off at n'', and the port openings will be as in Fig. 2950, from which it is seen that up to the eleventh inch of piston motion the admission is as free as if no cut-off valve were employed, since the amount of port opening is equal to that given by the main valve. The

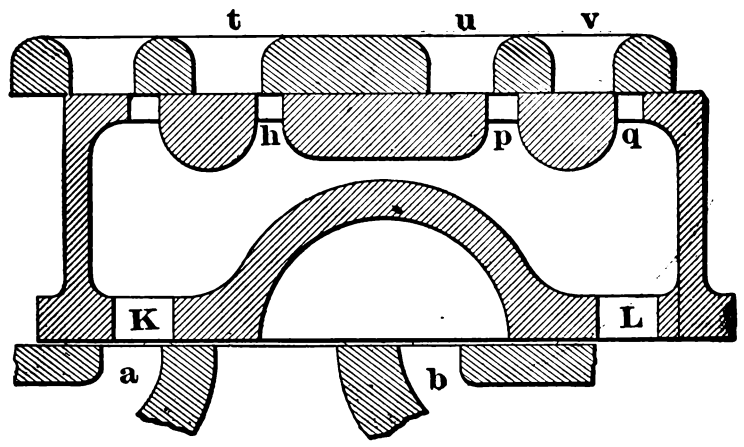

Fig. 2952.

admission is, therefore, more free, and the cut-off more sharp, than in the cases in which the main valve had but one port.

We have now to consider the means by which the valves are to be enabled to cut off at other points in the stroke, and this can, in the case of a single cut-off valve, as in the examples now under consideration, be done by increasing the stroke of the main valve, whereas if two cut-off valves were used on the back of the main valve, the earlier points of cut-off must be effected by means of moving them apart by a screw, such as in Fig. 2899.

Now, suppose that the eccentrics having been set by the construction given in Fig. 2949 (the longest point of cut-off effected by the cut-off valve equalling the point at which the main valve cuts off), and suppose that we increase the main valve travel sufficiently to effect the cut-off at half stroke, and we shall find that the admission will occur as in Fig. 2951, the port closure from the

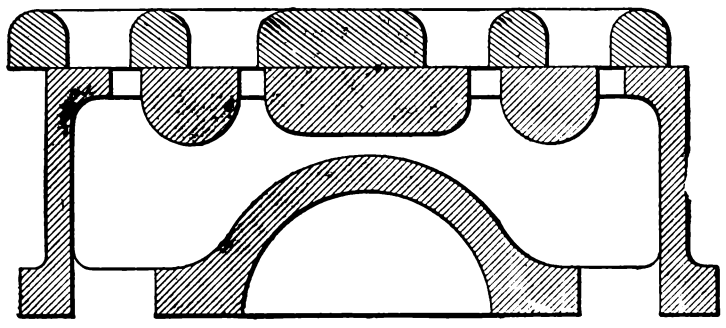

Fig. 2953.

first to the sixth inch of piston motion occurring because the extra travel given to the main valve causes its port edge to partly cover the port a, as in Fig. 2952.

This may obviously, however, be remedied by cutting away the projecting edge of K, which will not affect in any other way the action of the valve. To find the amount the travel of the main valve must be increased to effect the cut-off at some earlier point in the piston stroke, as, say, for example, at half stroke, we proceed as in Fig. 2954, in which the position of the crank when the piston is at half stroke, and the corresponding positions of the main and cut-off eccentrics, are found by the same construction as in Fig. 2949.

Here it will be found, if we place the two valves in their mid-positions, that the amount the *throw* (not the *travel*) of the main eccentric must be increased, in order to change the point of cut-

off from what it was in Fig. 2950 to half piston stroke, will be equal to the distance *e*, Fig. 2948; and as the position of the cut-off eccentric will not be influenced by increasing the main eccentric throw, we draw from *n* a vertical line *n'*, and parallel to

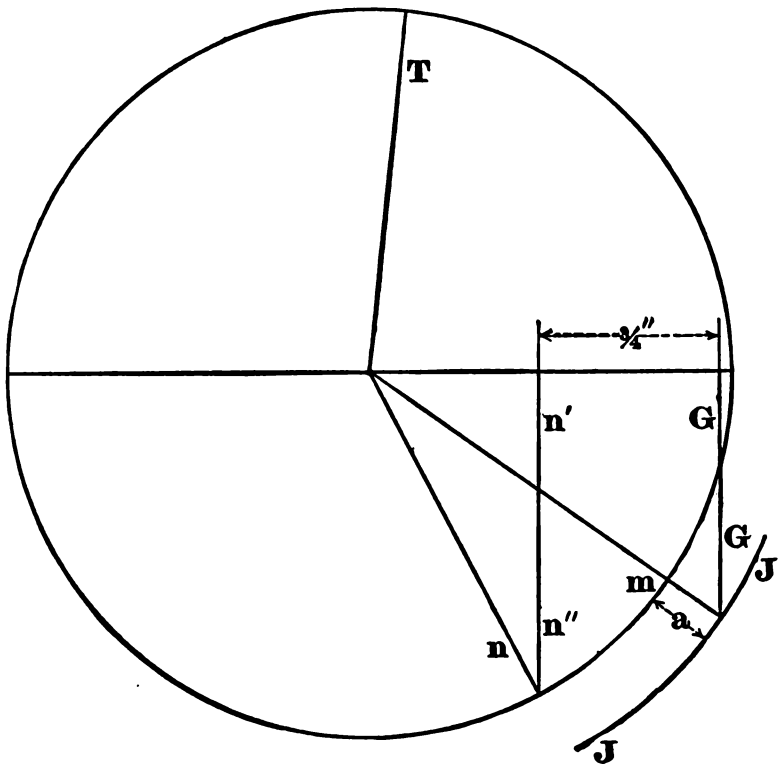

Fig. 2954.

this a second line G distant from *n'* the amount represented by *e* in Fig. 2948 (which, being $\frac{3}{16}$ inch, and the illustration being one-quarter size, makes the distance from *n'* to G become $\frac{3}{4}$ inch); we then draw an arc J J passing through the point where line G

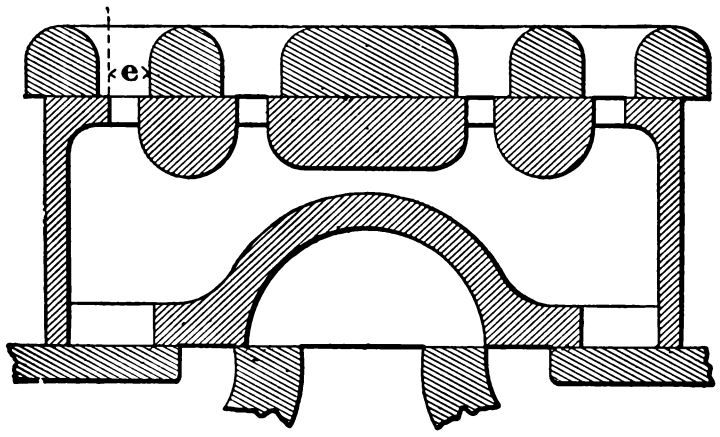

Fig. 2955.

and the main eccentric throw-line intersect, and the distance between the circle and the arc J J or radius *a* is the amount the throw of the eccentric (travel of the main valve) must be increased, in order to effect the cut-off at half piston stroke.

By increasing the throw of the eccentric, we have merely put

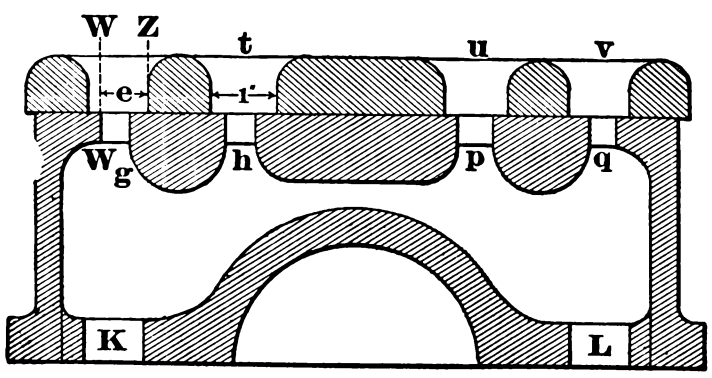

Fig. 2956.

the main valve farther back, as will be understood from Fig. 2955, in which, with both eccentrics having the same throw, the valves would occupy the positions they occupy in the figure; but by increasing the throw from the circle to arc J, Fig. 2954, we have pushed the main valve back, so that the cut-off will be effected.

We have also, by increasing the main valve travel, increased its lead, making it $\frac{1}{4}$ inch instead of $\frac{3}{16}$ as before.

The port openings with the cut-off at half stroke are shown in Fig. 2957, and it is seen that increasing the stroke of the main valve has made the steam port open full at $1\frac{1}{8}$ inches of piston motion for one stroke, and at $1\frac{1}{2}$ inches of piston motion for the other, which is a great advantage; while the ports have remained wide open to $5\frac{1}{2}$ inches of piston motion on one stroke and $6\frac{1}{8}$ inches on the other.

The points of cut-off, also, are very nearly equalized, and it is clear that the steam distribution has been greatly improved, as may be seen on a comparison with previous figures.

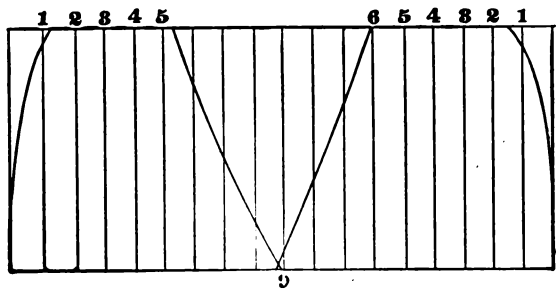

Fig. 2957.

To find the throw of the main eccentric necessary in order to cut off the steam at one-quarter stroke, we find the crank position with the piston at quarter stroke, as in Fig. 2958, and then, by the construction explained with reference to Fig. 2949, find the corresponding position of the main and cut-off eccentrics. We then draw the line *n'*, and from this mark point G distant from *n'*, the amount represented by *e* in Fig. 2956, or in this case, $\frac{3}{4}$ inch. From G we mark the arc J, and the radius *a* is the amount of increased travel above that required for the longest cut-off necessary to cut off at one-quarter of the piston stroke.

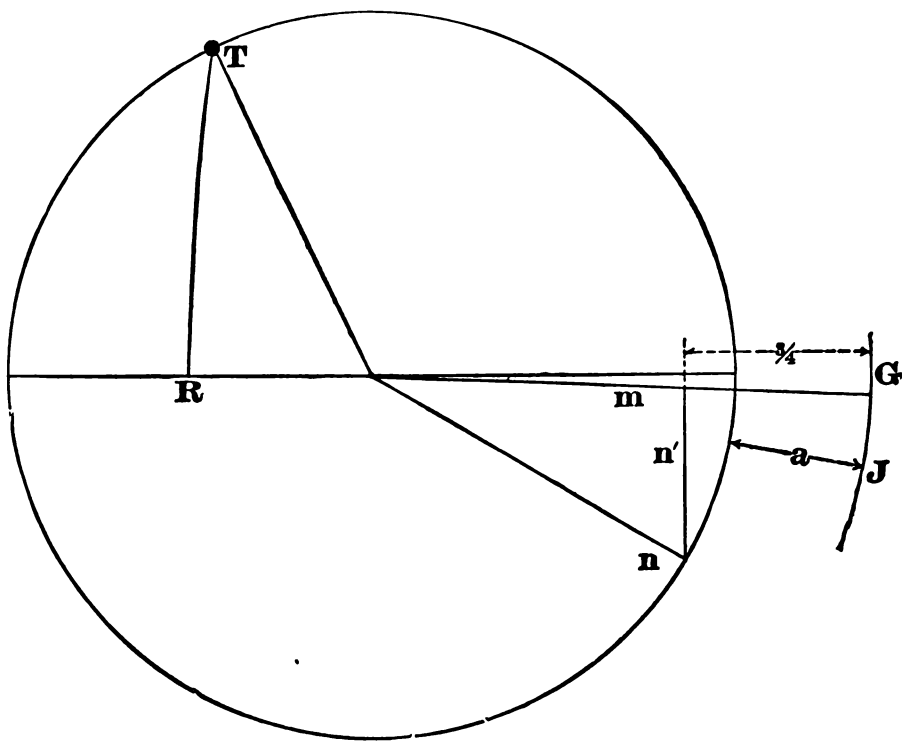

Fig. 2958.

As the radius *a* measures in this case $\frac{9}{16}$ inch, the increase in the valve *travel* is $\frac{9}{8}$, and we have:

	Inches.
Least or normal travel of main valve	3
Travel of main valve to cut off at half stroke . . .	$3\frac{1}{2}$
Travel of main valve to cut off at one-quarter stroke .	$4\frac{1}{8}$

Increasing the main valve travel to $4\frac{1}{8}$ has, however, again increased the lead, making it $\frac{5}{8}$ inch full.

In Fig. 2959, we have the port openings for the cut-off at one-quarter stroke, and it is seen that they are much greater than in Fig. 2937, where a single-ported cut-off was used.

Instead of riding on the back of the main valve, the expansion or cut-off valve may be placed in a separate chamber in the steam chest, as shown in Fig. 2960, the cut-off valve V being in the

chamber *a*, and the main valve in chamber *b* of the steam chest. It is obvious that in this class of valve the steam that surrounds the main valve in the lower compartment *b* of the chest is not affected by the cut-off, and acts to maintain the pressure of the steam in the cylinder after the point of cut-off, hence it is desirable to keep the size of the lower compartment as small as possible, and thus limit its cubical contents.

In this design of valve gear, the longest point of cut-off is obtained by the shortest amount of valve travel, and if the ports in the cut-off valve are of the same width as those in its seat, the

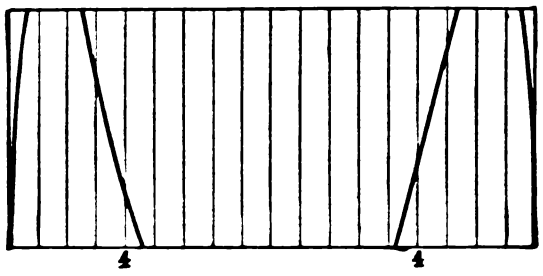

Fig. 2959.

least amount of travel that will effect the cut-off is that equal to twice the width of the ports. The two extreme positions of the valve are shown in Figs. 2961 and 2962, these being the positions at their respective points of cut-off for the two piston strokes, and it is seen that the valve, moving from its position in the upper to that in the lower half of the figure, has travelled a distance equal to twice the width of the port.

The useful range of this form of valve is limited by reason of the extreme amount of wire drawing of the steam that occurs if it is attempted to cut off steam at late points in the piston stroke,

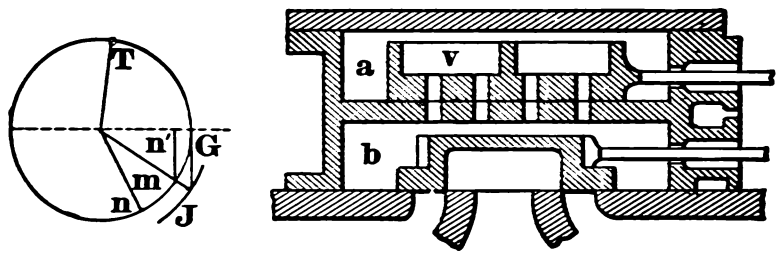

Fig. 2960.

and the design is, therefore, useful for the earlier points of cut-off only, as from quarter to half stroke.

To Find the Limits of the Range of Cut-off.—The longest or latest point of cut-off being given, to find the earliest point at which the valve can effect the cut-off, the amount the valve stroke must be increased, and the position for the cut-off eccentric, we proceed as in Fig. 2963, in which the inner circle B D represents the shortest amount of valve travel (its diameter equalling twice the width of the ports), and T the position of the crank at the latest point of cut-off; S represents a portion of the valve seat containing one port (which is all that is necessary, since the open-

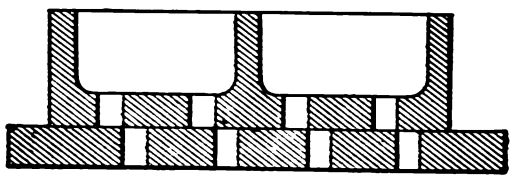

Fig. 2961.

ings at all the ports in the seat will be alike), and V represents a portion of the valve containing one port.

Now, it is clear that the cut-off eccentric must stand as much behind the dead centre B as the crank stands ahead of it when the cut-off occurs; hence we take the radius B T, and from B mark at *n* the position of the cut-off eccentric when the crank is at B, and it follows that while the crank moves from B to T the cut-off eccentric will move from *n* to B, effecting the cut-off when it arrives at B, at which time edge *a* of the valve will be fair with edge *b* of the port.

To find the position of the valve when the crank is at B and the cut-off eccentric at *n*, we mark line *n n'* and take the radius C *n*; with this radius, and from edge *b* of the port, mark edge *d* of the valve, it being clear that edge *d* of the valve must be as far from its mid-position *b* (when the valve is in mid-position, edges *d* and *b* coincide) as *n'* is distant from C. From *d* mark off edge *a* of the valve equal to the width of the port in the seat. We have thus found the positions of the ports for the longest points of cut-off and the shortest valve stroke; from these may be found their positions

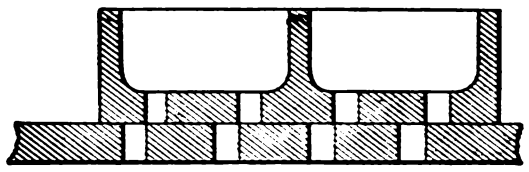

Fig. 2962.

for the shortest point of cut-off and the longest valve stroke, as follows:

The crank being on its dead centre B, the cut-off eccentric at *n*, and the edge of the valve at *d*, when the ports are set in the position necessary for the shortest cut-off, the question is how much we must lengthen the valve stroke in order to enable the valve to cut off as early as possible; and to find this we mark a dotted line *f* distant from edge *e* of the port to the amount the port must be open for the lead when the crank is at B. We then take the

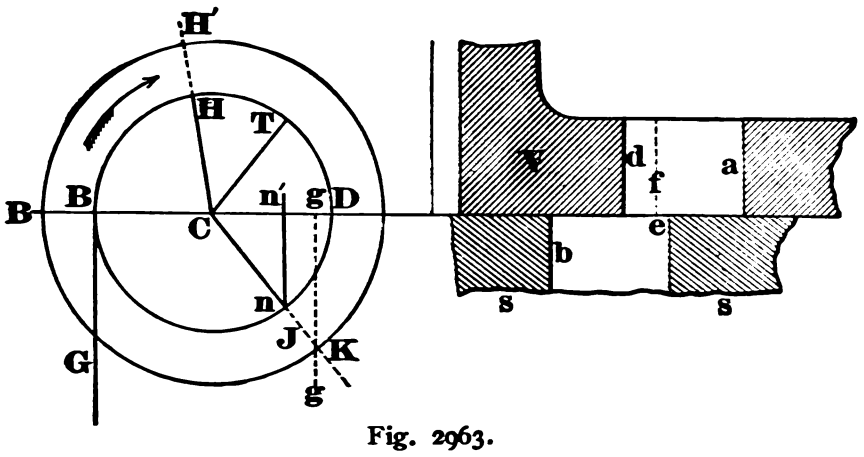

Fig. 2963.

distance *d f*, and mark from *n* the point *g*, and draw line *g g*; we then prolong *n* by a dotted line J cutting *g g* at K, and through K we draw a circle B, representing the path of the cut-off eccentric when set for the shortest point of cut-off. We have thus increased the throw of the eccentric to the amount *n* K, and, by doing so, moved the edge of the valve from *d* to *f*, leaving the port open to the amount *e f*, which is necessary for the lead.

Having found the path of the eccentric for the shortest cut-off, we find the position of the crank at the shortest point of cut-off by taking the arc or radius K G and mark it from B, thus getting at

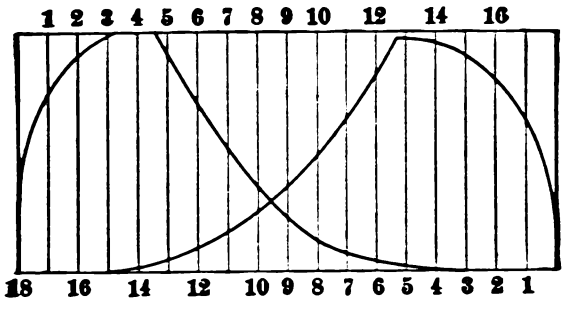

Fig. 2964.

H' the required crank position at the shortest point at which it can cut off and leave the valve open to the amount *e f* of the lead.

In Fig. 2964, we have a diagram of the port openings for the longest, and in Fig. 2965 a diagram of the port openings for the shortest, points of cut-off found by the diagram, Fig. 2963, and it is seen that in the latest points of cut-off the steam is extremely wire drawn, which occurs because as the cut-off eccentric approaches the point B, it necessarily moves the valve very slowly; scarcely moving it at all during the 2 inches of piston motion previous to the final point of cut-off.

We may, to a certain extent, improve the admission, and prevent the wire drawing, by making the cut-off valve ports wider than the port in its seat, and setting the cut-off eccentric to correspond. Thus, in Fig. 2966, the cut-off valve ports are 1 inch wide and the seat ports are ½ inch wide. The least amount of cut-off valve stroke is, therefore, 1½ inches, or the width of the port in the valve added to the width of port in the seat.

The circle B D represents the least amount of valve stroke, and T the crank at the longest point of cut-off. We mark n (as far behind B as T is ahead of B), and thus get the position of the cut-off eccentric when the crank is at B. To find the corresponding position of the valve, we take the radius from the point D to n',

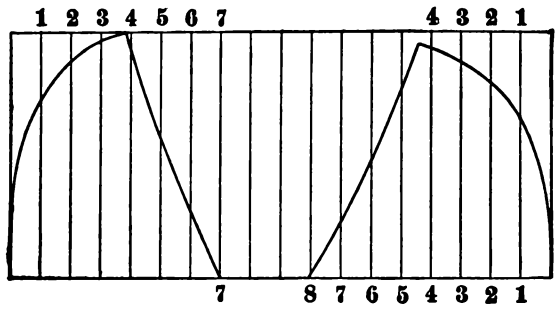

Fig. 2965.

and with this radius mark from e the edge d of the valve, it being obvious that when the cut-off eccentric was at D, edge d of the valve was at e and at one point of cut-off; hence, while the cut-off eccentric moved from D to n' (or, what is the same thing, to n, since n' shows the amount of linear motion caused by the eccentric in moving D to n) the valve edge d moved from e to its position in the figure. Now, it is clear that in lengthening the cut-off eccentric throw from n toward K, we move the valve edge d back toward e, and the utmost we can do this, and still leave the port open for the lead, is the radius df; hence, we mark f distant from

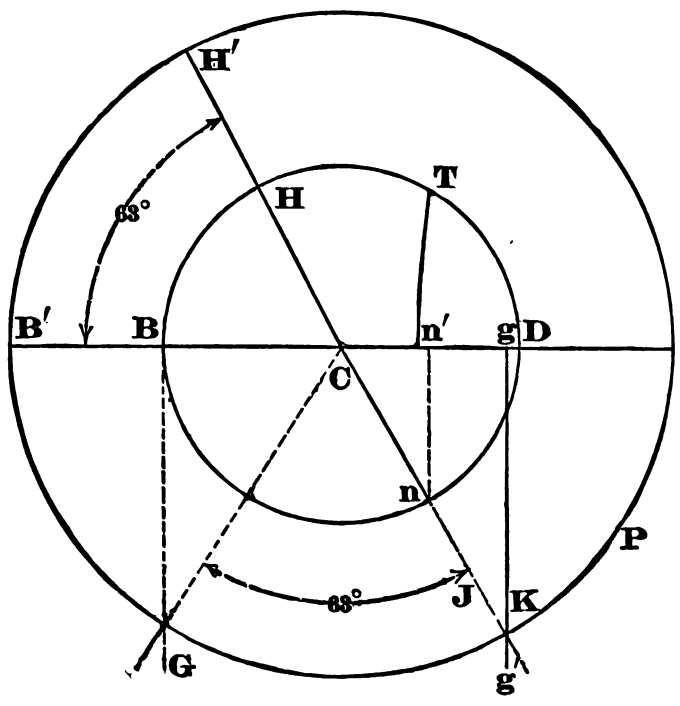

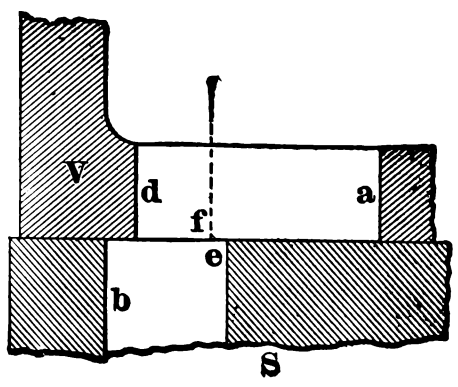

Fig. 2966.

e to the amount of lead the valve is to have, and taking radius df we mark from n' the point g, which gives the amount we can push the valve back to lengthen its travel while still leaving it the amount ef of lead. From g we draw the line gg', and then prolong the eccentric throw-line by a dotted line J, and through the intersection at K of J and g', we mark circle P, which represents the path of the centre of the eccentric when its throw is increased for the shortest point of cut-off. To find the crank position at the shortest point of cut-off, mark line B G at a right angle to B D, and take the arc K G (in this case 63°); and from B' mark H', which is the crank position at the shortest point of cut-off, the crank throw-line being at H' H. For the longest point of cut-off the valve will effect, we have, then, the piston at its dead centre B and the cut-off eccentric at n; while for the shortest point of cut-off we have the crank on its dead centre B', the cut-off eccentric at K, and the edge d of the valve at e open for the lead. Having set the parts by this construction, it will be found that although the wire drawing is less than in Fig. 2964, it is still inadmissibly great during six inches previous to the point of cut-off.

THE MOST ECONOMICAL AMOUNT OF COMPRESSION.*—In Fig. 2967, let $A\ B\ C\ D$ be an indicator card without any compression, and let it be required to cut off the corner at D by such a degree of compression as will effect the greatest saving of steam.

Draw in the expansion curve $B\ C$, supposed to agree through a sufficient part of its length with a common hyperbola to the point E, where it cuts the back pressure line produced. Find the area

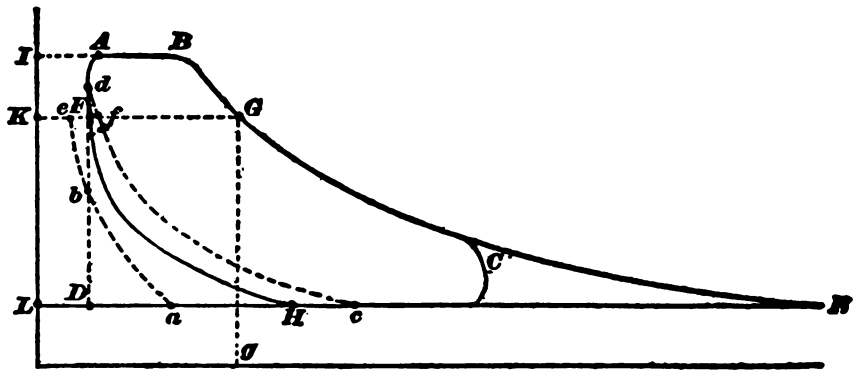

Fig. 2967.

added between C and E by any method, and draw a line $F\ G$, cutting off from the top of the card an equal area $A\ B\ G\ F$. A hyperbola compression line $F\ H$, drawn through F, is the line desired.

Proof: Draw two auxiliary hyperbolas, $c\ d$ and $a\ e$, near the hyperbola $F\ H$, and consider the areas $K\ G\ E\ L$, etc., in relation to the lines $E\ L$, etc. We shall then have $KGEL : FGEH : KFHL : eFHa : FfcH = EL : EH : HL : Ha : cH$, and, if we suppose these areas and lines to be measured by suitable scales, the areas will represent quantities of work, and the lines the weight of steam performing that work. Also

$$\frac{FGEH}{EH} = \frac{ABCHF}{EH} = \frac{KGEL}{EL} = \frac{KFHL}{HL}$$
$$= \frac{eFHa}{Ha} = \frac{FfcH}{cH} = U;$$

the work done per pound of steam for the card $A\ B\ C\ H\ F$ or $F\ G\ E\ H$.

It remains now to show that the cards $A\ B\ C\ c\ d$ and $A\ B\ c\ a\ b$ are less economical, and this appears as follows:

Let $\frac{A\ B\ C\ c\ d}{E\ c} = v =$ work per pound of the first card; we are to show that $v < U$.

* By J. Burkitt Webb.

From the above equations we have

$$\frac{ABCHF - FfcH}{EH - cH} = U, \text{ whereas}$$

$$\frac{ABCHF - FfcH - Ffd}{EH - CH} = v,$$

therefore, $v < U$.

Again, let $\frac{ABCab}{Ea} = u$, to show that $u < U$.

The equations give $\frac{ABCHF + eFHa}{EH + Ha} = U$, whereas

$$\frac{ABCHF + eFHa - Feb}{EH + Ha} = u, \text{ therefore, } u < U.$$

Consequently, the most economical compression line is FH.

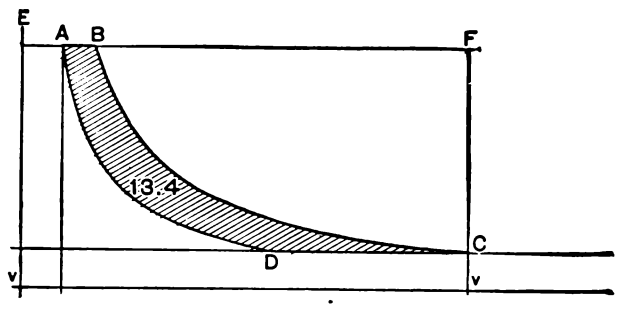

Fig. 2968.

When steam is expanded to back pressure, as in the card $FGEH$, the compression should just fill the clearance, and authors generally agree with this. In such a card, however, any greater compression, as along cf (giving the card $fGEc$), is equally economical, though it reduces the capacity of the engine.

COTTERILL'S EXPRESSION.—"Greatest work $= PV$, log eR," follows directly from the above, because the greatest work $= V = \frac{KGEL}{EL}$; thus $PV = Gg \times KG$, and $R = \frac{EL}{GK}$; consequently, $KGEL = PV \log eR$, in which, if we take V as the volume of one pound of steam, EL becomes unity, and the two expressions identical.

In this method of treating the question, the corners of the card at A B and D may be rounded, as in an actual card, without affecting the accuracy of the results, provided only that the points EGH are not interfered with, GE being a hyperbola and HE a horizontal line. Between F and G (*via* A and B) and between G and H (*via* C), the card, then, can have any shape, and we have only to make the actual card areas

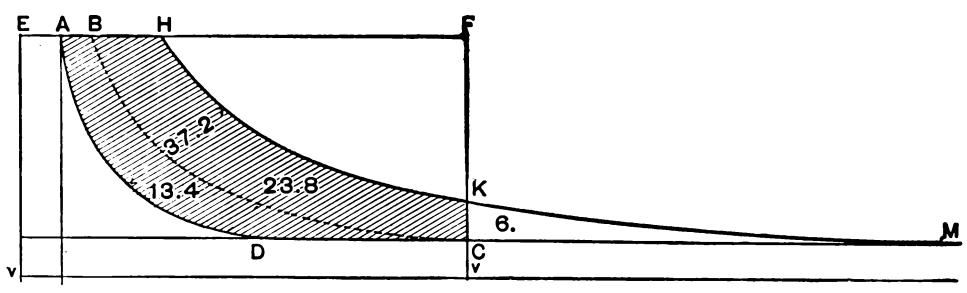

Fig. 2969.

$$ABGFA = GEHCG.$$

By throttling the steam and increasing the stroke, we may reduce the pressure and change the card $ABCHF$ into $FGEH$ with no theoretical loss of economy.

COMPRESSION AS A FACTOR IN STEAM-ENGINE ECONOMY.*—This paper is intended, first, to attack the theory that the most economical compression curve is one which fills the clearance space to initial pressure; second, to point out certain relations which the writer thinks should exist between the expansion curve and the compression curve, so that for any given point of cut-off the point of exhaust closure corresponding in efficiency may be known by inference.

Let Figs. 2968, 2969, and 2970, represent theoretical diagrams, produced by Mariotte's law, which is considered sufficiently accurate in this case, as the diagrams will not be used for accurate measurements, but simply to illustrate a theory.

Let these diagrams be supposed to have been produced by an engine with ten per cent. clearance, represented by the distance from A to E, and the vacuum line being V V.

In the diagram represented by Fig. 2968, cut-off takes place at about $\frac{1}{15}$ stroke, and expansion is carried to the atmospheric line or the line of back pressure, thus preventing any waste by free expansion when exhaust takes place. Compression is also made to just fill the clearance space to boiler pressure, leaving no waste room to be filled from the boiler.

Disregarding engine friction, and considering only the work indicated in the cylinder, this diagram would correspond to the highest efficiency of this engine if there were no loss by cylinder condensation. But it is well known that a considerably later cut-off than $\frac{1}{15}$ stroke is more economical, notwithstanding the consequent waste by free expansion at exhaust, and the reason must be found in the fact that cylinder condensation is so nearly a fixed amount per stroke, that by increasing the power developed at each stroke the loss becomes relatively smaller.

Referring to Fig. 2969, suppose the diagram $AHKCD$ to have been produced by the same engine, cutting off at $\frac{1}{4}$ stroke, which for the purpose of illustration will be assumed to be the most economical point of cut-off, although the logic of what is to follow would apply equally well to any other point of cut-off.

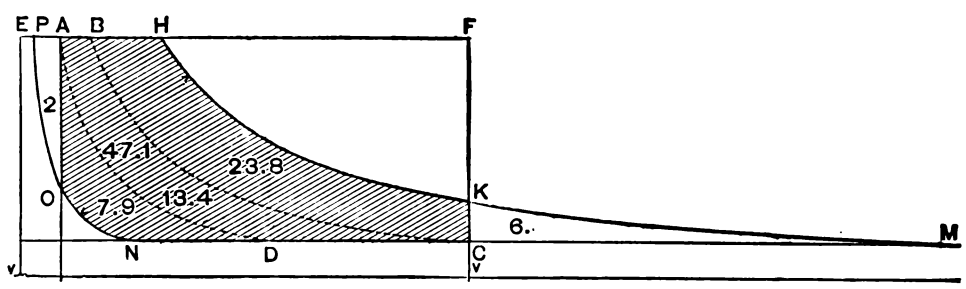

Fig. 2970.

Comparing this diagram with Fig. 2968, we find that by the later cut-off the mean effective pressure has been increased from 13.4 lbs. at $\frac{1}{15}$ cut-off to 37.2 lbs. at $\frac{1}{4}$ cut-off, and the power thereby developed being nearly three times as great; the loss per horse-power by cylinder condensation has been greatly reduced, notwithstanding the considerable waste at exhaust due to throwing away steam only partially expanded.

Now, if it be true that starting with the theoretically perfect diagram $ABCD$, it is economy to increase its area along the expansion curve up to a point where a considerable waste by free expansion occurs at exhaust, it must follow that it will be economy to add something to the area of the diagram along the compression curve also, and if B is not the most economical point of cut-off, it may be safely assumed that the point of exhaust closure D is equally faulty.

As before stated, one of the objects of this paper is to point out what seems to the writer a logical method of determining the compression curve which shall correspond in economy of steam with any given expansion curve.

Referring again to Fig. 2969, suppose the expansion curve be continued from K to M, where it intersects the atmospheric line.*

* From a paper read before the "American Society of Mechanical Engineers" by Frank M. Ball, New York City.

* The diagram under consideration being a theoretic diagram, no distinction is made between the atmospheric line and the line of back pressure. With actual diagrams, whether exhausting into atmosphere or into vacuum, the continuation of the back pressure line parallel to V V should be substituted for the atmospheric line, both in the construction of the theoretically perfect diagram $ABCD$ and also in locating the point M.

The useful work added to the diagram *A B C D* by changing the point of cut-off from *B* to *H* is represented by the area of the diagram *H K C B*, amounting to 23.8 lbs. M.E.P., and the work thrown away by free expansion at exhaust is represented by the area of diagram *K M C*, which measures 6 lbs. M.E.P.

With points of cut-off later than *H*, the curve *K M* increases

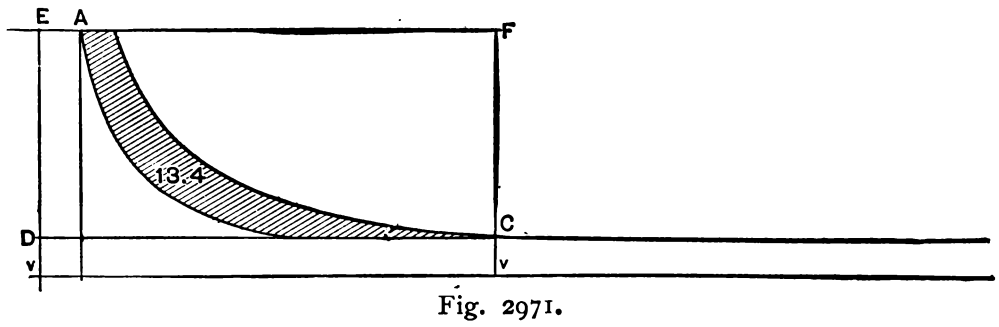

Fig. 2971.

rapidly in length by the removal of *M* along the atmospheric line, and the curve *H K* shortens by approaching the angle *F*, so that the area of the diagram of waste *K M C* increases very rapidly compared with the increase of the useful diagram *B H K C*.

The writer believes that what is true in regard to the expansion curve is equally true of the compression curve.

Referring to Fig. 2970, if, instead of the compression curve *D A*, the curve *N O* be substituted, the total area of effective diagram *A H K C D* will have been increased by the area of *A D N O*, equal to 7.9 lbs. M.E.P., so that the original diagram *A B C D*, with a M.E.P. of 13.4, has been increased by 23.8 lbs. M.E.P. along the expansion curve, and 7.9 M.E.P. along the compression curve.

The waste occasioned by the small compression *N O* is due to free expansion of the steam from the boiler in entering the clearance space, and is measured by the area of diagram *P A O*, because the steam shut in by exhaust closure at *N* and compressed to *O* would, if compressed to boiler pressure, fill the clearance space only from *E* to *P*, and the space from *P* to *A* must be filled from the boiler.

Suppose this to have been done, and the admission valve to be

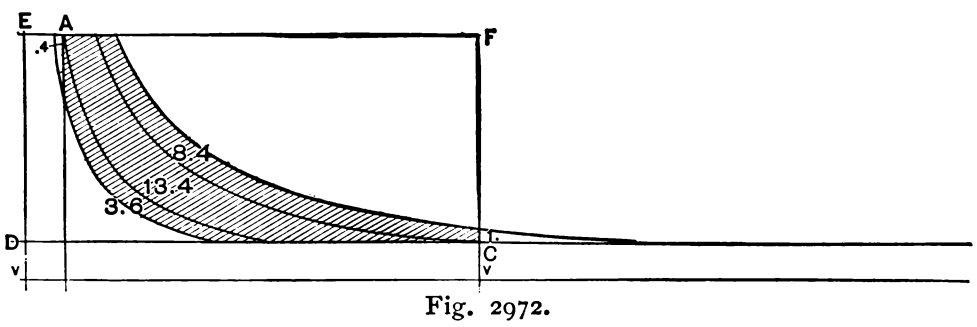

Fig. 2972.

closed at *A*. As the piston advances, *A D* will be the expansion curve, and with *N O P* will form the diagram *A D N O P*.

Of this diagram, the area of *A D N O* is useful work on the piston, and *P A O* is free expansion in the clearance space.

The area of this diagram *P A O* bears about the same relation to the useful diagram *A D N O* that the diagram of waste *K M C* bears to *B H K C*, and hence it is not unreasonable to suppose that if the most economical point of cut-off is at *H*, the curve *N O* will correspond to the highest economy of the engine, or at least will correspond to the efficiency of cutting off at *H*, because in both cases the useful work added along the respective curves is attended with about the same proportionate loss by free expansion.

Carefully conducted tests might develop the necessity of some slight modification of this theory, but in the absence of such data the writer will venture to suggest, in accordance with the foregoing, a general law for approximating the point of exhaust closure which shall correspond in economy of steam with any given point of cut-off.

This law may be stated as follows:

If, in a given diagram, any free expansion takes place at the terminal pressure, then compression should not rise to initial pressure, but the compression curve should be removed from the curve of full compression * a sufficient distance, so that the useful work thereby added to the diagram shall be accompanied with the same proportionate loss by free expansion that is found to accompany the work that has been added to the full expansion curve.†

In applying this law to the study of actual diagrams, first construct the full expansion curve, as *B C*, Fig. 2968. This is best done by tracing it backward from *C*. Next construct the full compression curve, as *D A*, beginning for convenience at *A*. This will give the theoretically perfect diagram *A B C D* located with proper relation to the actual diagram for the purpose of comparison. Next continue the line of back pressure parallel to *V V* a sufficient distance to intersect the continuation of the actual expansion curve, as from *K* to *M*, Fig. 2970.

Having done this, the diagrams *B H K C B* and *K M C* may each be measured and the ratio of their respective areas determined. The compression curve *N O P* must then be so located that this ratio will apply to the respective areas of *A D N O* and *P A O*. With this compression curve *N O* located as described, we are ready to make comparison with the actual compression curve of the diagram under consideration.

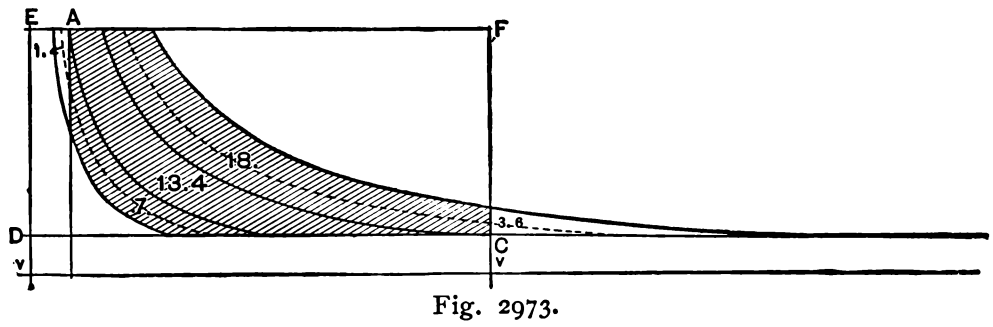

Fig. 2973.

In accordance with this law, it might also be said that whenever the area of any diagram exceeds the area of the theoretically perfect diagram *A B C D*, Fig. 2968, then this excess of area should be found distributed along the expansion and compression curves in the proportions indicated by this law, and it necessarily follows that a fixed compression will therefore not give as high economy of steam under varying loads as a varying compression, and that the highest economy might be expected when both the point of cut-off and of exhaust closure vary in such a manner that the relation of the areas added along the expansion and compression curves of *A B C D* shall at all times conform to this law.

To further illustrate this subject, a series of five theoretic diagrams, Figs. 2971 to 2975, are herewith submitted, in which various points of cut-off are selected between $\frac{1}{15}$ and $\frac{1}{3}$ stroke, and compression curves corresponding to such expansion curves are shown.

From measurement of these diagrams various curves are constructed on a chart shown in Fig. 2976.

Referring to this series of diagrams, the distance from *A* to *F* in each is made to represent the piston travel, and *A E* the

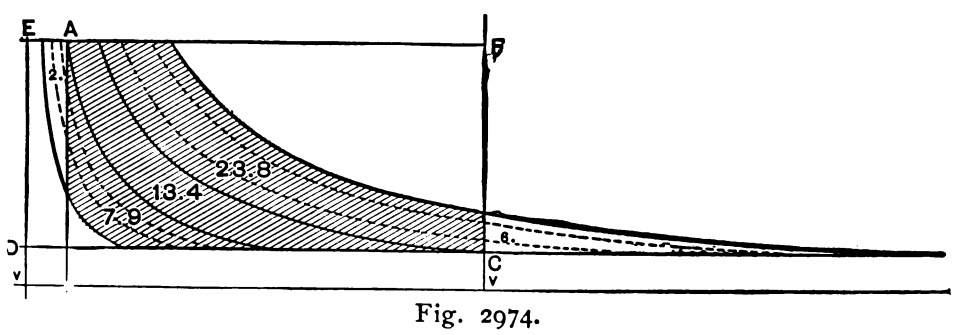

Fig. 2974.

* "Full compression" is here used to describe the curve which just reaches initial pressure within the vertical lines representing the piston travel, as *D A*, Fig. 2968.

† The term "full expansion curve" is used to describe a continuous expansion curve, terminating on the line of back pressure within the limits of piston travel, as *B C*, Fig. 2968.

clearance. The atmospheric line is CD and the vacuum $V\,V$.

In each of the diagrams of the series, except Fig. 2971, a loss by free expansion occurs; and all, including Fig. 2971, are accompanied by a loss due to cylinder condensation, which does not appear in the diagram.

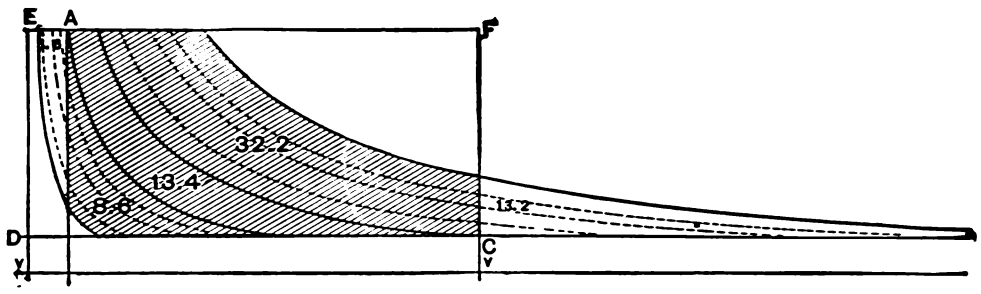

Fig. 2975.

This cylinder condensation is the difference between the steam accounted for by the indicator and that actually used by the engine, and may be expressed in pounds of feed water or steam, or in area of diagram, or mean effective pressure. The latter method will be adopted in this investigation.

Thus, in Fig. 2971, with a M.E.P. of 13.4 lbs., if the indicator only accounts for $\frac{4}{5}$ of the steam, the cylinder condensation may be expressed in pounds M.E.P. by $\frac{13.4}{4} = 3.35$ M.E.P.

With this method of measurement, the whole area of the diagram must be used to express the steam accounted for by the indicator, and if it extends beyond the limit of piston travel, as in Figs. 2972 to 2975, it must be reduced to M.E.P. for the piston travel. Thus, in Fig. 2972, the M.E.P. of the useful diagram is $8.4 + 13.4 + 3.6 = 25.4$, and the diagram of free expansion or waste, $.4 + 1 = 1.4$ M.E.P.

The total M.E.P. which may be used as representing the steam accounted for by the indicator is, therefore, $25.4 + 1.4 = 26.8$.

In all these diagrams, the areas enclosed by heavy lines are indicated by figures which express the pounds M.E.P. in each case. With the series thus arranged, any desired combination of the expansion and compression curves may be made.

Two such combinations are used in constructing the curves of Fig. 2976; one where the compression curve of Fig. 2971 remains constant through the series, and the other where the compression curve progresses through the whole series in harmony with the law that has been heretofore suggested. Fig. 2976 represents the curves of efficiency produced by these two combinations under the following conditions:

(1) The curves $A\,B$ and $A\,C$ assume that the loss by cylinder condensation is directly in proportion to the M.E.P. of the diagram, and is $\frac{1}{5}$ of the total steam in every case.

(2) $D\,E$ and $D\,C$ assume that the cylinder condensation is a constant quantity equal in amount to $\frac{1}{5}$ of the total steam used at $\frac{1}{4}$ cut-off.

(3) $F\,B$ and $F\,H$ assume the same cylinder condensation as in the latter case, and the curves show the net efficiency of the engine where the loss by friction is also a constant quantity equal to 8 per cent. of the capacity of the engine at $\frac{1}{4}$ cut-off.

Each diagram of the series is used to establish one point on each of the curves of Fig. 2976.

Thus A on Fig. 2976 is established from Fig. 2971 as follows:

M.E.P. = 13.4 and is measured on abscissa.

Cylinder condensation being assumed to be $\frac{1}{5}$ the total steam, as stated, then the useful work in M.E.P. of diagram is only $\frac{4}{5}$ or 80 per cent. of the theoretic work, and is measured on ordinates.

The next point in curve $A\,B$ is obtained from Fig. 2972, as follows:

Total M.E.P. of diagram Fig. 2972 $= 8.4 + 13.4 + 3.6 + .4 + 1 = 26.8$ M.E.P.

Condensation is $\frac{1}{4} \times 26.8$ M.E.P. $= 6.7$ M.E.P.

Total steam used expressed in M.E.P. as follows:

$$\left.\begin{array}{l}\text{Accounted for by the indicator, } 26.8\\ \text{Cylinder condensation, } 6.7\end{array}\right\} = 33.5$$

M.E.P. of useful diagram, $8.4 + 13.4 + 3.6 = 25.4$.

Efficiency, $\frac{25.4}{33.5} = 75.8$ per cent.

The second point in curve $A\,B$ is, therefore, 25.4 M.E.P. and 75.8 efficiency. The points on curve $A\,C$ are obtained in the same manner, but in every case the compression curve of Fig. 2971 is used, and no measurements beyond that curve are included.

The curves from D and F are produced in a similar manner, except that the loss by condensation in the first, and condensation and friction in the last, are assumed to be a constant quantity, as already stated.

Whatever may be the truth as to the loss by cylinder condensation, it is evident that the best result under any circumstances is with the variable compression, as the upper curve of each pair is obtained in that way, while the lower curve is produced by constant compression. It will be found, also, that any compression curve which does not conform to the law under which these were made, will produce a curve of lower efficiency than the upper one of each pair in Fig. 2976.

The condensation assumed by the curves from A, Fig. 2976, is evidently far from the truth, as it shows the highest efficiency of the engine at the earliest point of cut-off.

These curves from A have been constructed to show that even with this extreme and impossible condition the varying compression shows even a greater gain than with the condensation which probably exists in practice. The point D is probably a little too low, as cylinder condensation is not probably a constant quantity, and the true curve would, therefore, begin a little above D.

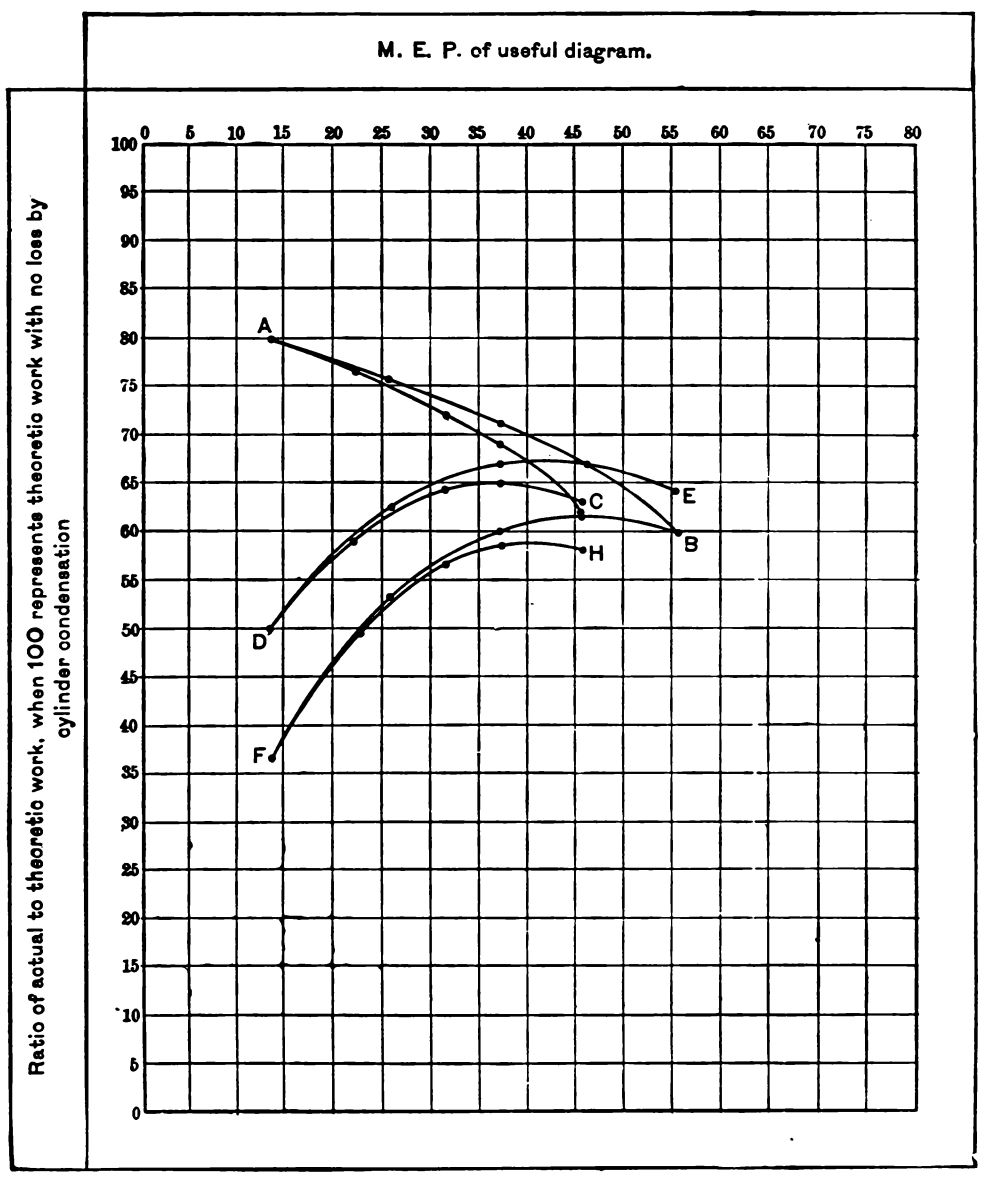

Fig. 2976.

Following the curve *D E*, it will be seen that the highest efficiency is between 40 and 45 lbs. M.E.P., while with the fixed compression of *D C* the best result is between 35 and 40 lbs. M.E.P., and the difference at 40 lbs. M.E.P. is about 3 per cent. of 65, or nearly 5 per cent. of the work done.

The curves from *F* show the wastefulness of light loads when the net work is measured as delivered to the belt, and it also shows the highest efficiency to be with nearly 5 lbs. higher M.E.P. than when the indicated power only is considered.

The study of diagrams by this method of measuring the waste occasioned by free expansion suggests a possible application of the same method to diagrams from compound engines, both in regard to comparisons in each cylinder between the expansion and compression curves, and also comparisons between the various cylinders as to *all* free expansion losses.

This is, however, foreign to the subject of this paper, and will be left for another paper, which the writer hopes to present at the next meeting of this Society.

DISCUSSION.

Mr. A. K. Mansfield.—It may be of interest to call attention here to a rough investigation which I have made as to the relation of clearance and compression to economy in a compound engine, under conditions very often met with in practice.

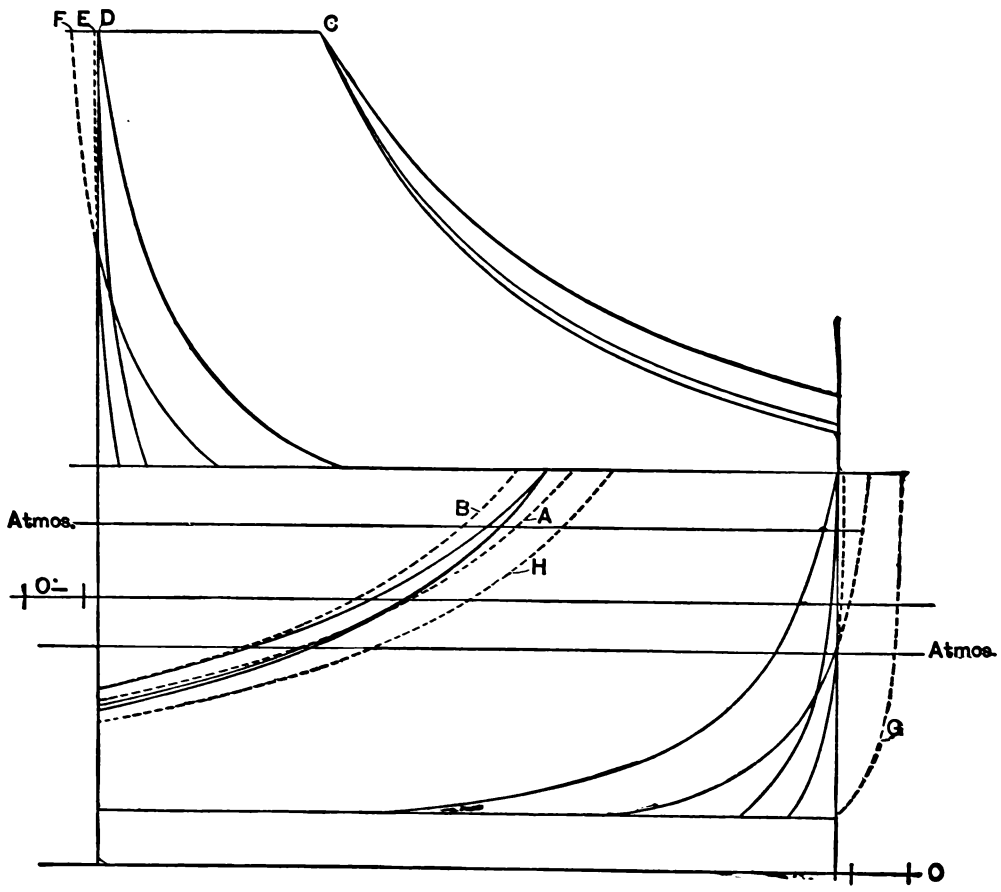

Fig. 2977.

The figure herewith (Fig. 2977) was reproduced from a diagram drawn as large as could conveniently be measured with a planimeter. Accuracy was sought in laying out the lines and taking the areas. The upper portion of the diagram represents various high-pressure cards, the initial pressure of all being 110 lbs. above atmosphere, and cut-off, three-tenths. The lower portion represents corresponding low-pressure cards, the back pressure being taken at 11 lbs. below atmosphere, and the receiver pressure such that the work in cylinders is approximately the same. The ratio of cylinders is taken at three to one, and the point of cut-off in the low-pressure cylinder is found from the consideration that the volume of fluid present, times the pressure, is the same as at cut-off in the high-pressure cylinder. The measure of this volume is the horizontal line from point of cut-off to the corresponding compression line, whether this line falls within or outside the card. The lower cards are drawn to three times the vertical scale of the upper.

First, three sets of expansion and compression curves were drawn, corresponding to no clearance, 2 per cent. clearance, and 10 per cent. clearance, compression in each case extending to initial pressure. Corresponding areas of the two cards were then added together, and their sums found to be to each other as 100 to 97.8 to 90.1, indicating that under the conditions named, the efficiency of the steam is about 20 per cent. less with 2 per cent. clearance in each cylinder than with no clearance, and about 10 per cent. less with 10 per cent. clearance in each cylinder than with no clearance; also, that about 8 per cent. efficiency is lost in increasing clearance in each cylinder from 2 per cent. to 10 per cent.

Next, compression curves were drawn as shown, corresponding to one-half as great compression as before. In the upper diagram, the same expansion lines are used in taking areas as before; but in the lower diagram, new expansion lines *A* and *B* are drawn from points of cut-off determined as before stated, it being borne in mind that the volume of steam admitted to the high-pressure cylinder is now measured, in case of 2 per cent. clearance, by the line *C E*; and in case of 10 per cent., by the line *C F*. Adding the areas corresponding to 2 per cent. and 10 per cent. clearance as before, and reducing the sums in the ratios of *C D* to *C E*, and *C D* to *C F*, respectively, it is found that the efficiency of the fluid remains practically the same as before. No difference worth considering results.

This seems to show that under the conditions assumed we have no reason to expect greater economy to result from a high degree of compression than from a low degree, thus confirming, to some extent, the theory of Mr. Ball.

As a matter of further interest, it was assumed that the fluid was compressed to initial pressure in the high-pressure cylinder of 10 per cent. clearance, and that no compression took place in the low pressure, but that the exhaust valve closed exactly at the end of the stroke, a condition not impracticable in a tandem construction. The corresponding compression and expansion curves were then drawn and the efficiency of the fluid determined as before. It was found to be represented by the figure 92.7, which, compared with the former figure 90.1, indicates a possible gain of nearly 3 per cent. in favor of "cushioning" entirely in the high-pressure cylinder, both cylinders having 10 per cent. clearance. Further, by combining the card of the high-pressure cylinder having 2 per cent. clearance with that of the low-pressure cylinder having 10 per cent. clearance, and *vice versa*, it was found that about 2 per cent. greater efficiency is obtained by the former than by the latter arrangement; that is, it seems to be somewhat less objectionable to have larger clearance in the low-pressure cylinder than in the high pressure.

Professor D. S. Jacobus.—We have one of Mr. Ball's engines erected at the Stevens Institute, and we intend to go into this matter and test it by actual experiment. There are already several theories in regard to the best point at which to start the compression, and the only way to settle which of these is correct is by actual experiment, because any theory which handles the problem correctly has to include the effect of cylinder condensation; and the moment we include this, we have to make an experiment. It is, therefore, just as easy, and more exact, to determine experimentally where the compression curve shall be placed for the best efficiency, as to determine the cylinder condensation for various points of cut-off, and then calculate the position of the compression curve. Mr. Ball is now constructing special valves and expansion plates, whereby the compression curve can be altered for a given point of cut-off in the engine now at the institute, and after that is done we are going to make thorough experiments and determine how well his theory applies.

Professor John H. Barr.—This is a subject upon which I did some work about two years ago, and I concluded, from what I saw at that time, there were some points concerning compression which had not been commonly recognized. I must confess, however, that I cannot quite see the logic from the paper before us of the double-acting law. I shall not attempt at this time to discuss the paper fully, but there is one point that occurred to me in my

brief examination of the subject, which I would like to mention. It is a consideration of the mechanical effect alone.

Now, suppose the engine is running at the cut-off to give the maximum efficiency. It is necessary to have this cut-off vary to meet changes in load and steam pressure. Here is the point on which I wish to speak. If we close the exhaust at the point *b*, Fig. 2978, we do so at the expense of an amount of indicated work represented by *a b c*. If we close the exhaust at *d*, compressing up to the point *e*, we gain an amount of indicated work equal to *a b d e* over the preceding case. This is at a loss, as Mr. Ball shows us, of *f e a*. With exhaust closure at *g*, compressing up to *h*, we see that the total gain of indicated work is *a b g h*, and the loss is *a h i*. As the exhaust closure occurs later in the stroke, the indicated work is increased; but the clearance loss is increased also. It will be seen that the increment of gain in indicated work *e d g h*, due to changing the exhaust closure from *d* to *g*, decreases relative to the corresponding increment of clearance loss *e f i h*, as exhaust closure occurs later in the stroke.

There is, evidently, a point at which the increment of gain in indicated work equals the increment of clearance loss, and it would seem that, *mechanically*, this is the point at which to fix exhaust closure. This is but one element in the problem; and as it neglects the important effect of compression upon cylinder condensation, it is not offered as a solution of the problem.

Professor Jacobus.—I would like to ask Professor Barr whether the point at which economical compression should begin, according to his reasoning, depends upon the point of cut-off.

Professor Barr.—In this consideration it does not. It depends simply upon the back pressure and clearance.

Professor Jacobus.—Then the solution is not complete, because the point at which the compression should begin varies for different points of cut-off.

Mr. E. T. Sederholm.—I would like to call attention to one thing, and that is, that in compressing to this extent, while we theoretically lose this amount of work, actually we do not lose nearly so much, because in compressing to any extent we necessarily reduce the friction of the engine. The momentum of all the reciprocating parts has to be used up in some way, either by pressure on the journals, or by a steam cushion. Therefore, I think that in figuring up this loss of work we also have to take account of the fact that the greatest part of the compression is really produced at no additional cost; that is, there is little or no additional power required to compensate for what the engine theoretically loses through compression. While a difference may exist between the location of the most economical compression curve and the curve which the author calls "full compression curve," the curve representing the highest actual economy would be more like this [draws a compression curve on the blackboard nearly as high as full compression]. But, as one speaker said this morning, this question can only be decided after accurate trials, and it seems to me that it is very necessary at this time that we should know what is really the best compression curve.

Mr. Frank H. Ball.—Mr. Mansfield gives us some very interesting figures obtained from hypothetical diagrams, and some of his conclusions (notably that in the closing paragraph) are quite contrary to generally accepted ideas; but these facts and figures can hardly be considered as a discussion of my paper, because cylinder condensation is neglected.

My theory is based on the assumption that there is a loss by cylinder condensation, and that the loss is not in proportion to the work done, but is approximately a constant amount per stroke; and in seeking the largest amount of work per stroke on which to distribute this cylinder condensation loss, both the expansion and compression curves must conform to a certain law. I have not said anything about the effect of large clearance or small clearance, but have simply pointed out a law for obtaining the greatest M.E.P. with the least proportionate loss by free expansion, and have applied the law to a series of theoretic diagrams.

Professor Jacobus recognizes the fact that cylinder condensation is the starting point from which to discuss this subject, and the tests which he and Professor Denton have undertaken at the Stevens Institute will furnish valuable data, which, it is to be hoped, they will give to the Society at the next meeting.

Professor Barr, like Mr. Mansfield, disregards cylinder condensation; but even as a geometrical proposition, if it is required to obtain a given area of diagram within the limits of piston travel with the least possible loss by free expansion, it then becomes necessary to extend both the expansion and compression curves beyond the piston travel, and measure these free expansion losses. Professor Barr has only considered the free expansion loss on the compression curve, and does not take into account the loss at terminal pressure.

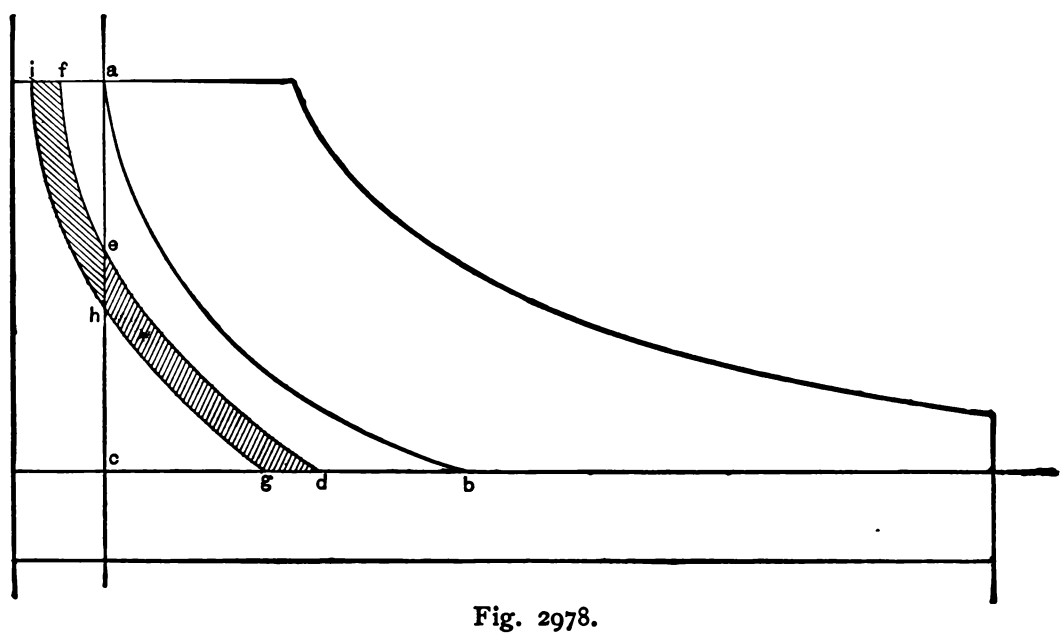

Fig. 2978.

Mr. Sederholm's remarks in regard to friction are very pertinent. Friction and condensation are presumably constant, or approximately so, and that is the theory on which this paper is based. It is, no doubt, a mistake to load an engine with a view to obtaining the greatest economy per *indicated horse-power*, thus disregarding the net horse-power delivered to the belt. The curves of efficiency, shown in Fig. 2976, of the paper under discussion, show that the best economy per *net horse-power* is with a greater load than that which shows the best performance per *indicated horse-power*.

In closing, I will say that you will notice I have not given any geometrical method for locating the compression curve. I left this, hoping that some of our professional mathematicians would suggest some mathematical method for locating this curve in conformity to the law which has been stated.

REGULATION OF STEAM-ENGINE GOVERNORS.*—Although the subject of governing steam engines has occupied the attention of engineers for more than a century, it is still imperfectly understood by users of steam. In spite of the fact that many excellent

* From a paper read before the Institute of Civil Engineers by John Richardson.

means of automatically governing the speed of an engine are known, it is not uncommon for a large and important engine to be without any reliable governor, and to depend entirely upon regulation by hand, the governor with which it is fitted being regarded merely as an indicator of the varying speed to warn the driver to open or close the stop valve. The great speed and

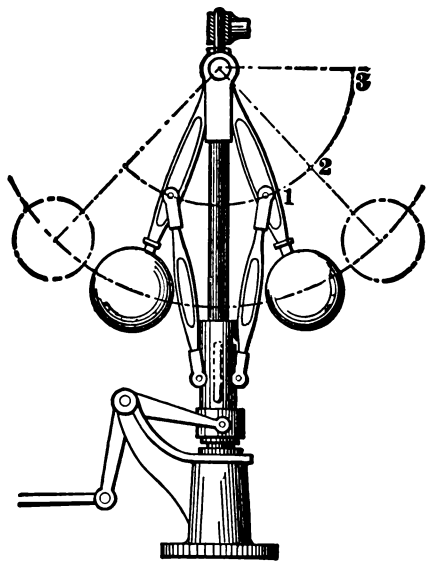

Fig. 2979.

delicacy of many of the machines used in the textile and similar industries, and the requirements of engines for the generation of electricity, have called forth many new methods of governing, particulars of a number of which will be described in this paper, some as types to be avoided, and others to be imitated. The author does not intend to deal with the theory of the action of

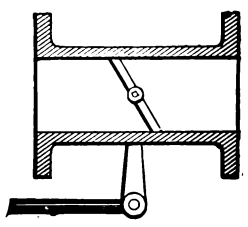

Fig. 2980.

steam-engine governors, as papers upon the subject by Professor Dwelshauvers-Dery and others have already been printed by the institution; but he proposes to deal with the practical results which can be obtained from a great variety of types that have come under his personal observation, and the causes of their failure or success. A good governor should be reliable, simple in

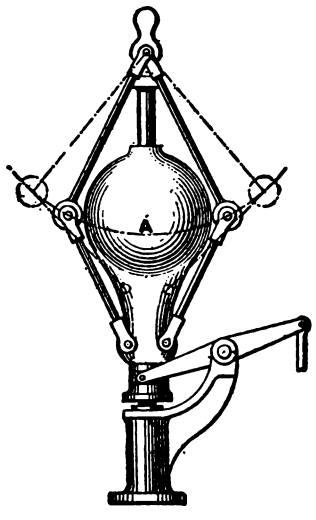

Fig. 2981.

construction, easy to drive, and instantaneous in its action, both in increasing, as well as in reducing, the supply of steam. It should not reduce the power of the engine to which it is applied, but should tend to economize steam; and while allowing for great variations in the power of the engine, it should maintain a practically uniform speed.

MECHANICAL REGULATION.—The form of governor in almost universal use until a few years ago was that invented by Watt, Fig. 2979. It was connected generally through several levers and rods with the wing throttle valve shown in Fig. 2980. This governor is still largely used, and is reliable and simple. It can prevent an engine from racing when the load is removed, and may regulate it within certain limits, but it cannot secure uniformity of speed under greatly varying loads.

The speed of revolution at which the balls can be maintained when in the position 2 in the figure is widely different from that required when they are in the position 1, and no possible increase of speed could raise them beyond the position 3.

The Porter governor, Fig. 2981, is a marked improvement upon

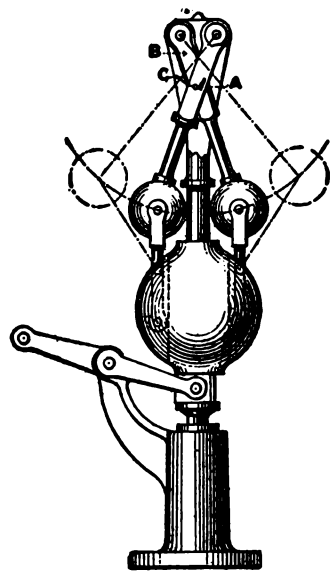

Fig. 2982.

the Watt governor. A heavy central weight A offers a constant resistance to the lift of the balls, which are caused to revolve at a much higher speed than would be required without the central weight. This governor gives a much wider range of travel with a smaller difference of speed than the Watt governor, and is largely used both in connection with throttle valves and with some forms of expansion gear.

A form of governor possessing some further advantages, which was designed by the author about twenty years ago, is shown in Fig. 2982. In this governor, the arms, instead of being suspended from two points, carry a central weight, and cross each other. The effective length of the arm, being that between the centre of the

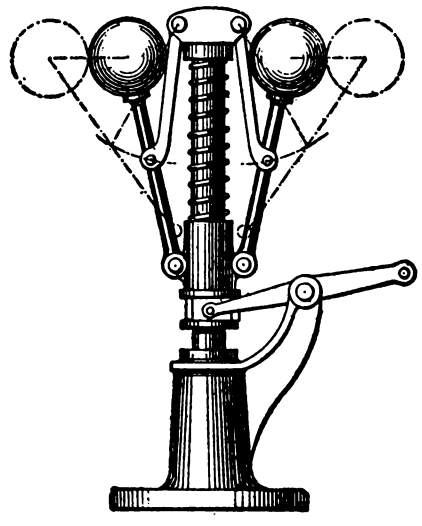

Fig. 2983.

ball and the point A where the arms intersect, increases as the balls rise.

The increase of length being shown by the difference between B and C, the balls are kept close together at their lowest position, and thus, as they diverge, the effective length of arm increases more rapidly than the rise of the balls. As is well known, it is quite easy to proportion governors of this class so that the sleeve will have a large range of motion with very small difference in speed. While this is a great advantage, it is obtained only at a sacrifice of power; and when rendered isochronous, such a governor is practically useless for controlling any valve or gear which

requires much power to move it, as at a fixed speed the weighted ball will stand indifferently at any point between its lowest and highest positions. To be of the greatest use, a governor must have great lifting power, forcing power, and stability at every point of its range, and a larger motion of the sleeve in proportion to the difference in speed of revolution. The ordinary pendulum governor is stable, but unless it is of great size in relation to the

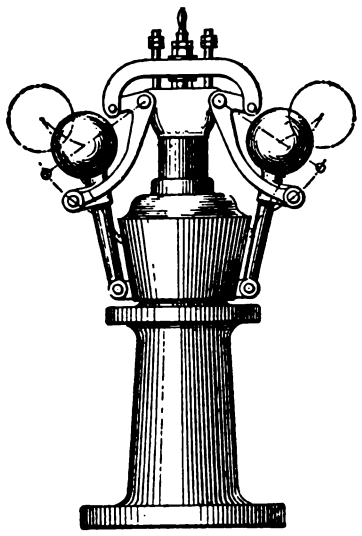

Fig. 2984.

engine it has but little lifting and forcing power; and in the paper communicated to the institution by Professor Dwelshauvers-Dery, he states that, as a result of experiments, "the logical conclusion is that the best governor cannot, when the greatest fluctuations in the load of the engine occur, prevent the velocity from varying by at least 10 per cent."

These conclusions applied to an ordinary pendulum governor,

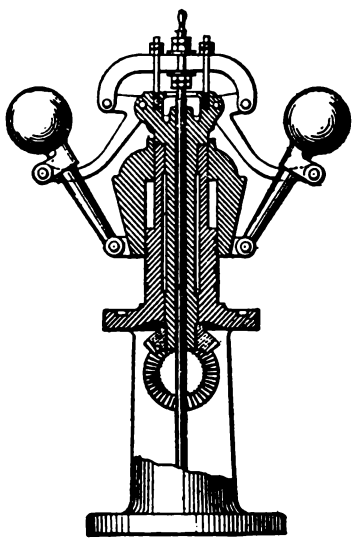

Fig. 2985.

are undoubtedly correct; but much better results may be obtained by the combination of such a governor with a spring.

In such a combination, an entirely new set of conditions is presented. Gravity, which is the only force causing the balls to close or fall in the Watt governor, may now be practically disregarded, for a much stronger force is substituted for it. Such a governor can, therefore, act equally well in any position. One of the earliest

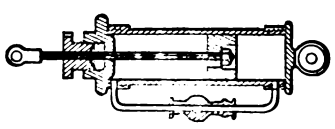

Fig. 2986.

examples of this kind of governor is that designed by the author in 1869, shown in Fig. 2983. In addition to the spring, another feature is introduced, viz., the lengths of the arms are so proportioned that the balls diverge in nearly a straight line for a considerable distance. The centrifugal force, generated by revolution at a given speed at a radius of 4 inches, is manifestly much less than that generated at the same speed with a radius of 8 inches, and this large difference is counteracted by the increasing force of the spring as it is compressed. Such a governor can be made to give a travel of the sleeve of, say, 3 inches, for a change of velocity of only 4 per cent., and it has a lifting and forcing power of 100 lbs. A variety of this type of governor, introduced by Proell about the year 1884, is illustrated in Fig. 2984. In it a heavy central weight is substituted for the spring, though the action of the arms is similar. Instead of the increased force of a spring, a weight is lifted at an accelerated speed as the balls diverge.

This governor is extremely sensitive, but has practically no lifting or forcing power, and needs a dashpot to give it stability. Something in the nature of a dashpot is introduced in the governor, and is shown in the section Fig. 2985, but as this contains air

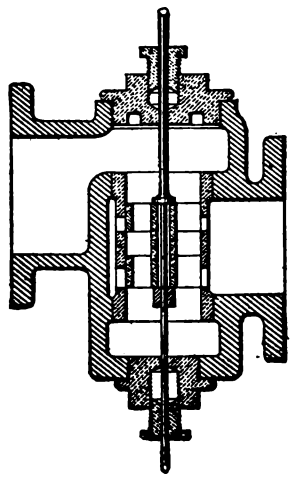

Fig. 2987.

only it is almost ineffective. A perfect governor should not need a dashpot, but if one be used it should contain some incompressible substance which can escape only through a small aperture from one side of a piston to the other, as shown in Fig. 2986. In the opinion of the author, however, all such attempts to give stability to a governor are but expedients to minimize an evil, which might and can be entirely eliminated. Until comparatively recently, governors for controlling the speed were almost universally applied to engines by means of the wing throttle valve shown in Fig. 2980. This valve, though simple in construction and easy to move, is difficult to fit so as to remain steam tight. One of the first requisites of a regulating valve is that it should be able to entirely stop the admission of steam, and this becomes more im-

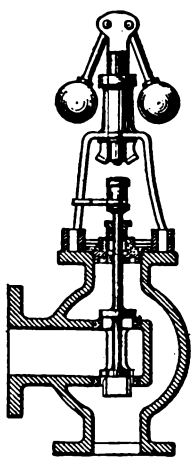

Fig. 2988.

portant as the steam pressure becomes higher. The valve shown in Fig. 2987 is a considerable improvement upon the butterfly valve. It is easier to make and easier to work, and for regulating variations in load with a good governor it acts well. It is, however, more difficult to obtain a perfect fit with it than with a piston valve, so that the valve will move without friction, but still be sufficiently tight to shut off all steam. Careful experiments made with free-running engines show at least 15 per cent. of variation between all load on and all off; the small space required to pass sufficient steam to drive an unloaded engine being almost incredible.

The equilibrium double-beat valve, Fig. 2988, has been found by the author to give the best results of any kind of throttle valve. The arrangement shown in the figure is that of a valve not quite

in equilibrium when closed—the area of the upper part being so much greater than that of the lower, which is equal to the area of the stalk, that the valve has a constant small upward pressure whether on or off its seat, which makes it move readily to respond quickly to minute changes of the governor, there being no slack or backlash.

Combined with a well-proportioned high speed spring governor, it will, with changes of load not exceeding 45 per cent. from the maximum, maintain a speed within 5 per cent. of the normal; but the difference between maximum load and no load is nearly 10 per cent. with a steam pressure of 100 lbs. per square inch, the difference being much less with a lower pressure of steam.

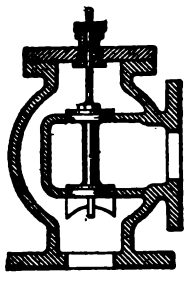

Fig. 2989.

Another form of valve which is largely used in England and in America is shown in Fig. 2989. It works nearly in equilibrium, the stalks being small, and the two disks being of the same diameter. Combined with its own governor, it will maintain a nearly constant speed with moderate changes of load, but it fails to cut off the whole of the steam, and thus, with light loads, or no load, the variation of speed is very considerable. Careful experiments upon it show a variation of speed of 14 per cent., and it was found impossible to reduce the difference below this amount, when the comparison was made between the greatest load the engine could carry at a definite speed, and no load. Though there are many varieties of throttle valves for regulators, they are all more or less varieties of the four types described, viz., the butterfly, the piston, the disk, and the equilibrium double-beat valve; and Table I above shows about the best results that can be expected of them. All throttle valves, though simple and easy to manage, have necessarily the objection that they regulate the speed by altering the pressure of steam in the steam chest and cylinder, and thus cannot fulfill two of the essential conditions of a good governor, namely, that it should not diminish the power of an engine, and that it should increase, rather than diminish, the economy of steam. For many purposes, however, where great delicacy of governing is not needed, such a valve as that shown in Fig. 2988 is all that is required. The next important type of governor is one which controls a slide valve, and which regulates the speed, either by regulating the travel and angle of the main valve, or by limiting the admission of steam through controlling the angular advance and travel of a cut-off slide working on the back of the main valve.

Governors of the former type generally revolve with the crank-shaft, and are known as shaft governors. One of the first of these

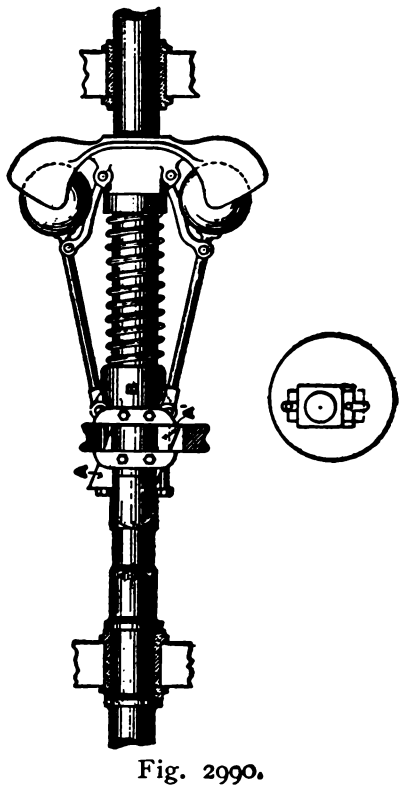

Fig. 2990.

to be used, being that made by the author in 1869, is shown in Fig. 2990. In this case a governor of the spring type, Fig. 2983, is used in connection with an adjustable eccentric. Fig. 2991 is a copy of the first diagram taken from an agricultural eight horse-power engine fitted with this type of governor. The object to be attained is to move the centre of the eccentric in a straight line at right angles to the crank, thus maintaining a constant lead while

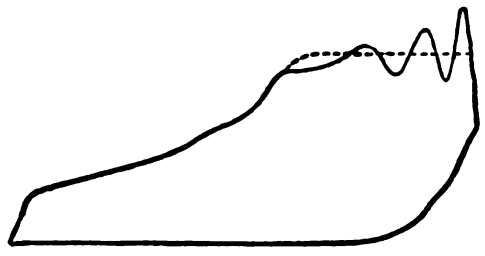

Fig. 2991.

varying the valve travel and the point of cut-off, yet at the same time to hold it firmly at all points. This is an important advan-

TABLE I.

Pressure at Stop-Valve.	Revolutions per Minute.				Permanent Variations in Speed due to Change in Load.		Temporary Fluctuation in Speed due to Change in Load.				Brake H.P.		Time Coming to Rest.	
	Light Engine.		Loaded Engine.											
	English Shaft Governor.	American Centrifugal Governor.	English Shaft Governor.	American Centrifugal Governor.	English Shaft Governor.	American Centrifugal Governor.	English Shaft Governor.		American Centrifugal Governor.		English Shaft Governor.	American Centrifugal Governor.	English Shaft Governor.	American Centrifugal Governor.
Lbs. per sq. in.					Per cent.	Per cent.	Revolutions per Minute.	Diff. per cent.	Revolutions per Minute.	Diff. per. cent.			"	"
50	364	345	352	305	3.2	11.5	350–390	11.1	.....	.....	6.00	5.2	0 20	5
60	365	350	352	310	3.6	11.5	350–400	13.9	310–360	13.9	7.80	6.9	0 40	10
70	362	355	350	320	3.2	9.8	350–380	8.7	310–370	16.7	8.75	8.0	1 15	25
80	360	360	350	325	2.8	9.7	350–390	11.1	310–370	16.7	9.75	9.0	0 20	30
90	362	362	352	305	2.8	15.2	350–380	8.7	280–370	25.0	12.40	10.8	0 50	10
100	364	362	350	305	3.8	15.2	350–380	8.7	280–370	25.0	13.00	11.3	0 50	15

English shaft governor as in Fig. 2993. American centrifugal governor as in Fig. 2989.

tage, and permits its application to an ordinary simple flat slide valve, while governors which depend upon the stability of position in the balls or weights, need an equilibrium slide valve, because they are not sufficiently stable to work with a flat slide. A considerable number of these governors have been made, but twenty-five years ago the expansive working of steam was not so well understood and appreciated by users of steam as at present; and further, the governor in that form, owing to the large space occupied, was not applicable to many types of engine.

A modification of this gear, occupying much less space, but working on exactly the same principle, is shown in Fig. 2992. The eccentric is guided and driven from the slots in the Plate A, and is caused to travel at right angles to the crank by means of the wedges B B, which are again moved by the arms of the gov-

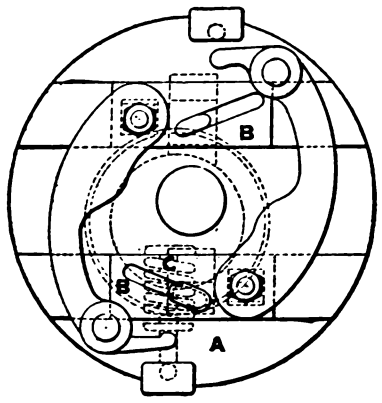

Fig. 2992.

ernor, the centrifugal force of the balls being counterbalanced by the spiral springs C. The wedges B B are each double; that is to say, a wedge above and one below, this being necessary, as the shaft has to be both pulled and pushed. When connected at their ends, the two wedges become a plate with an inclined slot in it. A much simplified modification of this arrangement has been made by Mr. Buck, a member of the author's staff, and is illustrated in Fig. 2993. In this, the two flat plates working in planed grooves are replaced by a disk E, partially revolving on the boss of the casing. An inclined slot is cut in this disk, and the incline is bent to a radius equal to its distance from the centre. In this slot, a projection from the eccentric slides and is moved at right angles from the crank as before. This partial revolution of the disk is given by the weighted arms of the governor, as in the case of the straight wedges, but in this case through the links D D.

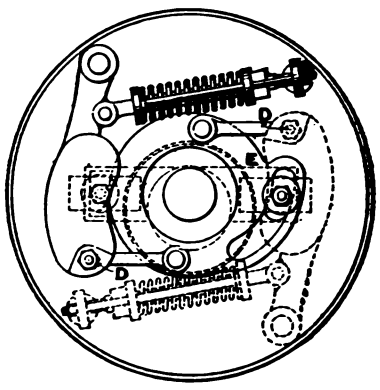

Fig. 2993.

The whole of the governor is contained within the rim of the fly-wheel or driving-pulley of the engine.

As will be seen from examination of the governor, which is laid on the table, the whole of the driving is done by the disk, the eccentric is held rigidly in position by the slots and wedges which are at right angles to each other, and there are, nevertheless, four points in each revolution when it is quite free to be moved and adjusted by the governor-arms. With a properly proportioned governor of this type, there is no difficulty in maintaining a practically constant speed of the engine with ordinary changes of load, and with so wide a range as between three-quarters and zero in the admission of steam; in other words, between maximum load and no load, the variation of speed can be reduced to 3 per cent., which is sufficiently near for all practical purposes. With this method of governing there is, of course, no wire drawing of the steam, and thus no reduction in the power of the engine; and further, the full boiler pressure being always attainable, the steam can be cut off early, and the maximum economy obtained from it. Table I shows the difference in power between the same engine with this governor, Fig. 2993, and with an American governor, Fig. 2989, the engine being loaded in the latter case till the speed fell 10 per cent. below the speed when unloaded, and with the wedge-governor to 3 per cent. below that speed.

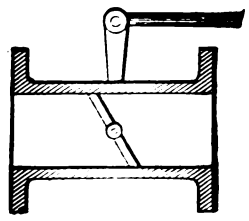

Fig. 2993a.

As shown by Table I, which is a further comparative test, the American pattern of throttle-valve governor reduces the power at all pressures much more than shaft governor, the latter allowing the engine to develop on an average about one-sixth more power with the same pressure of steam. With the shaft governor, the variation in speed is between 2¾ per cent. and 3½ per cent., and with the throttle valve 10 per cent. and 15 per cent. With the more delicate governor, the fluctuation, though less in quantity, is naturally greater when measured by time, in one case amounting to seventy-five seconds. In this case, however, the extreme variation for the first second was only 8.7 per cent. and gradually fell to zero. With the less sensitive governor, rest was arrived at in twenty-five seconds, but the variation was more than twice as great, viz., 16.8 per cent. Another important difference is remarkable, viz., that with the shaft governor the variation is nearly all upward; thus, if the normal speed is 352 revolutions per minute, when the load is suddenly applied the decrease of speed is only two revolutions per minute, and the variation causes an instantaneous upward rise gradually coming to rest with decreasing oscillations. On the other hand, with the throttle valve the sudden change is downwards, gradually rising, with few oscillations, from 310 to 350. It should be noted that the changes in load were made suddenly, all being put on and taken off at one time. With gradual changes there is practically no fluctuation either with the shaft or throttle-valve governor. Table III shows

TABLE III.—SHOWING UNIFORMITY OF SPEED FITTED WITH A SHAFT GOVERNOR.

Revolutions per Minute.	Amperes.	Revolutions per Minute.	Amperes.
214	0	208	380
213	50	209	280
213	65	211	180
210	80	213	80
209	180	214	0
209	280		

the slight variation in speed of an engine fitted with this governor driving an electric-light installation, from which it will be seen that the total variation in speed is slightly under 3 per cent. from no load to full load, and that with variations of over 50 per cent., or from 280 to 380 amperes.

The variation in speed is only 1 revolution per minute, or less than ½ per cent. The power of this governor, to prevent any of its parts from being removed out of their proper positions, is very considerable, the springs requiring a force of 1,100 lbs. to move them from the extreme inward to the extreme outward position. It may be pointed out here that the position of the weights and the strength of the springs does not work out strictly according to the recognized laws of centrifugal force. These laws are, of course, correct for freely moving bodies, but are not true for bodies mov-

ing freely at one part and suspended at another from a point fixed with relation to the centre round which they revolve. The diagram, Fig. 2994, shows graphically the relation between the calculated, experimental, and theoretical pressures of a spring resisting a certain centrifugal force generated by a weight revolving at a constant speed but at different radii. The slightly curved short dotted lines show the variation in pressure, which experiment indicates is actually required when the weights are suspended on pins, and the straight line shows the calculated strength

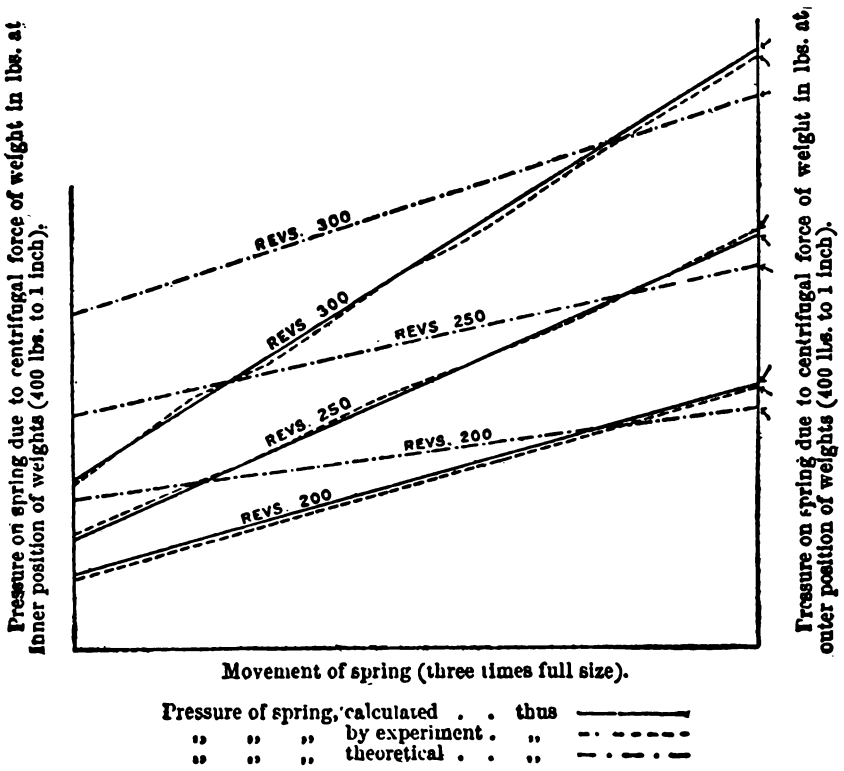

Fig. 2994.

of the spring when allowance is made for this. The author is indebted to his assistant, Mr. Wansbrough, for assistance in working out this method of calculation, and the diagram shows that in a large number of cases it is correct. It will be noted that the lines intersect before the point of highest pressure, and the extra strength of spring beyond this point exactly corresponds with the 3 per cent. increase of speed allowed with no load.

Link expansion gear is chiefly identified with the name of Allan, and was first introduced in Europe at the French Exhibition of 1864. Allan worked, as is well known, with one eccentric; but the most common form of link expansion gear is that shown in Fig. 2995, one eccentric being used to drive the main valve B, which thus has a constant lead compression and exhaust; another eccentric set at an angle to it controlling a separate cut-off A, fitted on the back of the main valve. The stroke of this cut-off valve, together with the point of cut-off, is regulated by the position of the valve rod C, with the other end of which the cut-off valve is connected. With this type of gear a range from nearly three-quarters to zero can be obtained, together with a very good distribution of steam, as shown by the diagrams, Figs. 2996 and 2996*a*,

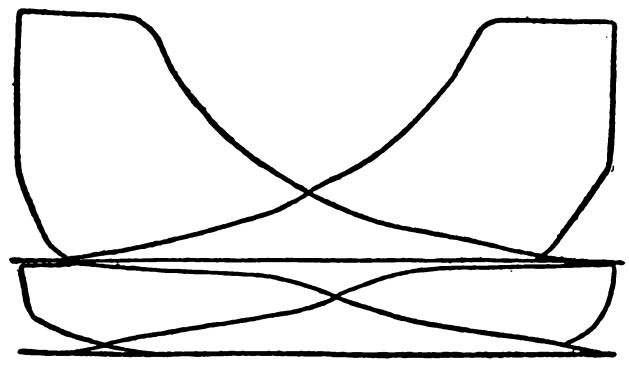

Fig. 2996.

taken from an engine fitted with this gear. Its success depends very much upon the type of governor used in conjunction with it, which must have a wide margin of stability. The author has

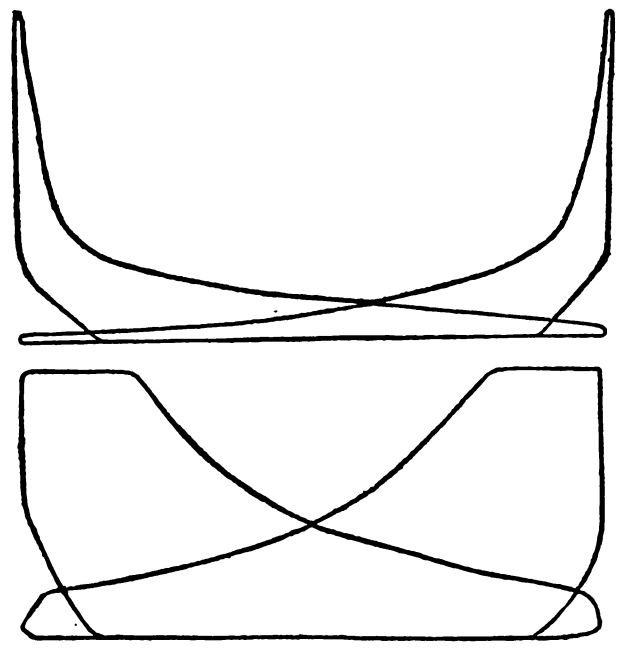

Fig. 2996*a*.

experimented with Watt, Porter, and Buss governors with unsatisfactory results, as all needed a dashpot to give them stability and to prevent the angle of the link causing oscillation in the governor. The dashpot arrangement cured this, but, of course, rendered the governor more sluggish in its action, so that with wide changes of the load there were great temporary changes of speed; though the engine would settle down to approximately its normal speed within one or two minutes. With the governor shown in Fig. 2995 there is no need of a dashpot, the change of position occurring instantaneously and the acceleration of speed being a matter of one or two seconds only. The stability of the governor is very great, and although the arms, balls, and spindle together

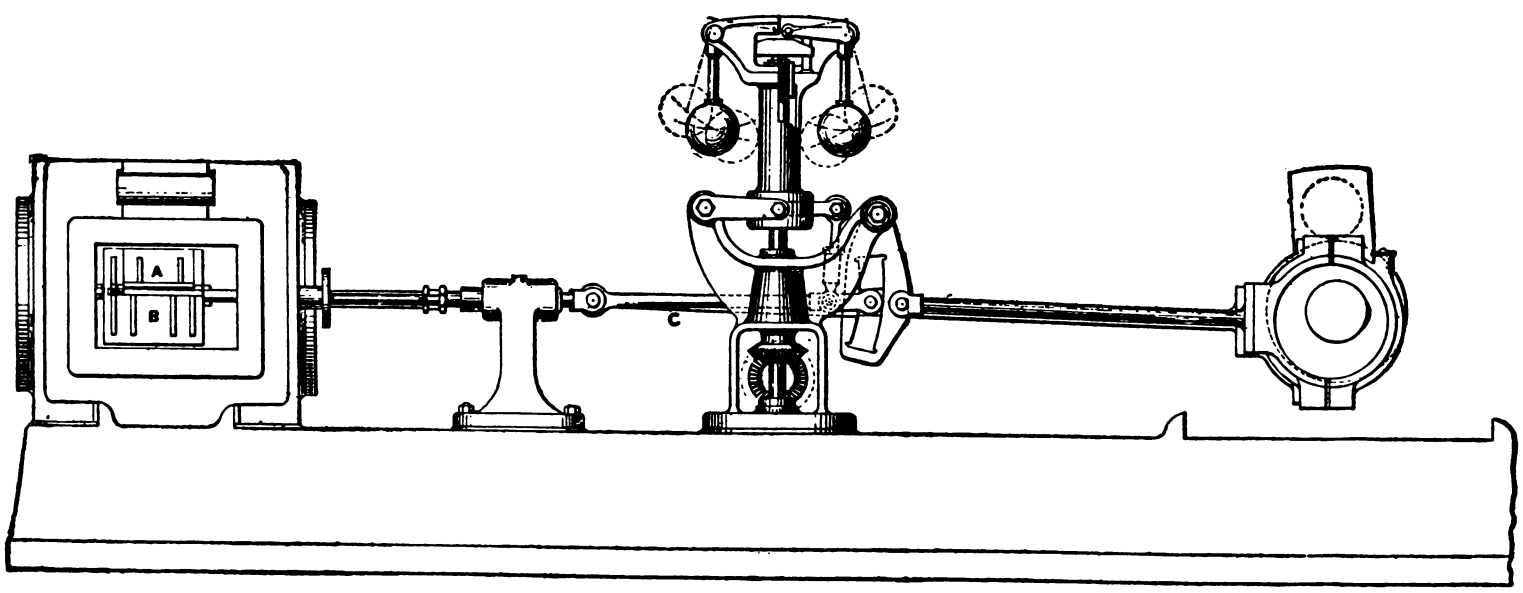

Fig. 2995.

weigh only 53 lbs., yet it would require a force of over 400 lbs. to move it to its highest position when at rest. When it is running at a speed corresponding to its lowest position a force of 216 lbs. would be required. With an acceleration of only 4 per cent. it overcomes a further pressure of 200 lbs. It will be noticed that

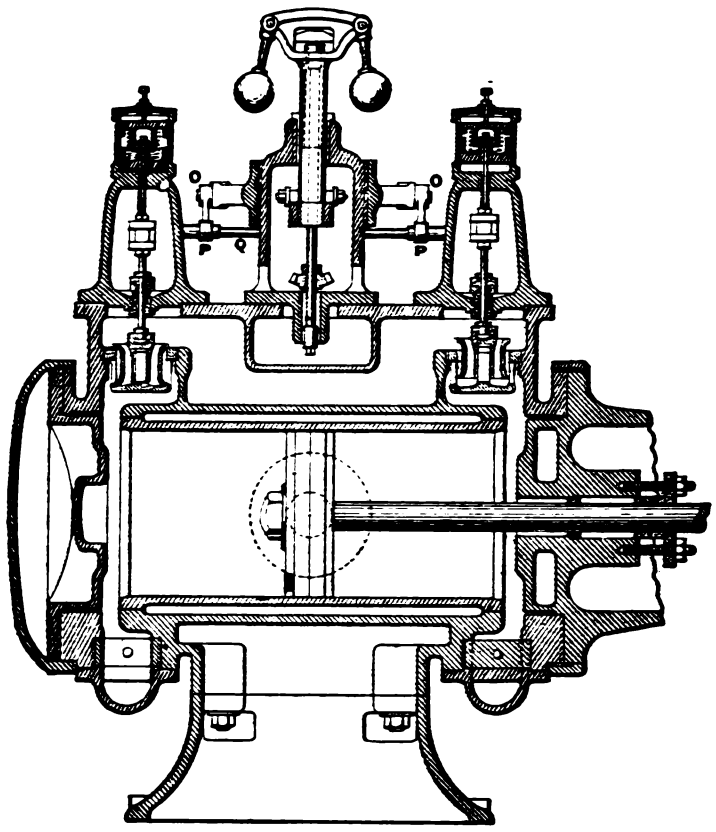

Fig. 2997.

the balls move outward in a practically straight line in the same way as the balls of the governor shown in Fig. 2983. For engines of moderate size, of say 50 or 60 HP., and working with a steam pressure of 80 lbs. per square inch or less, such a form of expansion gear is one of the best that can be used.

The much higher pressures, however, which are necessary for

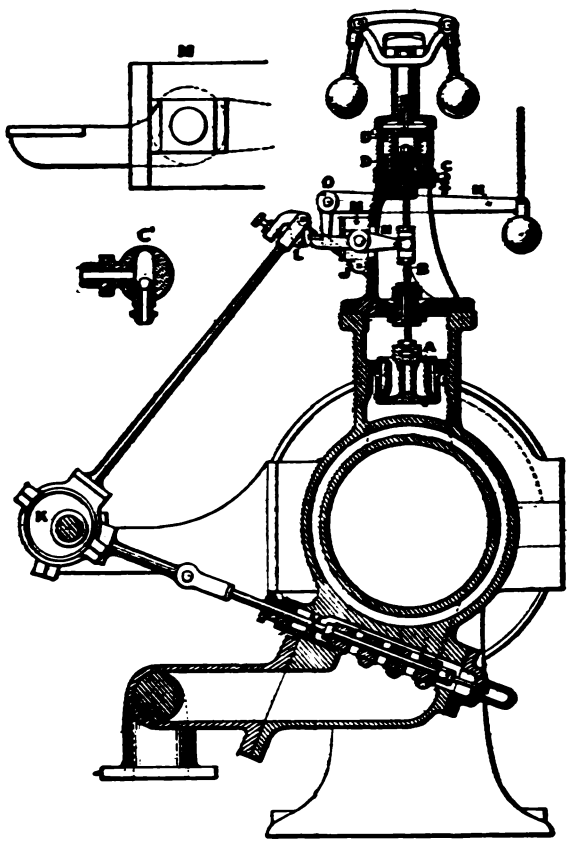

Fig. 2998.

the most economical use of steam, necessitate the use of valves which will work in equilibrium or nearly so. These are mainly of three kinds—piston valves, rotating or circular valves like the Corliss, or double-beat valves like that in Figs. 2997 and 2998. Slide valves absorb a great part of the power of an engine working with high-pressure steam. The author has made a series of experiments showing the amount of this friction, but would now only state that his experiments show it to absorb often more than 10 per cent. of the whole power exerted by an engine, while the power required to work the equilibrium valves, shown in Fig. 2997, is quite insignificant and is almost independent of the pressure of steam used. This type of valve is much used in connection with a variety of valve gears. That shown in Figs. 2997 and 2998 is believed by the author to combine many advantages not secured by the others. It consists, as will be seen from Fig. 2998, of a double-beat valve A, guided by a central stem. The valve is lifted by the steel stem B, at the upper end of which is a grooved piston D, a light spring pressing it down. A small hole at the bottom of the cylinder is in communication with the upper part of a valve-box C, in which works a small ball valve. The valve is shown in section and on a larger scale at C¹.

The object of this piston and cylinder is to control the valve as it decends upon its seat, and thus to prevent a disagreeable noise and unnecessary wear. As the spindle with its piston and valve rises, air is drawn in through the valve C¹. When it is suddenly relieved and falls, the contained air moves slowly through a fine hole in top of the valve-casing, and the valve A is relieved of inconvenient shock. The arrangement described, or some modification of it, is used by several English and Continental makers of steam engines. The peculiarity of this gear lies in the method by which the point of cut-off is controlled by the governor.

The valve spindle B is lifted by the lever H when the outer end

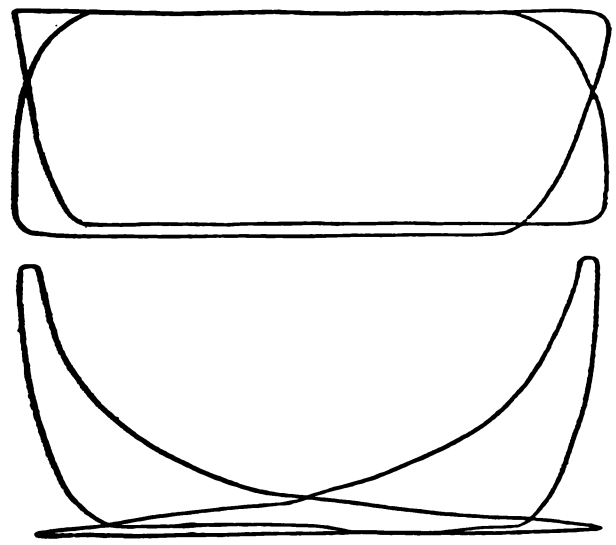

Fig. 2999.

of the lever is depressed. This depression is caused by the eccentric K, which revolves in equal time with the engine shaft. The upper end of the eccentric rod is attached to a pair of rocking levers J and also carries a tripper with a steel toe L. As the rod rises, this toe is thrown back, but as soon as it gets above the levers it is allowed to fall to its original position. On the downward stroke of the eccentric the toe of the tripper depresses the lever, raising the valve, until, being pushed out by radius rods, it releases the valve, which instantaneously falls upon its seat. It will be seen that the more the toe of the tripper overlaps the end of the lever H, the longer it will remain in contact with it on the downward stroke, and thus the valve will remain so much longer open while the lead remains constant.

The amount of the overlap is regulated by the governor in a very simple manner. The fulcrum of the lever H is movable, and can be moved from right to left in a straight line in the slot M. The spindle O has two levers upon it, connected by short links P P to a rod Q passing through both fulcrums. The entire movement required is a horizontal motion of this fulcrum, and even in large engines of, say, 500 HP., it is only about ¾ inch, and can be moved with the smallest effort. There is, therefore, absolutely no stress upon the governor, and not the slightest tendency for it to work or jump due to the working of the valve gear. So far from this being the case, when the valve is lifted the fulcrum is pushed down and so held rigidly in position, the movement of the fulcrum having to take place during the interval when the valve is not being lifted. The range of expansion which can be obtained

by this means is very large, extending from zero to seven-eights, and is shown in the diagrams, Figs. 2999 and 2999*a*, taken from an engine fitted with this gear. The absence of any sensible stress upon the governor enables a very small one to be used; and in practice it is found that a governor even for an engine of 1,000 HP. need not weigh more than 90 lbs. It will be noticed that there is no upper collar to the governor, nor is one needed for its proper working, the weight of the lever N and the small ball hanging from it being quite sufficient to keep it always in contact with the lower collar. An important advantage possessed by this gear valve results from the fact that it allows of the engine being

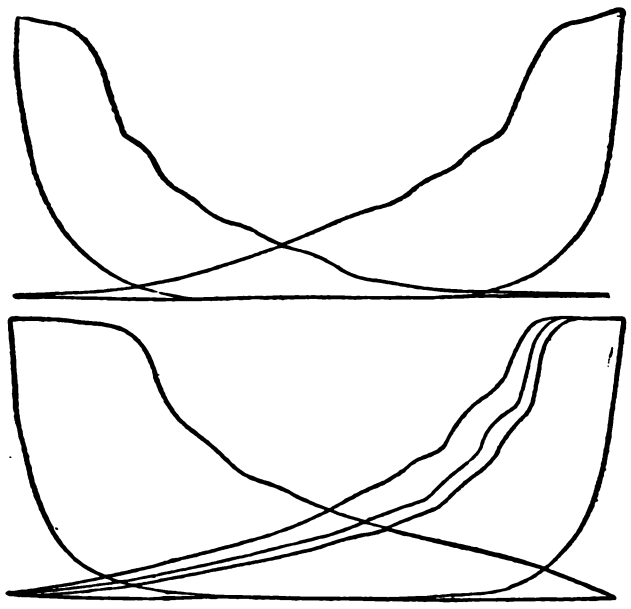

Fig. 2999*a*.

stopped immediately by merely raising the governor lever; and if a cord from the end of the lever is carried into every room in a factory or a mill, in event of accident the engine can be stopped by merely pulling the cord, even from a great distance.

ELECTRICAL REGULATION.—The conditions which obtain for regulating engines driving dynamos are not quite the same as those for maintaining a constant speed in other machinery. If the electric current produced by the engine be utilized to control its speed, it then becomes possible either to run the engine at a practically uniform speed in connection with a perfectly compounded dynamo, or to run it at a varying speed, maintaining either a constant difference of potentials with a varying current,

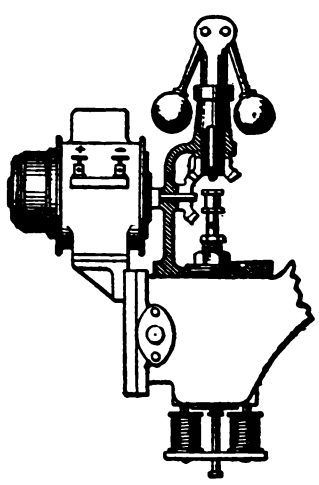

Fig. 3000.

or a constant current with a varying difference of potentials. Further, by utilizing the changes in the current to control the engine, it is not only possible, but quite easy, when the load is suddenly decreased, to effect what is impossible with a speed governor, viz., to shut off for a time the whole of the steam supply before the engine has had an opportunity of increasing its speed, and thus to deprive the engine of steam until its speed has fallen to just what is necessary for the diminished load, the steam supply being gradually increased until exactly sufficient for the load is supplied.

Conversely, when the load is suddenly increased, and before the engine has had time to diminish its speed, the fullest supply of steam is given, and only then diminished to an amount corresponding with such increased load.

In Figs. 3000 to 3006 are shown a number of appliances which have been devised and tested by the author for the electrical regulation of steam engines. Some of them, however, are shown as examples of what may be avoided, because, though apparently plausible in theory, they fail in practice. Fig. 3000 shows the direct drive of a governor by electricity which, though the first successful attempt to control the speed of an engine by the electric current, was an indirect method of attaining the result. The two small magnets under the valve were intended to act as weights to close it, should the current be broken in any way, and thus stop the engine; these being, of course, held out of position during the time the current was passing.

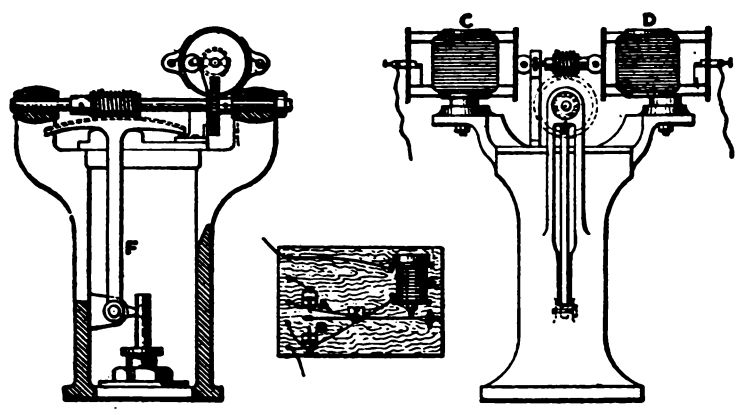

Fig. 3001.

In another form of governor, Fig. 3001, there is no solenoid in direct connection with the valve, and only a small one E, moving a light lever, at the end of which are two platinum points. This lever and the fixed points A and B are so arranged that when the lever is in contact with the upper point, the small motor C is caused to revolve, and by means of the crank lever F the valve is closed, and, of course, the reverse action takes place when the lever is in contact with the lower point. By this means it was thought that, as the solenoid at a certain intensity of current must be maintained in one position, when this intensity was arrived at the lever would remain at rest. Careful tests, however, show that this is not so; however small the time occupied in making contact and setting the motor to work, it is

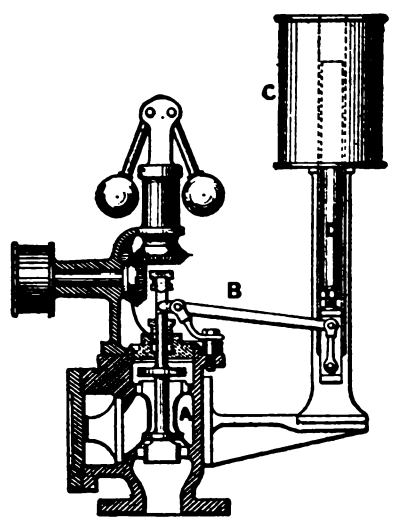

Fig. 3002.

enough to cause the engine to vary its speed too much, and the result is persistent hunting. This apparatus, therefore, must be considered a failure, though several modifications of it have since been introduced.

Fig. 3002 illustrates a very simple arrangement in which the equilibrium valve A, having a spindle projecting through a stuffing box, is pressed upwards by the steam with a force due to its unit pressure multiplied by the area of the valve spindle, say, 15 lbs., and is held down by the short arm of the lever B, which has a ratio of 10 to 1, so that the force required is 1 or 2 lbs.

The electric current circulating in the two solenoids C holds up

two iron cores weighing 2½ lbs., and a very slight variation in the current tends to cause a considerable alteration in the position of the cores, especially when they are placed at the position of maximum effect, as in Fig. 3002. It is remarkable how slight a movement of the valve is required to effect the regulation. Very careful experiments have shown that for an engine working up to 25 HP. with equilibrium valves of 2 inches diameter, it required to be raised only 0.008 inch from its seat to run the engine at full speed unloaded; and it needed to be raised only 0.031 inch to run the engine at its full power—the variation or actual lift of the valve being thus only 0.023 inch; and, as the ratio of the lever is 10 to 1, the amount of movement of the solenoid cores is only 0.23 inch.

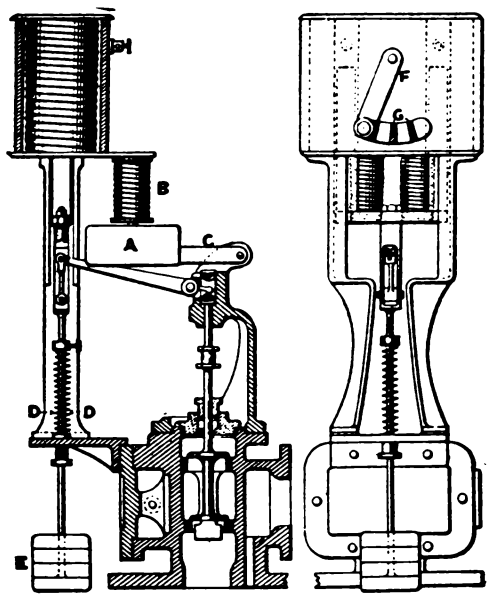

Fig. 3003.

When a load is put upon the engine, however, the fall is always much more than this, and occurs instantaneously, and before the engine has had time to diminish its speed. The valve is thus opened, for a few seconds, three or four times as wide as in its normal position, until the engine has received its full extra power; the solenoid then rises to nearly its former position. The reverse action takes place when the load is thrown off. The governor simultaneously, with the reduction of load, closes the valve entirely and keeps it closed until the momentum is so far expended that the engine slightly slows, when the valve is gradually opened, just enough for the reduced load.

The action is instantaneous and direct, and there is no hunting.

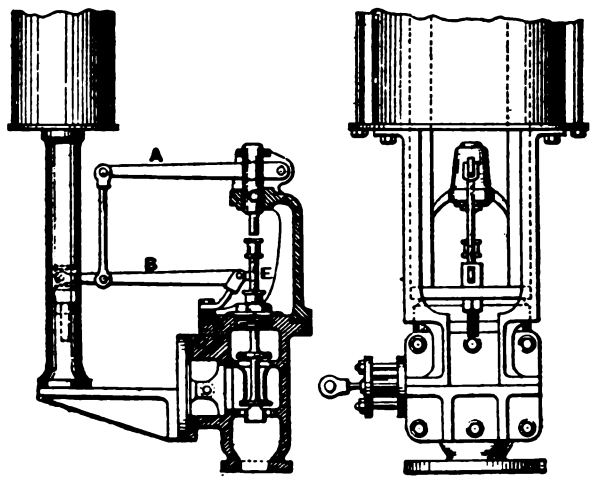

Fig. 3004.

This apparatus is suitable for comparatively small engines, say, up to 50 HP., but when large powers have to be regulated by a throttle valve it is not economical enough in steam, and the valve would need too large a solenoid to control it within narrow limits, and would absorb too much current. Figs. 3003 and 3004 show other forms of governor, with automatic arrangements for stopping the engine in case of failure of the electric current. In Fig. 3003, which was the first form used, a heavy weight A is held up by an electric magnet B so long as the current is passing, but is released on the current stopping, when the lever C, falling upon the valve spindle, instantly closes it. The spring D and the weight E were for regulating the solenoid to the exact quantity or intensity of current required, as was also the lever F, which, passing over the contacts G G G, disconnects one or two of the coils out of circuit. A simple way of stopping the engine is shown in Fig. 3004, where the weight of the solenoid cores is used to close the valves on breakage of the current, acting through the lever A. While the solenoid is active, the regulation is effected through the lever B, A moving idly; but the instant the current is broken, the cores fall; the lever A presses upon the valve stalk through the plunger C, and this is free to close, because the small end of the lever B works in a slot in the spindle with clearance upwards, all of its work being done and its only contact being on its lower edge.

The type of valve gear illustrated in Fig. 3005 lends itself admirably to electrical control, and an arrangement to control it by electricity was devised by the author and Mr. R. H. C. Nevile in 1886. As the power required to move the governor lever A is practically nothing, a small solenoid and slight current is sufficient to effect the entire control of engines of 800 to 1,000 HP. While any current is passing through the solenoid the engine is under perfect control; but should the current be broken from any cause, the

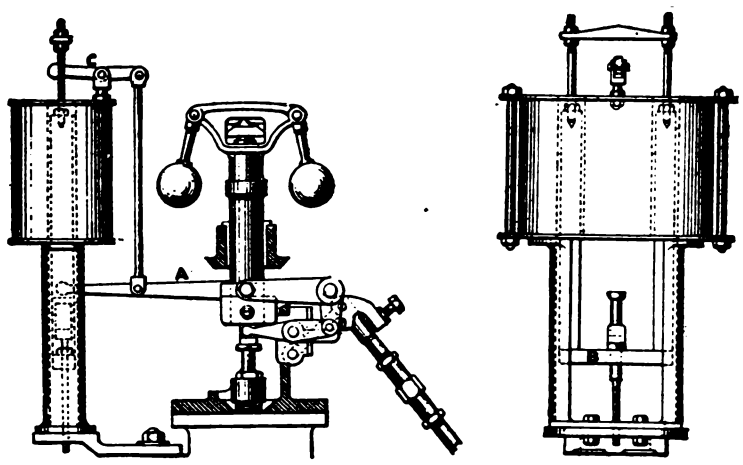

Fig. 3005.

cores B instantly drop, when their weight depresses the lever C, and raises the lever A, as shown in Fig. 3005. Instead of this arrangement, a speed governor can be used in connection with the electrical governor, so arranged that it does not come into action until the speed has been increased by a certain percentage. This plan is also shown in Fig. 3005. This method of governing electric-light engines has been adopted in some important installations, and is very useful when an engine has to be used for sawing or pumping in the day and for electric-lighting at night. Up to the present time, however, no case has come to the author's knowledge where the safety of the apparatus has been needed; but it is none the less essential that it should be provided.

TABLE IV.—TESTS OF THE SOLENOID AND THROTTLE-VALVE GOVERNOR.

Lamps.	Revolutions.	Amperes.	Lamps.	Revolutions.	Amperes.
17	146	10.2	11	96	10.2
17	144	10.2	11	92	10.3
17	143	10.1	11	90	10.3
17	137	10.2	11	89	10.3
17	133	10.2	11	85	10.5
17	119	10.2	5	70	10.0
16	133	9.9	5	60	10.5
16	132	10.1	0	30	10.4 10.6
16	129	10.2	0	24	11.0 11.2
11	107	10.1			Unsteady
11	101	10.0			

Table IV shows some tests of the solenoid and throttle-valve governor made by Professor Silvanus Thompson some years ago; and, so far as the author is aware, every electrical governor made has continued in use up to the present time—the repairs and wear and tear being inappreciable—nothing being required beyond an occasional grinding of the valves.

Tests recently made of a pair of large engines with the solenoid

working the trip gear show that, after eight years' use, they are practically as good as new. One of the bobbins had, in this case, short-circuited on the brass flange, causing the wire to heat. A more recent method of construction, by winding the solenoid upon a vulcanite instead of upon a brass or copper insulated hollow collar, has prevented this. In connection with this governor a small resistance box is usually supplied. This is put into circuit with the solenoid, and by its means the amount of current passing through it can be regulated to a nicety, and the speed of the engine adjusted to exactly what is required. Once adjusted

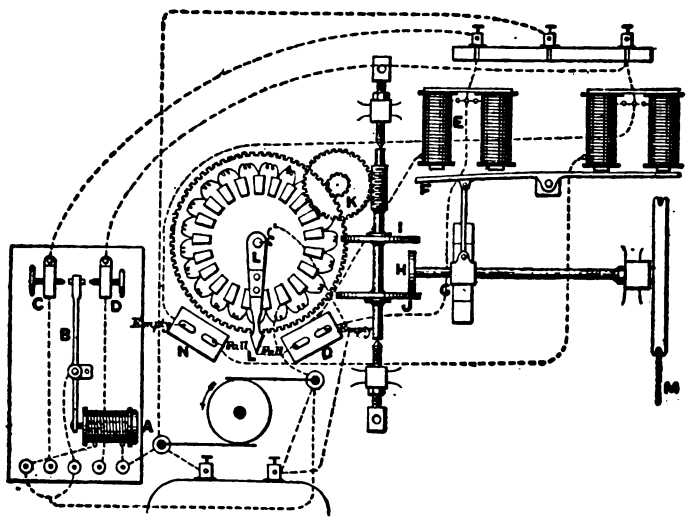

Fig. 3006.

with the same intensity of current, the speed will be modified to maintain the intensity.

In an electric installation covering a large area, there is a definite loss of pressure in the mains on account of their length. If, however, a wire be brought from the centre of the illuminated area and attached to the small solenoid A, Fig. 3006, a constant intensity of current will maintain a constant position of the solenoid core and will keep the lever B midway between two contact points. As soon as the slightest difference of pressure arises, not only does the main solenoid core rise and cut off the steam, but contact is made between B and C, exciting the small electro-

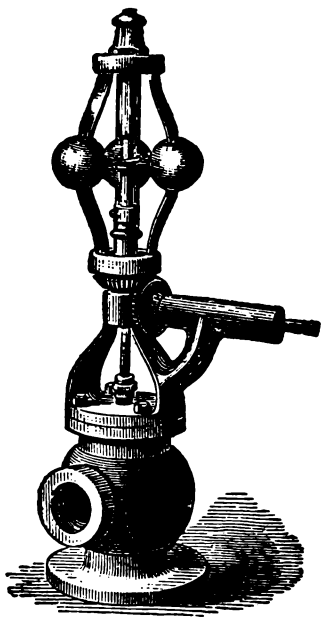

Fig. 3007.

magnet E; through the armature F pulling the spindle G with its revolving disk H into contact with the disk I; and through the gearing K causing the contact lever L to move so as to cut off one or two of the resistance coils. By this means the main solenoid is intensified and the speed is reduced until the lever B regains its mean position. It will be seen that the electric work, while very delicate, is insignificant in quantity; the real work being done by the driving-cord M from the dynamo shaft. The two cells O and N are required to cut out the current should there be a tendency for the lever L to travel too far. In practice, however, these have never been needed. In fact, the action of the simple solenoid working direct on to the expansion gear gives such satisfactory results that there is no need of the relay and supplementary control shown in Fig. 3006, and it is illustrated only to show within what very fine limits electric control can be carried if desired.

In bringing under the notice of the institution the various methods of regulating steam engines, to which allusion has been made, the author, while fully aware that he has traversed but a small part of a very wide field, hopes that some novel and valuable facts may have been brought forward.

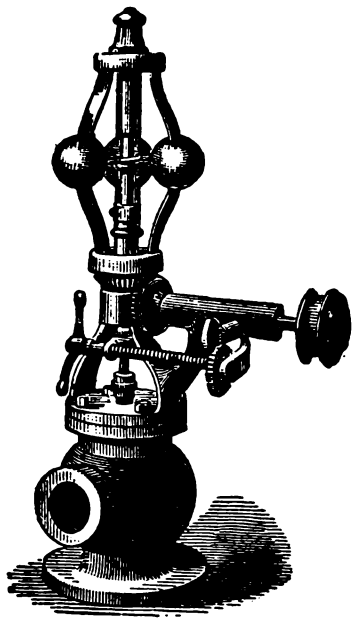

Fig. 3008.

The Figs. from 3007 to 3011 represent the Pickering governor; its simplest form being shown in Figs. 3007 and 3008 with the driving puley and speeder (or engine speed regulating device) attached. This speeder consists of a spiral spring whose tension may be adjusted so as to more or less resist the rise of the governor balls, and thus enable the engine to run at a greater speed for a given amount of rise of the governor balls; hence, by increasing the tension of the spring, the engine speed is increased.

THE SPRING ADJUSTMENT.—The adjustment of the spring

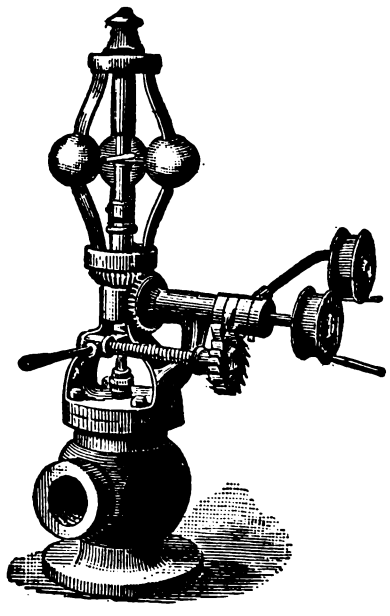

Fig. 3009.

tension is made by a worm actuating a worm wheel on a rod passing through the spring, and to which one end of the spring is attached, the other acting on an arm that projects into a slot in the governor spindle. It is obvious that the speeder can be adjusted while the engine is running.

In Fig. 3009, the governor is shown with the speeder and Sawyer's valve; the latter enabling the governor valve to be opened or closed without effecting the rise or fall of the governor balls, which is done by operating the arm shown on the right, whose ends are provided with loops, so that a cord may be attached, enabling the engineer to operate the governor from a distance.

The safety stop or stop motion is shown on the right, Fig. 3010.

It acts to close the governor valve and stop the engine in case the belt that drives the governor should get off the pulley or break. This stop motion consists of a pulley suspended by a rod, and riding on the belt which supports its weight. Should the governor belt break, this pulley falls and severs the connection between the valve and the governor, closing the valve and holding it closed.

Fig. 3011 shows the governor in section to expose the construction of the valve. The valve V is what is termed a poppet or poppet valve, which is balanced, because the steam entering at I

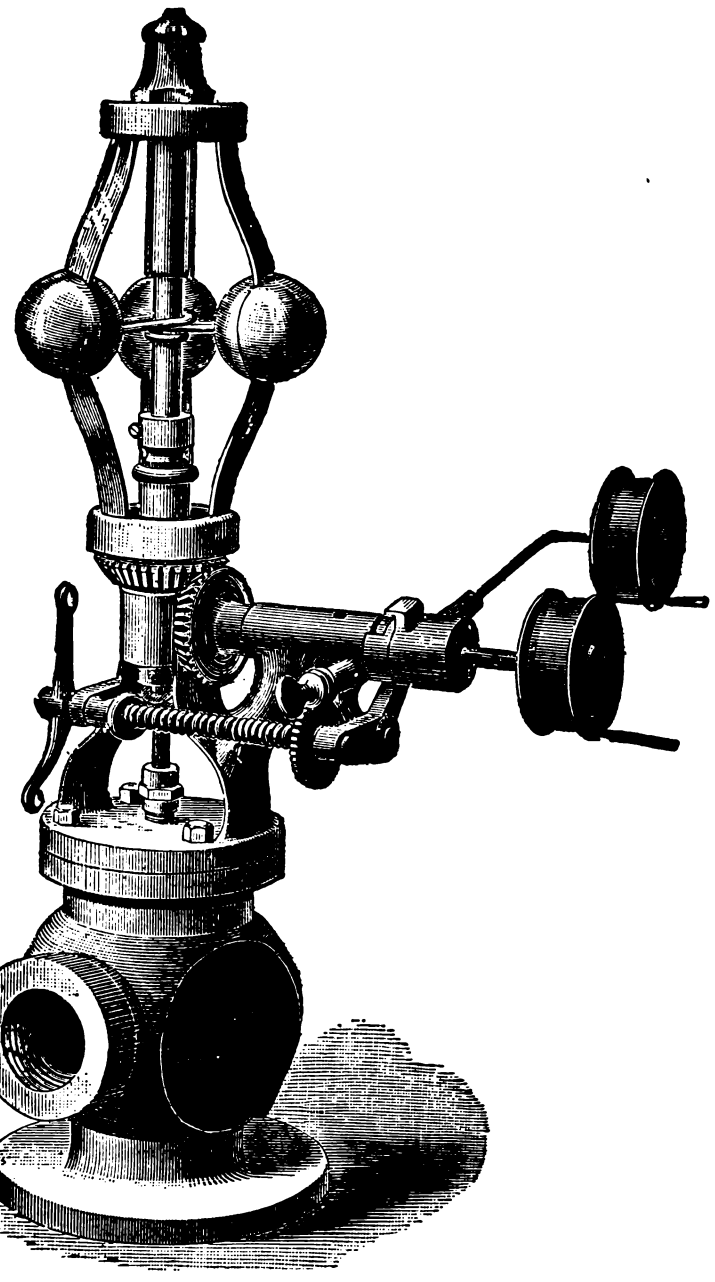

Fig. 3010.

and taking the course denoted by the arrows, acts equally on both ends of the valve and does not press it in either direction, while, as the steam surrounds the valve, it is not pressed sideways.

At B is a gland or stuffing box to keep the spindle or rod steam tight. At A is the slot for receiving the arm from the speeder and from the stop motion. P is obviously the driving pulley imparting motion to the bevel wheels G, which drive the outer spindle S, the inner spindle S′ being connected to A. The balls are upon ribbon springs D, which are secured at their lower ends to a link fast to the spindle S.

The centrifugal force generated by the balls causes them to move outwards, their upper ends pulling down the cap to which they are secured, and this cap operates the valve.

AUTOMATIC CUT-OFF ENGINES.—An automatic cut-off engine is one in which the valve gear is so acted upon by the governor as to keep the speed of the engine uniform under variations of the load the engine drives, and notwithstanding variations in the boiler pressure. This it accomplishes by automatically varying the point in the piston stroke at which the live steam is cut off. This is economical, because it enables the engine to use the steam more expansively than is possible with engines having throttling governors, which govern the engine speed by wire drawing the steam.

There are two principal forms of automatic cut-off engines—first, those in which the steam valve, spindle, or rod is released from the parts that move it to open for admission, while dashpots, weights, or springs close the valve to effect the cut-off; and second, those in which the travel of the valve is varied so as to alter the point of cut-off.

The first usually employ fly ball governors, which actuate cams or stops, or other devices, to trip the steam valves. The second usually employ shaft governors, or wheel governors, as they are sometimes termed.

The distinctive features in the action of the first, of which the Corliss engine is the most important, is that, as two admission and two exhaust valves are used, therefore the amount of the valve lead, the point of exhaust, and amount of the compression remain the same at whatever point in the piston stroke the cut-off may occur; whereas, in the second, the lead increases, the cut-off occurs earlier, and the compression increases in proportion as the cut-off occurs earlier in the piston stroke. In the Corliss engine the steam valve travels as quickly when opening the steam port for a short and early period of cut-off as it does for a late one; hence the amount of steam port opening is as full, with reference to the piston motion, for an early as it is for a late point of cut-off.

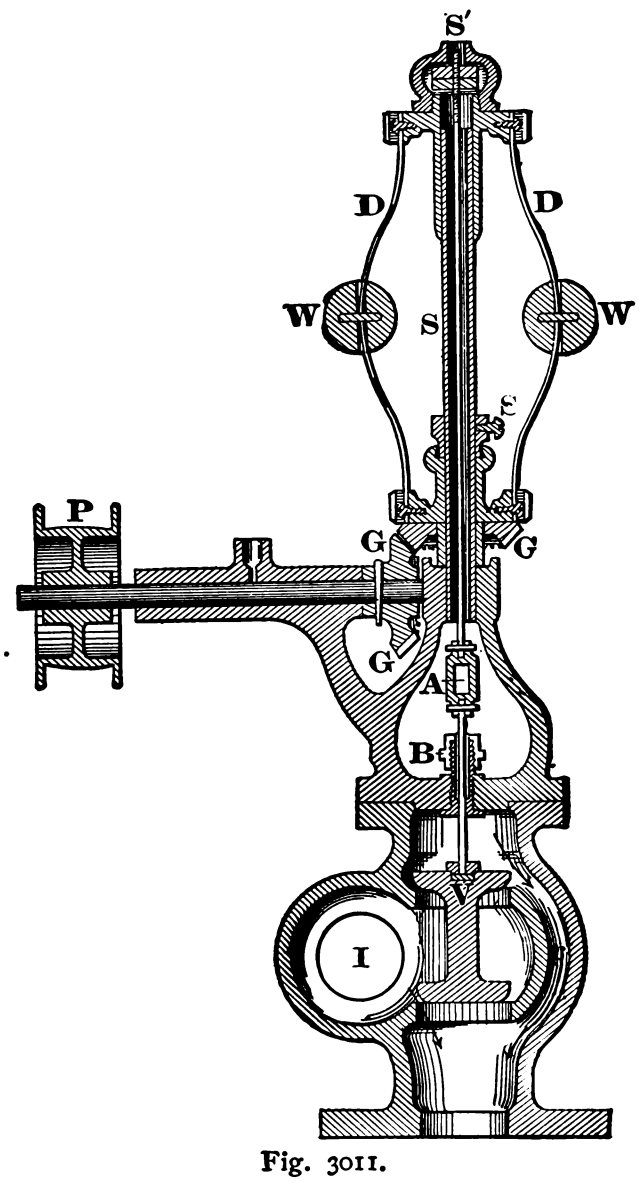

Fig. 3011.

In other words, there is the same amount of steam port openings let the point of cut-off occur at whatever point in the piston motion it may.

Figs. 3012 and 3013 are two views of a Reynolds-Corliss engine showing the general construction, details of which are shown as follows:

Fig. 3014 represents the valves and ports of a cylinder for a Corliss valve gear; *a* and *b* are the steam ports, and v and v^1 the steam valves; *c* and *d* are the exhaust ports, and v and v^2 their respective valves, and as the valves are placed close to the cylinder bore the passages are short, and the amount of clearance is reduced to a minimum.

Fig. 3012.

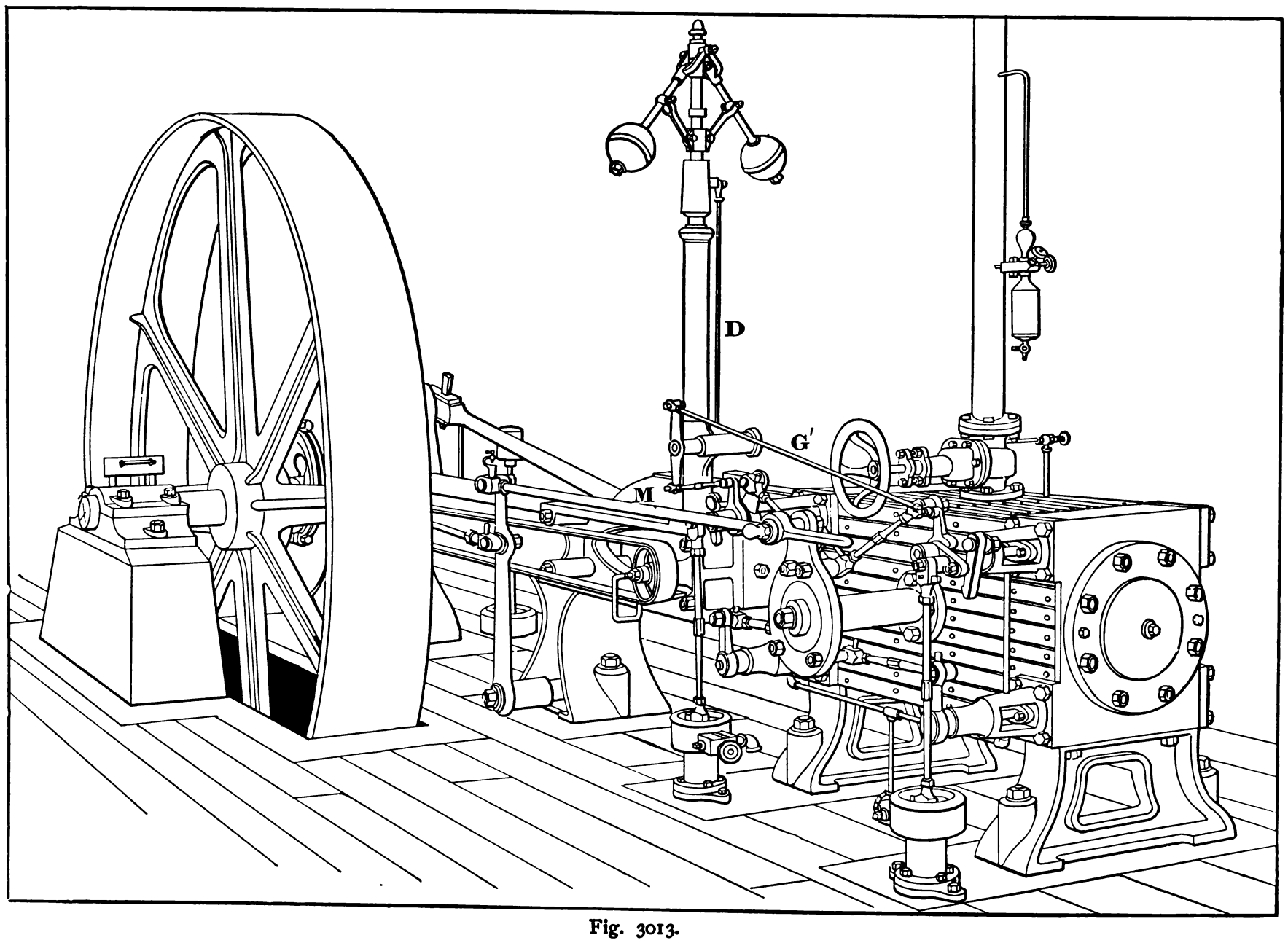

Fig. 3013.

The steam valves are opened quickly and fully whatever the point of cut-off may be, and are closed quickly no matter at what point in the piston stroke the cut-off may occur; hence a full supply of steam is obtained without wire drawing.

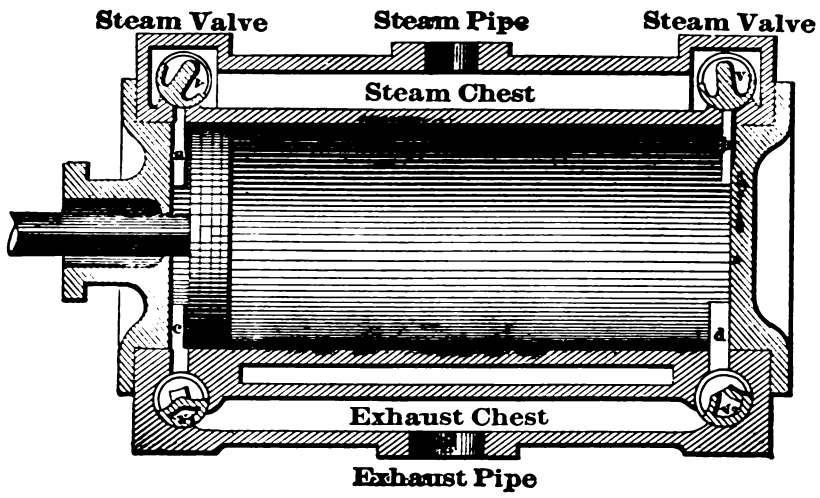

Fig. 3014.

The exhaust valves may be set to release the steam at any desired point in the stroke, and made equal or otherwise (as may be desired) for the two ends of the cylinder.

The lead of the steam valves may be regulated at will for each steam port independent of the other.

The distinctive feature of the Corliss valve gear is, that the point at which the cut-off shall occur is not determined by the lap or travel of the valve, but by mechanism in the gear that is so connected to the governor that it is the speed at which the governor revolves that determines the point at which the steam supply to the cylinder shall be cut off. Suppose, for example, the steam to be turned on and the engine started without driving any load; and the governor will run at its normal speed, the steam being cut off at, say, $\frac{1}{40}$ of the piston stroke. If then the load is put on as by starting a machine, then the governor will maintain its normal speed, but at the same time will act on the valve mechanism so as to let the steam follow the piston further in the stroke.

If another machine be started, so that the engine has still more load to drive, the governor will still maintain practically the same speed of revolution, but will act on the valve mechanism in such a way that the steam will be permitted to follow the piston during a still greater proportion of the stroke, and so on until the steam follows the piston as far as the amount of lap on the steam valve will permit it to do so, the engine being then at its maximum of power.

But at whatever point in the piston stroke the cut-off may occur,

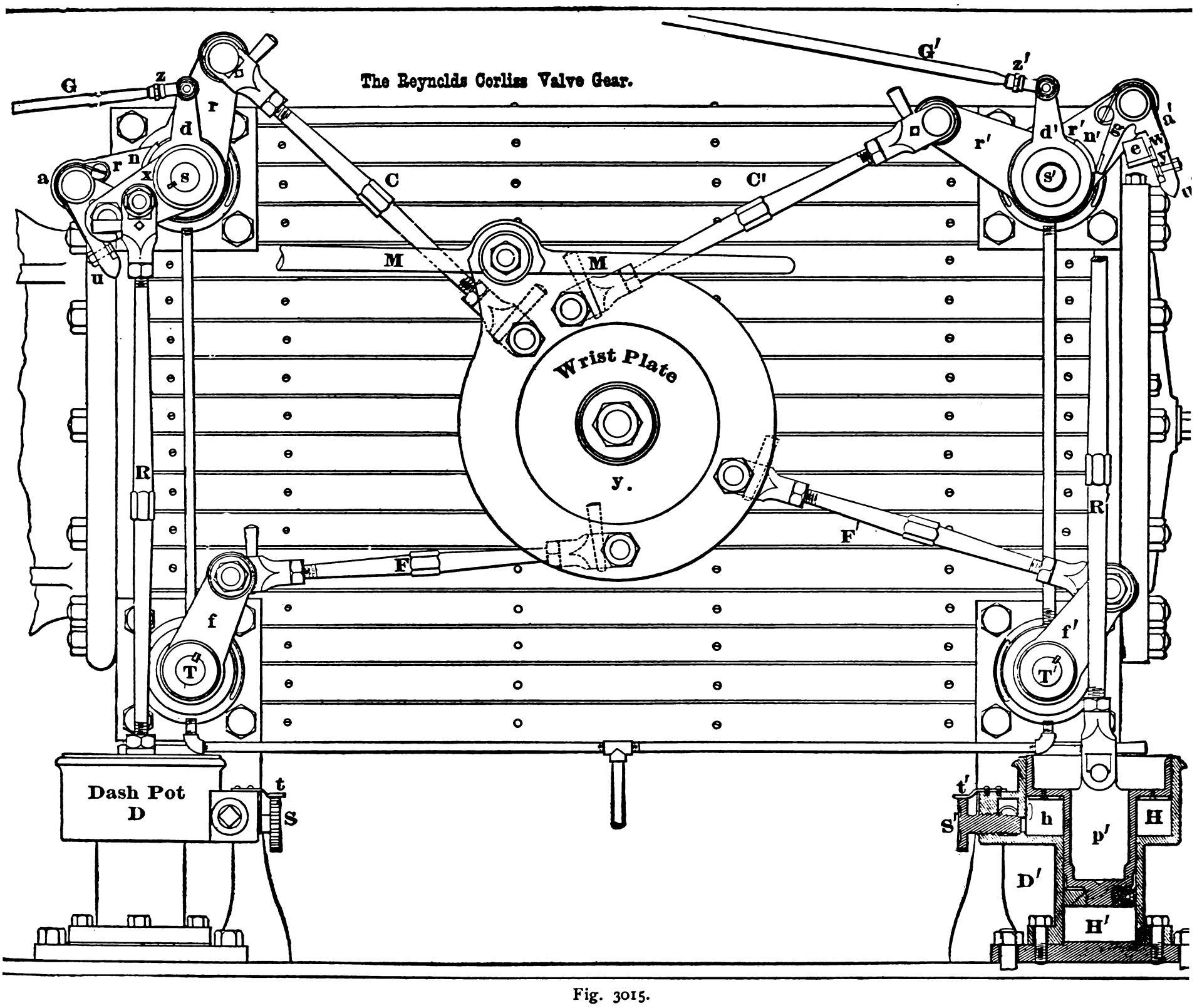

Fig. 3015.

the steam is not released until the piston has nearly completed its stroke, the point of release being determined by the designer, but remaining the same for all points of cut-off.

It will be seen, therefore, that the power of the engine is varied to suit that required by the amount of load the engine is to drive by varying the point of cut-off and using the steam expansively without releasing it too early, as is the case when a link motion or a shifting eccentric is used.

Referring to Fig. 3015, motion from the eccentric is imparted by the rod M to the wrist plate *y*, to which are connected the rods C C′ for operating the admission valves, whose shafts are seen at S S′, and the rods F F′ for operating the exhaust valves, whose shafts are seen at T T′.

The mechanism for the steam or admission valves may be divided into three elements: first, that for operating the valve to open the port for admission; second, that for closing the valve

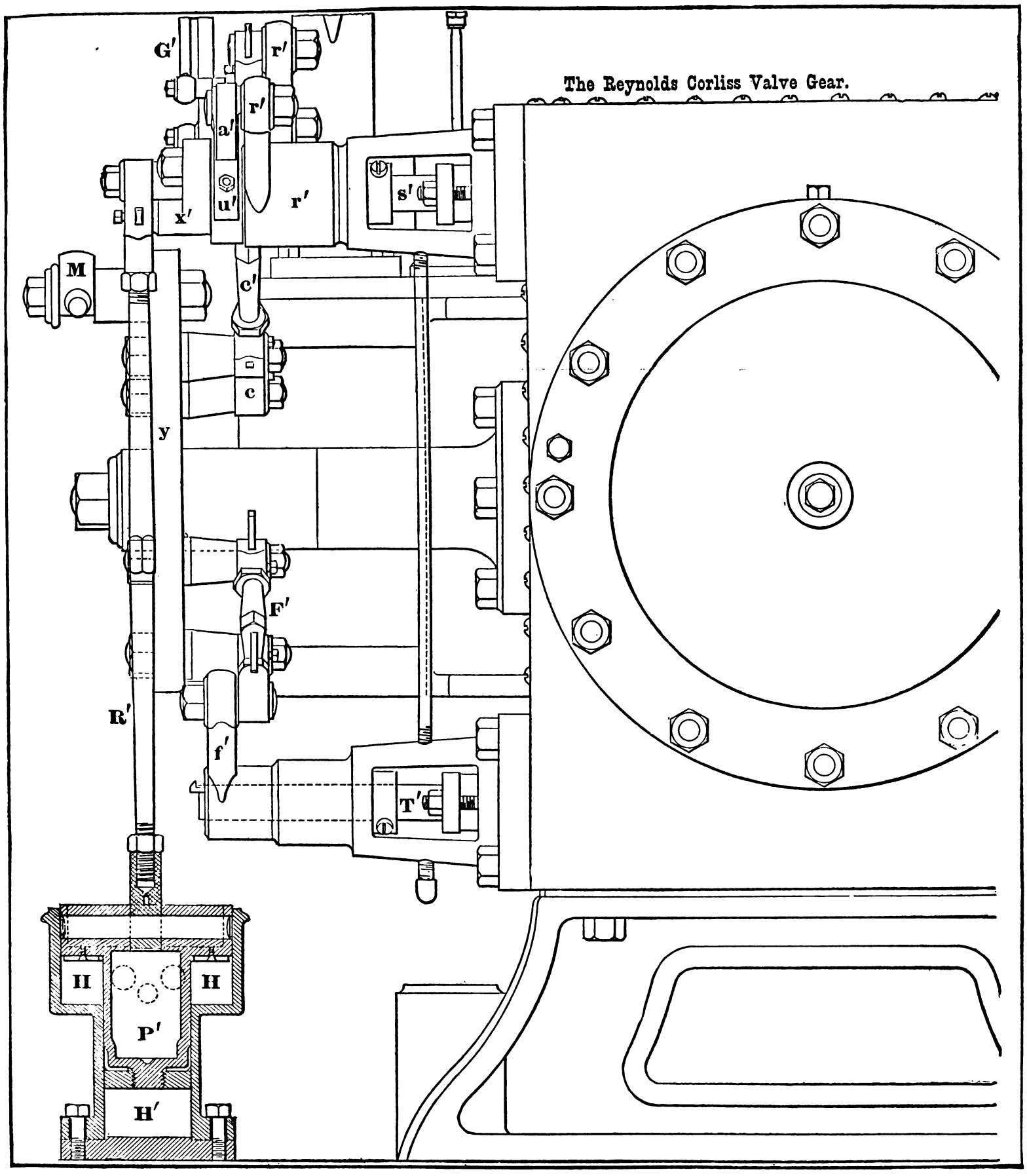

Fig. 3016.

The principles of a Corliss valve gear will be understood from the following, which is derived from a book by the author of this work, and entitled "Modern Steam Engines." In Figs. 3015 and 3016, the valve gear is represented with the parts in the position they occupy when the cut-off occurs at half stroke, the piston having moved from the head end of the cylinder. In Figs. 3017 and 3018, the parts are shown in position with the crank on the dead centre, and the piston at the crank end of the cylinder, valve *v* having opened its port to the amount of the lead.

to effect the cut-off; and third, that which determines the point in the stroke at which the cut-off shall occur.

The first consists of the rod M, wrist plate *y*, and the rods C and C′, which operate the bell cranks *r r*, *r′ r′*, which are loose on the valve shafts S S′. Upon the ends of bell cranks *r r*, *r′ r′*, are pivoted latch links *u u′*, which have in them a recess for the latch blocks, of which one is seen at *e* (the rod R′ and its connection with the valve stem being shown broken away to expose *e* to view). During the admission the latch block abuts against the

end y of the recess w and is tripped therefrom by the cam n'. The ends of arms g of the latch links abut against the hub of the arms $d\,d'$, upon which are cams $n\,n'$, and at $a\,a'$ are springs for keeping the ends g of latch links $u\,u'$ against the hubs and cams of $d\,d'$.

Referring now to the valve mechanism at the head end only, suppose the piston to be at the head end of the cylinder, and latch block e will be seated in the recess provided in u' to receive it, and as the bell crank moves, the latch block will be raised by the latch link, which is carried by a crank arm corresponding to that seen at x at the crank end of the cylinder, and as this crank arm is fast upon the valve spindle, the lifting of e will open the valve for admission. As soon, however, as the end g of the latch link meets the cam n', the latch link will be moved so that the end y of its recess will leave contact with the latch block e, and the dashpot will cause rod R′ to descend instantaneously and close the valve, thus effecting the cut-off.

THE ADMISSION.—The period of admission, therefore, is determined by the amount of motion the latch link u' is permitted to have before its end g meets the cam n', which trips the latch link and therefore frees e from the latch link recess.

The point at which the cut-off will occur, therefore, is determined by the position of the cam n', because if n' is out of the way, the end g of the latch link will not meet it; the latch link will not disengage from the latch block e, and the cut-off will be effected by the lap of the valve, and independently of the dashpot. As in Fig. 3015, the parts are shown in the positions they occupy at the

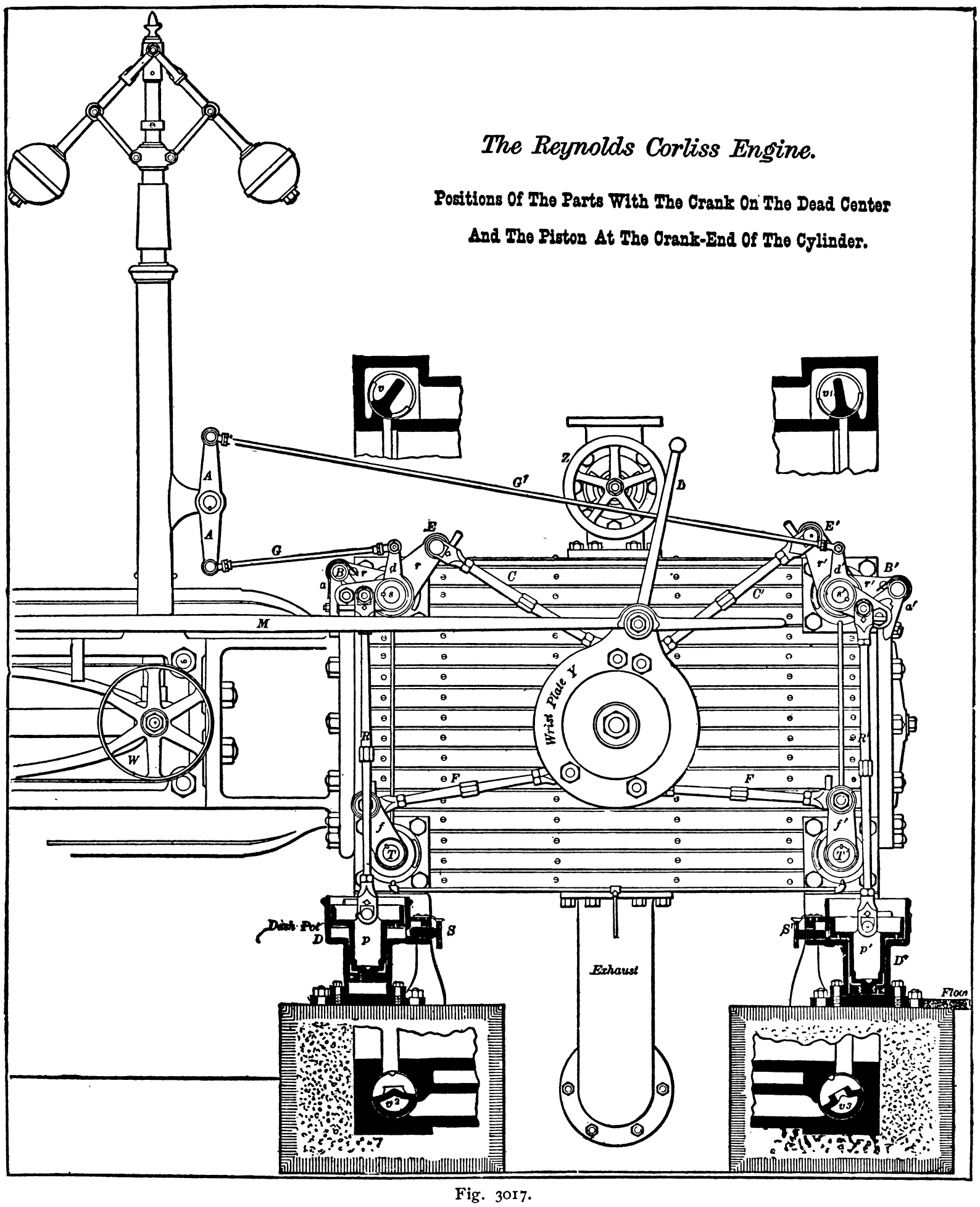

Fig. 3017.

instant the cut-off is to occur, therefore the cam n' has just tripped the latch link, and the end of e has just left contact with the end y of the recess w in the link n'.

The point in the stroke at which the tripping of u' from e will occur and effect the cut-off is determined by the governor, because d' is connected to the governor through the rod G'. In proportion as the governor balls rise, d' is moved from left to right, and the end of cam n' meets g earlier, or *vice versa*, in proportion as the governor balls fall, the arm d' is moved to the left, g will meet the end of cam n' later, and the point of cut-off will be prolonged.

We now come to the means employed to close the valve quickly and without shock when the latch block is released from the latch link. Referring then to the crank end of the cylinder, the latch block for that valve is carried upon arm x, to which is attached the rod R from the dashpot piston (the arm corresponding to x, but at the head end, being shown removed to expose the latch block to view). We may now turn again to the head end of the cylinder, rod R' corresponding to rod R at the other end, and it is seen that R' connects to a dashpot piston p', having a stepped diameter, the lower half fitting into bore H', and the upper half into a bore H. The piston p' fits the bore H' and fills it when the rod R is at the bottom of the stroke; hence, as p' is raised, there is a vacuum in H' that acts to cause p', and therefore R' and x, to fall quickly and close the valve the instant the latch block is released from the latch link. To prevent the descent of rod R' and piston p' from ending in a blow, a cushion of air is given in H by the following construction:

At S and S' are valves threaded to screw and unscrew, the ends forming a valve for a seat entering H. As the rod R' and its piston p' descends, the air in H finds exit through a hole at h, until that hole is closed by the piston p' covering it, after which the remaining air in H can only find exit through the opening left by the end of the valve S', and this amount of opening is so regulated by the adjustment of S', that a certain amount of air cushion is given, which prevents p' from coming to rest with a blow. The head of valve S' is milled or knurled, and a spring t' fits at its end into the milled indentation, thus holding it in its adjusted position. The under surface of the upper part of p' is covered by a leather disc, while the part that fits in H' is kept air-tight by a leather capped packing.

THE GOVERNOR CONNECTION.—The connection of the cam arms d and d' with the governor is shown in Figs. 3017 and 3018, in which the parts are shown in the position they would occupy when the crank is on the dead centre and the piston at the crank end of the cylinder. The rod G' connects the cam arm d' with the upper end of lever A, which is connected to the governor, and vibrates on its centre as the governor acts upon it.

Now, suppose the speed to begin to diminish and the governor balls to fall, and the direction in which A will move will be for its lower end to move to the right, thus moving d' to the right and carrying its cam away from the end of the latch link, which will therefore continue to open the port for a longer period of admission. Or, referring to Fig. 3015, it is plain that if the governor balls were to lower from a reduced governor speed, G' would move to the left and cam n' would be moved away from contact with the end g of the latch link, which, not being tripped, the admission would continue. On the other hand, suppose the governor balls to rise from an increase of governor speed, and d', Fig. 3015, would be moved to the right, and the cam n' meeting g earlier would trip e earlier, correspondingly hastening the cut-off.

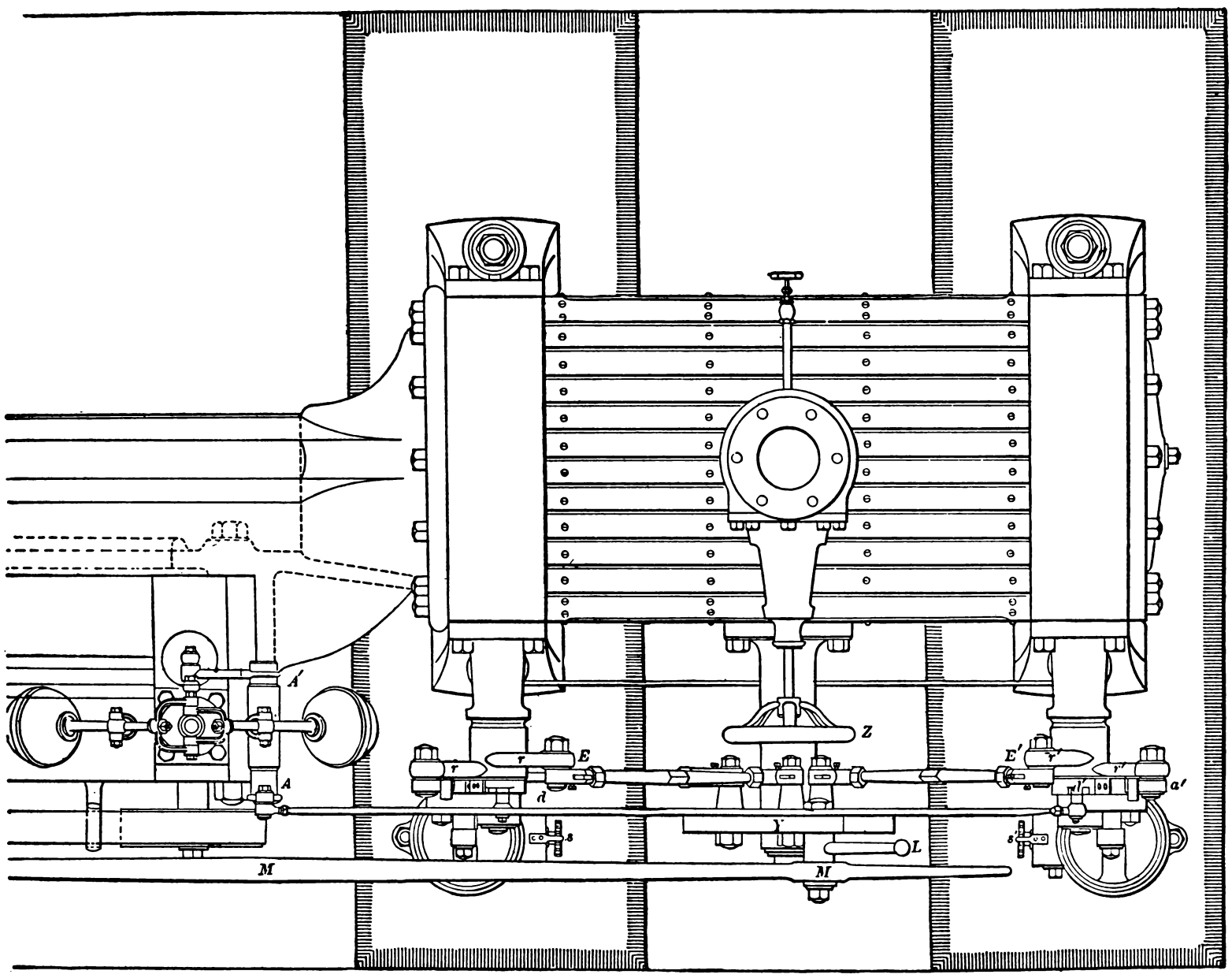

Fig. 3018.

The governor is driven by a belt from a pulley on the crankshaft to the pulley W, Fig. 3017, whose shaft conveys motion to the governor spindle through the medium of a pair of bevel pinions.

THE CONSTRUCTION OF THE VALVES.—The construction of the valves is shown in Fig. 3017, in which v represents the steam or admission valve for the crank end port, and v^1 that for the head

end port, while v^2 is the exhaust valve for the crank end, and v^3, that for the head end of the cylinder. All four valves are shown in the positions they would occupy when the crank was on the dead centre, and the piston at the crank end of the cylinder; hence the valve positions shown correspond to the positions the parts of the valve motion occupy in the figure.

The faces of the valves are obviously arcs of circles, of which the axes of the shafts marked *s s'*, T T', are the centres. Valve *v* has opened its port to the amount of the lead, which in this class of engine varies usually from $\frac{1}{32}$ to about $\frac{1}{16}$ of an inch. As separate exhaust valves are employed, the point of release, and (as the same valve edge that effects the release also effects the compression), therefore, that of the compression, may be regulated at will, by adjusting the lengths of the rods F F', which have at one end a right, and at the other a left hand screw, so that by turning back the check-nuts and then revolving the rods, their lengths will be altered.

Similarly, the amount of admission lead may be adjusted by an adjustment of the lengths of rods C C', which also have right and left hand screws.

Referring now to the admission valve *v*, it is seen that its operating rod C is at a right angle to bell crank *r r*; hence the amount of valve motion will not be diminished to any appreciable extent by reason of the wrist plate end of rod C moving in an arc of a circle, and the point of attachment of rod C to the wrist plate is such that, during the admission, the valve practically gives as quick an opening as though rod C continued at a right angle to *r*. But if we turn to valve *v'*, which has closed its port and covers it to the amount of the lap, we find that bell crank C' and its operating rod C' are in such positions, with relation to the wrist plate, that the motion of the latter will have but little effect in moving the bell crank *r'*. This is an especial feature of the Corliss valve motion, and is of importance for the following reasons: The lap of the valve (which corresponds to the lap of a plain D slide valve) is usually, in this class of engine, such as to cut off the steam at about $\frac{7}{8}$ stroke, but the adjustment of the cam position is usually so made, that from the action of the governor, the latest point of cut-off will occur when the piston has made $\frac{5}{8}$ of its stroke, the range of cut-off being from this to an admission equal to the amount of the lead.

As the eccentric is fixed upon the shaft, the speed at which the valve opens the port for the admission is the same for all corresponding piston positions. Thus suppose the piston has moved an inch from the end of the stroke, and the valve speed will be the same, whether the cut-off in that stroke is to occur at quarter stroke or half stroke, and as the valve continues to open the port until it is tripped, therefore, at the moment it is tripped, the direction of valve motion must be suddenly reversed.

As the duty of its reversal falls upon the dashpot, it is desirable to make this duty as light as possible, which is accomplished by the wrist motion, which acts to reduce the valve motion after the port is opened a certain amount for the admission.

We have, therefore, that during the earlier part of the admission, the port opening is quick, because of the eccentric throw being a maximum, while during the later part of the port opening, this rapid motion is offset or modified by the wrist motion, thus lessening the duty of the dashpot and enabling it to promptly close the valve.

VARYING THE ENGINE SPEED.—The range of governor action, so far as the governor itself is concerned, is obviously a constant amount, because a certain amount of rise and fall of the governor balls will move the cams a given amount. But the range of cut-off may be varied as follows:

At Z Z, Fig. 3015, are adjustment nuts, by means of which the lengths of rods G G' may be varied.

Lengthening rod G, obviously moves arm *d* and its cam *n* further from the end of latch link *u*, and therefore prolongs the admission period.

Shortening the rod G' causes cam *n'* to move around and away from the leg *g* of the latch link, and prolongs the admission.

The adjustment of the lengths of G and G' may therefore be employed for two purposes: first, to prolong the point of cut-off and maintain the speed when the engine is overloaded; second, to hasten the point of cut-off for a given engine speed, and thus adjust the engine for a lighter load.

SHAFT GOVERNORS.—Instead of employing a link motion to alter the amount of valve travel and vary the amount of expansion, the valve gear may be so constructed as to move the position of the eccentric upon the crankshaft, reducing its effective throw, and therefore, the amount of valve travel.

This is usually effected by means of shaft governors, which automatically shift or move the eccentric across the crankshaft the instant any variation of engine speed occurs.

The principles of construction of a shaft governor or wheel governor, as it is sometimes termed, will be understood from Fig.

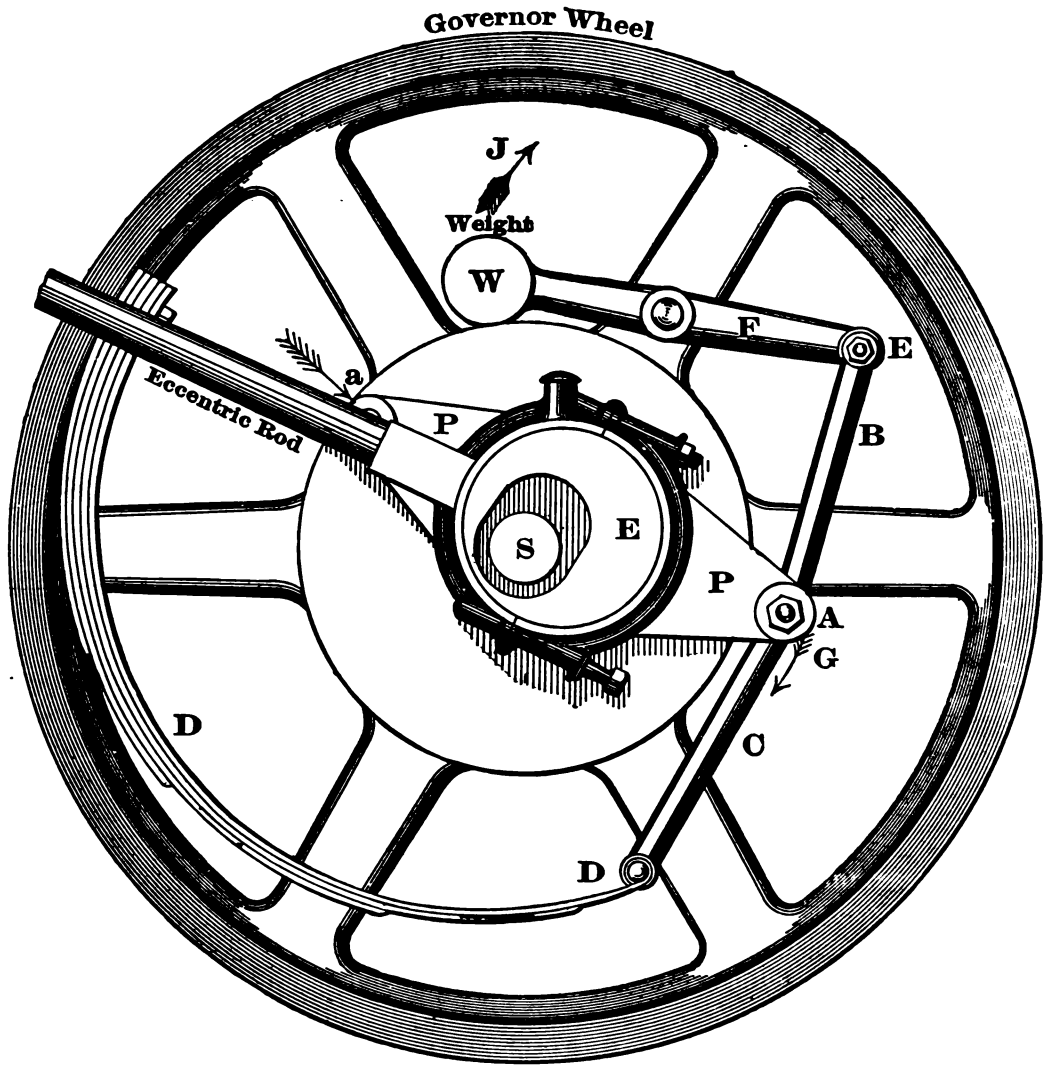

Fig. 3019.

3019, in which S is the crankshaft, fast upon which is the governor wheel. The eccentric is free from the crankshaft, being mounted in a plate P P, which is pivoted at *a* to the hub of the governor wheel (which may be the flywheel of the engine), and is, therefore, driven by it. The other end of the plate or frame P is pivoted at A to the links B and C, the latter being connected at D to a spring. B is pivoted at E to an arm F, which is pivoted to one of the spokes of the governor wheel and is provided with a weight W. The eccentric E is carried by the hanger P.

Now, suppose the links B and C to be disconnected from P, and it would be possible to take hold of the end A of P and swing it upon its pivot *a* and thus move the eccentric across the crankshaft. When the parts are connected, however, as in the figure, and the engine is at rest, the spring D D holds the hanger P, and, therefore, the eccentric in the position shown in the cut, which is that for the longest point of cut-off, the eccentric having its greatest amount of throw and the valve its maximum of travel. So soon, however, as the governor wheel revolves, the weight W is caused by centrifugal force to move outwards, as denoted by

the arrow J. The amount to which this movement will occur depends upon the speed of revolution of the governor wheel, since the movement increases as the revolution speed increases. The effort of the weight W to swing outwards is resisted by the tension of the spring D D. The movement outwards of the weight W causes the hanger P to swing in the direction of arrow G, moving the eccentric across the shaft, reducing its throw, and, therefore, hastening the point of cut-off. The weight W and the strength of the spring D are so proportioned, that when the engine has attained its required speed of revolution, enough centrifugal force is generated by the weight to hold the spring in equilibrium and maintain a uniform speed of engine revolution.

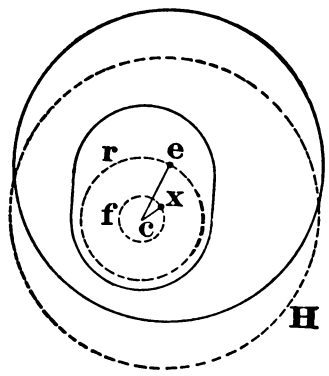

Fig. 3020.

When the load the engine drives increases, and engine revolution decreases, the decreased centrifugal force of the weight permits the spring to pull the eccentric across the shaft and admit more steam; while, on the contrary, when the engine load decreases, and the speed of revolution begins to increase, the increased centrifugal force overcomes the resistance of the spring, and the eccentric is moved to cause an earlier point of cut-off. Thus a constant relation is maintained between the load of the engine, the tension of the spring, and the centrifugal force of the weight, and a practically uniform rate of engine revolution is maintained.

In the ordinary construction of shaft governors we are met with the difficulty that the valve lead cannot be made equal for the two piston strokes, which may be explained as follows :

In Fig. 3020 is shown an eccentric allotted to serve on a shaft governor.

The circle *r* represents the path of the centre of the eccentric when moved to its position of greatest throw, as shown in the full lines, the centre of the eccentric being at *e*. The circle *f* represents the path of the centre of the eccentric when shifted to its position of least throw, as denoted by the dotted circle H, the centre of the eccentric being at *x*. The circles *r* and *f*, Fig. 3021, correspond to circles *r* and *f* in Fig. 3020, the radius C *x* representing the lap of the valve.

The valve is shown to have no lead, the eccentric rod R being shortened for convenience of illustration ; the crank is supposed to be on its dead centre at B. Now suppose the eccentric rod R to be pivoted on the valve, the other end being disconnected, and if we move it across the outer circle (which represents the path of the eccentric centre when at its greatest throw), the centre of the eccentric strap bore will move in a path denoted by the line from *e d*. During the part of this line that runs from *e* to *x* the throw of the eccentric will be reduced and the cut-off hastened, the engine running in the direction denoted by the arrow; but after the eccentric has passed the line *x*, the valve would be in position for the engine to run in the opposite direction, its throw increasing as it is moved towards the point *d*.

As the valve and crank have remained motionless while the eccentric rod was moved across the shaft to mark the line *e d*, it is clear that so far as this crank position (B) is concerned, the eccentric may be shifted to any position between *e* and *d* without altering the valve lead. When the engine has made a half revolution, and the crank has reached D, as in Fig. 3022, the port *b* being about to open for the live steam, and supposing the eccentric rod to be pivoted to the valve as before, and the valve and crank to remain at rest, then the centre of the eccentric strap, in being moved across the shaft, will move in a path denoted by the line *e' d'*. But while the crank moved from B to D, the line *e d*, Fig. 3021, has moved to the position shown in Fig. 3022, and it becomes evident that the port *b* would be given an amount of lead represented by the distance between *e* and *e'*.

This amount will obviously diminish as the eccentric is shifted across the shaft towards the position *x* of least throw, until, on arriving at *x*, the arcs *e d* and *e' d'* coincide. It is obvious, however, that the longer the eccentric rod is, the nearer the arc *e d* would approach to a straight line, and as it approached a straight line the distance *e e'* would be less and the lead variation would also be less ; while if the eccentric rod was infinitely long, so as to make *e d* a straight line, the lead would be equal for the two ports.

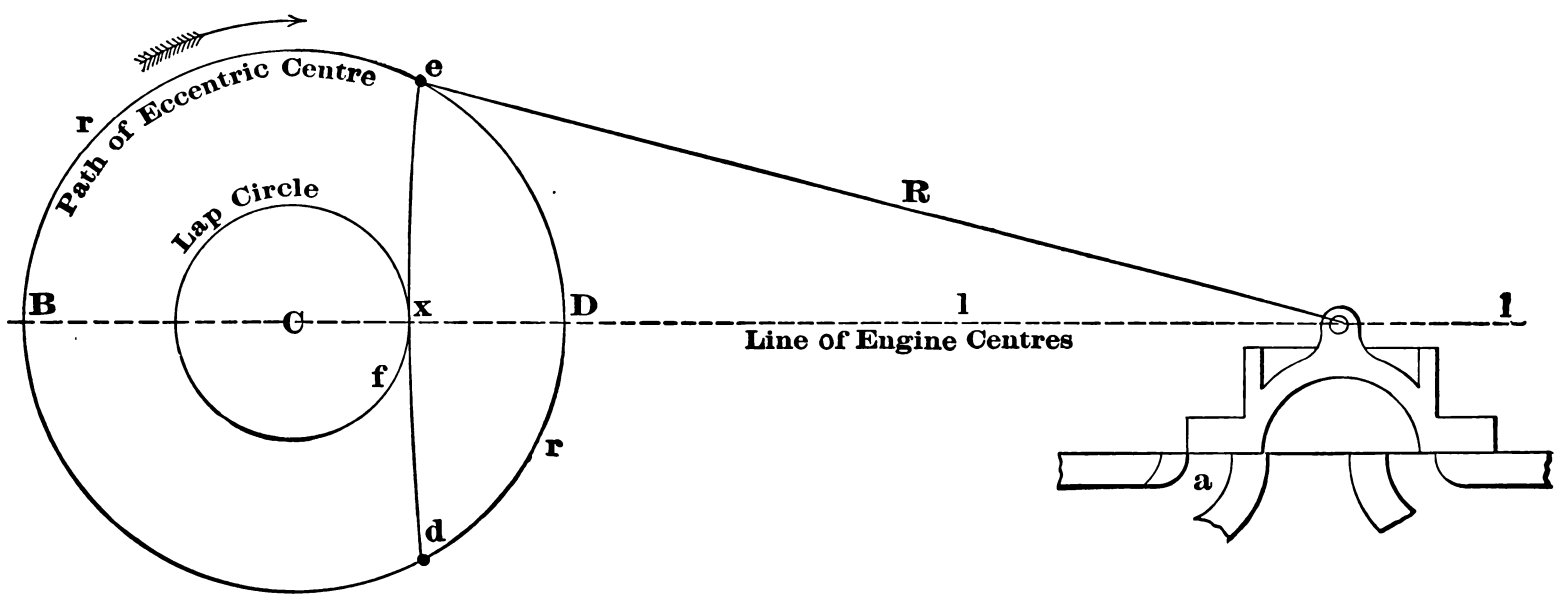

Fig. 3021.

The eccentric is also attached to a hanger or plate that swings on a centre, and it is obvious that the longer this hanger is, the nearer the arc *e d* will be to a straight line, and the less the distance *e e'* and the lead variation will be.

For the purpose of considering the lead variation, due to swinging the eccentric across the shaft in an arc of a circle, it is sufficient to suppose the eccentric rod and hanger to be of equal lengths. The amount of lead variation thus shown to accompany the shifting of the eccentric across the shaft, will obviously increase in proportion as the range of cut-off is increased. In order to make the lead variation show plainly in the figures, the length of the eccentric rod has been taken as equal to but six times the amount of the valve travel, and as the eccentric hanger has been taken as of the same length, the same radius serves for arc *e d* and *e' d'*. In Fig. 3023, the valve is supposed to have lead, the arc *g* being distant from circle *f* to the amount of the valve lead, and therefore distant from C to the amount of the lap and the lead.

With the crank at B, the eccentric centre, when in its position of greatest throw, will be at *e*, and the cut-off will occur when it

has arrived at *d*. This is clear, because if we placed the valve in position at cut-off and moved the strap end of the eccentric rod across the shaft, its centre would move in the arc from *f* to *d*.

It will, therefore, be perceived that whatever position the centre of the eccentric may be shifted to, between the points from *e* to the line of centres, the cut-off will occur when the eccentric centre passes the line *f d*. Similarly, when the crank is at D, and the port *b* is open to the amount of the lead, the eccentric centre ought to be (if the valve is to have equal lead) at *e'*, but it will, for reasons already explained with reference to Fig. 3022, be at *e''*; hence the lead will be greater for port *b* than for port *a*.

of the eccentric rod as a radius, and from the centre of the valve, when the latter is in position ready to open port *a* for the lead, and therefore, represents the path in which the eccentric must move across the shaft in order to maintain equal lead for all points of cut-off on this piston stroke. But the path in which the eccentric would actually move (its point of suspension being on the line *m*) is shown by the arc *e' x'*, and it is seen, whatever the amount of lead at *e'*, it will increase, as the eccentric is shifted towards *x'* for the earlier cut-offs. The amount of difference in the lead will obviously depend upon how far distant the point of eccentric hanger suspension is located away from the line of engine centres.

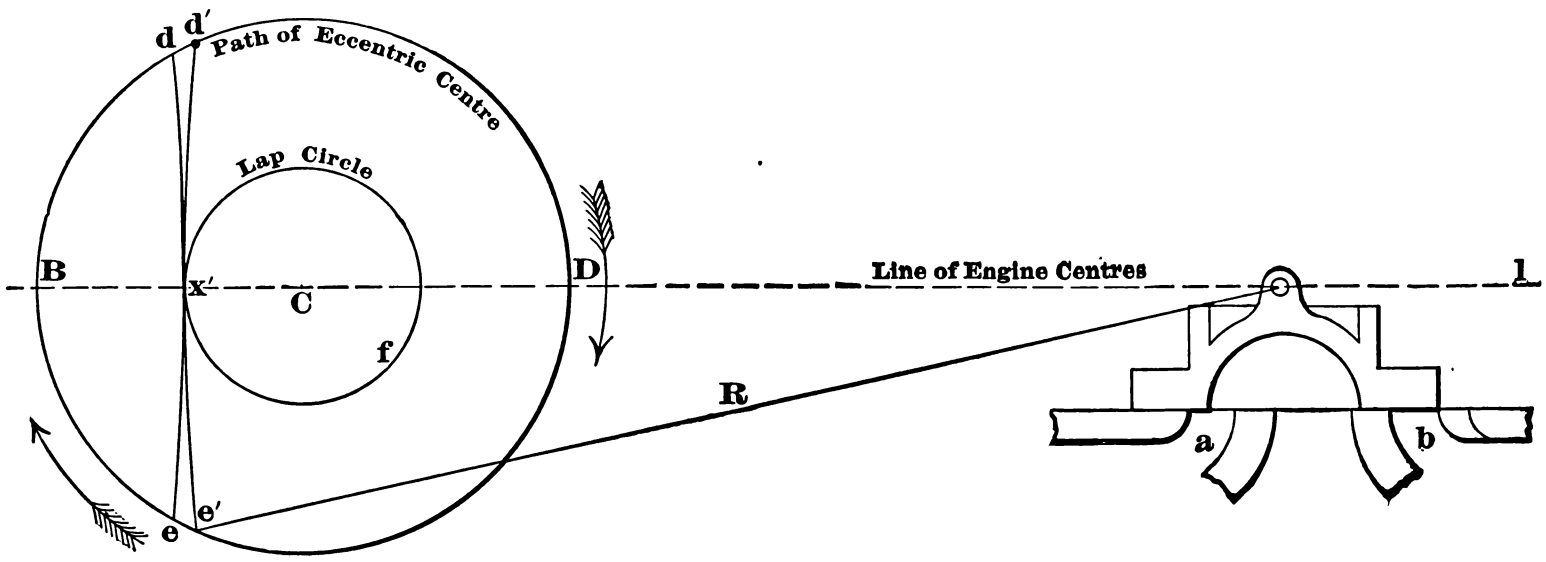

Fig. 3022.

The cut-off, however, will occur when the eccentric centre crosses the arc from *f* to *d'*, this arc being the path that would be described by the centre of the eccentric strap if the eccentric rod was pivoted to the valve, and its strap end moved across the shaft. It follows, therefore, that the cut-off will be later for the stroke when the piston is moving from the head end to the crank end, and it is also seen that as the two arcs *e'* and *e''* coincide on the line of the centres, therefore the lead will be diminished in proportion as the eccentric is moved towards the line of centres for

Turning, next, to the stroke when the piston is moving from D to B and the port *b* is taking steam, the arc *e'' x''* being struck from the line of centres *l* of the engine, and with a radius equal to the length from the centre of the cylinder ports to the centre of the crankshaft is, as in previous examples, a line parallel to which the eccentric must move in order to keep the lead equal on this stroke for all points of cut-off. To find the line in which it will actually move, the line *m m* must be prolonged to the left hand of the figure, and from a point on this line, and with the length of

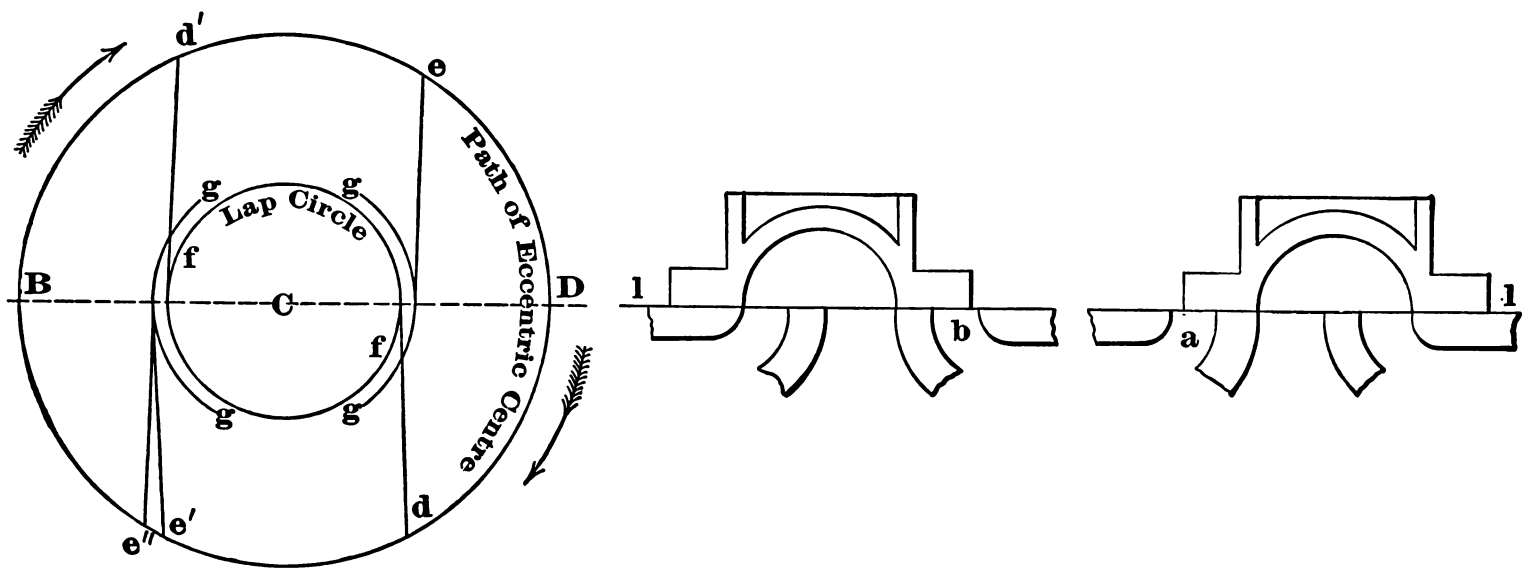

Fig. 3023.

earlier cut-offs, and will be all taken up when the eccentric is at its inner position for the shortest cut-off.

Instead, however, of shifting the eccentric from a pivot or pin situated on the line of engine centres, we may do so from a pin or a line *m m*, Fig. 3024, at an angle to the line of centres, which will reduce the valve lead for the longest point of cut-off, and either increase the lead at early cut-off for both strokes, or for the head end port only, according to the angle of the line *m m* to the line of centres.

Thus, in Fig. 3024, the eccentric is supposed to be shifted across the shaft from a point or pivot on the line *m m*.

The arcs *g g* have a radius from the centre C equal to the amount of lap of the valve. The arc *e x* is drawn with the length

the eccentric hanger as a radius, the arc *e''' x'''* may be drawn, this being the arc on which the eccentric will actually move when shifted across the shaft, which may be seen as follows:

Suppose the crank to be at D, and the point of eccentric suspension to be on the line *m* to the left of the figure, and if a pencil be inserted in the centre of the eccentric and the eccentric hanger were operated by hand, then the pencil point would mark or describe the arc *e''' x'''*. For this stroke, therefore, the amount to which the lead will vary as the eccentric is moved from its outermost to its innermost position is that represented by the difference of the distance between *e''* and *e'''* and *x* and *x'''*. The variation in the amount of the lead, for the two ports, is shown, for the longest point of cut-off, by the difference in distance between the points

e and *e'* and that between *e''* and *e'''*, while, for the shortest points of cut-off, it is shown by the difference between the points *x x'* and *x'' x'''*.

TO FIND THE PISTON POSITION FOR A GIVEN ECCENTRIC POSITION.—In Fig. 3025, the arc *f* has a radius equal to the lap of the valve, and circle *g* a radius equal to the lap and the lead, and it follows, from what has already been explained, that with the crank at B, and the valve open to the amount of the lead, the eccentric, when at its greatest throw, will be at *e*, and the cut-off will occur when it arrives at *d*. As the crank will move through the same number of degrees of arc that the eccentric does, we may hence the arc moved through by the eccentric from the beginning of the piston stroke to the point of cut-off, is the arc *v t*. To find the position of the crank at the point of cut-off, we take the radius *v t* from B', on circle *u* at the line of centres, and mark an arc G. A line from the centre C, and cutting the point of intersection of arc G with circle *u*, gives at *h* the position of the crank at the point of cut-off. An arc whose radius represents the length of the connecting rod, and whose centre is on the line of engine centres, gives at *m* the position of the piston at the point of cut-off.

If the eccentric be moved further across the shaft to the position represented by *w* the path of its centre will be on the circle

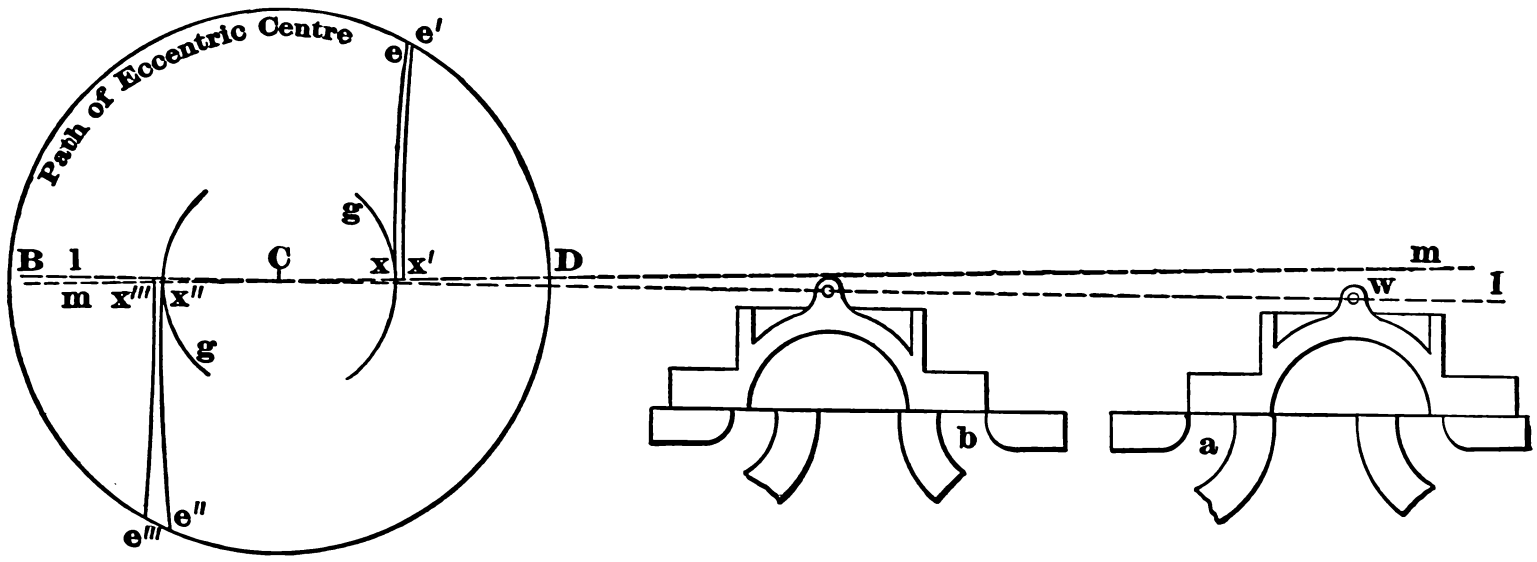

Fig. 3024.

set the compass to radius *e d*, and mark, from B, the position H of the crank at the point of cut-off.

To find the corresponding piston position, we set a pair of compasses to represent the length of the connecting rod on the same scale that the outer circle B D represents the path of the crankpin, and from a point on the line of centres *l l* of the engine, mark from H an arc, giving *s* as the position of the piston at the point of cut-off. Suppose, for example, the engine stroke was 24 inches; therefore the outer circle *r*, being $2\frac{1}{2}$ inches, will represent the path of the crankpin on a scale $\frac{1}{8}$ full size, or $\frac{1}{8}$ per inch.

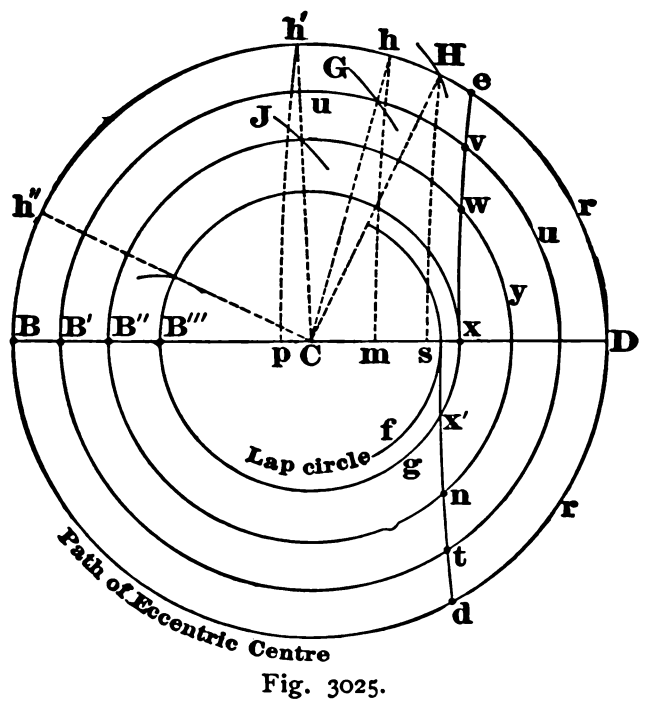

Fig. 3025.

Supposing the connecting rod to bear the proportion of three times the length of the piston stroke, and its length to be 72 inches; hence the radius of the arc H*s* will be 72 eighths of an inch, or 9 inches. Then, as the distance from B to *s* is $1\frac{7}{8}$ inches, we multiply this by 8 and get 15 inches as the piston position at the point of cut-off.

If now the eccentric be moved to position *v*, its path will be on the circle *u*, and the cut-off will occur when the eccentric arrives at *t*, because at that time the valve will be moved from its mid position to an amount equal to the amount of the steam lap; *y*; and to find the position of the crank when the cut-off occurs, we take the radius *w n*, and from B'', where circle *y* crosses the line of centres, mark an arc J, and the line from C, passing through the intersection of J with circle *y*, gives at *h'* the crank position at the time the cut-off occurs, while the arc from *h* gives at *p* the corresponding piston position.

We have now to consider the earliest point at which the cut-off can be effected; hence let it be supposed that the eccentric centre is moved to position *x*, and the crank being on its dead centre at B, the port will be open to the amount of lead, and as the cut-off will occur when the eccentric reaches *x'*, we take the radius *x x'*,

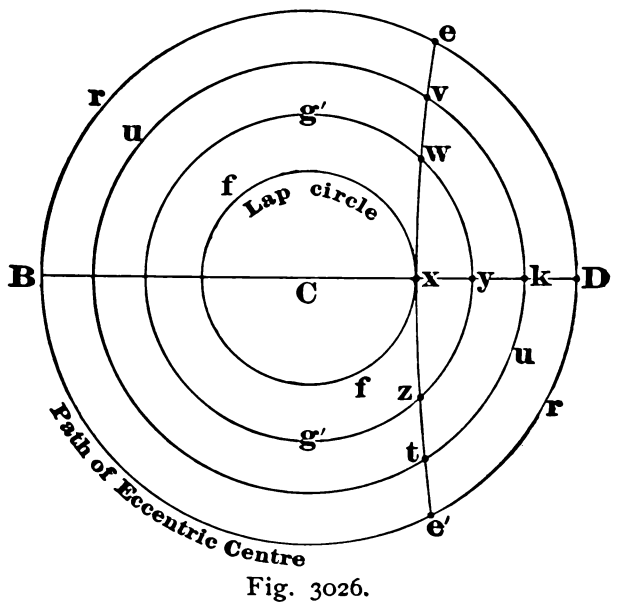

Fig. 3026.

and mark it from B''', obtaining by the same lines as before the crank position *h''*. It is obvious, however, that if the valve had no lead, there would be no admission, because when the crank was on its dead centre B, the port would be blind, and as soon as the crank moved, the valve would move back further over the port.

To find the amount of steam port opening for each point of cut-off, in Fig. 3026 the outer circle represents the path of the eccentric centre when at its greatest throw, while the circle *f f* has a radius equal to the steam lap of the valve.

Now, suppose the path of the eccentric centre to be on the circle *r r*, and when it is at *e*, the valve will have moved from its

mid position to the amount or distance C x; the point x will, therefore, represent the edge of the steam port and the edge of the valve when the eccentric is at e.

While the eccentric is moving from e to D, it is opening the port; hence the maximum amount of port opening may be measured from x to D. If the valve has no overtravel, the maximum port opening will be the radius from x to D, when the eccentric path is on the circle $r\ r$. But suppose the eccentric path to be on the circle $u\ u$; then the maximum port opening will be equal to the radius $x\ k$; or, if the eccentric path be on circle g', then the maximum amount of steam port opening will be represented by the radius $x\ y$. The area of port opening will obviously depend upon the dimensions of the ports and upon whether the valve is double or single ported.

THE POINT OF ADMISSION.—If the valve has no lead, the admission occurs when the crank passes the dead centre; but if the valve has lead, the point of admission may be found as follows:

In Fig. 3027, the outer circle represents the path of the crankpin and that of the eccentric as before. Circle f has a radius equal to the amount of valve lap, and circle g a radius equal to the lap and the lead.

When the crank is at B, and the valve open to the amount of the lead, the eccentric, when set for the latest cut-off, will be at e, and as the cut-off will occur when it reaches point d, therefore the arc it moves through, while the crank moves from the dead centre B to the point of cut-off, is the length of the arc $e\ d$; hence we take this distance, and from e (where the eccentric will be

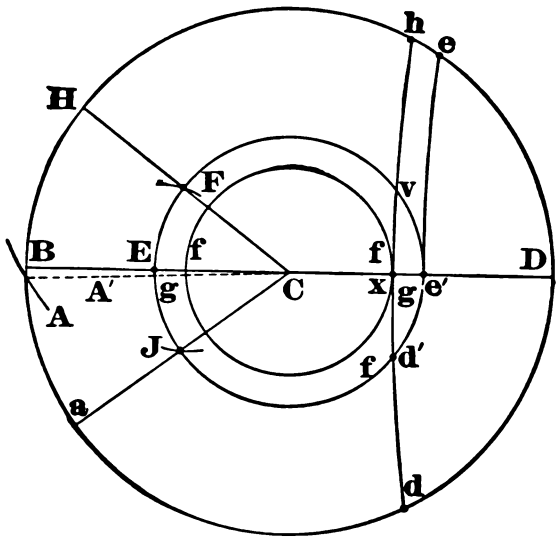

Fig. 3027.

when admission occurs) mark arc A, and a line A', drawn from the intersection of A to the centre C, represents the crankpin position at the point of admission for the latest point of cut-off.

Now suppose the eccentric to be moved to e' for the earliest cut-off, and the length of arc it will move through from admission to cut-off, is from v to d', and as it will move through half this arc, or from v to e', while opening the valve to the amount of the lead, and the other half while closing it, we take the radius $e'\ d'$ (half $v\ d'$), and from point E, where circle g cuts the line of centres, mark arcs J and F, and then draw lines H C and a C, and line a C will be the crank position at the point of admission, while H C will be its position at the point of cut-off.

This is clear, because arc $v\ e'$ equals arc E J, and arc E F equals arc $e'\ d'$.

It is seen, therefore, that if the valve is given lead, then in proportion as the eccentric is moved across the shaft for the earlier points of cut-off, the point of admission is hastened.

NOTES ON THE THEORY OF SHAFT GOVERNORS.*—At our spring meeting of 1890, at Cincinnati, three papers on shaft governors were presented, which, together with the extended discussions thereon, make a valuable contribution to the literature of this subject.

It is the purpose of this paper to add something to that discussion, with the hope of getting a little nearer to a correct solution of the perplexing problems surrounding the subject.

The matter to be discussed will be divided into several topics, for the sake of clearness.

1. THE PATH OF AN UNBALANCED GOVERNOR BALL OF A SHAFT GOVERNOR, ISOCHRONOUSLY ADJUSTED.—This problem was proposed by Professor Sweet in one of the papers referred to, and in an elaborate mathematical analysis Professor S. W. Robinson seems to prove that the centre of the approximately circular path is vertically above the centre of the shaft, and that

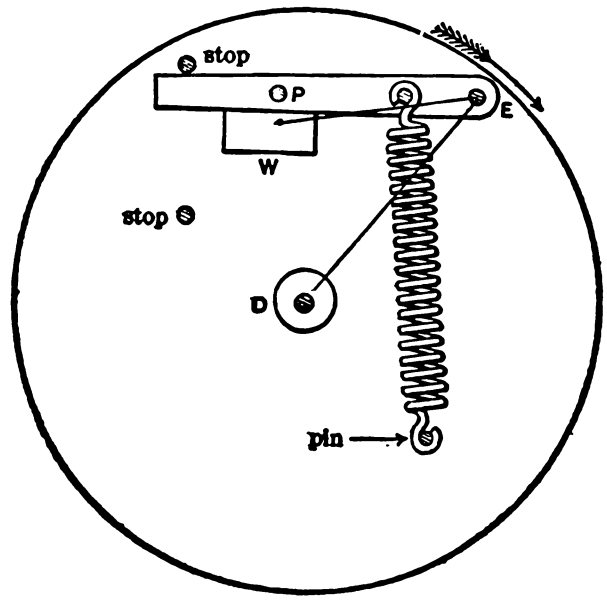

Fig. 3028.

the distance apart of these centres may be determined from the formula $h = \frac{9.78}{n^2}$; h being the distance sought, in inches, and n being the number of revolutions per *second*.

Confirmatory of this result, an experiment was made with an unbalanced weight, arranged according to the requirements of the problem. The figure illustrating the experimental apparatus is here reproduced (see Fig. 3028).

The spring adjustment was such that this apparatus was thought to be isochronous at 555 revolutions per minute, and the experimental determination gave h = 0.126 inch (mean of several trials),

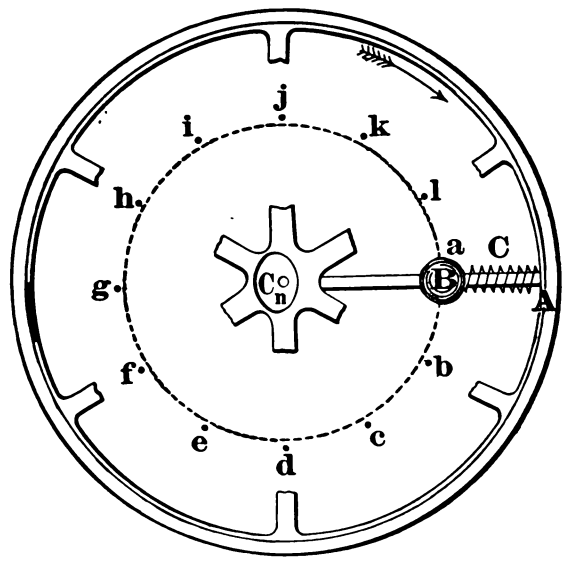

Fig. 3029.

while by the formula h becomes 0.114 inch—a fairly close agreement.

Following this a table of values of h was given, derived from the formula, revolutions per minute being taken at from 1,200 as a maximum down to 60; h in the former case being by calculation 0.02 inch, and in the latter, 9.78 inches.

Suppose this table to be extended to cover slower speeds than sixty revolutions per minute, even down to one revolution per minute, h would be found at this speed to be, by the formula, 35,200 inches, or 2,933 feet—more than half a mile above the centre of the shaft.

* From a paper read before the "American Society of Mechanical Engineers," by Albert K. Mansfield, Salem, Ohio, vol. xv., 1894.

This extreme result is noted merely as a curious matter of interest.

The formula is doubtless correct, as deduced from the assumption on which it is based; but let us examine the assumption.

Referring to the figure of Professor Sweet's paper, here reproduced, Fig. 3029, Professor Robinson says:

"Suppose, to start with, that the weight B is at *j*, moving along a horizontal portion of arc. The action of gravity tends to deflect it downward instead of allowing it to move along a circular path concentric with the shaft, thus giving the mass B an accelerated motion relative to the wheel A, and along the radius A B, so that by the time the weight reaches *a* it will have a considerable velocity toward the centre C. From this point on gravity counteracts, and on reaching *d* will have destroyed the radial velocity toward C, when B will again be moving horizontally, or perpendicular, to the radius, but will be at a point nearer the centre C than when at *j*. Now, from this point on, a radial acceleration will occur, so that at *g* the weight will be moving outward with a radial velocity which, from *g* on to *j*, will again be destroyed by gravity, thus bringing the weight to rest on the radius at *j*, though at a greater radial distance from the centre C than at any point before in the revolution, and putting the weight in the position and condition supposed at the start, when it will go on in repetition of the curve as the next turn of the shaft is made, and so on, continuously, the curved path described being found to be nearly a circle, with its centre elevated above that of the shaft."

The questionable part of this reasoning lies in the first sentence:

"Suppose, to start with, that the weight B is at *j*, moving along a horizontal portion of arc." Under this supposition what follows is justified; but the supposition is only one of an indefinite number that may be made with equal correctness, each leading to a different conclusion.

For example, suppose we start the analysis from the point *a*, the weight being assumed to have no radial movement at that point, and the motion to be right handed. Then, during the entire first half revolution, an accelerating force is drawing the weight away from the centre, always faster, until at *g* this force becomes zero, and the velocity outward is uniform. During the next half revolution, a force of equal effect acts to draw the weight toward the centre, but this force must be entirely expended in overcoming the velocity of the weight outward, which it had when at the point *g*; therefore, the movement of the weight is outward during the whole revolution. The same action occurs in succeeding revolutions, and the weight describes a spiral outward, finally reaching its outer stop.

If we start the analysis from *g*, we find by similar reasoning that the weight describes a spiral inward.

The reasoning in the case of starting from *g* or *a*, which does not permit the ball to return to its starting point, is found to be rational, when compared with the case of any weight moved in a straight line, with no resistance except that of inertia, by an accelerating force, and stopped by an equal retarding force. The weight comes to rest, and no work is gained or lost, yet the weight is found in a new position.

Again, if we consider the weight to start, with no radial movement, from any other points intermediate between its positions *a*, *g*, and *j*, *d*, it will be found to describe a spiral outward when the first position is taken at the right of the axis, and inward when at the left. These spirals are, as will be seen by consideration of the forces of inertia, in no case regular spirals, but are merely of spiral nature, not reëntering.

The conclusion to be derived from this analysis seems to be that the problem has no true solution, or if any expression based on correct reasoning could be found for the curve, it would be irrational.

Moreover, under the conditions of perfect isochronism assumed, one would be led to expect the motion of the ball to be erratic; as, for instance, it might first move in the outer spiral, when, reaching the outer stop, it may be compelled to move horizontally at the point *j*, which might start it in the eccentric circle. Slight disturbing influences, as of the atmosphere, would probably change it from this to other of its paths. This expectation seems to be, to some extent, verified by the experiment of Professor Robinson, for we find in his table of results the remarks "spiral inward," "spiral outward," "steady," etc.

The practical conclusion to be derived from this analysis is that an unbalanced weight in an isochronous shaft governor is not feasible.

2. Centrifugal Moment of a Governor Weight.—Theorem: The centrifugal moment about the weight pivot, like the simple weight moment, is the same wherever, on the line through the centre of gravity of the weight to the centre of the pivot, the weight be considered as concentrated.

Let A, Fig. 3030, be the centre of the shaft, B the centre of gravity of the weight, and C the pivot centre or fulcrum.

In considering simple weight leverage about C, the effective weight may be assumed to act at any point on the line B C, as at E, in which case the weight at E is to the actual weight at B as B C to E C. The centrifugal moment of weight B for any given number of revolutions is proportional to the radius B A times the line G C, drawn at right angles to B A through C. The centrifugal force of the resultant weight E is similarly A E times D C; D C being drawn at right angles to A E prolonged.

According to the theorem,

$$AB \times GC \times CE = AE \times DC \times BC,$$

the lines C E and B C being the relative weights in the two cases.

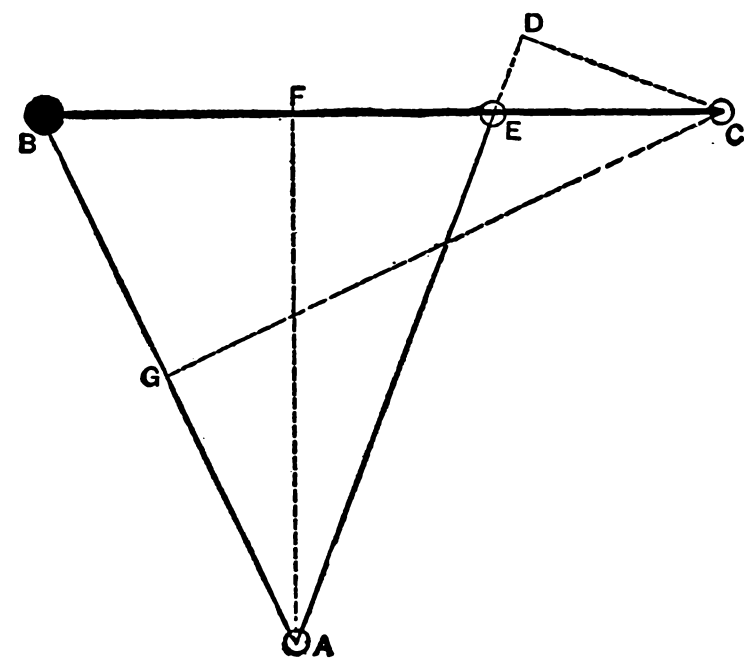

Fig. 3030.

Proof: Draw the line F A at right angles to B C. Then we have the similar triangles A F B and C G B; also A F E and C D E,

from which $AB : AF = CB : CG,$

and $CE : CD = AE : AF.$

Multiplying the equations together, and equating product of means to product of extremes, we have

$$AB \times GC \times CE = AE \times DC \times BC \text{ as asserted.}$$

This goes to show that the attempt, which is evident in many shaft governors, to so design them that the centre of gravity of the weight shall move nearly in a radial line, is unnecessary.

Wherever the weight be concentrated on the line B C, provided its amount be sufficient, the result is the same whether the arc described approaches a radial line or not.

This demonstration leads up to another interesting detail, which seems to show that shaft governors are not always arranged for true isochronism.

3. Position and Tension of Spring.—In Fig. 3031, let A be the centre of shaft, B the centre of gravity of weight, and C the weight pivot, as before.

Since the line A B may be taken as a measure of centrifugal force of B, then a line from A to B at any other position of B in its arc will be, in an isochronous governor, assuming uniform velocity, a corresponding measure of the centrifugal force of B in

this new position, as the line A B_1 for the position B_1. Suppose a pull spring, pivoted so as to swing about the point A, and to be pivotally attached at its outer end to the centre of gravity of B; also, suppose the spring to be of such tension and strength as to exactly balance the centrifugal force of B. Suppose, also, that the line A B represents the total extension of the spring—*i.e.*, that when the end B of the spring is at A the force of the spring is zero—then the spring, from the laws of spring tension, will just balance the centrifugal force of the weight B in other positions, as at B_1. The arrangement is therefore isochronous, for centrifugal and centrip-

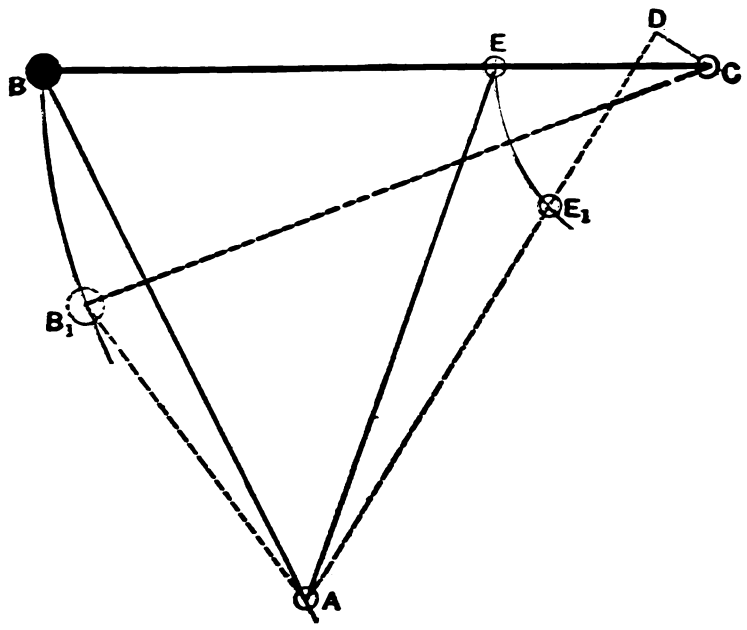

Fig. 3031.

etal forces are exactly opposed to each other in direction and amount.

Take any point E, as before, on the line B C, and draw the line A E; consider A E to represent a spring pivotally supported at A and pivotally connected at E, and of such force as to counterbalance the centrifugal force of B, or of its resultant weight at E. Then, if the zero of tension of this spring is at A, it will counterbalance correctly the centrifugal force of the weight at all other positions, as at E_1, for the spring lies in the line of action of centrifugal force, and its leverage D C about C is the same as that of

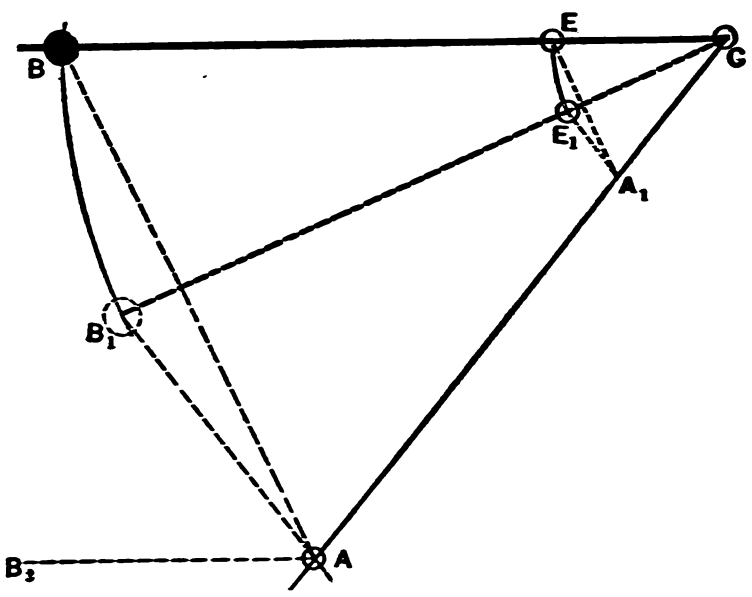

Fig. 3032.

the centrifugal force. From which it is clear that a spring pivotally adjusted at A, and pivotally connected to the weight arm *at any point* on the line B C, is correctly located to produce exact isochronism.

In Fig. 3032, let A B, B_1, and C represent shaft, weight, and pivot, as before. Draw lines A C and B_1 A. Draw an arc from C through any point E on the line B C, cutting B_1 C at E_1. From the point E draw E A_1, parallel to B A, and connect A_1 to E_1. The figure A_1 E E_1 is exactly similar to the figure A B B_1, and corresponding sides of the figures are parallel to each other. It will be clear from the foregoing and from inspection, that if a spring be pivotally connected from A_1 to E, and has its zero of tension at A_1, and is adjusted to balance the centrifugal moment of the weight, it will balance it in all other positions, as at E_1. But the arc B B_1 need not have been drawn through the centre of gravity B, for, from the previous demonstration (see Fig. 3030), it could have been drawn through any other point of line B C; therefore, the line B A might have had any direction between that of the direction of the line A C to that of the direction of a line A B_2, parallel to B C. Such an indefinite number of constructions would bring the point A_1 at any position on the line A C, or its continuation through A.

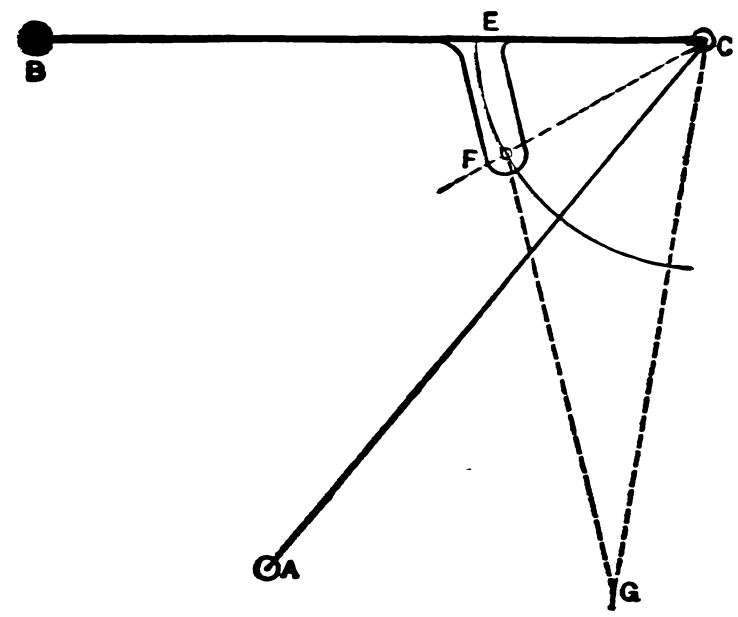

Fig. 3033.

It has, therefore, been shown that a *spring pivotally swung at any point on the line* C A, *or its continuation through* A, *and having its zero of extension at the first-named point, is correctly placed to produce exact isochronism.*

Referring to Fig. 3033, it will be clear without demonstration that the point of connection to weight arm need not be on the line B C. It may be anywhere on the weight arm, as at F, provided a new zero line G C be drawn angularly the same distance and direction from A C as the line F C from E C.

It follows that the point of connection of spring to weight arm,

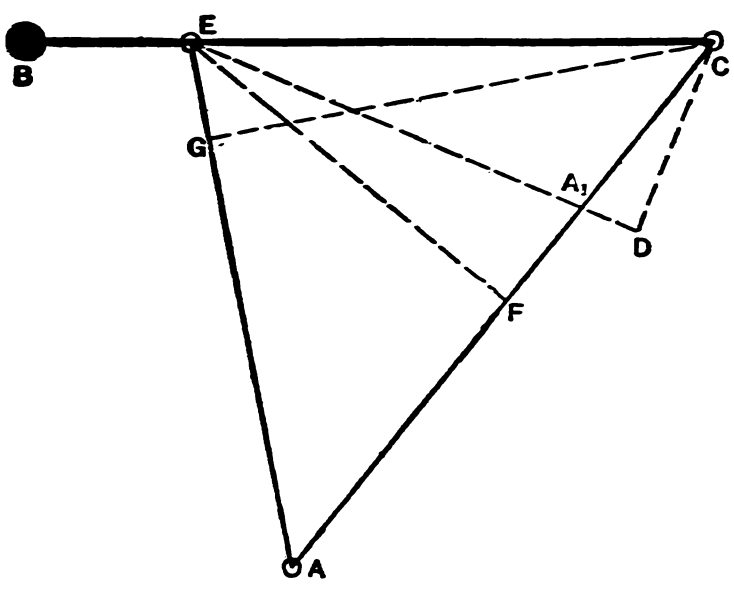

Fig. 3034.

and the direction of action of spring, *may be selected entirely at random*, or for convenience, provided only that the length between pivots and the tension of spring be fixed according to the principles laid down.

The conclusion arrived at by the preceding reasoning may be expressed in the form of a second

Theorem: The combined zero and fixed pivotal point of a spring, arranged to act isochronously on any point of the line of weight arm from weight pivot through centre of gravity of weight, may be taken at any point on the line from weight pivot through centre of shaft.

Moreover, the spring force required will be inversely as the distance of the fixed pivot from the weight arm point.

In Fig. 3034, letters A A_1 B C E represent the same parts as in Fig. 3032. Drop perpendiculars C G and C D from C on lines A E and E A_1, respectively; also from E drop the perpendicular E F on line A C. Then similar triangles A_1 E F and A_1 C D, as well as A F E and A C G, are formed, from which proportions may be made as follows:

$$AE : EF = AC : CG,$$

$$A_1C : CD = A_1E : EF.$$

Multiplying together, equating products of extremes and means, and cancelling E F, we have

$$AE \times CG \times A_1C = A_1E \times CD \times AC,$$

or

$$AE \times CG = A_1E \times CD \times \frac{AC}{A_1C}.$$

If we consider A C to be the unit of force of the spring when

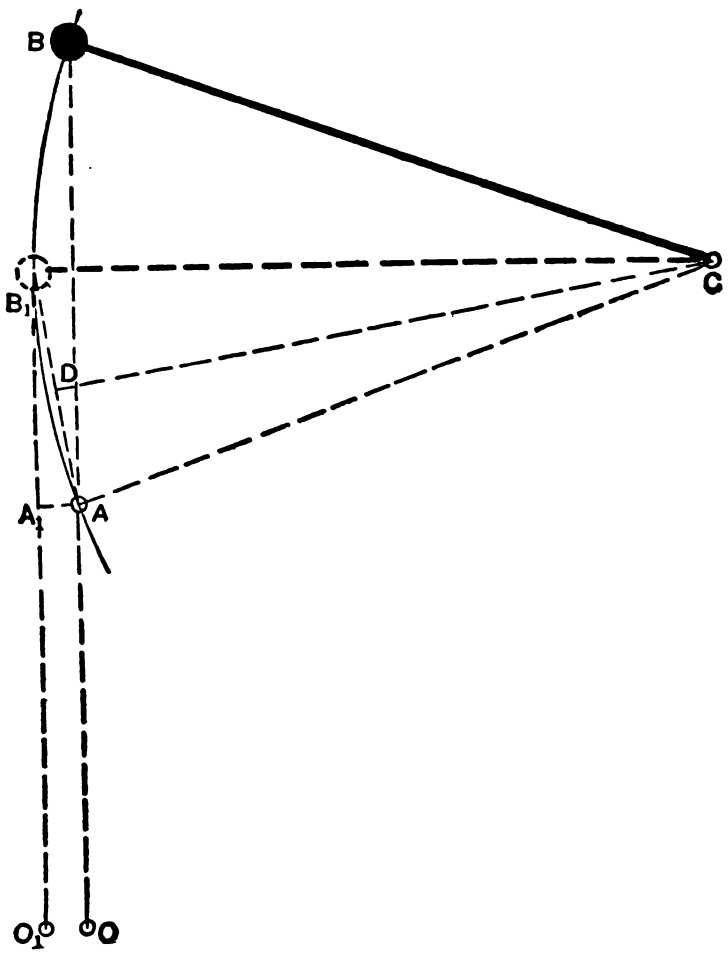

Fig. 3035.

the fixed pivot is at A_1, and A_1 C the unit of force when the pivot is at A, then this becomes intelligible.

It shows that the linear extensions of the springs A E and A_1 E, multiplied by their leverages G C and C D and by the units of force of the springs, are equal. The points E and A_1 were taken at random, which makes the demonstration general.

A further consideration of Fig. 3030 will show that when A is the fixed pivot the unit of spring force is inversely as the distance of the point of connection on line B C from C.

If, therefore, we have computed the centrifugal force of the weight B, we have merely to multiply this centrifugal force by the ratio $\frac{BC}{EC} \times \frac{AC}{A_1C}$ (see Fig. 3032 for illustration) to find the corresponding balancing spring force; or to multiply the centrifugal force per inch of radius by this ratio to find the corresponding spring force per inch of extension. The linear extension of the spring was before shown to be E A_1.

4. Approximate Isochronism.—In Fig. 3035, let A B C be the centres of shaft, of gravity of weight, and of pivot, as before. Draw a line from B through A to any point O. Let O be the fixed point of a spring pivotally attached to B, and having its zero of extension at A.

It is clear that the arrangement may be made isochronous for the two positions A and B. For the moment consider O to be infinitely removed from A, and investigate the mid position of B at B_1. Draw B_1 O_1 parallel to B O, and A A_1 parallel to B_1 C; also A B_1, and D C at right angles to A B_1 through C.

Let A C be represented by R and the angle A C B_1 by a. Then

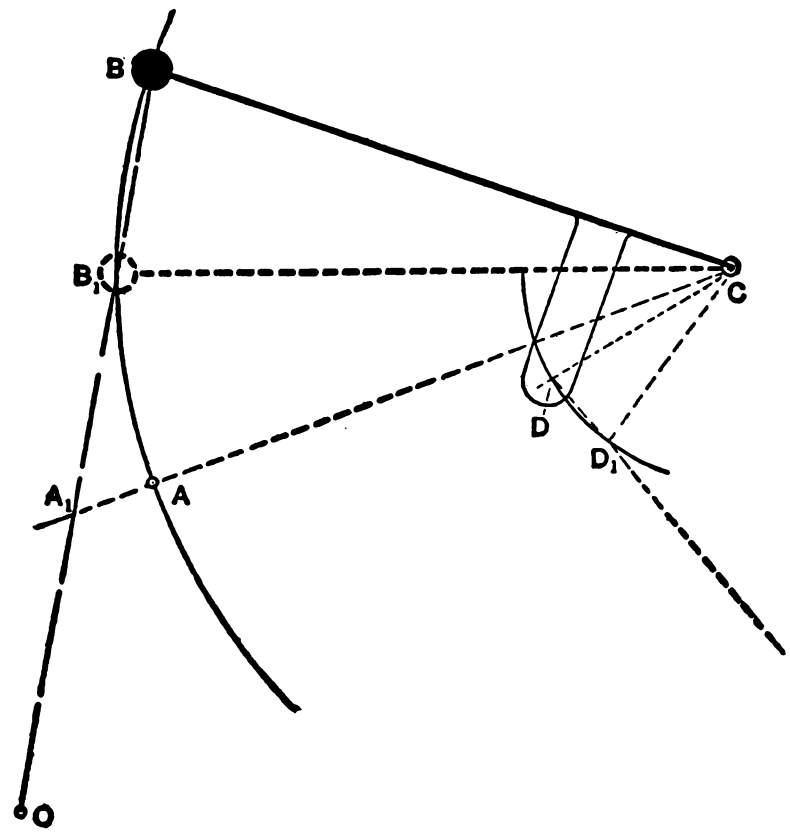

Fig. 3036.

the spring moment at B_1 is $R^2 \sin a$, and the centrifugal moment is $2 R^2 \sin \frac{a}{2} \times \cos \frac{a}{2}$, which expressions are equal to each other, by trigonometry. Therefore, with a spring so located and adjusted, a third point, B, is isochronous. If the point O is a finite distance from A, as shown, it will be found that there will still be

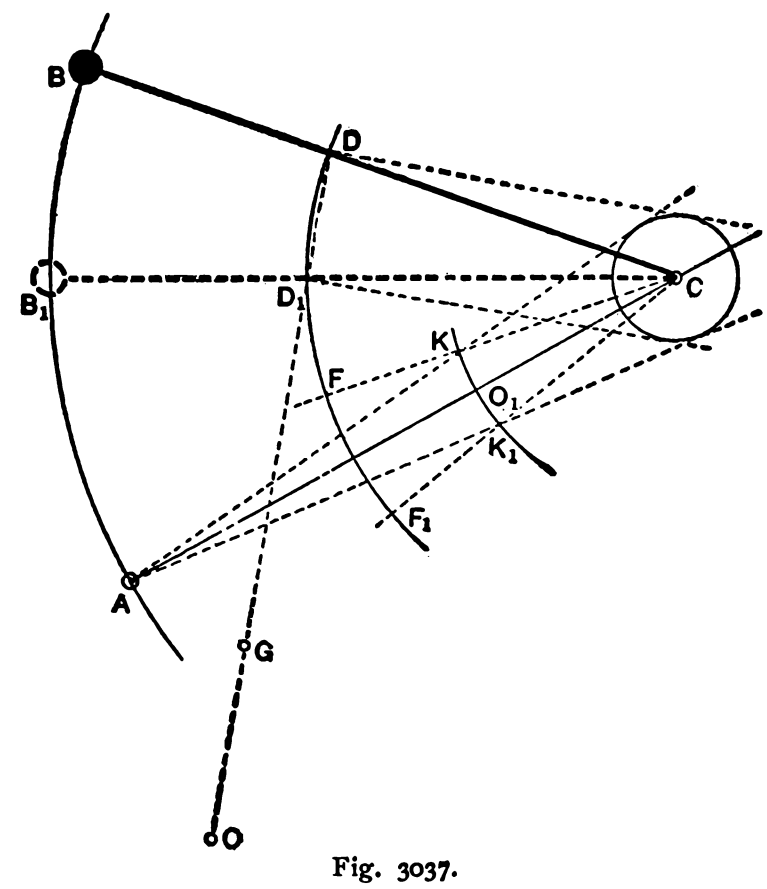

Fig. 3037.

a point B_1, near the middle of the arc A B, which will be isochronously balanced; other points, however, between A and B_1 will have their spring moment too small, and points between B_1 and B will have their spring moment too large.

Suppose the spring to be arranged as in Fig. 3036, the point B_1 being the inner or initial position of the weight B; then clearly,

from previous demonstrations—O being the pivotal point of the spring—to produce isochronism at points B_1 and B, A_1 must be the zero point of the spring. It will be found as before that a point nearly midway between B and B_1 is also isochronous; also, if the angle B C B_1 is not large, the approach to complete isochronism is very close. This corresponds to the arrangement commonly used in practice.

Clearly, the arc B B_1 may be drawn in any other place from C as a centre, as at D D_1, the line of the spring being made to pass through these two points, and their angular distance apart being the same as that of B and B_1.

5. Influence of the Weight of the Spring.—Let the spring be applied, as in Fig. 3037, and let G be its centre of gravity. Determine its moment m of centrifugal force about its pivot O, and divide by the length of the spring D_1 O, which we will call l. Owing to the weight G being constant, and the direction of l practically always the same, $\frac{m}{l}$ is very nearly constant—m being the moment of centrifugal force and l the length of the spring—for any degree of extension between D_1 and D, and the quantity $\frac{m}{l}$ is the tangential force at D, due to the centrifugal force of the spring. Extend the arc D D_1 across the line A C, and lay off each side of the line to F and F_1 one-half the arc D D_1. Draw radial lines from C to F and F_1. Draw a circle through C whose diameter is the chord D D_1. From A draw lines tangent to this circle, crossing the radial lines C F and C F_1 at K and K_1. Let d represent the distance A K.

Then, since $\frac{m}{l}$ is the force, $\frac{m}{l\,d}$ is the weight, which, concentrated at K or K_1—according to the position of the weight arm B C—will produce a centrifugal moment about C almost exactly equivalent, at the three points K, K_1, and O_1, to the centrifugal

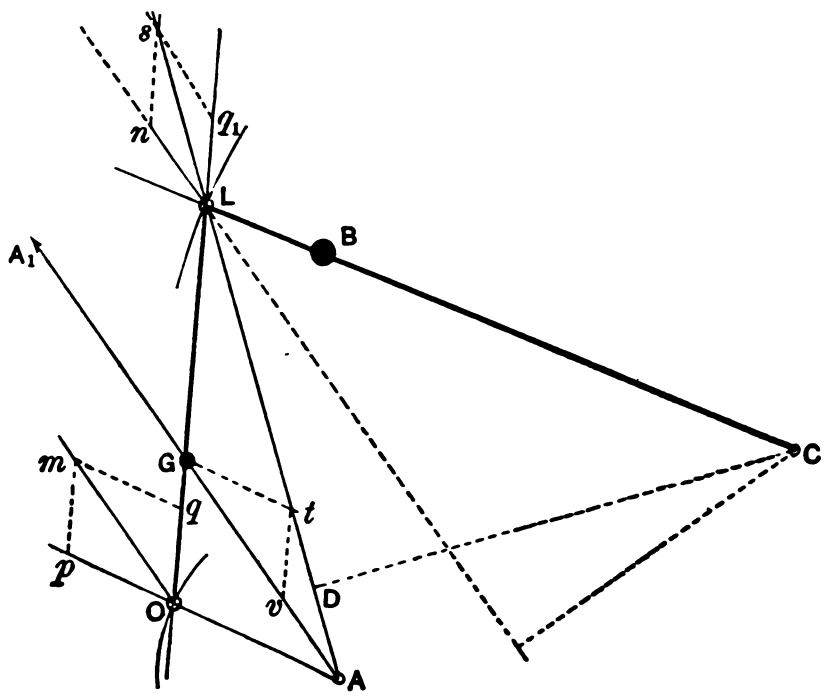

Fig. 3038.

moment due to the spring weight. Between the extreme positions K and K_1 and the central position O, the action of such a weight is not exactly equivalent to that of the spring, but with a moderate arc the error is extremely small.

The object of determining the location and amount of the equivalent weight K is to find the influence of the spring on the location of a correct centre of gravity line B C.

6. Influence of the Weight of the Link.—Theorem: If a governor link be constrained to move at one end in a circular path about the centre of the weight pivot, then is the centrifugal effect of the link the same as if that portion of the weight of the link were concentrated at its weight-arm pivot, which would rest on its support if the link were placed in a horizontal position on two end supports.

In Fig. 3038 let A be the shaft centre, C the weight-arm pivot, L O the link, and G the centre of gravity of the link. G A = G A, may be taken to represent the centrifugal force of the link. Clearly, this force may be resolved into two forces, O m and L n, the sum of which is equal to G A, while their ratio is as G L to G O, and their direction of action parallel to G A.

Resolve O m into the components O p and O q, O p having a radial direction from A, and O q lying in the line of the link. Lay off O q from L to q_1, in the direction of the link, and combine L q_1 with L n by the parallelogram of forces, which gives the force L s as the total resultant force of the link tending to rotate the weight arm about its pivot.

Draw L A, also G t, parallel to O A, and t v parallel to O L. By geometry, G A is divided at v, and L A at t, in the same ratio

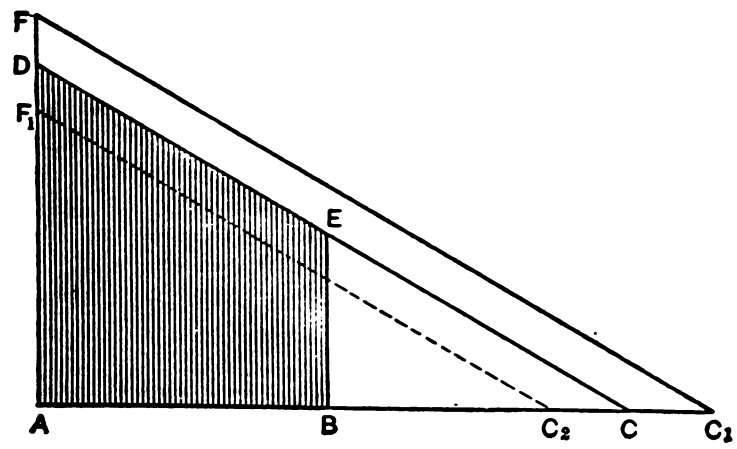

Fig. 3039.

as L O at G; therefore, since O m was made equal to G v in amount and direction, the triangles m O q and G v t are equal. L n was made parallel to and equal to v A, and n s is parallel to and equal to v t by construction; therefore, the triangle n s L is equal to the triangle v t A, and L s is equal to A t in amount and direction.

But $$\frac{At}{AL} = \frac{OG}{OL}, \quad \text{or,} \quad At = AL \times \frac{OG}{OL}.$$

In other words, when the centrifugal force acting at G is represented by the radius A G, that acting at L may be represented by the radius A L, multiplied by a fraction which is the ratio of the weight G, which would be supported at L, provided the link were to rest in a horizontal position on two supports at L and O; which was to be proved.

If the centre of gravity of the link were at its centre, as is common, then it would be exactly right to consider one-half the link concentrated at L.

7. Frictional Effect of Valve.—In Fig. 3039 let A C represent the maximum tension of spring and B C the tension to inner position of weight arm. Let A D and B E represent the spring force corresponding to positions A and B of weight arm. Assuming perfect isochronism between weight and spring, then A D and B E also represent the balanced centrifugal force, and this force, for any intermediate position of weight arm, is the corresponding height from the line A B to the line D E. Up to this time we have neglected the effect of valve gear friction.

Supposing this effect to be a constant force acting in the same direction as the centrifugal force of the weight, then it may be represented by a line parallel to and above D C, as E C_1. If the constant friction of the valve gear acts against centrifugal force, or with the spring, then F_1 C_2, parallel to D C, may represent its effect. In the former of these cases the maximum spring force becomes A F, and the maximum spring tension A C_1, while in the latter case these quantities become A F_1 and A C_2.

In some constructions, the connection between the governor and the valve gear is such as to produce a variable effect of friction. This is the case with the "Buckeye" governor, shown in Fig. 3040, in which, moreover, this friction has a centripetal effect.

In Fig. 3041 this variable resistance is illustrated by the curved line F_1 E_1.

By reference to Fig. 3040, an auxiliary spring P will be seen, which is designed to act through a little more than half the range

of the weight arm, and to produce an effect illustrated by the shaded portion of Fig. 3041. The result is that a line F_1 C_1 approximately straight, illustrates the centripetal action of the main spring, B C_1 being its initial tension, and B E_2 its total force at first stop, or initial position.

8. INERTIA IN A SHAFT GOVERNOR.—In Fig. 3042 let A and C be the centres of shaft and weight pivot, respectively, and consider the total effective weight of the governor weight and arm

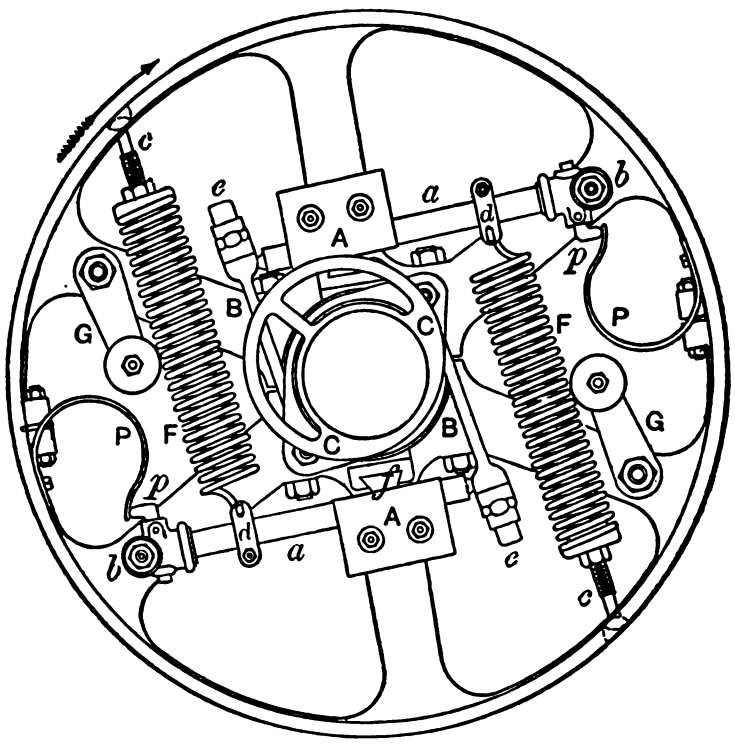

Fig. 3040.

centred at B. Inertia acts on the weight B at right angles to the line A B.

From analytical mechanics (see Weisbach) the *force* of inertia may be represented by the expression $P = M R \frac{d\omega}{dt}$, while centrifugal force is $F = \omega^2 M R$; in both expressions ω is the angular velocity, M the mass, R the radius A B, and $d t$ the small interval of time in which a change of velocity occurs.

Substituting for ω its equivalent valve $2 \pi T$, in which T is the number of revolutions per second, and differentiating the equation

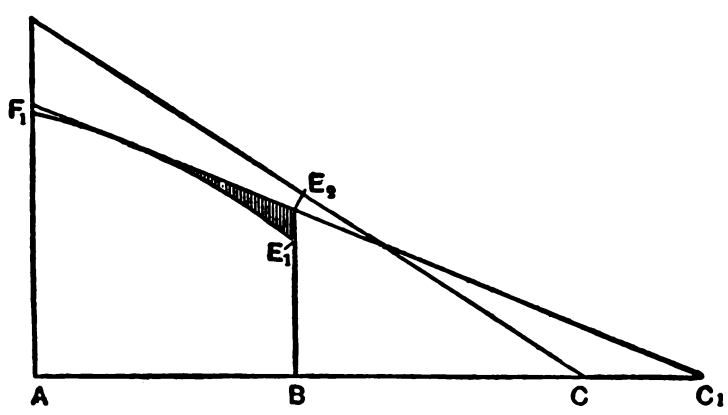

Fig. 3041.

for centrifugal force, since it is only the difference of force due to change of speed which is effective, we have

$$P = 2 \pi M R \frac{d T}{d t},$$

and

$$d F = 8 \pi^2 M R T d T.$$

If B L or B R, according the direction of motion, represents the force P, and B A_1 the force $d F$, then B L_1 or B R_1 is the resultant of these forces, and the tangent of the angle A_1 B L_1, or A_1 B R_1, which angle we designate by a, is

$$\text{tangent } \alpha = \frac{P}{d F},$$

or, substituting above values,

$$\text{tangent } \alpha = \frac{1}{4 \pi T d t}.$$

We see from this that the effect of inertia to increase or decrease (according to the direction of motion) the moment of force about the weight pivot is less the greater the number of revolutions per unit of time, and is greater the less the interval of time in which the change of speed takes place.

Let us assume that the weight B is no longer concentrated in a point, but is spread out into a disk of considerable size as in Fig. 3043, whose radius we call r; then the force of inertia relative to the axis A is greater than before.

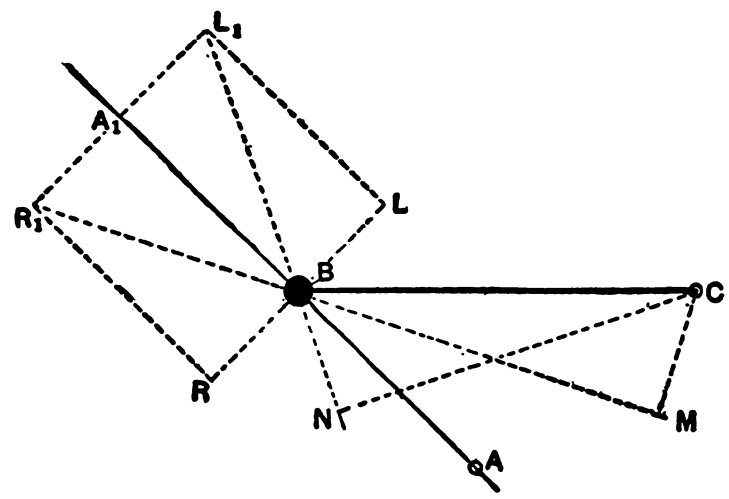

Fig. 3042.

By a well-known law of inertia, the radius of gyration of the weights is $R + \frac{r}{\sqrt{2}}$; therefore, the force of inertia acting at B is

$$P = \frac{\left(R + \frac{r}{\sqrt{2}}\right)^2}{R} M \frac{d\omega}{dt}.$$

Substituting $2 \pi T$ for ω, and dividing by $d F$ as before, we have

$$\text{tangent } \alpha = \frac{\left(1 + \frac{r}{R\sqrt{2}}\right)^2}{4 \pi T d T}.$$

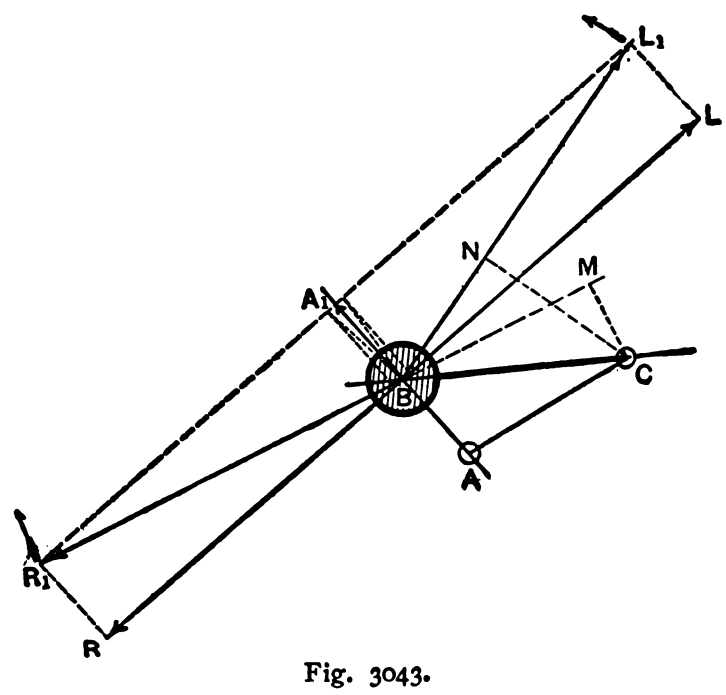

Fig. 3043.

Suppose r to be $\frac{1}{8}$ of R, T to be three revolutions per second, and $d t$ to be one second; then tangent α becomes 0.0406, and α is less than $2\frac{1}{2}°$. If $d t$ is $\frac{1}{10}$ of one second, then α becomes about 22°, and if $d t$ is $\frac{1}{100}$ of one second, then α is about 76°. The extremes of these three cases are shown graphically in Fig. 3043 for both right and left hand motion. This illustrates to how great an extent, when changes of speed are sudden, inertia force may be useful to assist centrifugal force; also to what a slight extent inertia acts when changes are not sudden.

It also shows that if the direction of motion be badly chosen, the combined forces may produce an instantaneous moment about the weight pivot in the wrong direction, thus interfering with sensitive governing.

As to the actual value of $d\,t$ in practice, it may often be a very small quantity; for in an engine having dead points the velocity changes a number of times, to a greater or less extent, during each revolution. These changes are less the heavier the fly-

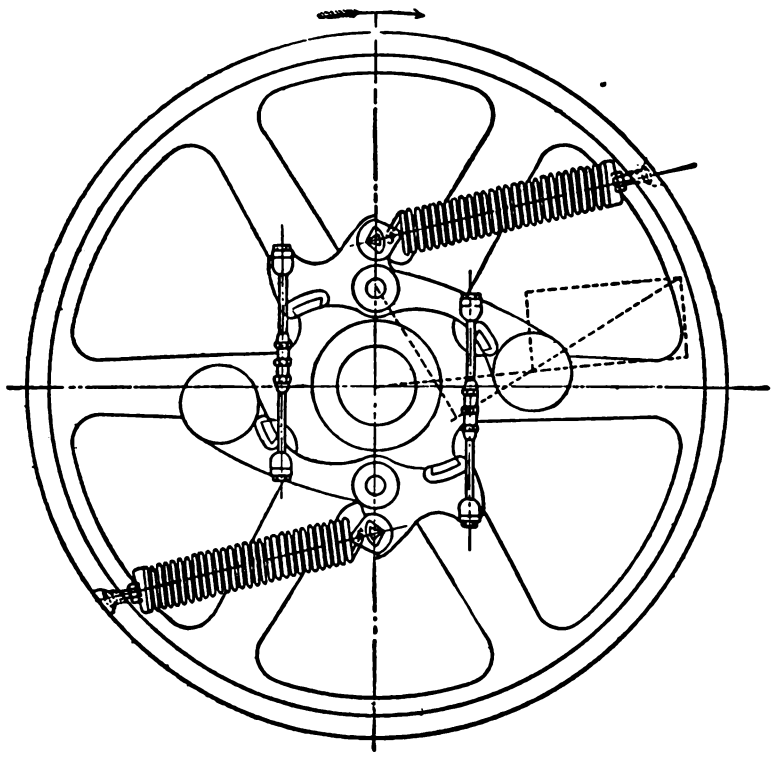

Fig. 3044.

wheel; therefore, with a light flywheel, an inertia governor should be specially efficient.

In one of the papers referred to at the beginning of this article, Mr. Armstrong advocates the use of inertia in the way which would reduce the effective moment about C, for the sake of "stability."

The fact seems to be, however, that stability and sensitiveness are best arrived at by using the force of inertia to aid centrifugal force, as in the left hand motion of Fig. 3043.

Fig. 3044 illustrates a governor for a single-valve engine—designed by Mr. J. W. Thompson—which is said to have performed so perfectly that no perceptible variation of the speed in the range of the governor could be detected by careful test, and there was no trouble from racing.

It will be noted that the arc through which the weight arm moves is so small that isochronism could be practically perfect, while inertia was utilized to a great degree.

In Fig. 3045 is represented a very ingenious method of combining a separate inertia weight with a shaft governor. This was applied by Messrs. Bancroft and Lewis of Philadelphia, Pa., to a Buckeye engine in the works of William Sellers & Co.

The inertia weight consists of a wheel, which, being centred on the shaft, has its centrifugal force completely balanced, while its inertia force acts to *aid* the centrifugal force of the governor. Instead of causing racing, this is said to have overcome all tendency to race, thus enabling the governor to be adjusted for practically perfect isochronism.

It is well known that an increase in the amount of the balanced forces—centrifugal and centripetal—of a governor tends to increase the effectiveness of the governor to overcome disturbing influences; yet an increase in these forces may produce an increase of friction in the pivots, which may defeat the desired object.

The friction of pivots is not increased, however, by so designing the governor as to utilize inertia to aid centrifugal force.

In this respect the shaft governor may have a decided advantage over the old ball governor, which is purely centrifugal.

Referring back to Fig. 3045, it is not essential that the inertia weight be centred on the shaft. It may be centred at the weight-arm pivot, thus forming a part of the weight arm. If its centre of gravity is coincident with the centre of pivot, it will not affect the centrifugal adjustment of the governor weight, but will aid the governing moment by its inertia.

A USE FOR INERTIA IN SHAFT GOVERNORS.*—In presenting this paper to the society, the writer does not presume the ideas to be new at all. Talleyrand said: "There is nothing new, except that which is forgotten;" and in the exhaustive study which has been given to the many obscure problems of engine governing, it seems improbable that this one should have been overlooked. It has not, however, been generally recognized, and the writer has failed to find any literature bearing on the subject.

It seems to be demonstrable that inertia, usually a disturbing element, can be and is made the reverse, even to performing the functions of a dashpot. To one having some experience with shaft governors, it would at first appear singular that certain governors should be capable of close regulation, without introducing an oscillatory action fatal to good governing. With a fly weight moving a considerable distance, a moderate speed, and friction reduced to insignificance, it would seem that were any efforts made toward close regulation, all the conditions for a first-class triphammer would be present; and yet these governors run smoothly, even when adjusted very nearly to isochronism; within one-half of one per cent. in some cases.

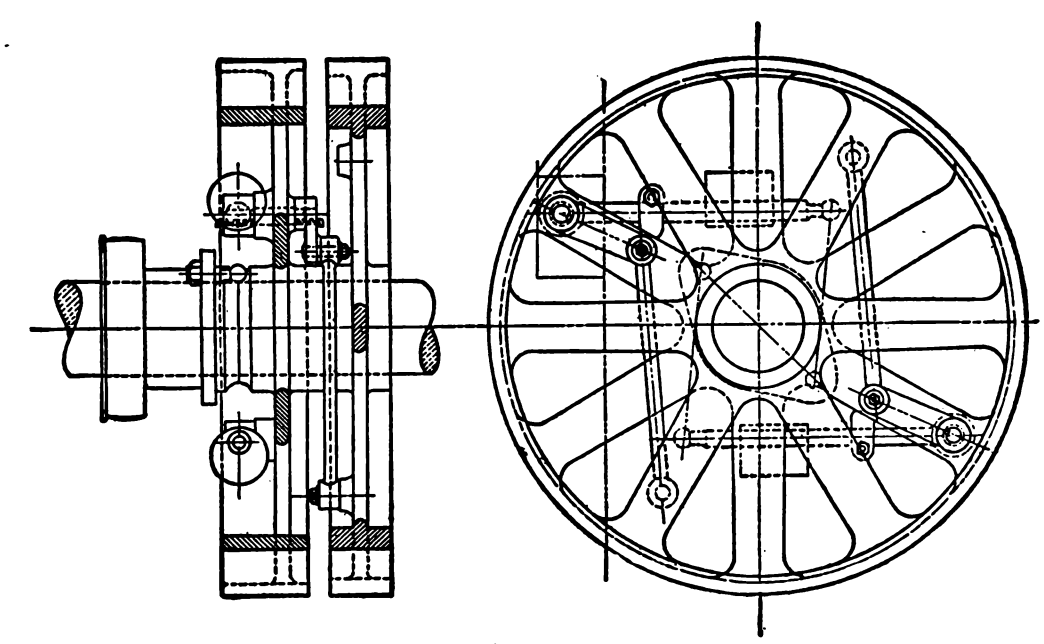

Fig. 3045.

The reason for this steadiness under apparently adverse circumstances seems to be about as follows:

When any governor is engaged in its task of controlling the engine, the fly weight travels at a variable speed, resulting from

* From a paper read before the American Society of Mechanical Engineers, by E. J. Armstrong, Oswego, New York.

its revolving in a circle of variable size; this change of velocity is often quite considerable, depending, of course, on the amount of radial movement and the rotative speed.

To take an example from the straight line engine—a fly weight is 16⅞ inches from the centre of the shaft when "in," and 20¼ inches when "out," making, at 220 revolutions per minute, a difference in velocity of 194′ 4″ per minute.

Whenever the fly weight takes a new position, it must change its speed; must either move faster or slower, be accelerated or retarded, and either absorb or give out power—somewhere. This resistance to a change in velocity acts at right angles to a radial line, drawn through the centre of gravity of the weight, and if the weight were pivoted so as to move radially, as in Fig. 3046, the only result would be to put a pressure on the pivot. If the fly weight is pivoted, as to move at an angle to a radial line, as in Fig. 3047, so that in its outward movement it goes toward the way the wheel rotates, then the outward movement of the fly weight will be opposed, to some extent, by this resistance to acceleration, depending on the angle which the line of movement forms to a radial line; or, to put it another way, upon the length of the lever arm *a b*, *c a* being the line of resistance, and *b* the fly-weight pivot. When the weight moves toward the shaft, the action is the same. It has to part with some of its momentum, and so hangs back, as in its outward movement, thus making, similarly to a dashpot, a resistance to movement in both directions, which can only be overcome quickly by a great force, or by a small one slowly; this resistance increases as the velocity of the weight, which is all that is accomplished by the ordinary dashpot.

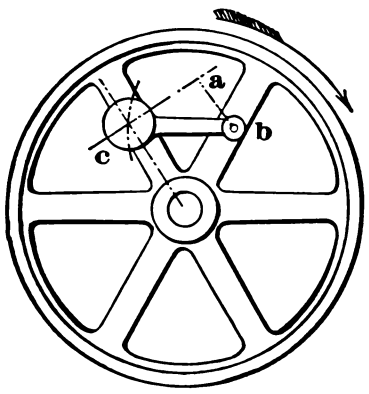

Fig. 3046.

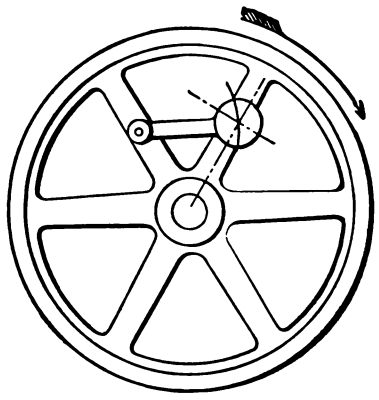
Fig. 3047.

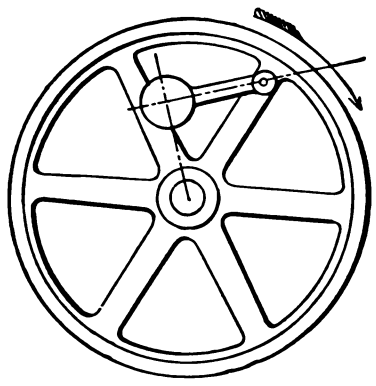
Fig. 3048.

Fig. 3048 shows a fly weight pivoted so as to move at an angle to a radial line, but in the opposite direction to Fig. 3047. A number of governors have been constructed on this plan, with the idea that any sudden jumping ahead would tend to leave the fly weight behind, throwing it outwardly and shutting off steam, or *vice versa*, in case of a sudden retardation of the engine; the whole scheme being to make the governor very sensitive to changes in speed.

In the variable velocity of the fly weight, we may find the reason why these attempts have not proved more successful. As the fly weight starts to go "out," it has the velocity due to its distance from the shaft; being pivoted so as to swing back freely, there is nothing to give it the greater velocity due to its increasing distance from the shaft until it gets it all at once at the end of its movement, with a slam not at all reassuring to the designer. Then, when it starts to go toward the shaft, it has a high velocity, and does not part with it until it strikes bottom. Of course a dashpot will cure it, but is it good engineering to build governors that way? At the beginning of this paper, mention was made of the absence of friction as an unfavorable condition. Of course, any considerable friction in a governor becomes a serious fault, but a small amount, such as is present in nearly all governors under the most favorable circumstances, would seem to be rather of advantage; the friction and inertia of the valve and its connections are usually sufficient to keep up a slight vibratory movement in the governor, and when this is the case the fly weight will move very easily if it only moves slowly, the friction coming into full effect should the weight attempt a more rapid change of base. This, of course, does not apply in the same degree to those governors having a locking or wedging action, and uninfluenced by valve friction or inertia.

AN EXPERIMENTAL DETERMINATION OF THE QUICKNESS OF ACTION OF A SHAFT GOVERNOR is thus described by D. S. Jacobus in "The American Machinist":

The experiments were made on the governor of a 50 horse-power Ball engine. Figs. 3049, 3050, and 3051 show the path travelled by the centre of the valve eccentric when the load is suddenly changed. As the eccentric is moved directly by the governor, the number of revolutions required to effect a change in the position of the governor is shown by the number of revolutions to effect a change in the position of the eccentric. The diagram for the eccentric travel, therefore, shows the quickness of action of the governor. The indicator cards taken before and after changing the loads are shown in Figs. 3052 and 3053. Fig. 3049 shows the path with no dashpot when the springs were set so that the governor is just at the point of unstable equilibrium. Fig. 3050 shows the path when the initial tension of the springs was made much less than for Fig. 3049, so as to give great stability with considerable variation in the number of revolutions of the engine per minute between light and heavy loads. Fig. 3051 shows the effect of a dashpot, the springs being set at the full theoretical tension, so that without the dashpot the governor would be unstable. The diagrams show that the dashpot diminishes the action, so that twice the time is required to move from one position to the other with the dashpot on, as is required with no dashpot. It is also shown that the quickness of action is very nearly independent of the stability of the governor, for, in Fig. 3050, where the governor runs at 40 revolutions per minute less than the speed for perfect

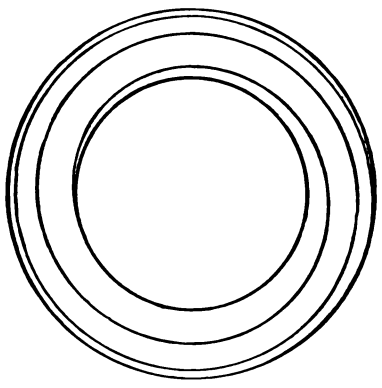
Fig. 3049.

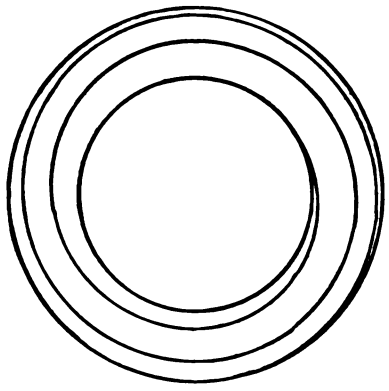
Fig. 3050.

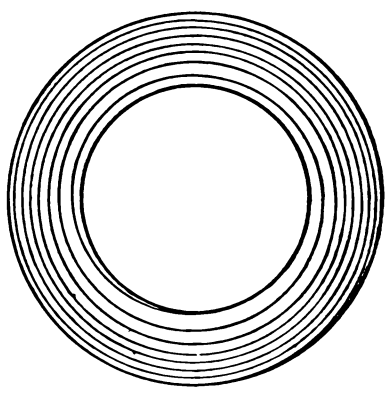
Fig. 3051.

adjustment, the number of revolutions for the governor to move from one position to the other is the same as in Fig. 3049, where the springs are set so that the governor is slightly unstable. Further experiments are to be made to determine the action of an inertia weight. The results of the experiments with and without a dashpot, however, show that for most classes of work the inertia weight will be an unnecessary refinement. By introducing the dashpot we diminish the quickness of action so that twice the time is required to effect a given charge in the governor as when no dashpot is employed. Nevertheless, this governor with the dashpot attached gives as quick a regulation as is necessary for electric lighting and other work. If, therefore, the quickness of action can be diminished so that twice the time is required for a given adjustment, without affecting the practical working of the governor, it will be an unnecessary refinement to increase the speed of action above that obtained with no dashpot.

GOVERNING STEAM ENGINES BY THROTTLING AND BY VARIABLE EXPANSION.*—In the present paper it is intended to consider certain points in connection with the two usual methods of governing a steam engine; and it will be attempted to show that,

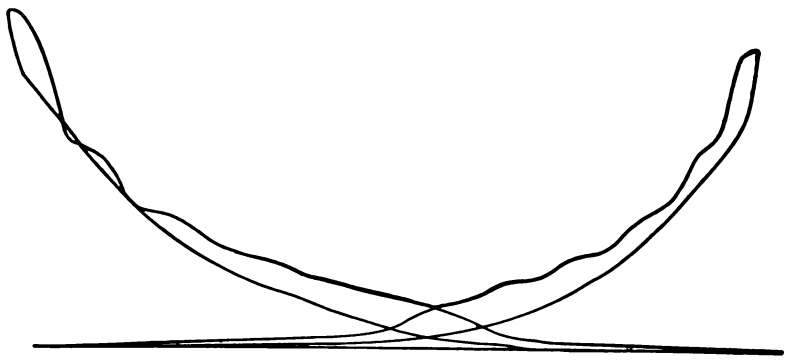

Fig. 3052.

although for many purposes the popular verdict in favor of variable expansion governing may be accepted, yet its advantages are commonly much overrated, and in some cases it has no advantage at all. Governing by throttling may, with convenience, be described as constant expansion with variable pressure; while the system commonly called automatic is constant pressure with variable expansion. A complete comparison of the two methods would require a consideration of the following points: (1) the effect on the steam consumption of the engine; (2) the effect on the closeness of governing, as regards both sudden and gradual changes of load; (3) the relative capabilities to deal with overloading; (4) the relative simplicity and reliability of the various gears from the mechanical point of view; (5) the first cost. It is not intended to describe any of the numerous gears which have been devised with more or less success for governing engines by either method, though undoubtedly the closeness of governing is more affected by the nature of the gear than by whether it acts on the throttle or on the expansion; it will be understood that the comparison is made between gears the best of their kind. The question of cost will not be considered, as it depends on the nature of the gear. The paper will, therefore, deal with the first three points only.

Governing by variable cut-off is generally considered to be superior to throttle governing, and the latter is looked upon by many engineers as fit for second-rate engines only. The principal reason for this preference appears to be the supposed great superiority in steam consumption of an engine governed by the cut-off; and the feeling is no doubt natural enough that pressure is being wasted when working at less than full load and governing by the throttle. As a rule, indicator diagrams from engines with variable-expansion gears look better, but they are often cloaks for exaggerated initial condensation; that is to say, the weight of steam shown by the indicator to be present in the cylinder at cut-off may be as small as can be desired, and much less than that shown by a throttled diagram of the same area; and yet it may be found, by comparison with the actual feed-water used, that the real consumption of steam per indicated horse-power is nearly as large, owing to excessive initial condensation; the indicator shows how much steam is present, but it tells nothing about the water. Hence the supposed gain over throttling, as regards steam consumption, is smaller than might be estimated, judging from the diagrams only. In fact, no conclusion as to economy can be derived from the diagrams only—a truth which cannot be too strongly emphasized, and the neglect of which leads to constant misunderstanding and error.

Nevertheless, when an engine is working against a very variable load, and it is expedient to realize the greatest economy at some load less than the fullest load which the engine is mechanically capable of developing, then governing by variable expansion has advantages, because it may be stated broadly that in a throttling engine the fullest load is the most economical load.

The present paper may be looked upon as an elaboration of section F of the late Mr. P. W. Willans' paper on "Steam Engine Trials," read before the Institution of Civil Engineers in April, 1893 (Proceedings, vol. cxiv., page 40). That section treats of "the economical value of automatic expansion gear as a means of reducing the power;" and all the numerical results about to be given in this paper are based on Mr. Willans' experiments on non-condensing and condensing engines. The author was unable to obtain any other experiments sufficiently complete for his purpose; but there can be no reasonable doubt that the principal conclusions here arrived at apply to any engine, although the absolute results will be different. To save repetition, it is to be understood that the numerical results apply strictly to Willans engines only.

ECONOMY.—The indicated horse-power of an engine of given cylinder volume depends on two factors, namely, the number of revolutions and the mean pressure. If, in order to alter the power, the speed is varied and the mean pressure maintained constant, the steam consumption per indicated horse-power, and equally per brake horse-power, will be increased but slowly as the load is diminished;† for the reason that, other things being equal, high speed of rotation is in itself more economical than low speed, the initial condensation being smaller, owing to the shorter exposure

Fig. 3053.

of the surfaces to exhaust temperature. If, however, the speed is constant, the mean pressure must be varied for variations in the load; and in this case the steam consumption per indicated horse-power will depend much more upon the load, and will increase in general as the load diminishes; the increase, especially per brake horse-power, being rapid at light loads. The mean pressure can be varied either by keeping the cut-off constant and varying the initial pressure, or by varying the cut-off and keeping the initial pressure constant. The present object is to inquire which of these two methods of altering the mean pressure gives the best economical results under various conditions. It will be seen that the answer is not the foregone conclusion it is sometimes supposed to be.

* Paper read before the Institution of Mechanical Engineers, by Captain H. Riall Sankey.

† This point was brought out clearly by Mr. Willans, both in his non condensing and in his condensing trials. In the latter, for instance, he showed that in the compound series, with 155 expansions and with 30 lb. mean pressure, the steam consumption per indicated horse-power per hour was respectively 14.5 lb., 15.26 lb., and 17.07 lb., with 400, 300, and 200 revolutions per minute.

As a preliminary, it may be interesting to inquire into the matter from a purely theoretical point of view. In his remarks on Mr. Willans' paper, read before the Institution of Civil Engineers (Proceedings, vol. cxiv., page 96), the author showed that the total water consumption per hour of a theoretical constant-expansion engine* was given by an oblique straight line (strictly an exceedingly flat curve), the total water being plotted as ordinates on a mean pressure base; and this he called the theoretical Willans law, because it had already been shown experimentally by Mr. Willans that the consumption of an actual constant-expansion engine was likewise given by an oblique straight line. The absolute steam-chest pressures required for each load can be marked

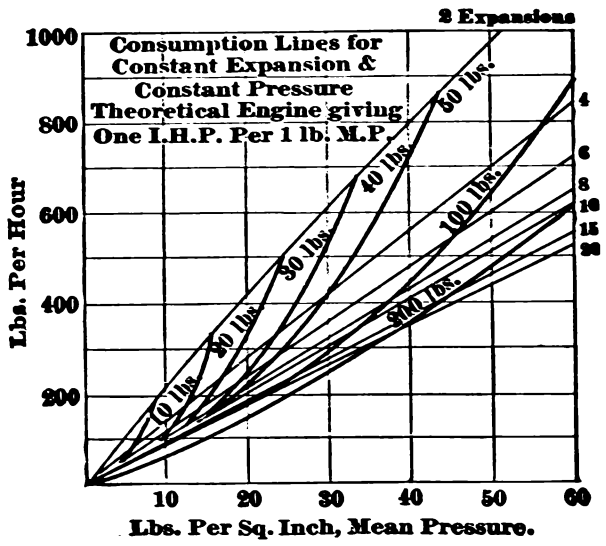

Fig. 3054.

on this oblique straight line, and form an equally divided scale. A number of such straight lines being drawn, Fig. 3054, each for a different ratio of expansion, it is evident that the consumption lines for a theoretical constant-pressure engine can be obtained by joining the points showing equal pressures, as in Fig. 3054, thus obtaining a series of curves.†

It will be observed that all the constant-expansion straight lines and all the constant-pressure curves pass through the origin, showing that with zero back pressure the water consumption is *nil* at zero mean pressure. Following one of the straight lines,

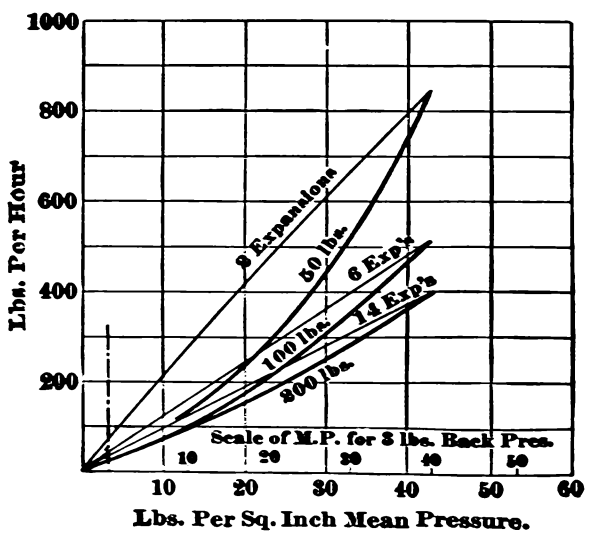

Fig. 3055.

* In the remarks referred to, the diagram of this theoretical constant-expansion engine was defined as follows: the admission was at constant pressure, the expansion adiabatic, the release instantaneous, and the back pressure absolute zero; there was no compression and no clearance, and initial condensation, radiation, and all other losses were supposed to be *nil*.

† The size and speed of the engine for which these consumption lines have been worked out are such that 1 lb. mean pressure gives 1 indicated horse-power, and it is suggested to call this the "standard-consumption engine." The consumption of any other size of engine can at once be deduced thus: the weight of steam required per hour for a theoretical engine capable of indicating 1,000 horse-power with 30 lb. mean pressure will be 1,000 ÷ 30 times that for the standard-consumption engine.

say that for four expansions, it will be noticed that it intersects the constant-pressure curve for 100 lb. at 55 lb. mean pressure; at this point, therefore, the consumption of the constant-pressure engine is equal to that of the constant-expansion engine; and inasmuch as for lower mean pressures the curve lies below the straight line, the two being in the form of a bow with its string, the consumption of the constant-pressure engine is less at all lower points than that of the constant-expansion engine, the difference being the vertical intercept between the straight line and the curve.

The consumption lines in Fig. 3054 have been drawn on the assumption that the back pressure is absolute zero; but if the

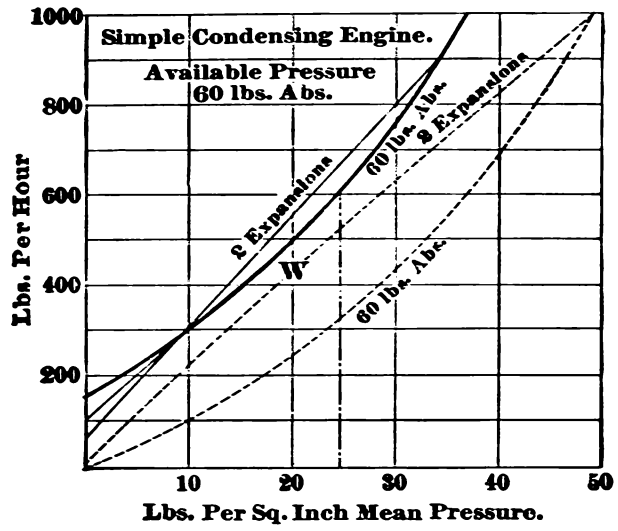

Fig. 3056.

back pressure is B lb. per square inch, the only effect is to reduce the readings of the mean pressure by B lb., as explained in the author's remarks above referred to; and these consumption lines can therefore be applied easily to any back pressure by shifting the mean pressure scale bodily to the right to the extent of the back pressure. Thus, if the back pressure is 3 lb. absolute, the consumption at 0 lb. mean pressure will be the same as it is with 3 lb. mean pressure when the back pressure is 0, and will, therefore, no longer be *nil* as above; and at 30 lb. mean pressure with 3 lb. back pressure the consumption will be the same as it is with 33 lb. mean pressure when the back pressure is 0; and so on, as is shown by the second scale of mean pressures in Fig. 3055. The latter is an abstract from Fig. 3054, and compares the

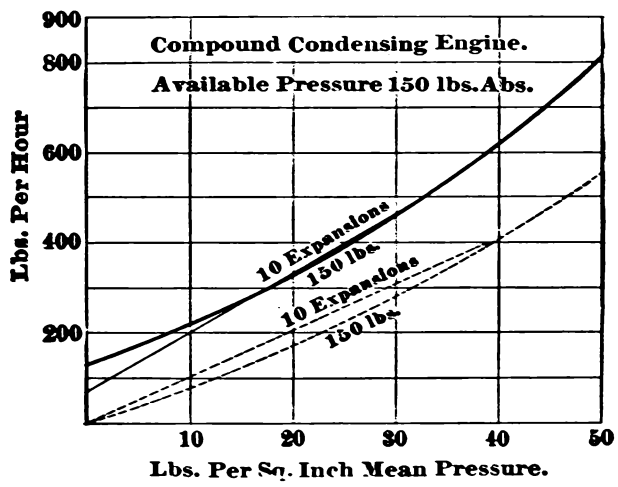

Fig. 3057.

consumption at all loads of a theoretical constant-expansion engine, and of a theoretical constant-pressure engine, in three cases, namely, when the expansions are two, six, and fourteen times, and the initial pressure is 50 lb., 100 lb., and 200 lb. absolute per square inch, respectively. It will be seen that at all loads less than full load the theoretical gain in economy by expansion governing is very considerable for a low initial pressure, but rapidly diminishes as this pressure increases. Thus, at a mean pressure of 20 lb., the gain by expansion governing, when the initial pressure is 50 lb., is 42.5 per cent.; at 100 lb. initial pressure, it is 26.3 per cent., and at 200 lb., it is 18.2 per cent. This diminution in the economical advantage of expansion governing is confirmed by experiment. Fig. 3056 gives in full lines the actual consumption

lines for a Willans condensing engine when working with low initial pressure, and Fig. 3057, when working with high initial pressure; and it will be seen that at 20 lb. mean pressure the actual gain by expansion governing is 10.5 per cent. with the lower initial pressure, and only 5.4 per cent. with the higher. The corresponding theoretical consumption lines deduced from Fig. 3055 have been plotted for comparison in dotted lines, and two important differences are at once evident: first, the proportional gain in economy by expansion governing is greatly less in the actual engine than it is in the theoretical; and, secondly, in the actual engine the constant-pressure line cuts the Willans or constant-expansion line at 9 lb. mean pressure in Fig. 3056 and at 14 lb. in Fig. 3057, showing that with light loads the constant-expansion engine is the more economical of the two. The economical gain by expansion governing is, therefore, considerably less than would appear at first sight from theoretical considerations, the obvious reason being that the higher steam-chest pressure increases the losses due to initial condensation, to radiation, and to leakage—these losses making themselves felt more and more as the pressure increases.

Returning to Fig. 3056, which gives the lines of water consumption in an actual simple engine when condensing and working with an available steam pressure of only 60 lb. absolute, it will be noticed that the constant-expansion engine is arranged for a maximum load corresponding to 35 lb. mean pressure; and under these circumstances, as already pointed out, expansion governing is more economical than throttle governing to the extent of 10.5 per cent. at three-fifths load. This is the case referred to by Mr. Willans in page 42 of his paper on "Steam Engine Trials" (Proceedings, Inst. C. E., 1893, vol. cxiv.), and in his opinion to such cases as this is largely due the fashion of considering that expansion governing is necessarily much more economical than throttling. Variable expansion gear was first applied to simple engines working with low boiler pressure and often with still lower steam-chest pressure. For enabling an occasional heavy load to be dealt with, such engines had originally been arranged to cut-off much later than was required for ordinary work. Naturally, the change gave excellent results; and it was too often assumed that the application of automatic expansion gear would produce an equal saving in cases which were altogether different. Even in the case just considered, by no means would the same saving be effected if the constant-expansion engine were not adjusted for working at an excessive load, such as 35 lb. mean pressure is, relatively to 60 lb. initial pressure. Had the engine been arranged

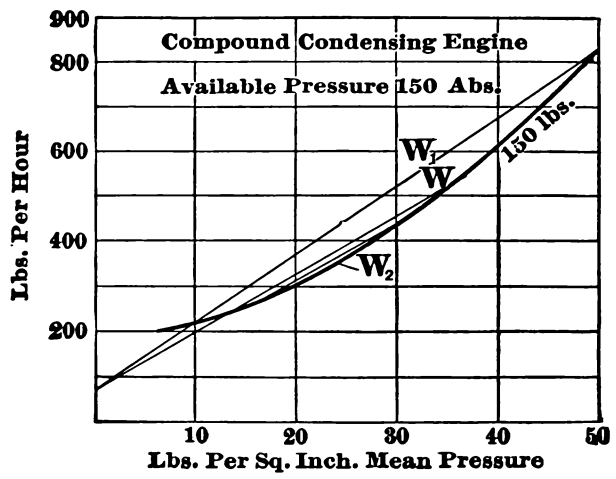

Fig. 3058.

to work at only 25 lb. mean pressure as its maximum load, and, therefore, with the advantage of greater expansion at all times, the economy to be obtained by varying the expansion in place of throttling would have been much smaller, as is shown in Fig. 3056 by the line marked W.

It is most unlikely, however, that a new engine would be constructed to work with so low a pressure as 60 lb. absolute. Fig. 3057 refers * to a more usual case, namely, that of a compound condensing engine working with a fairly high boiler pressure. It is assumed that 150 lb. absolute is the maximum pressure available at the engine; and that the engine is so designed as regards strength and bearing surfaces that it will run continuously with 40 lb. mean pressure, and for short periods with 50 lb. mean pressure. In Fig. 3057, the constant-expansion engine is arranged for 10 expansions, which, with 150 lb. absolute initial pressure, limits the mean pressure to 36 lb. as a maximum, whereas with variable cut-off there is no difficulty in obtaining 50 lb. mean pressure. If, however, the conditions of working require 50 lb. mean pressure for short periods, then to obtain this with constant expansion the fixed cut-off must be made later, and the consumption will be increased for all loads, as shown in Fig. 3058 by the line W_1. If,

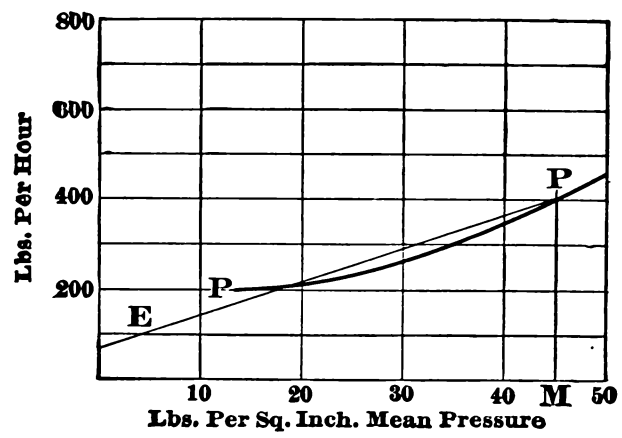

Fig. 3059

on the other hand, it is certain that the load on the engine will never exceed that corresponding with 32 lb. mean pressure, then the cut-off can be made earlier to correspond with this load; and the resulting consumption line for constant expansion, marked W_2 in Fig. 3058, is much closer to the constant-pressure line than in either of the two previous cases; in fact, so close that advantage from the use of variable expansion gear must be sought upon other grounds than that of economy. It will be noticed that in this case at all loads below half load the constant-pressure engine actually uses more steam per horse-power than the constant-expansion engine.

The above points to the following method for constructing a diagram, by means of which the economy of governing by expansion and by throttling can be compared. Draw the water-consumption curve P P for constant pressure, Fig. 3059, suitable for the case under consideration; that is to say, according as the engine is condensing or non-condensing, simple, compound, or triple. Then draw a vertical line M P through the maximum mean pressure at which, under any conditions, the engine may have to work; and through the intersection of this vertical with the constant-pressure curve draw the constant expansion straight line P E, according to the Willans law. The required comparison is thus established.

A most important point to notice is that with throttle governing the water per indicated horse-power decreases continually as the load increases; but with expansion governing the water per indicated horse-power decreases at first with increase of load, until the best economy per indicated horse-power is reached, after which it increases. This can be shown in the following manner: Let the curve P *p*, Fig. 3060, be the water-consumption curve for constant pressure; then, in order to find the consumption per indicated horse-power corresponding with any point *p* on the curve, draw a straight line O *p* to intersect the vertical scale marked "water per indicated horse-power;" the point of intersection *d* shows the water per indicated horse-power at the point *p*, namely, 16.8 lb. in the example taken. It is evident that, in order to find the mean pressure corresponding with the minimum consumption per indicated horse-power, it is only necessary to draw a tangent O *r* to the curve from the point O; then a vertical *r m* through the point of contact gives the corresponding mean pressure. It will also be seen that, as the point *p* moves to the right along the constant-pressure curve, the water per indicated horse-power represented by *l d* will diminish until the point *r* is reached; beyond this point the consumption per indicated horse-power increases until the point P is reached, beyond which it will be supposed the engine is

* Such a case is not unlikely to occur in electric tramway work and in rolling mills.

not intended to work. P E is the consumption line for a constant-expansion engine; in this case it is clear that the minimum consumption occurs at *r*.

This construction readily solves the following important problem, which is given here, although only indirectly connected with the present inquiry. The problem is: what is the most economical mean pressure to work at, knowing the conditions of loading, the kind of engine, and the available steam pressure? For instance, let a compound condensing engine, with an available steam pressure of 150 lb. absolute per square inch, be required to work principally at a load of 300 indicated horse-power, but occasionally up to a maximum of 600 indicated horse-power.* The constant-pressure consumption curve for 150 lb. is given in Fig. 3060;

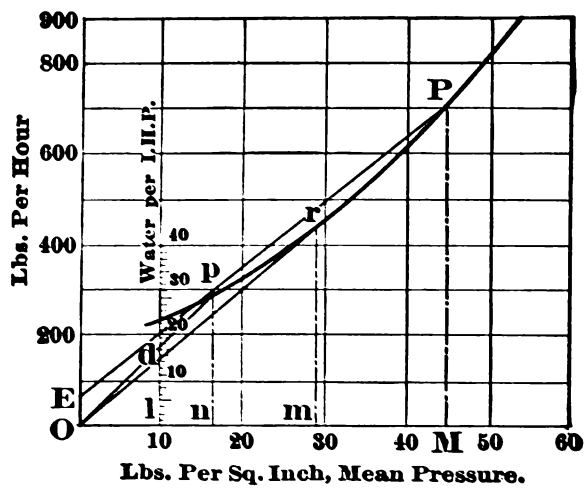

Fig. 3060.

and, as already seen, the lowest consumption per indicated horse-power is obtained with 30 lb. mean pressure, and is 14.7 lb. of water per indicated horse-power per hour. Since the engine is working most of the time in the neighborhood of 300 indicated horse-power, the cylinders ought, if possible, to be so arranged as to give 300 indicated horse-power with 30 lb. mean pressure; but with such cylinders the mean pressure required for the maximum load of 600 indicated horse-power would be 60 lb., which cannot be obtained with the steam pressure available in a compound engine with the usual ratio of cylinders. There would be no difficulty, however, in obtaining 50 lb. mean pressure, hence an increase of cylinder volume is necessary in the ratio of 50 to 60. With the enlarged cylinders, 300 indicated horse-power would require $30 \times 50 \div 60 = 25$ lb. mean pressure per square inch. Referring to Fig. 3060, it will be seen that with this mean pressure the consumption per indicated horse-power is 14.9 lb., or an increase of only 0.2 lb. over the minimum.

To take another example, let the average load be 450 indicated horse-power and the possible maximum 600, the other conditions being as before. In this case the cylinders ought to be arranged to give 450 indicated horse-power with 30 lb. mean pressure; and thus the mean pressure required for the 600 indicated horse-power would be $30 \times 600 \div 450 = 40$ lb.

The true criterion of the engine's performance ought, however, to be the water consumption per brake horse-power, and not per indicated horse-power. With a slight modification of the above construction, the mean pressure can be determined which gives the best economical results per brake horse-power; such a question, however, does not enter into the scope of this paper.

From the foregoing it appears that, at any rate up to a certain point, the lower the mean pressure for which the fixed cut-off is arranged the less difference is there between the consumption at constant expansion and the consumption at constant pressure. For a particular number of expansions, however, the Willans straight line is a tangent to the constant-pressure curve; and for all mean pressures below the point of contact the constant-expansion engine is more economical than the constant-pressure engine. The best possible results would, therefore, be obtained by altering the cut-off from full load down to a certain mean pressure depending on the conditions of the case; and from this mean pressure downwards by reducing the power of the engine by throttling. A case in point is illustrated in Fig. 3076. From A to B the cut-off is varied, and the saving effected in comparison with a constant cut-off is exhibited by the difference between the curve and the Willans line W_3. At B the cut-off becomes fixed, and the consumption then follows the Willans line W_4; and the saving is the difference between this line and the dotted portion of the constant-pressure curve. This result can be obtained by an arrangement consisting essentially of a throttle-valve governor, together with a steam cylinder and piston which controls the cut-off. The movement of the piston is produced by the changes of pressure in the steam chest, which are caused by the throttle valve. Such an arrangement can be applied to any engine; but the exact mechanism will, of course, depend on the class of engine with which it is used.

Thus far, condensing engines only have been considered; but Fig. 3061 gives the lines of water consumption for a non-condensing engine with constant pressure, and also with constant expansion. The available pressure at the engine is 130 lb. absolute; and by way of comparison the consumption lines for a condensing engine with the same available pressure have been drawn. The important point to observe is that the economical mean pressure is considerably greater for a non-condensing than for a condensing engine. Thus, in the example chosen, the lowest consumption with the non-condensing engine occurs with 38 lb. mean pressure, and is 21 lb. per indicated horse-power; whereas with the condensing engine it occurs with 25 lb. mean pressure, and is 15 lb. per indicated horse-power, as is seen by drawing tangents from the origin to the respective consumption curves. In fact, the economical mean pressure in a non-condensing engine is nearly equal to the greatest mean pressure that can be obtained in it, supposing it to be a compound engine with the usual ratio between the cylinders; but in a condensing engine, it is not much more than half the greatest mean pressure which can be obtained. This difference is of great importance, and materially reduces the value of variable cut-off gear in non-condensing engines. As an illustration, the case may be taken where the engine is occasionally, but for short periods only, called upon to develop the greatest possible

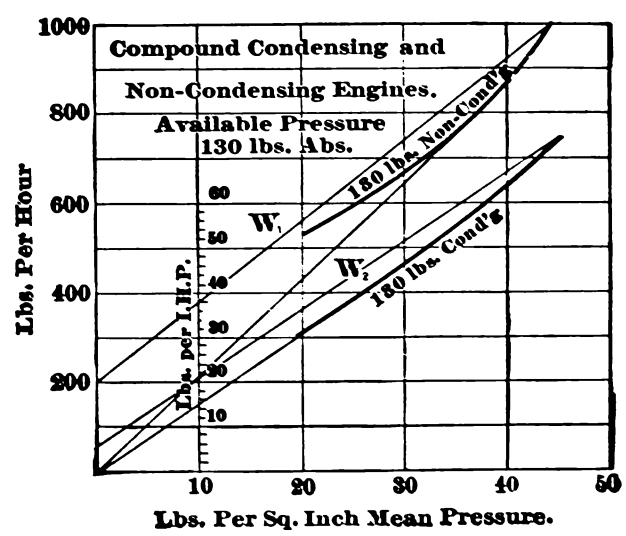

Fig. 3061.

power compatible with the steam pressure available. In the non-condensing engine the greatest attainable mean pressure in the example represented by Fig. 3061 is 45 lb., and six expansions are required to obtain this mean pressure with 130 lb. absolute steam pressure. The Willans line W_1 for this number of expansions is drawn in Fig. 3061, and shows that with 30 lb. mean pressure the gain by expansion governing is 10.12 per cent. In the condensing engine the same maximum mean pressure is attainable, and the Willans line W_2 gives the consumption for a throttling engine whose cut-off is arranged to allow of this mean pressure being obtained, and the intercept between this line and the constant-pressure curve shows that at 30 lb. mean pressure the gain by expansion governing is no less than 11.15 per cent. Clearly,

* The water per indicated horse-power is evidently proportional to $p\,n \div o\,n$; that is, to the tangent of the angle $p\,o\,n$, which is proportional to $1\,d$; so that the scale of "water per indicated horse-power" is evidently an equally divided vertical scale; and it is convenient to place it at 10 lb. mean pressure, as it is then one-tenth of the scale for total feed water.

therefore, the value of expansion governing is greater in a condensing than in a non-condensing engine.

GOVERNING.—It would appear that Corliss, Sulzer, and other similar trip gears can be made to work up to speeds of about 150 revolutions per minute. Taking the valve motion into consideration, such gears are mechanically as simple as throttle-valve gear, and the working ports of the governor require little power to move them, so that such governors are very sensitive. For a simple engine, therefore, the two methods ought to be on a par in respect to closeness of governing, but with some advantage to the expansion governor on account of the generally smaller clearance, and the absence of the reserve of steam which is contained in the steam chest of the throttling engine and is, consequently, beyond the control of the governor. For a compound engine, however, the trip gear has clearly the advantage, as it can be more readily applied to each cylinder; and this is still more true of a triple-expansion engine. Up to 150 revolutions per minute, therefore, throttle-valve governing need not be considered.

Above these speeds, however, variable expansion gears, being no longer of the trip class, require considerable power to work them as a rule; and it is usual to employ powerful shaft governors for the purpose. Such governors are clearly more expensive than throttle-valve governors, and are probably also less sensitive. The comparative simplicity of throttle-valve governors and their greater sensitiveness under such circumstances, are, in fact, their great recommendation.

The object in view in regulating the speed of an engine is to approximate as nearly as possible to an absolutely uniform angular velocity. Irregularities in this respect may occur as follows: (1) variation during a single revolution; (2) variation without change of load, or with only slight change of load or steam pressure; (3) variation consequent on considerable but gradual change of load or pressure; (4) momentary variation consequent on sudden change of load. For a given engine, changes in angular velocity during a single revolution depend solely on the flywheel and not on the governor, excepting, indeed, in an exceedingly slow-speed engine, where the governor may have some effect. Accuracy in this respect is evidently attained more easily in a high-speed engine than in a slow-speed engine. The second class of variation is generally due to friction in the governor, or rather to want of power in the governor to overcome the friction, so that a considerable change in speed is required to move the governor and to effect any change in the position either of the throttle valve or of the cut-off.

Expansion gear driven by a shaft governor is clearly more difficult to manage in this respect than a throttle governor. The third variation can be reduced, whatever the kind of governor, to any percentage desired, however small; but the penalty paid for extreme accuracy is obtained by a secondary governor, or by means of secondary action in the governor. As regards "hunting," it would appear that high-speed engines, especially if governed by the throttle valve, are more liable to this defect than slow-speed engines. A rapid oscillatory motion of the valve can produce only a small effect in a slow-speed engine, because the inertia of the ports and of the flywheel is so considerable as to prevent any great proportionate change in speed during the interval of an oscillation. A high-speed engine, however, owing to the much reduced inertia, responds to any alteration in the position of the valve by changing its speed materially; or, in other words, the speed of a high-speed engine tends to follow the oscillations of the throttle valve. Such oscillations are produced by any stickiness in the governor, and are much increased in amplitude if the time of oscillation of the governor synchronises with the revolutions or with some multiple of the revolutions of the engine, or, in exceptional cases, with the oscillations of the steam in the steam pipes. It would appear that in this respect expansion governing is less liable to "hunting," which may be due to the governing action occurring intermittently; that is, when the cut-off takes place, whereas the throttle valve is governing more or less continuously.

The fourth requirement of governing, namely, capability of dealing with momentary sudden and considerable changes of load, does not apply to all engines, but only to those in which the load actually changes in this manner; such, for instance, as an engine driving a wire mill. Rapidity of action of the governor is essential in this case; but a heavy flywheel is also necessary, in order to secure fairly steady running, and it is evident that, theoretically at any rate, the momentary change of speed can be reduced to any desired percentage by suitably increasing the weight of the flywheel. The momentary change in speed in an engine on suddenly changing the load is looked upon by many as the best criterion for comparing the relative merits of the governing of engines. It is no doubt a good test, if not pushed to extremes; but it should be observed that the governing arrangements of an engine may be perfectly suitable for a slowly changing load, and yet quite unable to cope with a suddenly changing load. The highest perfection of governing, when dealing with a suddenly changing load, can be obtained only by having an abnormally heavy flywheel, and by regulating the admission of steam to each cylinder individually in compound and triple-expansion engines. The latter regulation generally involves a considerable addition of gear to the engine, and the brake efficiency is proportionately reduced.

In order to compare the relative merits of expansion and throttle governing in respect to a rapidly changing load, the author will consider three different high-speed engines of the same kind and power: the first being simple, and the other two compound and triple, with receivers and with the cylinders arranged tandem fashion; and it is further understood that each engine is running at the same speed, and has the same flywheel power.

In a simple engine, when governed by the throttle, a sudden increase of load is met by an increase of pressure; and if the governor is sensitive, the interval between the change of load and the increase of pressure is exceedingly short, so that the speed will be well maintained. If, on the other hand, the engine is governed by the cut-off, the heavier moving parts of the governor, if of the flywheel kind, will increase the interval between the change of load and the action of the governor; so that the speed of the engine will drop more than in the former case. But inasmuch as the first effect will be to make the cut-off too late, the engine will momentarily develop considerably more horse-power than the normal, owing to which the normal speed will be recovered in less time than with a throttle governor; it may, however, overshoot the mark, and thus oscillations in the speed may take place for a short time. If the load is suddenly diminished, the throttle-valve governor will act more rapidly than the expansion governor; but, on the other hand, there is the steam in the steam chest to deal with. Both arrangements are capable of cutting off the whole steam supply from the engine; hence the recovery to normal speed will occupy practically the same time in both.

It appears, therefore, that in a simple engine, the regulation when dealing with suddenly changing loads, is, on the whole, as good with a throttle governor as with an expansion governor.

In a compound engine with receiver, when the load is suddenly increased, the receiver has to be filled to the pressure corresponding with the increased load before the low-pressure cylinder can do its fair share of the work; and the increase of the load may be so considerable that, even with the admission of the full boiler pressure, the power developed in the high-pressure cylinder may, if the engine is governed by the throttle valve, be insufficient to make up the difference, as is illustrated in Figs. 3062 to 3065, and this loss of time will cause a considerably greater reduction in speed than in a simple engine. If, however, the engine is governed by the expansion, the cut-off in the high-pressure cylinder will become later than is necessary for the load, so that not only will this cylinder do more than its fair share at first, but, what is equally important, the receiver will also be more rapidly filled, thus enabling the low-pressure cylinder sooner to do its proper share, as shown in Figs. 3066 to 3069. Clearly, therefore, the reduction of speed will be less than with throttling. When, however, the increase of load is comparatively small, the greater sensibility of the throttle governor will cause less reduction in speed. It is evident, therefore, that there is some particular increase of load, which is equally well dealt with by either form of governor, so far as regards reduction in speed; and that for a smaller increase

the throttle valve has the advantage; for a greater increase, the expansion governor.

The effect of suddenly and largely diminishing the load on a compound engine with receiver, if governed by the throttle valve, would be nearly to shut off the steam supply altogether; the speed, however, would still increase for a time, owing to the steam already in the receiver and in the steam chest. On the other hand, if the engine is governed by the cut-off, the steam supply to the high-pressure cylinder is at once entirely cut off, should the diminution of load be so great as to need this, no matter what the pressure in the steam chest may be; and thus only the steam in the receiver has to be dealt with. Unless, therefore, the governor acting on the throttle valve is far more sensitive than that acting on the expansion, the speed of the engine will momentarily rise, more in the former case than in the latter. The same arguments apply to a triple-expansion engine with receivers, the effect of the second receiver being added; and it is clear, therefore, that the change of speed produced by an equally sudden change of load will be greater in such an engine than in a two-cylinder compound engine with receiver; and this will be the case whether the engine is governed by the throttle or by the expansion.

In certain special instances advantage in the way of economy can be obtained by materially reducing the speed of the engine as the load is diminished. To effect this the adjustment of the governor must be made whilst the engine is running. This can be done with comparative ease with a throttle-valve governor; but the powerful shaft governors required, as a rule, for expansion governing in high-speed engines are more difficult to adjust whilst running, although there are arrangements for doing this.

Having compared in a general way the relative effects of expansion and throttle governing on the economy and closeness of governing of an engine, the author now purposes applying the results of this comparison to a few typical cases which occur in practice. Reviewing what has been said, it will be seen that the nature of the load is the most important factor in deciding whether the engine should be governed by the throttle or by the cut-off; and if the conditions are such that the most economical load of the engine ought to be less than the full load, or that the engine has to be overloaded for short periods of time, or that the load is subject to sudden and considerable fluctuations, under any such conditions it is better that the governor should act on the cut-off.

ENGINE GOVERNING.*—At the conclusion of the reading of this paper, Captain Sankey explained the modifications which had been introduced into Fig. 3061 of his diagrams, owing to an oversight in copying the diagram from the original. The difference, however, would not affect the validity of his arguments. He stated that the outcome of the paper as a whole showed the great advantage of expansion gear was that it made it possible to work the engine above the economical load.

During the discussion that followed, the first speaker was Mr. John S. Raworth of the Brush Electrical Engineering Company. He commenced by saying that he always looked forward to a paper from Thames Ditton with the greatest interest, and when he received a copy of Captain Sankey's memoir and saw that he advocated automatic expansion, he could not but exclaim, "Is Saul, also, among the prophets?" He was very glad to find that Thames Ditton, who had previously advocated throttling, now declared for automatic expansion. He did not, however, agree with everything that was contained in the paper. He took no exception to the results of the diagrams, and wished to bear testimony to the solid merits of the paper, although the author had, perhaps, failed to justify its title.

The speaker thought that the paper might be summed up in the syllogism that the most economical engine had always automatic expansion; that automatic expansion was sometimes the best; that the most economical engine was, therefore, sometimes the best.

The rest of the paper was occupied in balancing the advantages of an economical engine against the disadvantages of a badly governed engine. The author had stated that, above speeds of 150 revolutions per minute, "variable expansion gears being no longer of the trip class require considerable power to work them, as a rule; and it is usual to employ powerful shaft governors for the purpose. Such governors are clearly more expensive than throttle-valve governors, and are probably also less sensitive. The comparative simplicity of throttle-valve governors, and their greater sensitiveness under such circumstances, are, in fact, their great recommendation." Again, later on he had said: "Expansion gear driven by a shaft governor is clearly more difficult to manage in this respect [*i.e.*, in respect of the power in the governor to overcome friction] than a throttle governor." The author had also stated that "when the increase of load is comparatively small the greater sensibility of the throttle governor will cause less reduction in speed. It is evident, therefore, that there is some particular increase of load which is equally well dealt with by either form of governor, so far as regards reduction in speed; and that for a small increase the throttle valve has the advantage; for a greater increase, the expansion governor."

Mr. Raworth considered it necessary to repeat these passages, as the paper had not been read in full. The speaker's experience was that the crank-shaft governor was better than the throttle-valve governor as 3 to 1. He had bought a large number of the latter, but could scarcely ever get a better result, in regard to variation of revolutions between light load and full load, than 2½ to 3 per cent., whilst with the shaft governor the variation would be no more than 1 per cent. In America the shaft governor was largely used; he would mention the Woodbury, Buckeye, and McEwan engines. The firm manufacturing the latter would sell engines on the guarantee that there would be a variation of no more than one revolution. The speaker gave an instance of the working of an engine with an automatic expansion governor fitted to an 800 horse-power engine having a high-pressure piston-valve weighing between 3 cwt. and 4 cwt.

In this case the speed at full load of 250 amperes, or 500 kilowatts, was 146 revolutions per minute, and when the load was reduced to 50 amperes, or 100 kilowatts, the revolutions were but 148 per minute. Later on they were able to get the revolutions to 152 either with light or heavy load, but the governor was then hunting all the time. He did not think it necessary to multiply

Compound Receiver Engine. Effect of a Sudden Increase in Load.

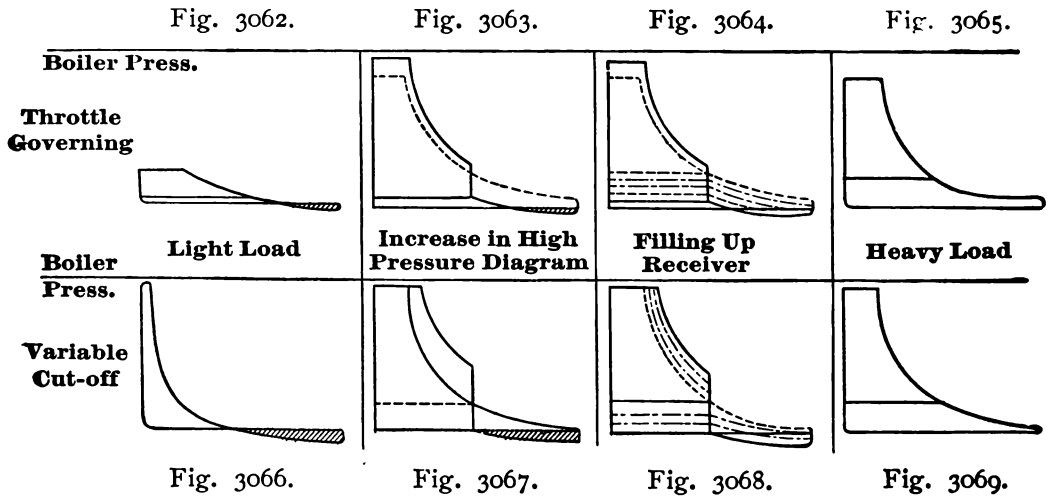

* From "Engineering," February 8, 15, 22, 1895.

instances, as the proof was overwhelming in favor of the crank-shaft governor.

The author had said that if "the engine is governed by the cut-off, the heavier moving parts of the governor, if of the flywheel kind, will increase the interval between the change of load and the action of the governor, so that the speed of the engine will drop more than in the former case"—*i.e.*, when governing is by the throttle. The speaker disagreed with what was said about the heavier moving parts increasing the interval between the change of load, and, as an illustration, he supposed a case in which two weights were dropped from the top of a shot tower, one weighing, say, 2 oz. and the other 2 cwt. If Captain Sankey was right in his contention, the 2 oz. weight should reach the bottom before the heavier mass; whereas, excepting for the effect of the atmosphere, they would both take the same time in falling. In regard to this question of sluggishness he would point out that with governing by throttling the temperature of cylinder walls and passages was reduced when the steam pressure was lowered, and for this reason, when the full load was again thrown on and the engine opened up, the cylinders would be choked with water and the engine would stagger in its working. The author had brought forward the difference in first cost as an argument in favor of the throttle-valve governor. The speaker would give figures on this point taken from the books of his firm. The cost prices, including incidentals for the governors, which had been made for an 80 horse-power engine, were: for the throttle-valve governor, £9 17*s.* 8*d.*, and for the automatic expansion governor, £12 8*s.* 4*d.* These were the total prime cost. The real difficulty in regard to the expansion governor was that of arranging the details to suit the design of special engines. The speaker would, therefore, prefer this syllogism to the author's: the most economical engine has always automatic expansion; automatic expansion is always the best; therefore, the most economical engine is always the best.

Mr. J. C. Peache, who spoke next, said that the diagrams on the wall were founded on the experiments made by the late Mr. Willans, and it should be noted that in the experiments relating to the action of throttling, trials were made with an engine not fitted with a throttle valve, the reduction of the steam pressure being effected by actually lowering the pressure in the boiler. The point should be noted, as it would lead to some slight modification of the results; there being more total heat in steam when throttled than when raised at initial pressure only. In regard to automatic expansion, he wished to point out that automatic expansion gear was in this country usually only fitted to the high-pressure cylinder. For large powers, especially with electric traction, he thought a better form of expansion gear should be introduced. There would be found in America automatic expansion gear to each cylinder. The introduction of this arrangement was largely due to the bursting of flywheels in certain cases through the governor not acting sufficiently early. A better distribution of steam in the cylinders was also obtained by the same means, and the engine was as much under control as if it had only a single cylinder. Another advantage was that the turning moment in the crank-shaft was more equal. He would ask the author if, in the experiments referred to in the paper, the cut-off remained constant in the intermediate and low-pressure cylinders, to which question Captain Sankey replied in the affirmative.

The speaker next went on to describe an arrangement of automatic expansion gear which had been applied to the engines that had been installed for driving the electric lighting plant at Cardiff. This he illustrated by a wall diagram, which showed that the governor operates the valve of a small steam cyclinder through a floating lever, the arrangement being such that for each position of the governor there is a corresponding position of the piston of the steam cylinder.

Mr. Paul, of Dumbarton, referred to the effect of early cut-off in producing excessive vibration at light loads.

ELECTRIC LIGHT ENGINES.*—In a well-designed central station there will be a number of engines principally of one size, and a few smaller engines. The fluctuations of load, although rapid at times, are approximately known beforehand, because they follow with more or less accuracy a previously ascertained load curve. It is, therefore, possible at all times so to work the engines that the load on those running is approximately their economical load. Under these conditions expansion governing has no advantages, if the engines are working non-condensing, because in this case, as already pointed out in reference to Fig. 3061, the economical load is obtained with so high a mean pressure that, except with unusually high boiler pressures, the highest mean pressure that can be obtained gives the best economy. If, however, the engines are condensing, the conditions are considerably changed; because, as already seen, the economical load is now obtained with a much lower mean pressure, namely, from 28 lb. to 32 lb. mean pressure, according to the boiler pressure. Supposing that the engines are mechanically designed to be able to run continuously with 40 lb. mean pressure, and for short periods with 50 lb. mean pressure, it is then possible to run them at powers materially greater than their economical load; and this tends to economy, because on a rising load fresh engines can be started later and with more deliberation, and on a falling load superfluous engines can be stopped sooner. In order to work the engines in this manner—that is, with best economy at 28 lb. to 32 lb. mean pressure and with power to overload—it is obviously necessary to be able to alter the cut-off. Hand gear would, in this instance, answer the purpose; but automatic expansion gear is undoubtedly preferable.

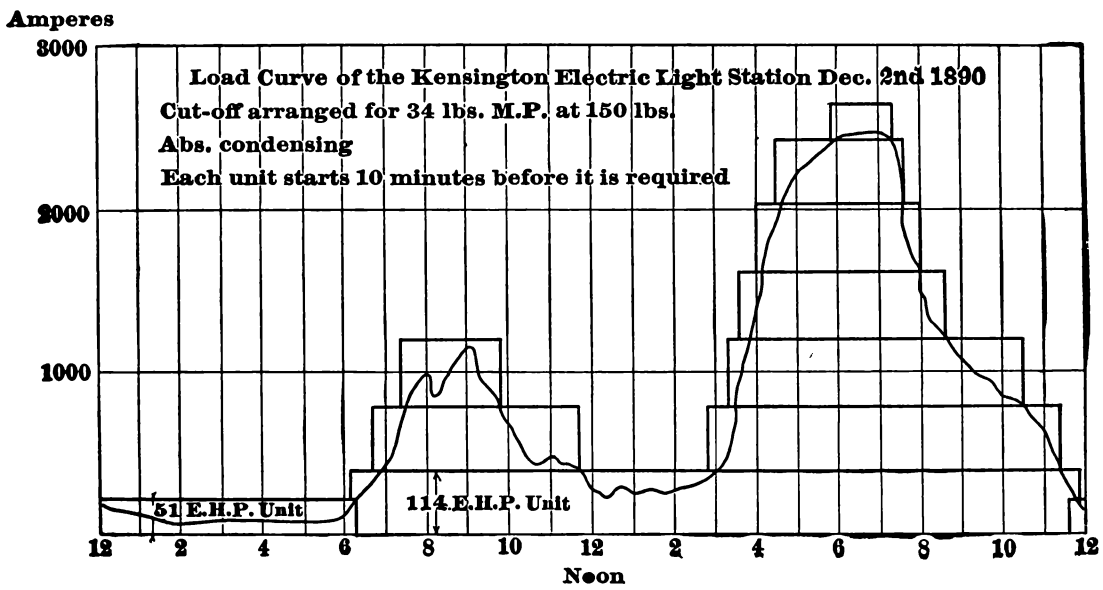

Fig. 3070.

In order to obtain some idea of the economical gain of expansion governing under such circumstances, the following example has been worked out. The load curve chosen is that for twenty-four hours at Kensington electric light station on December 2, 1890, which was first published by Mr. Crompton in his paper read before the Institution of Civil Engineers on April 7, 1891, and which has done duty many times since. It is assumed that each of the principal engines in the station is capable of develop-

* By Captain H. R. Sankey. From "Engineering," March 15 1895.

ing 140 electric horse-power with 40 lb. mean pressure in the cylinders; and that there are two smaller engines, each capable of developing 70 electric horse-power with the same mean pressure; these are somewhat larger units than those actually in the station. It is also supposed that the pressure available at the engines is 150 lb. absolute per square inch.

Fig. 3070 shows the times at which the different engines would be started and stopped when the governing is done by the throttle, the cut-off being arranged for a mean pressure of 34 lb. per square inch; and from this, with the help of the constant-expansion steam consumption straight line given in Fig. 3058, the water required to be evaporated for the engines only can be calculated, and is found to be 110,330 lb. for the twenty-four hours.

Fig. 3071 shows the effect on the times of starting and stopping when the engines are governed by the cut-off, and are allowed to be overloaded up to 50 lb. mean pressure for half an hour, assuming that the dynamos are designed to stand this overload. As before, the total water required in twenty-four hours can be calculated with the help of the constant-pressure consumption curve given in Fig. 3058, and it works out to 87,240 lbs.

In the particular instance here chosen it will be seen that at the time of maximum load six units are running with expansion governing as against six and a half with throttling. This points to the fact that expansion governing tends to reduce the number of engines required in an electric light central station; in other words, it can better be afforded to overload engines with expansion governing than engines with throttle governing, for in the former event the economical ill effects of the overload are but temporary, while in the latter they are permanent. On the whole, therefore, it can be stated that for large central electric light stations, when working non-condensing, throttling is as good as expansion governing; but when condensing, governing by the cut-off has a superiority.

An electric light station containing only one engine will evidently be worked most economically by altering the cut-off, if the engine is condensing. If the engine is non-condensing, the case is not so clear. A great deal depends on the boiler pressure that can be obtained; and it will be observed that the power of overloading the engine is not of much advantage, because in all probability the time of overload would last too long to be permissible, unless there were a peak in the load curve, as shown by the dotted line in Fig. 3072; in which case, of course, expansion gear would be of use. Thus, one of the factors determining the relative merits of the two methods of governing, as applied to this particular kind of work, is the shape of the load curve; but as it is impossible to know beforehand what the shape will be, it is best in practice to arrange the engine with expansion gear, because this will meet all cases, whereas throttle gear will not. In electric light stations of medium magnitude, containing, say, three or four engines, throttle governing will give as good results as expansion governing if working non-condensing; if condensing, expansion governing will be best.

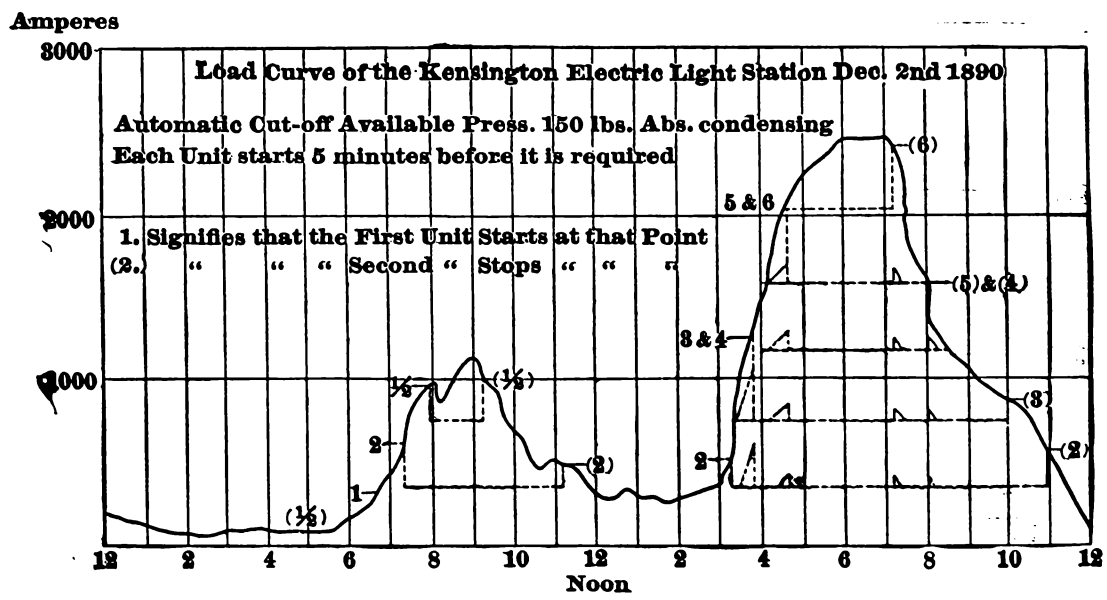

Fig. 3071.

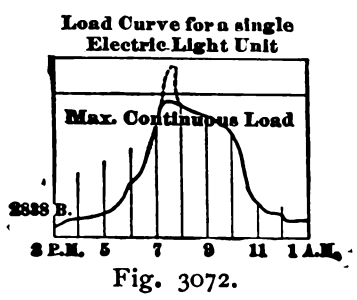

Fig. 3072.

ELECTRIC TRAMWAYS AND RAILWAYS.—The most important case, however, is that of electric tramways and railways. A glance at the typical load-curves illustrated in Fig. 3073, 3074, and 3075 will show that the machinery cannot be worked like that of an electric light station; that, in fact, all the engines, except the spare ones standing in reserve, must be kept running; and that they are alternately fully loaded and lightly loaded at short intervals of time. The power of being able to overload the engines for a short time, as can be done with expansion governing, is here latter allows of momentary excessive overload. The second difficulty occurs whilst the machinery is running, should the load fluctuate considerably in the neighborhood of the full load. If the engine is governed by the throttle, directly the full load is overstepped the speed of the engine must drop; the available horse-power will thus be diminished, and if the load remains only for a short time above the full load, it must inevitably pull up the engine; or rather it would do so, were it not that the fuses in the circuit would blow, owing to the abnormal increase in the current due to the reduction of counter electromotive force in the motor. If, on the other hand, the engine is governed by the cut-off, the overload on the motor will be met by an overload on the engine, and the difficulty will disappear. This is evidently a case where expansion governing is far preferable to throttling, and in fact may be said to be necessary; although throttle governing could be made to answer, by fixing the cut-off late enough; but then the economy of working would be greatly reduced.

of the utmost importance, especially from the economical point of view; and there is the incidental advantage, as previously explained, that expansion gear responds more readily to sudden changes of load. This being so important a case, it may be well to illustrate it by a numerical example. Figs. 3073, 3074, and 3075 are typical load curves for ten minutes on an electric railway; and it will be noticed that in each of the three figures a peak of the same height is shown at A, so that the same number of engines have to be worked in each instance. It is proposed to calculate the water required to be evaporated for the engines during each ten minutes under the following five different conditions: (1) the engines are governed by the throttle valve with the cut-off arranged for 35 lb. mean pressure, when the full available pressure is used; (2) the engines are governed by the throttle valve with the cut-off arranged for 45 lb. mean pressure, when the full available pressure is used; (3) the engines are governed by the throttle valve with the cut-off arranged for 50 lb. mean pressure, when the full available pressure is used; (4) the engines are governed by the cut-off; (5) the engines are governed by the cut-off from 20 lb. mean pressure upwards, and by the throttle valve from the same mean pressure downwards.

In Fig. 3073 there are three peaks of nearly the same height as A, and the engines are comparatively well loaded during the whole ten minutes. In Fig. 3074 the other peaks are of medium height, and this figure represents a medium load on the engines.

In the first case—throttle governing with the cut-off arranged for a maximum of 35 lb. mean pressure—it is necessary, as shown in Fig. 3073, to keep six engines running, and since they are working with constant cut-off, the consumption at all loads will be represented by a straight line, and, therefore, the total actual consumption will be the same as if the engines were working under a constant load equal to the average load.* For the ten minutes under consideration the average load is found to be 3,116 indicated horse-power; hence the average mean pressure is $35 \times 3{,}116 \div (6 \times 980) = 18.55$ lb. per square inch. Referring to Fig. 3076, it will be seen that the water consumption of the standard consumption engine at this mean pressure is 312 lb. per hour; hence the total consumption for the ten minutes is $(312 \div 6) \times 6 \times 980 \div 35 = 8{,}740$ lb. The water consumption for Figs. 3074 and 3075 can be found in exactly the same way, and the result is given in Table I.

In the second case—throttle governing with the cut-off arranged for 45 lb. mean pressure—it is found that this increase in the available power of each engine allows of stopping one engine, keeping only five running. The consumption of each engine is now represented by the Willans line W_2, and is greater than in the first case; nevertheless, the total consumption is less than in the first case, as shown in Table I.

In the third case, throttle governing with the cut-off arranged for a maximum of 50 lb. mean pressure, only four engines are

Electric Railway Typical Load Curves.

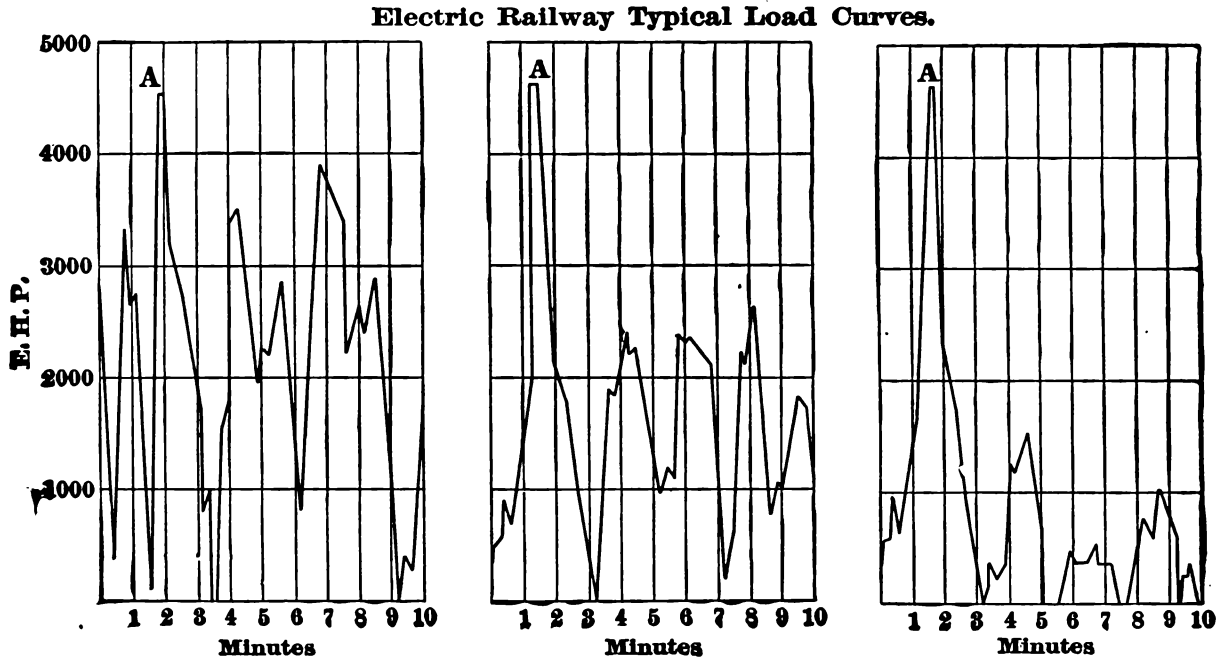

Fig. 3073. Fig. 3074. Fig. 3075.

Lastly, Fig. 3075 denotes only a light load on the engines. It will be supposed that each engine is capable of developing 980 indicated horse-power at 35 lb. mean pressure, 1,260 indicated horse-power at 45 lb., and 1,400 indicated horse-power at 50 lb. mean

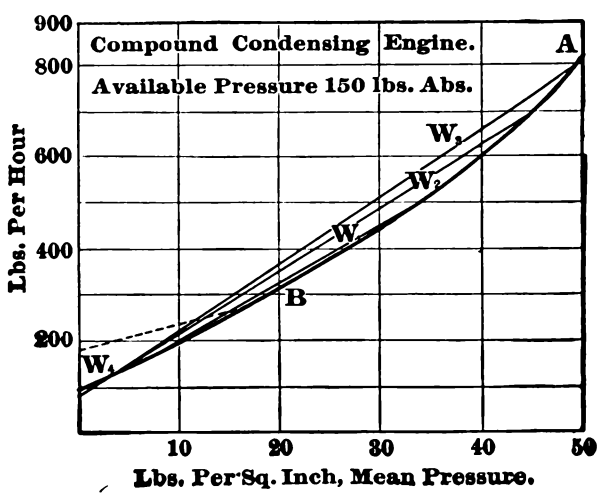

Fig. 3076.

pressure; further, that the engines are condensing and that the full available pressure is 150 lb. absolute; it will then be possible to use the consumption curve given in Fig. 3058, which has been reproduced in Fig. 3076.

required, because they can now develop for short periods a sufficient power; but as the cut-off must be later, the consumption at all loads will be greater, as shown by the Willans line marked W_3 in Fig. 3076. The average indicated horse-power, however, is smaller, because the losses in the dynamo and engine of the fifth and sixth set are saved. The average thus becomes 2,783 indicated horse-power; and the total water consumption for the ten minutes comes out to 8,250 lb. for Fig. 3073.

In the fourth case—expansion governing—the consumption for the short period heavy load will evidently be the same as in the third case, as seen from Fig. 3058; but owing to the cut-off being altered, considerable economy is obtained at the lighter loads, at which the engines do most of their work. The total water cannot, in this case, be obtained from the average mean pressure, because the consumption line is no longer a straight line, but has to be ascertained from the consumption for each element of the load. The result is 7,200 lb. for the ten minutes for Fig. 3073, as given in Table I.

In the fifth case—combined expansion governing and throttling—the consumption is given by the constant-pressure water-consumption curve down to 20 lb. mean pressure; and for lighter

* This result follows at once from the Willans straight line law; and, moreover, the author obtained an experimental proof, as mentioned in his remarks upon Dr. E. Hopkinson's paper on the City and South London Electric Railway.

loads by the Willans line marked W_4 in Fig. 3076. The calculations are similar to those in the previous cases, and the results are given in Table I.

TABLE I.—ELECTRIC TRAMWAYS AND RAILWAYS: WATER CONSUMPTION DURING TEN MINUTES.

Maximum Electrical Horse-power in each Case, 4634.	Fig. 3073. Average Electrical Horse-power, 2117.				Fig. 3074. Average Electrical Horse-power, 1527.				Fig. 3075. Average Electrical Horse-power, 750.				Unit Sets of Engines and Dynamos required.
Conditions of Governing.	Indicated Horse-power.		Water Consumption.		Indicated Horse-power.		Water Consumption.		Indicated Horse-power.		Water Consumption.		
	Maximum.	Average.	Total.	Increase.	Maximum.	Average.	Total.	Increase.	Maximum.	Average.	Total.	Increase.	
	I. H.-P.	I. H.-P.	Lb.	P. C.	I. H.-P.	I. H.-P.	Lb.	P. C.	I. H.-P.	I. H.-P.	Lb.	P. C.	Units.
Cut-off fixed for 35 lb. mean pressure	5633	3116	8740	21.6	5633	2526	7490	27.8	5633	1749	5830	38.2	6
Cut-off fixed for 45 lb. mean pressure	5466	2950	8590	19.6	5464	2359	7150	22.0	5466	1582	5300	25.8	5
Cut-off fixed for 50 lb. mean pressure	5300	2783	8250	14.8	5300	2193	6730	14.8	5300	1416	4750	12.7	4
Variable cut-off	5300	2783	7220	0.5	5300	2193	5895	0.6	5300	1416	4560	8.2	4
Variable and fixed cut-off	5300	2783	7185	0.0	5300	2193	5860	0.0	5300	1416	4215	0.0	4

A comparison of all the results obtained, Table I., shows that the fifth arrangement is the best for all three typical load curves. On the mere question of economy of water evaporated it will be noticed that there is, perhaps, not so much difference between the first three arrangements as might be expected. The third arrangement has, however, the great advantage that only four engines are required. The advantages of expansion governing are striking ; a considerable saving in feed water is effected, and two engines less are needed than in the first arrangement. In fact, this is just the case where expansion governing might almost be said to be a necessity.

MILL ENGINES.—Generally speaking, a single engine only has to be considered in mills; and the load may either be almost unchanging, or changing slowly through considerable ranges, or

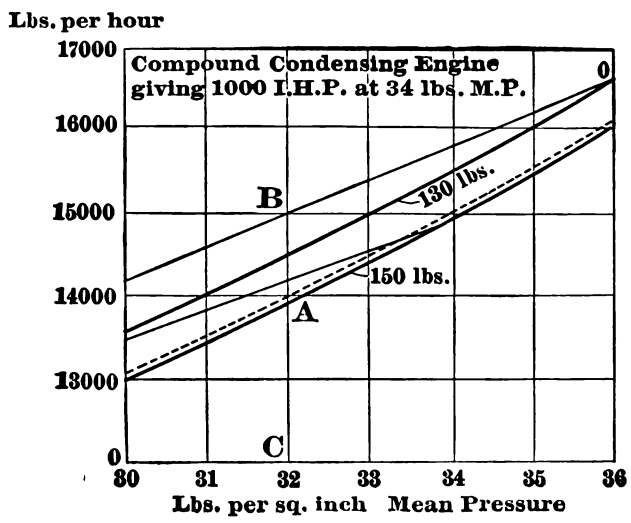

Fig. 3077.

changing rapidly, or even suddenly. Although an absolutely unchanging load is never met with in mill work, yet in cotton mills the greatest ordinary daily change probably does not exceed 10 or 12 per cent., and in flax mills 25 per cent.

The case where the load does not change more than about 12 per cent. will now be considered. If it were possible to maintain a constant steam pressure at the engine, then the cut-off in the high-pressure cylinder could be so fixed that the engine would develop at this pressure the maximum indicated horse-power required. Supposing, for instance, that the steam pressure at the engine is maintained constant at 150 lb. absolute, and that the maximum load requires 34 lb. mean pressure, so that with 12 per cent. reduction the minimum load would be obtained with 30 lb. mean pressure ; then the lines of water consumption for a compound condensing engine would be as shown in Fig. 3077, and at 32 lb. mean pressure, which, for the sake of argument, may also be supposed to be the average load, the gain in economy, due to expansion governing, is found by reference to Fig. 3077 to be 1.83 per cent. It is evident, however, that in practice the boiler pressure cannot be maintained constant, and that allowance ought to be made for a fall, say, of 20 lb.; and in order to meet the contingency of maximum load coming on with minimum boiler pressure, the cut-off must be made later than above arranged for. Furthermore, if any doubt exists as to what will be the maximum load, an additional allowance must be made by fixing the cut-off still later, which will still further reduce the economy at all loads, as shown by the upper consumption line for constant cut-off in Fig. 3077 ; and it will be noticed that this will be the water consumption of the engine, whether the boiler pressure be 150 lb. or 130 lb., or any intermediate pressure. With expansion governing, however, it is unnecessary to make any allowance for uncertainty in the maximum load ; but the reduction of 20 lb. in the boiler pressure changes the consumption curve to the upper one in Fig. 3077, and for a smaller reduction of pressure the consumption will lie somewhere between these two extreme curves. In order accurately to compare the economy by the two modes of governing, it is necessary to know in what manner the boiler pressure varies. With careful stoking and regular feed, no material fall in the pressure ought to occur except when cleaning fires ; therefore the curve of average water consumption with expansion governing ought to be much nearer the lower curve than the upper as shown by the dotted curve in Fig. 3077. Thus the consumption at 32 lb. mean pressure, which is supposed to be the average load, is represented by A C, and it follows that in this instance the expansion gear improves the economy in the ratio of B C to A C, or 6.45 per cent.

The case of an engine working against a load which changes slowly through considerable ranges is evidently similar to that of a single electric light engine. The arguments already adduced therefore hold good, and consequently expansion governing is best.

For a suddenly changing load such as that on an engine driving a cement mill or a rolling mill, expansion governing is best adapted, as in the case of engines for electric traction, and for the same reasons, amongst which not the least important is that expansion governing allows of a smaller engine being used, and there is a greater reserve of power to meet emergencies.

EXAMPLES OF ENGINES WITH SHAFT OR WHEEL GOVERNORS.—In the illustrations from 3078 to 3086 are represented the Ames Iron Works' single-cylinder high-speed automatic engine. The lower guide, valve-rod guide, and seats for the main bearing shells are cast in one piece with the engine bed or frame, so that the parts may be made originally in line and readily kept in line as the wear proceeds. A vertical longitudinal section of the engine is shown in Fig. 3079, a cross section in Fig. 3080, and a top view in Fig. 3083.

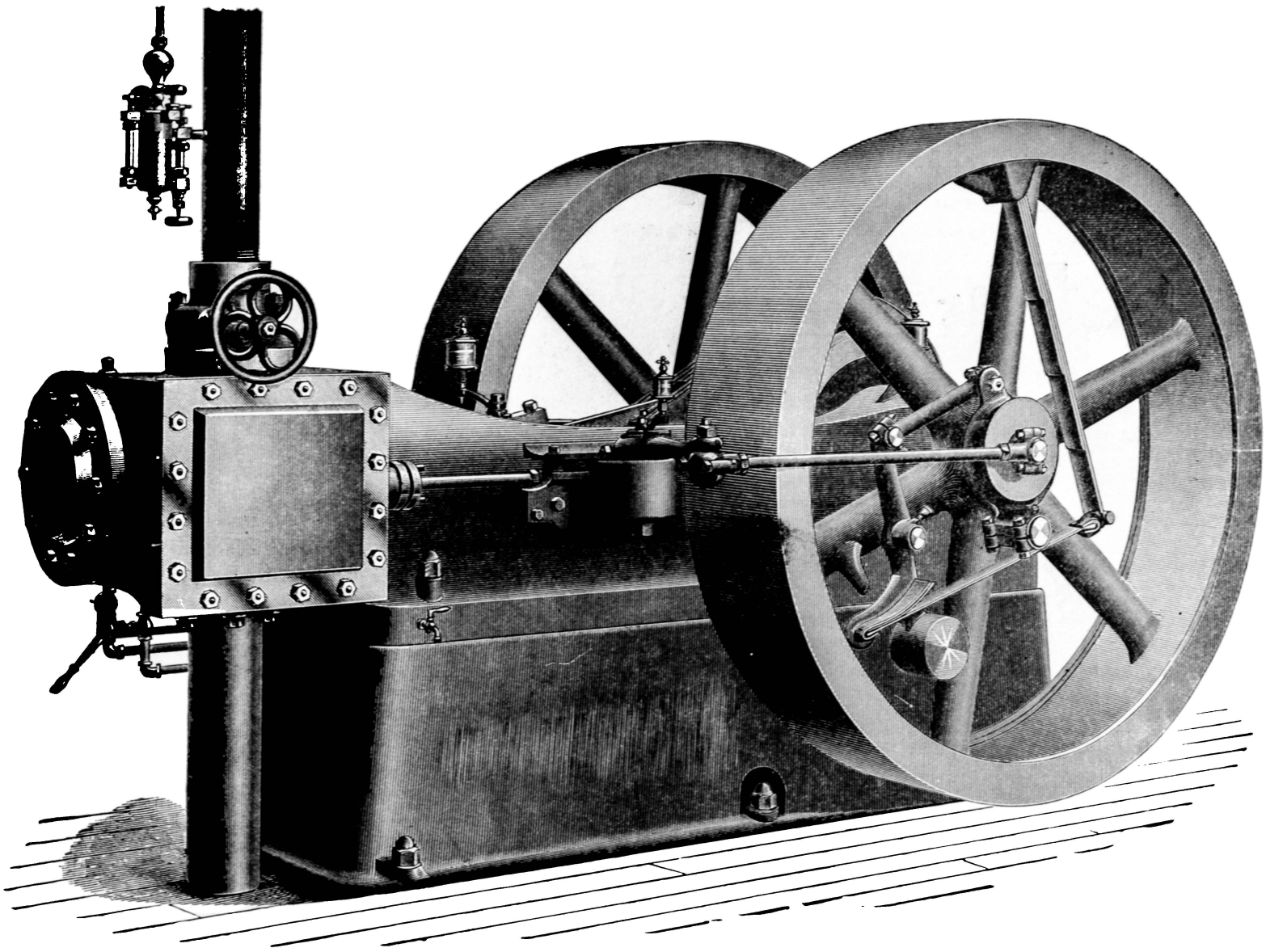

Fig. 3078.

The valve, which is of the design patented by Professor John E. Sweet, of Syracuse, N. Y., and employed in the straight line engine, is a rectangular frame of the class that was shown in Fig. 2879, giving a double port opening for the admission. The valve is balanced as shown in the horizontal and vertical cross sections of the cylinder, Figs. 3081 and 3082, in which *v* represents the valve and P a plate that excludes the steam from the back of the valve. M and N are distance pieces made $\frac{5}{1000}$ inch thicker than the valve, and therefore receive the pressure of the plate P; and it is clear that the valve may slide freely to and fro

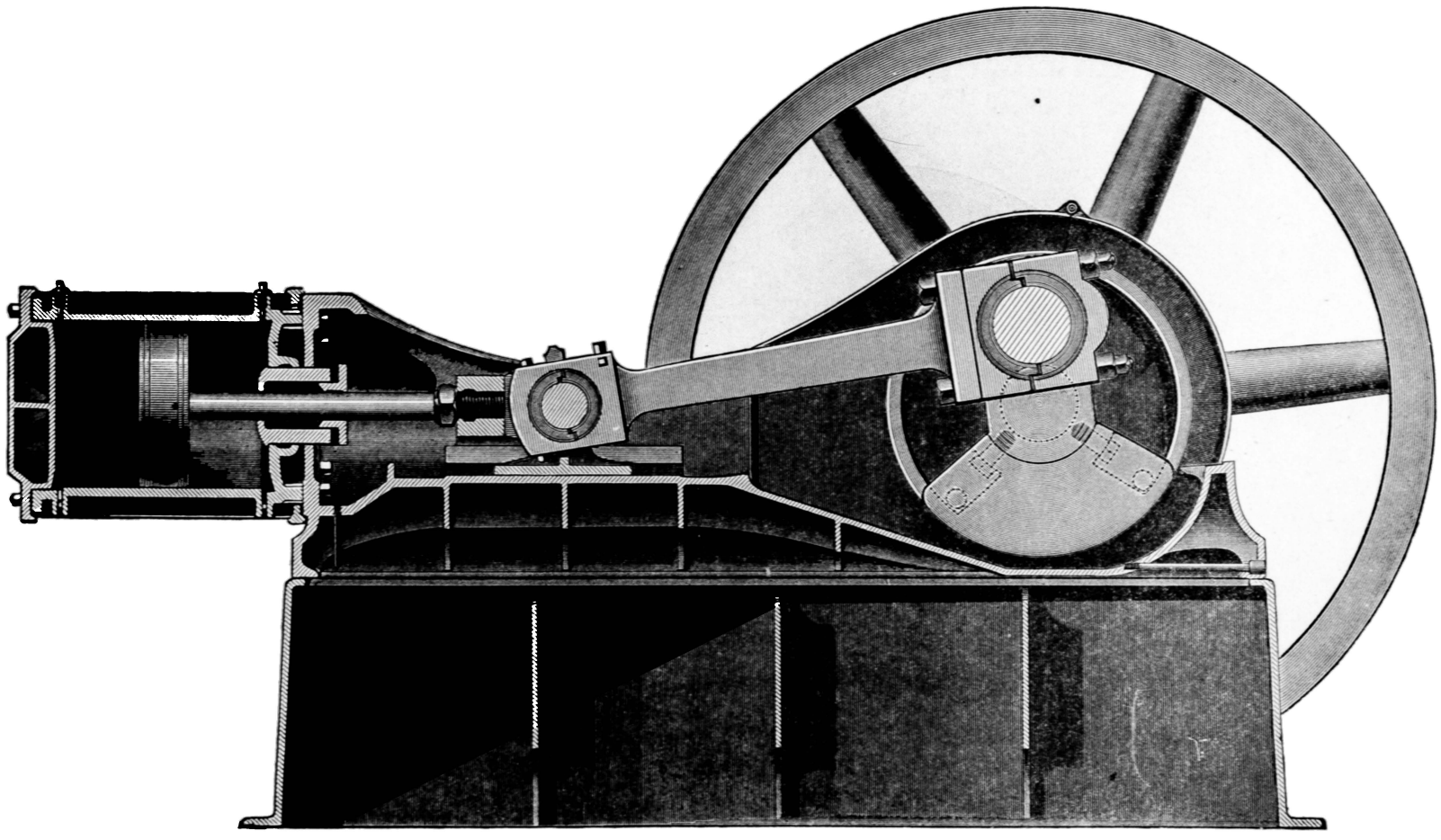

Fig. 3079.

without the steam pressing upon it, save at the ends where the admission occurs in two simultaneous streams, as shown in Fig. 3081 by the arrows at the head end of the cylinder. The wear of the distance piece N and the bottom of the valve which slides on it, in no way, it will be seen, affects the steam-tightness of the valve.

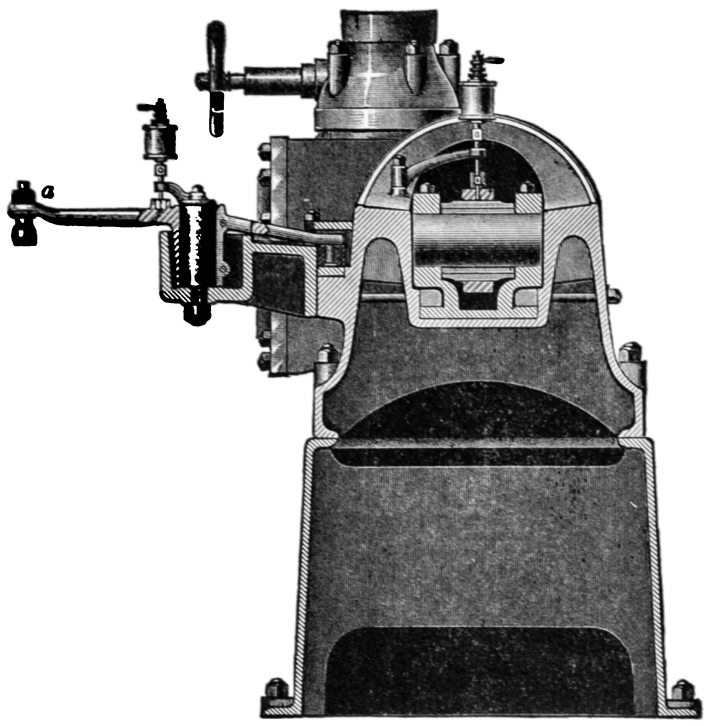

Fig. 3080.

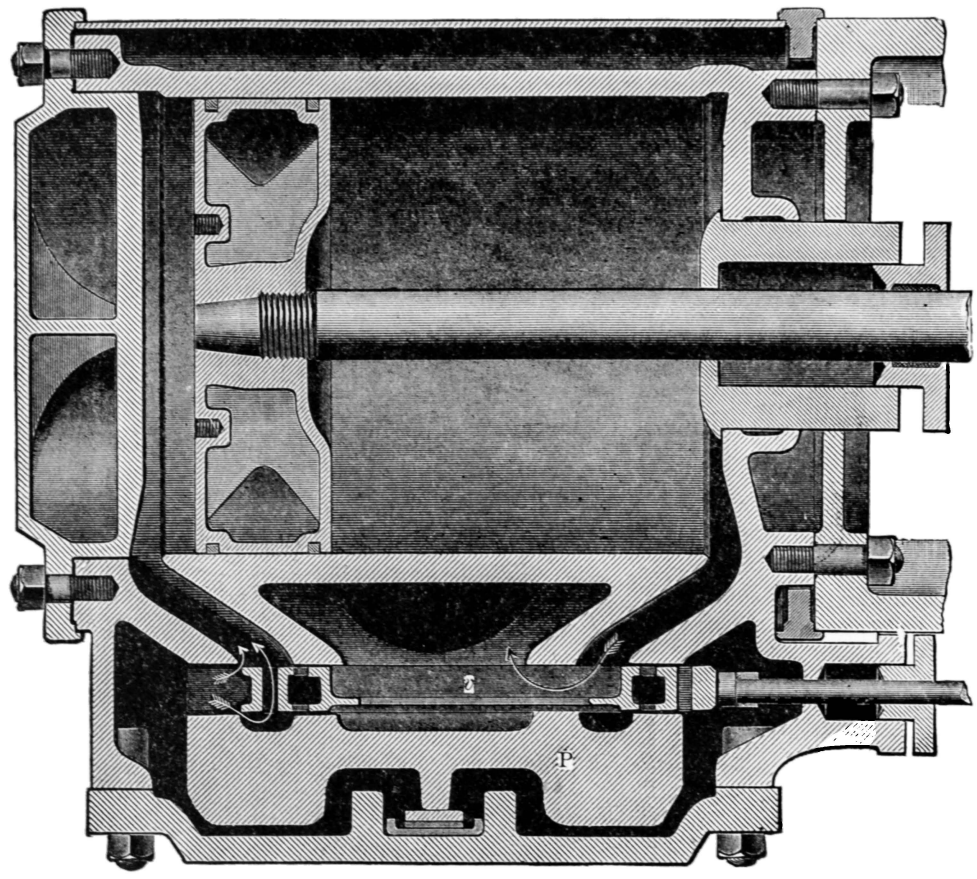

Fig. 3081.

The governor, Fig. 3084, is designed on the *inertia* principle, the effect of which is to give a quick action under sudden changes of engine load. Each part of a governor tends to keep the same speed of revolution irrespective of fluctuations in the speed of the flywheel. Advantage is taken of this by so arranging the governor that, should the speed of the flywheel be slightly checked by a sudden increase of load, the relative movement of the governor parts will give a greater port opening and later point of cut-off, admitting more steam to meet the increased load. The reverse action takes place when the load decreases, as has been explained with reference to the action of shaft governors generally.

The valve motion is as follows: The eccentric rod is connected to a horizontal rocker arm, seen at *a*, Figs. 3080 and 3083. At *c*, Fig. 3083, is, on the rocker arm, an index pointer, and beneath it an index which indicates the point of cut-off at which the valve may be working at any particular time.

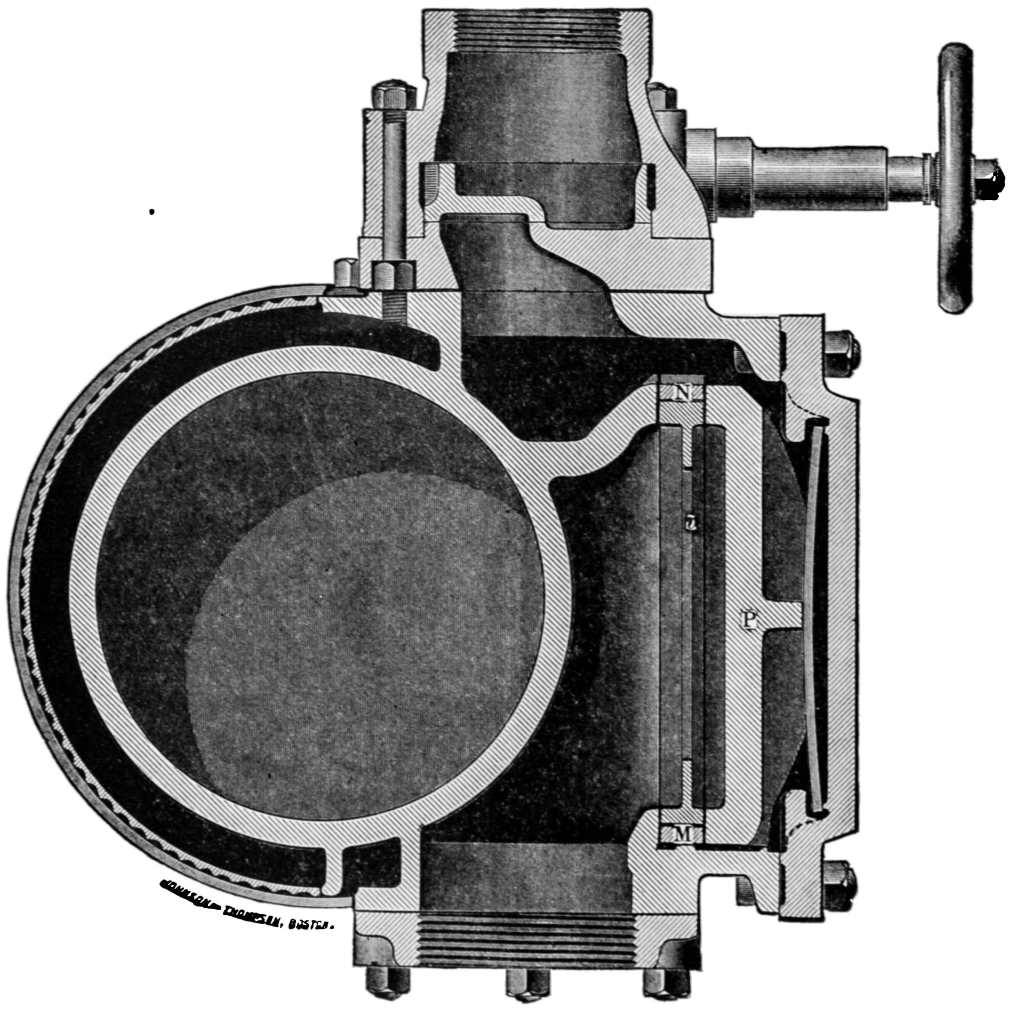

Fig. 3082.

The connecting rod is of open-hearth forged steel; the crosshead end being solid, and the crank end of what is known as the marine engine type, as seen in Fig. 3085. The adjustment of the boxes at the crosshead end is by a wedge moved by an adjusting screw on the top of the rod.

The adjustment of the crank end is secured by means of lock nuts; the outer one of each pair being of finer thread pitch than the inner, a construction which effectually prevents the nuts from working loose, as is apt to be the case when both nuts are of the same thread pitch.

The piston is made as light as is consistent with the necessary strength, and is maintained steam tight by means of two piston rings sprung into grooves in the piston.

The double disk crank, Fig. 3088, is a single forging of steel, cast-iron disks carrying the counterbalancing weights being firmly secured into the crank forging.

The cylinder and valve are oiled by a sight-feed lubricator.

The main bearings and crank pin are oiled as follows: Sight-feed oil-cups are arranged over each main bearing, which feed oil directly to them. There is also a third sight-feed cup upon one of the bearings, which will, when desired, feed oil to the crank pin. A chamber, seen in Fig. 3088*a*, is provided under each of the main bearings, into which all oil, wasting from their outer end, drains. This oil is returned to the bearings by rings which, riding on the shafts and dipping into the chamber below, continually carry up a stream of oil. All oil wasting from the inner ends of the main bearings is caught and carried to the crank pin. The holes through which the oil passes to the crank are one-half inch in diameter, so as not to be readily stopped up. They are also straight throughout their length, that they may be conveniently cleaned. It is not always necessary to use the sight-feed cup provided to feed to the crank pin, as the oil wasting from the main bearings is usually sufficient.

In case of entire failure of the sight-feed cups, the oil chambers referred to could be filled, and the oil rings would keep the main bearings and pin properly lubricated. The crosshead pin is oiled by a sight-feed cup, the oil being caught without waste by a very efficient wiper. The rocker-arm pivot works in a bath of oil, requiring no attention. Grease cups are fitted at each end of the eccentric rod, and for the pivots in the governor, permitting an adjustment which provides efficient lubrication without waste.

Drain cocks are provided both for cylinder ends and for the steam chest. Much water may be drained from the steam chest in starting up without letting it get into the cylinder. The cylinder cocks are connected and arranged to be opened or closed by a single lever.

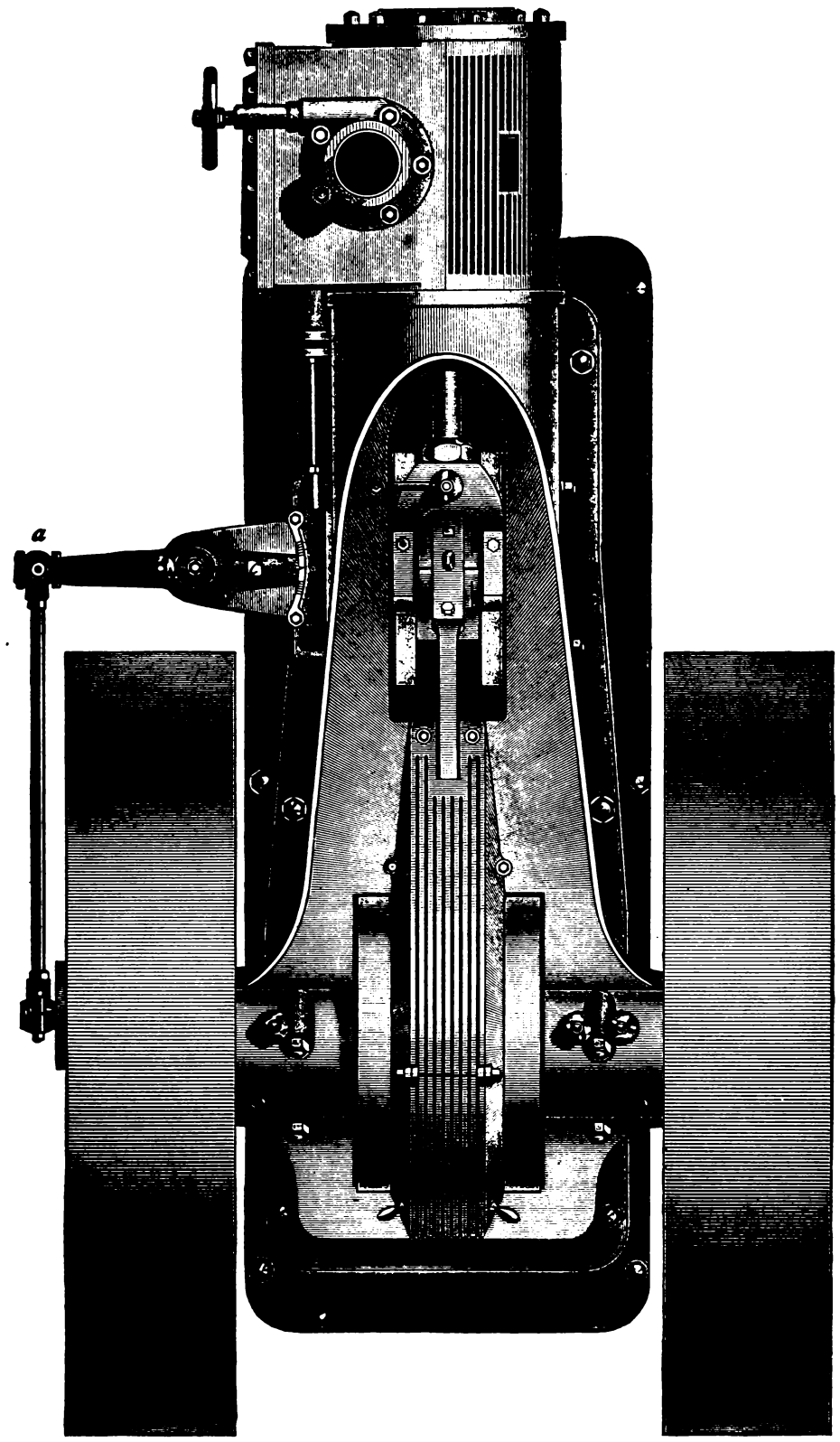

Fig. 3083.

ENGINE BY THE STEARNS MANUFACTURING CO., ERIE, PA.—An engine designed and constructed by the Stearns Manufacturing Co. of Erie, Pa., is illustrated as follows:

Figs. 3086 and 3087 show the two sides of the engine. In the detail views, Fig. 3089 is a horizontal section through the cylinder and valve; Fig. 3090, a vertical section through the same; Fig. 3091, a horizontal section through steam chest above top of valve; Fig. 3092, a view of steam chest, with cover removed, showing back of relief plate; Fig. 3093, an end view of relief plate and wedge; Fig. 3094, an enlarged view of upper adjusting screw, and Fig. 3095, a back view of the valve. In all the views, like letters of reference indicate the same parts.

As will be seen by an inspection of the different views, especially Figs. 3089 and 3090, steam pressure is eliminated from the valve A by the relief plate B on the back, which is supported against steam pressure at top and bottom by a forked or double wedge C, whose length is about equal to that of the relief plate.

It is obvious that a longitudinal movement of the wedges inward will force the relief plate away from valve, and the outward movement of wedges will let it down towards valve. The movement of the wedges, and consequent adjustment of relief plate, is accomplished by the two adjusting screws *l l'*, Fig. 3093, which fit loosely through the cross piece *c* of the wedge and are tapped into the relief plate. The collars *m*, which form part of adjusting screws, are notched on their peripheries as shown in Fig. 3094, and a notch *n* is made on wedge opposite each screw. The collar has 100 notches, and, therefore, admits of a definite degree of adjustment being made, the minimum limit of which is a very minute amount. On all sizes the adjusting screw is 10 threads per inch, and the taper of wedges one inch in ten. One notch on collar, therefore, representing $\frac{1}{100}$ of a turn, moves the wedge lengthwise $\frac{1}{1000}$ of an inch, and the relief plate toward or from valve $\frac{1}{10000}$ of an inch, corresponding to $\frac{1}{20000}$ of an inch on each face of valve.

This device accomplishes the adjustment of the relief plate in a very satisfactory manner, being at once positive and simple, and while the results of the adjustment can be extremely minute, it is quickly done and admits of the valve being made steam tight.

The movement of relief plate in the adjustment is exactly at right angles with the face, or, in other words, it is let down equally at all points. The adjustment is made on the inside of the steam chest. The passages K at the bottom of the chest allow a circulation of steam under the ledge, insuring equal temperatures for ledges *i i'*.

The screw D, which is operated from the outside by handle E, is also used as a means of moving wedges inward and throwing off the relief plate, for a purpose explained hereafter; but the plate cannot be *let down* further than the adjustment of the collars *m* of the screws *l*, Fig. 3094, allow, as the wedges cannot be drawn back further than that adjustment permits.

The exact amount of inward movement is immaterial, and is regulated by the screw *f*, Fig. 3092, which forms the stop for the inward movement of the wedges. This screw taps into the relief plate, and against its head the cross piece of wedge strikes. When the handle E is turned to the left as far as it will go, the wedges are back against collars and are in proper working position. When, on the contrary, the handle is moved to the right, the screw, which works through stuffing box, forces the wedges

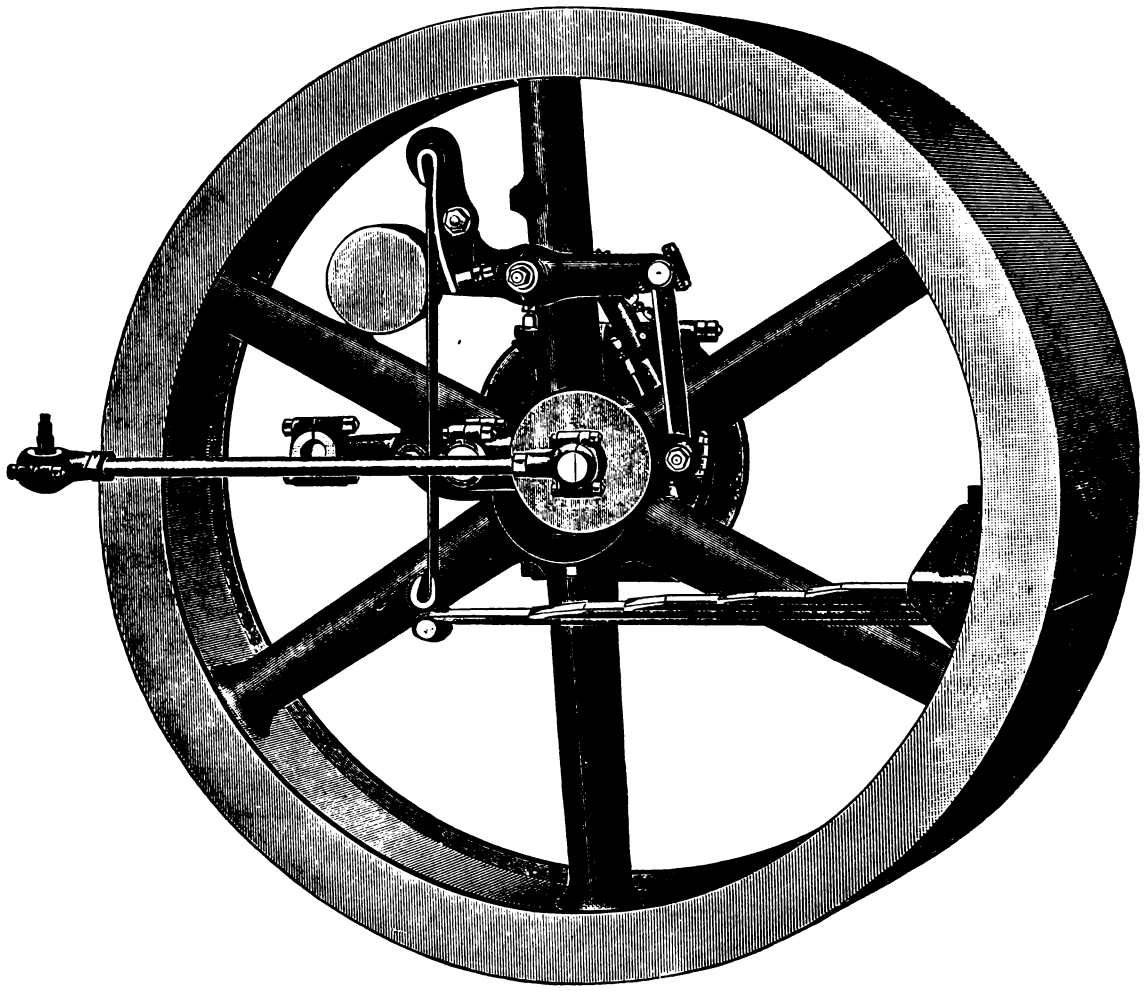

Fig. 3084.

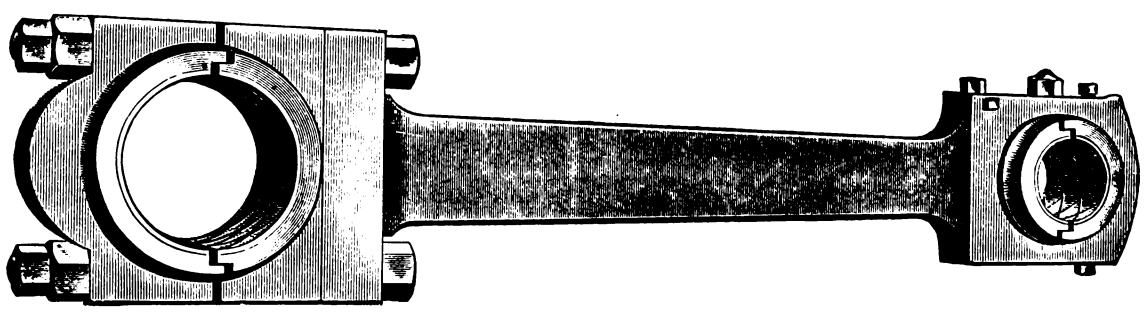

Fig. 3085.

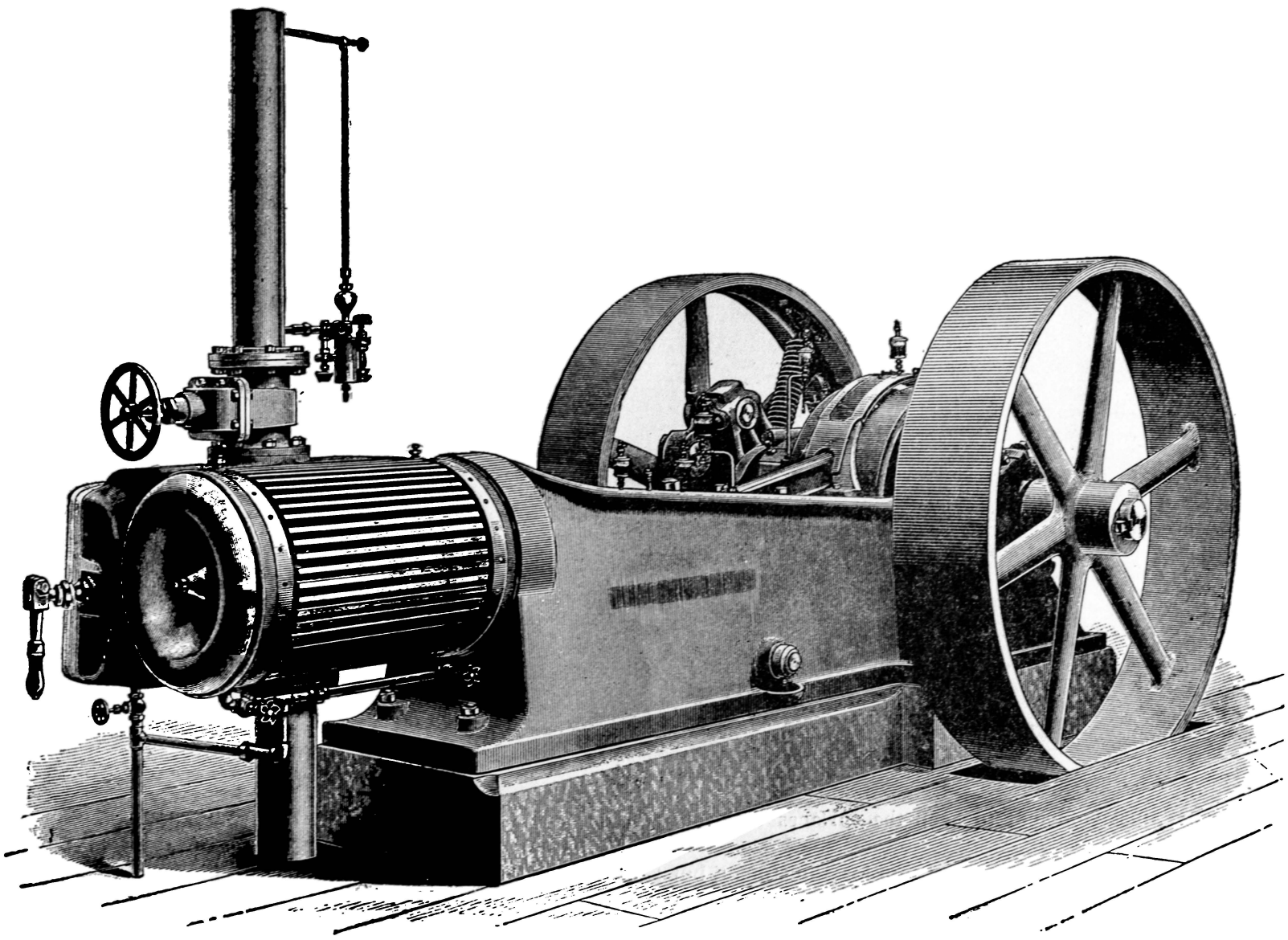

Fig. 3086.

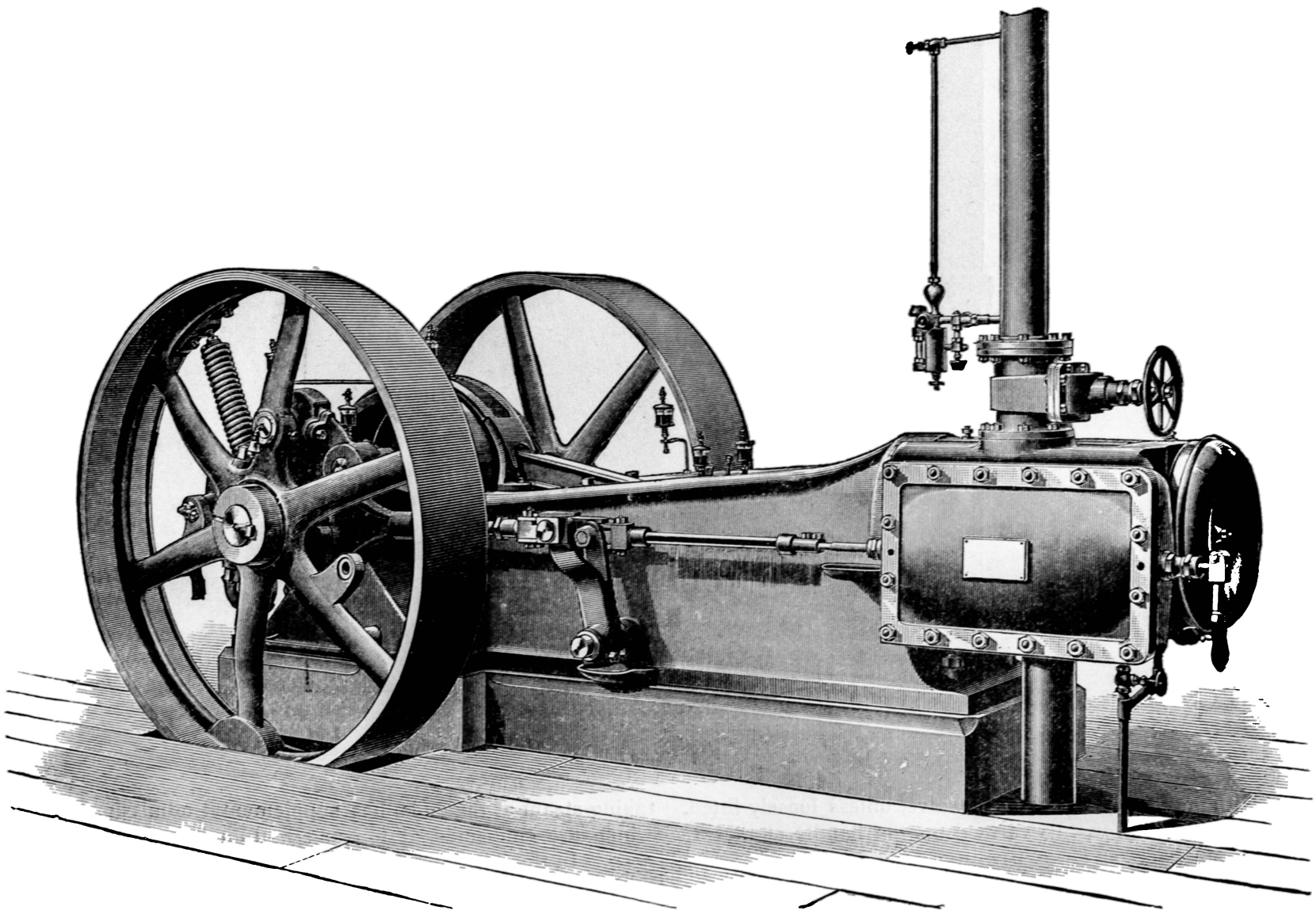

Fig. 3087.

inward and throws off the relief-plate. About one-half turn of the handle is all that is necessary. The handle clamps to the stem of screw D, and is placed in such position that, when down, as in Fig. 3087, the wedges are back as far as the adjustment allows them to be drawn, and the relief plate and valve have their proper working bearing. This position is one of very slight pressure on the valve, just sufficient to keep the surfaces true and bright.

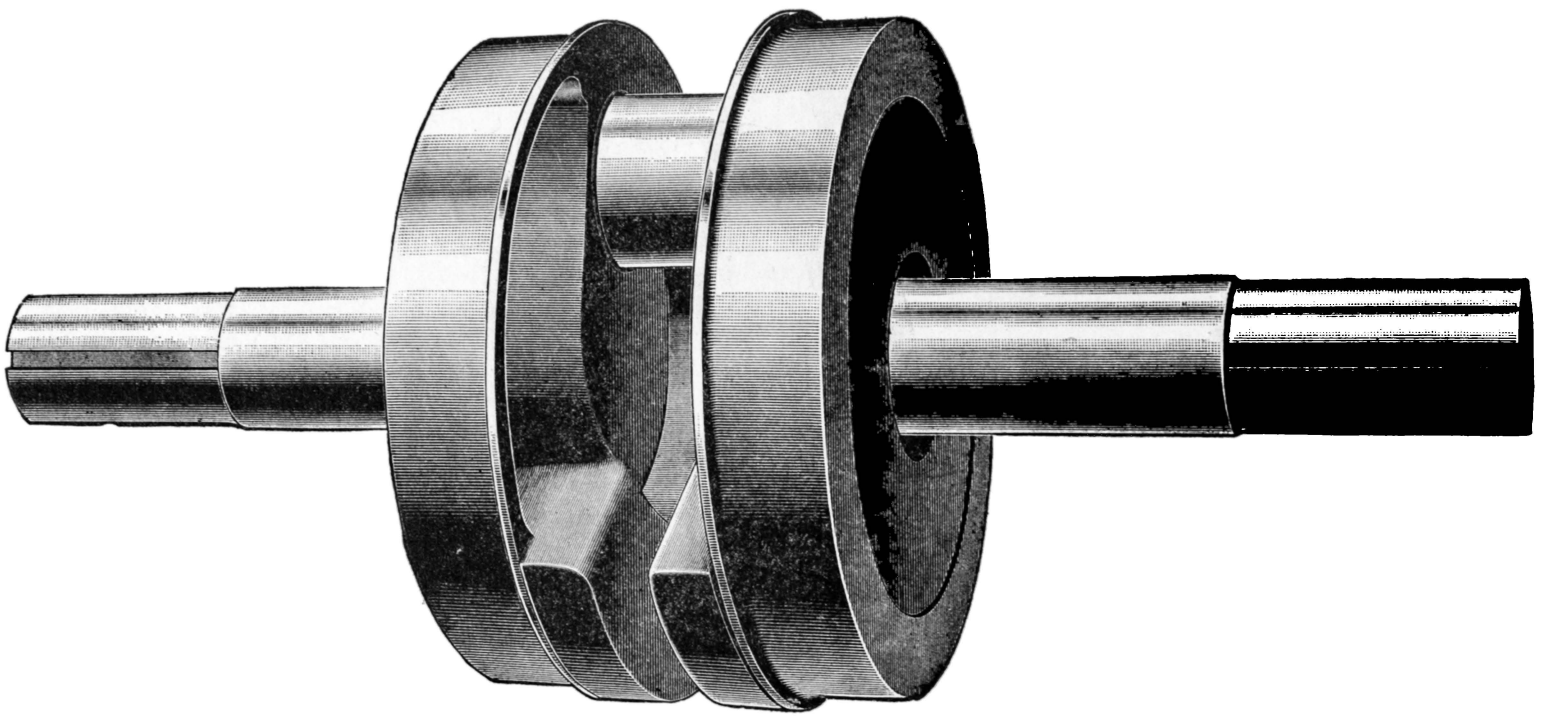

Fig. 3088.

The purpose of this handle and screw is not for adjustment, but to afford a means of separating the valve faces from seats in case they tend to adhere together after engine has been standing over night or longer. This "sticking" of the faces is very liable to occur with any form of balanced valve, unless loosely fitted. After the parts are thoroughly warmed up, the handle should be turned down, or back, as far as it will go.

The faces of valve and relief plate are at a slight angle from a vertical position, so that they lay in place when steam is off, and afford greater convenience when adjusting inside. In case of over-pressure in the cylinder, due to the presence of water, the valve is free to separate from cylinder face and allow the water to be forced into steam chest and exhaust port the same as a plain, unbalanced slide valve, with the difference that it takes the relief plate with it. The danger of accident from water in cylinder does not, therefore, exist in anything like the degree that it does in engines whose construction does not allow the valve to be forced from its seat under any circumstances. The bottoms of ports are slightly lower than bottom of cylinder. Both steam chest and cylinder are provided with drain cocks or valves.

The means of admitting and distributing the steam will be understood by a reference to Fig. 3089. The valve A, besides taking steam at the ends, has supplemental admission ports *a a'*, which are connected at top and bottom by passages *b b'*, Fig. 3090. In the position of piston shown, it has passed the centre at crank end and has moved a short distance toward the back or head end. The crank end of valve is open for admission of steam, which is entering cylinder port H' directly past the end of valve,

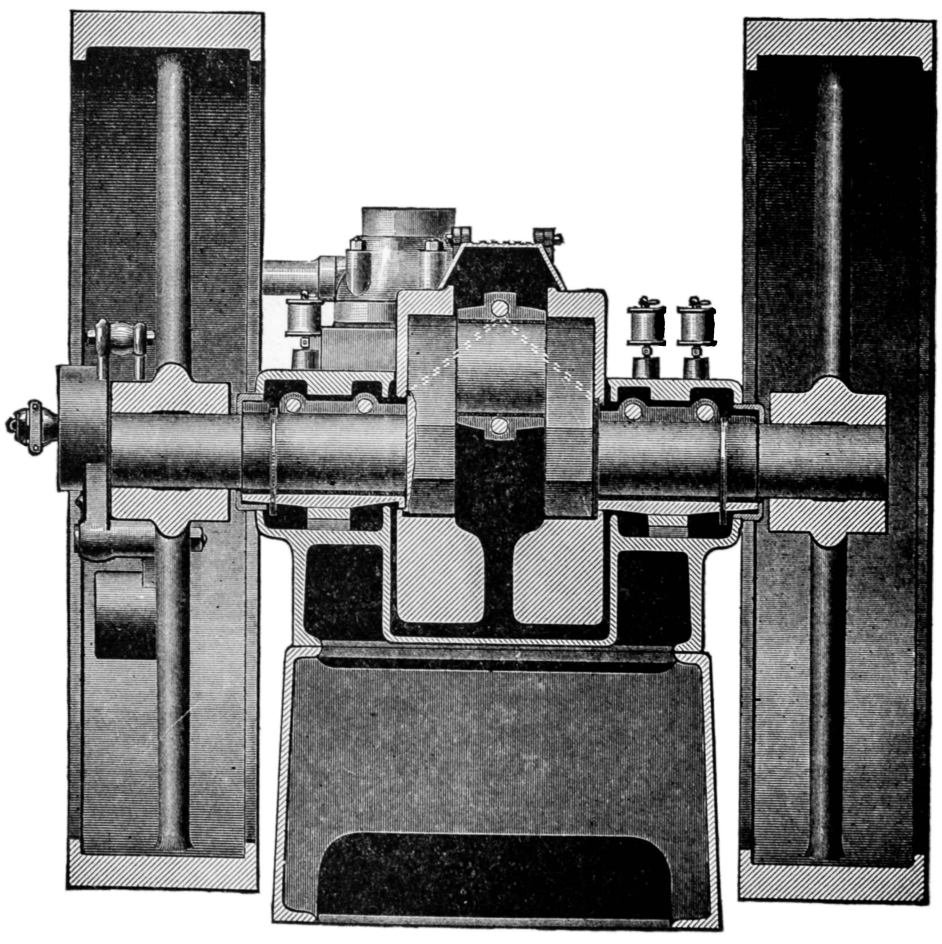

Fig. 3088*a*.

and also through cavity d'' in relief plate into port a', as shown by the arrows. Steam is at the same time entering supplemental port a at opposite end at two points, and travelling through the horizontal passages into port a' and cylinder port H'. The admission, therefore, takes place at *four points at the same time*, and as the ports are very large, the nearest approach to boiler pressure is reached, and the usual loss between boiler and cylinder greatly reduced. The initial pressure is well maintained up to the point of cut-off, even under the heaviest loads, and the cut-off takes place promptly, the closure, of course, being made at four points simultaneously, the same as the opening.

A double exhaust is also used, as shown in Fig. 3089, the valve being provided with supplemental exhaust ports c c'. In the position of valve shown, the exhaust steam passes from cylinder port H into cylinder exhaust passage I in the usual way, and, in addition, is passing through supplemental port c into central cavity K of valve, and thence into passage I, as indicated by the arrows. This provision furnishes a very large area of opening for exit of the exhaust steam, and as the opening also takes place very rapidly, the pressure drops promptly at release and is maintained at or close to that of the atmosphere, even under the heaviest loads, until the exhaust ports close for compression. The plate e, forming part of the valve on the relief-plate side, is for the purpose of a shield to prevent the exhaust steam impinging upon

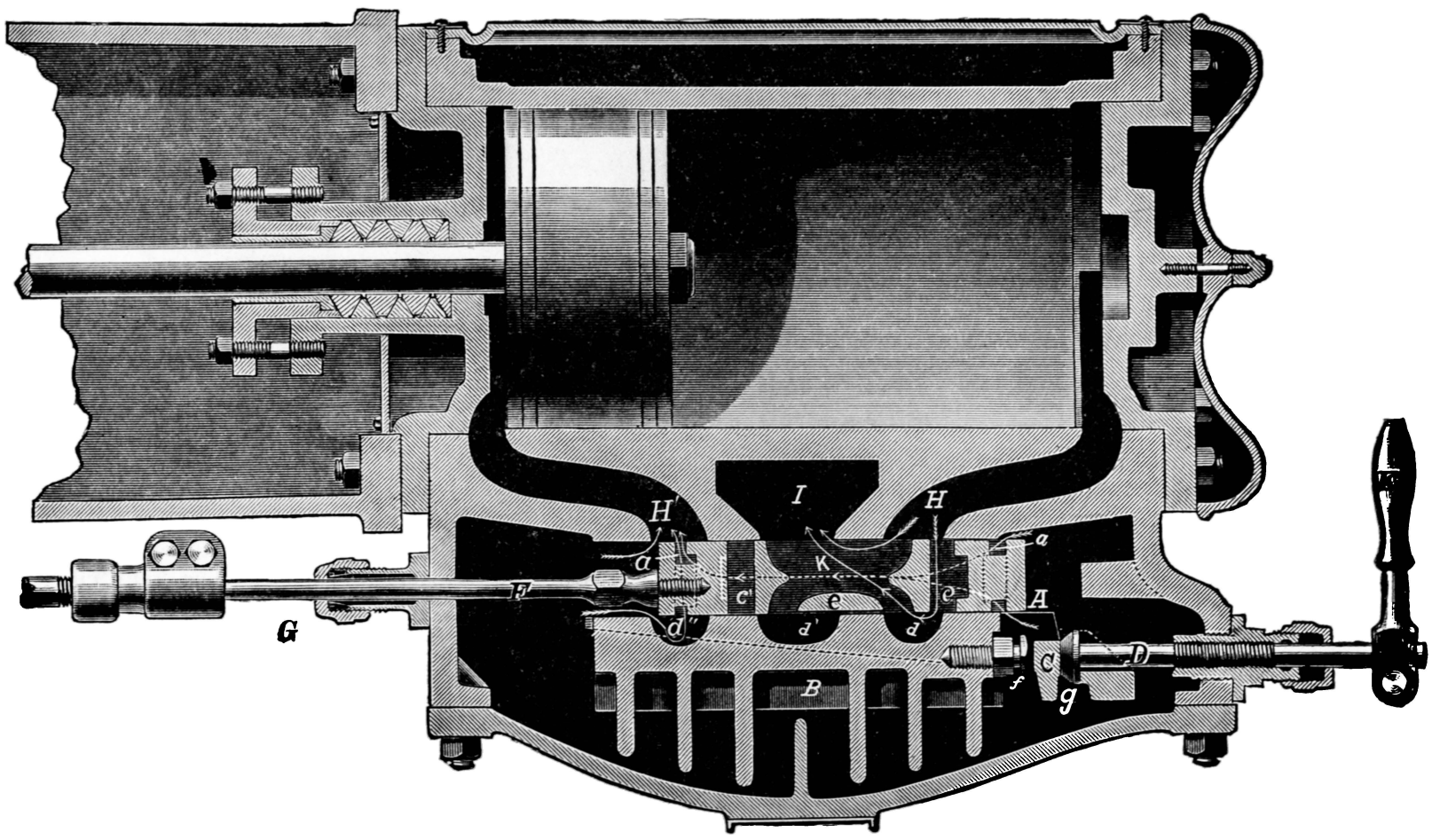

Fig. 3089.

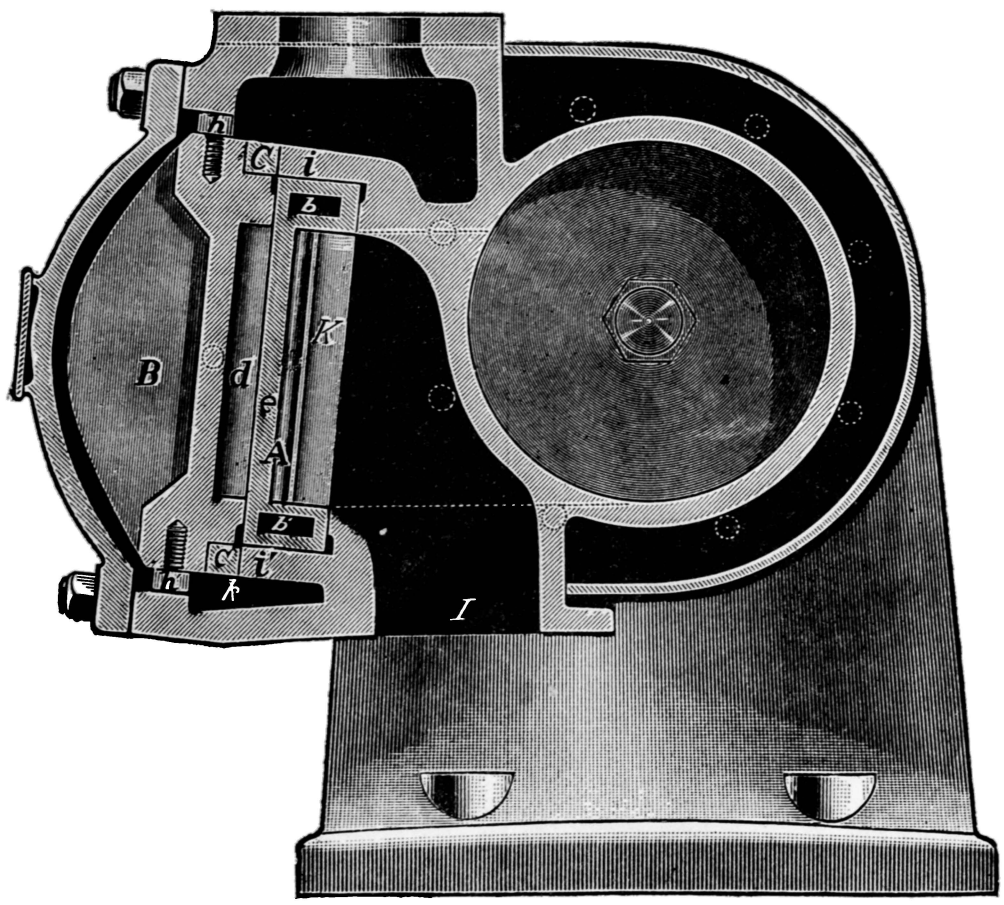

Fig. 3090.

the face of the relief plate, and wearing it by attrition so as to cause leakage. This shield does not in any way interfere with free exit of the exhaust, but, on the contrary, assists in guiding it towards exhaust passage I.

The stuffing box G is bolted to the steam chest on a surface

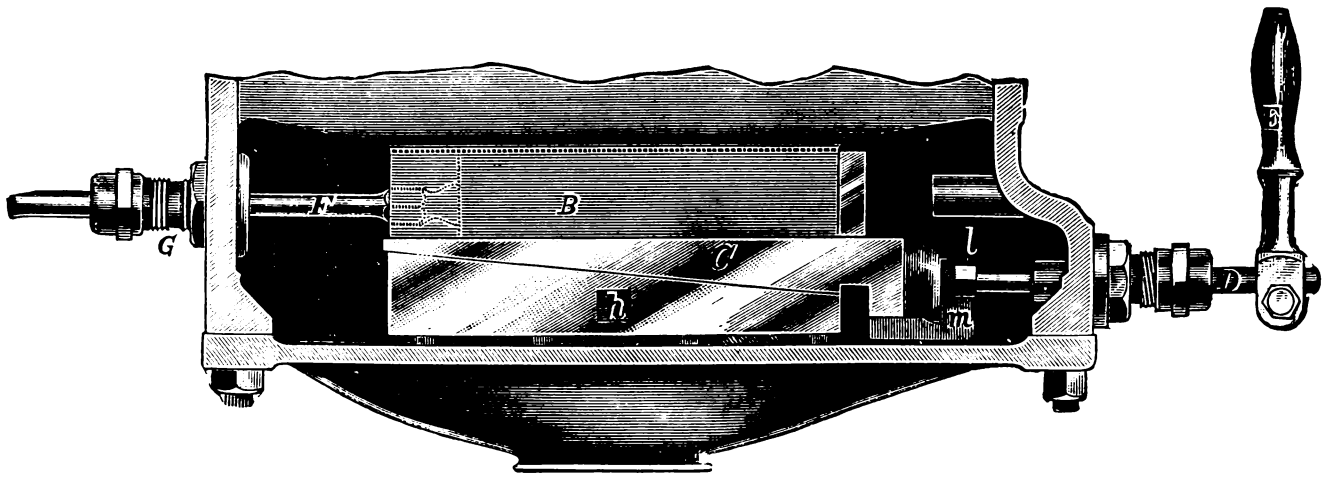

Fig. 3091.

that is scraped steam tight. The stud holes are somewhat larger than the studs, and the stuffing box is, therefore, adjustable both vertically and laterally. This permits a rigid connection of valve rod to valve that will not wear loose or shackly.

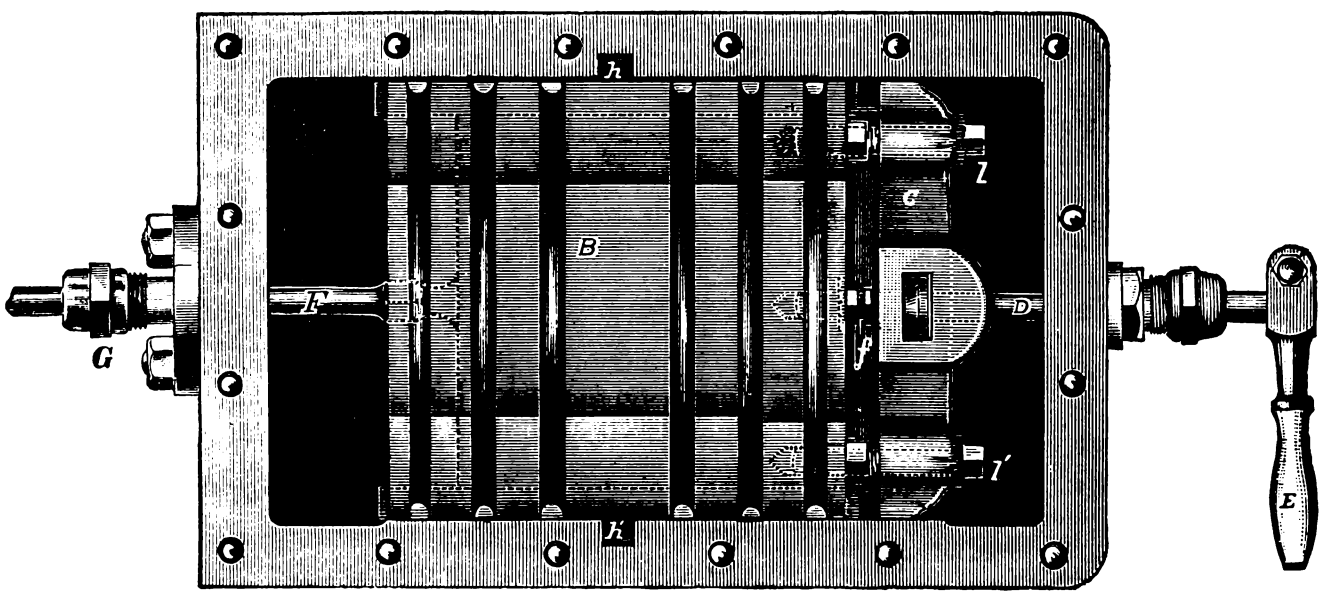

Fig. 3092.

Fig. 3096 is a side elevation of the governor, and Fig. 3097 an enlarged view of the spring head, showing the knife-edge bearing.

The weight A is bolted to the eccentric arm, and is, therefore, pivoted to flywheel at B, the same point as the eccentric itself. The weight A' is adjustable on the lever D, which is pivoted to

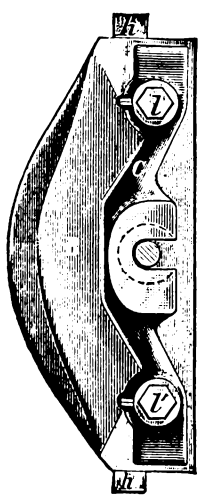

Fig. 3093.

flywheel at B', and connected to eccentric C through the link E. Rubber buffers (not shown) at point *a* and point *b* form stops for the extreme inward position of the weights, and the one at *c* for the extreme outward position.

In the position shown the weights are at their extreme inward point of movement, the centre of eccentric being at *d* and corresponding to point of cut-off by the valve at ¾ stroke. In the extreme outward position of weights the centre of eccentric is moved to *e*, where the eccentric gives to the valve its least travel, the point of closure or cut-off being at zero.

The spring F is pivoted to eccentric at G upon a knife-edge bearing, shown in detail in Fig. 3097. The spring head *h* is a forging screwed into the spring, and the support for knife edge is made separately and inserted in place. The knife edge itself is inserted in the pin *i*, which is securely fastened to the eccentric. The knife edge and its support are made of hardened tool steel, so that both wear and friction are entirely eliminated from this important pivot, which receives greater pressure than any of the others. It, of course, requires no oiling.

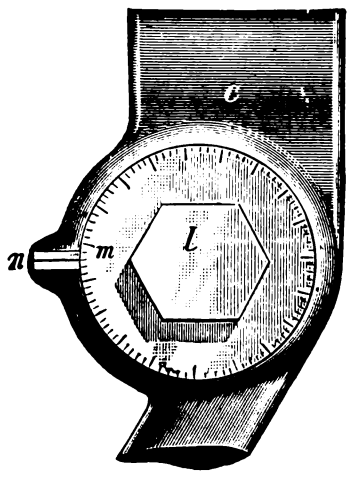

Fig. 3094.

The outer end of spring is secured to the wheel in such a manner as to permit of a lateral adjustment of the former along the rim of the wheel, allowing the spring to be swung around on its pivot G to a point nearer to or farther from the main pin B, and forming thereby a more or less acute angle with a line drawn

from its point of support G to B. The bolts *k k'* screw into the rim and pass through slotted holes in the slide *f*, which permit of the necessary amount of movement of the slide and spring. The effect of this arrangement is to make the governor more or less sensitive as desired.

It is seen in Fig. 3096, that as the outer end of the spring is

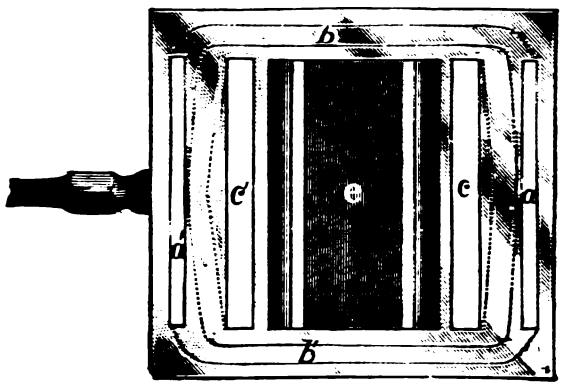

Fig. 3095.

moved upward from the position shown, thus bringing it nearer to the pin B, its effective force or leverage is lessened, and an adjustment in the opposite direction has the reverse effect. In adjusting the position of the spring, after giving it sufficient tension, which is obtained by the screw at the outer end, if there is too much difference in speed under varying loads and pressures, the slide *f* is moved to carry the spring towards the eccentric pivot B. Just inside the racing point is the proper place to fix the adjustment.

In Fig. 3096, as will be noticed by the cut, provision is made for changing the weights so as to run the engine in the opposite direction, if desired.

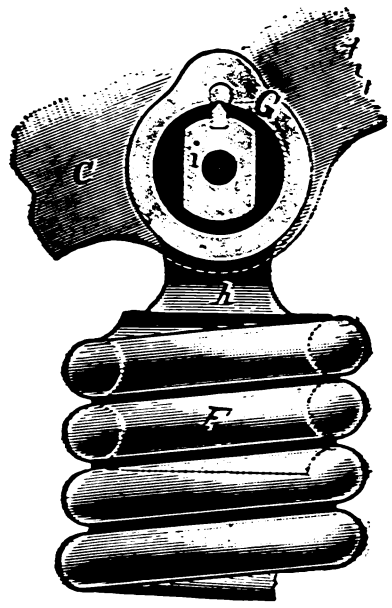

Fig. 3097.

Fig. 3098 shows the method of attaching the counterweighted disks to the cranks, for the purpose of balancing the reciprocating parts, the left-hand figure being an elevation of the disk with the shaft in cross section, and the right-hand one a view of the side of one crank with the disk in vertical section.

The shaft A and pin B are formed with the cranks in one solid steel forging. The counterbalancing disk C, the outside of which

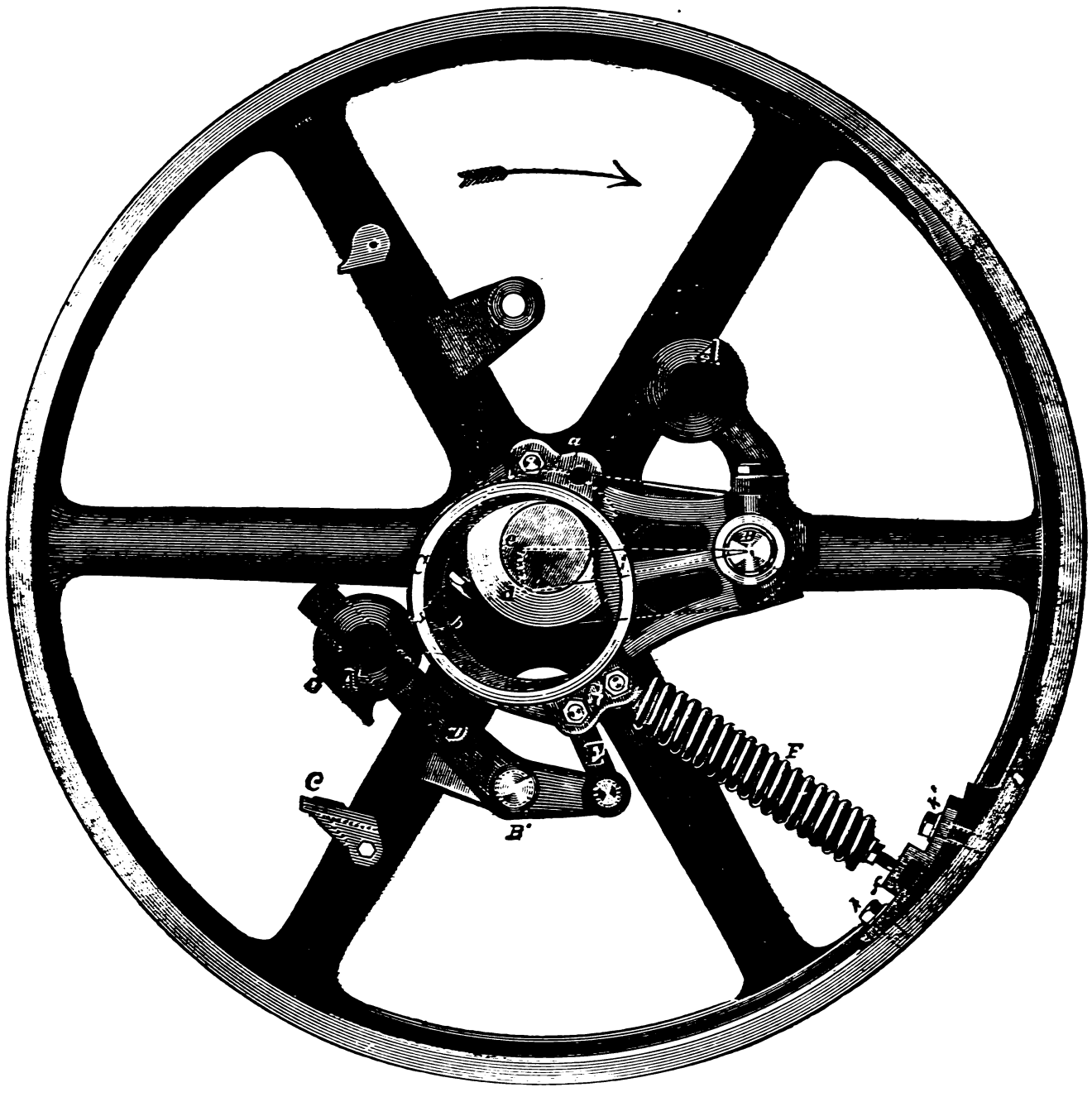

Fig. 3096.

is concentric with the shaft, is secured to the crank by a wrought-iron clip D, which passes around the end of the crank, extending through the disk and having threaded ends for the nuts, which, when tightened, seat the disk and shaft firmly together. The crank is turned off at *a a'* for a short distance on each side, concentric with the shaft, and the disk bored to correspond, which forms a true and permanent seat. The central space or recess *b* cored in the disk is filled with soft metal which fits closely against the shoulders in crank formed at the ends of the turning, establishing the permanent longitudinal position of the disc.

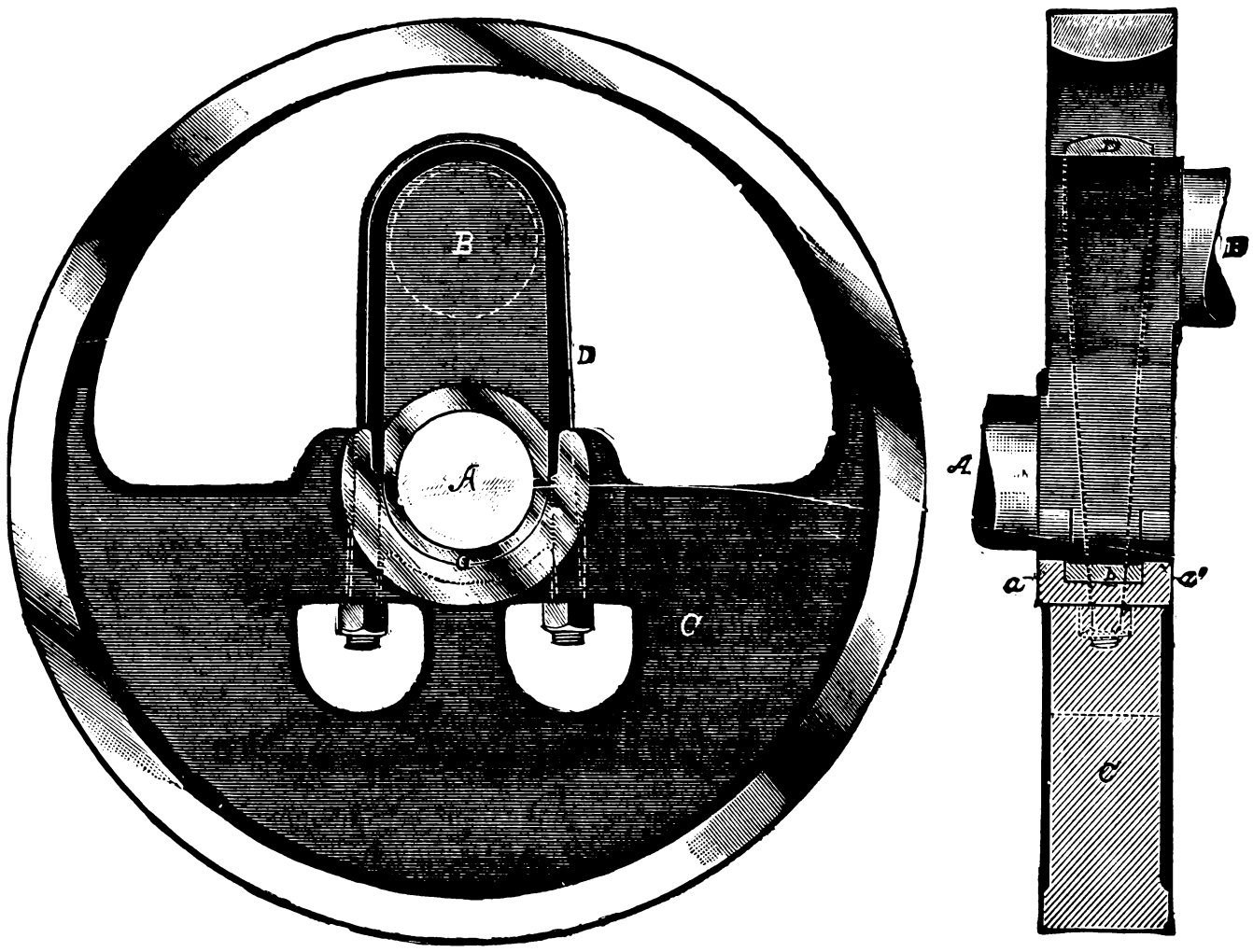

Fig. 3098.

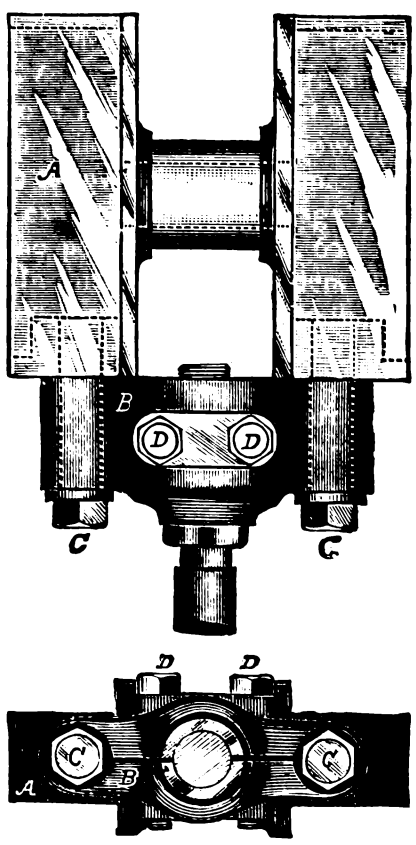

Fig. 3099.

By this construction there is secured the advantge of a removable disk, which is a feature greatly appreciated if at any time it is desired to true up the crankpin. The disks can be readily removed after unscrewing the clip nuts, and the pin can then be trued up in a lathe. The disks are not only removable, but when replaced they return to precisely their original positions in every direction and will run true with the shaft.

The upper view in Fig. 3099 shows the top of crosshead, and the lower one is an end view, the piston rod being in section. The body A of crosshead is made hollow for lightness, and the hub B is secured to same by the two bolts C, which tap into the crosshead. The holes in the hub are made somewhat larger than the bolts, and after the alignment of piston rod is made and the bolts screwed up in place, the space around each bolt is filled with lead or other soft metal. The hub, which is very long where the piston rod passes through, is threaded for one-half of its length, for the rod. It is split horizontally between the bolts C, as shown in the lower view, and the two bolts D clamp it firmly to the rod. The pin is flattened at the top and bottom and the boxes cut away to correspond. The advantages of the separable crosshead are threefold. *First:* It allows the pin to be turned in an ordinary lathe, thus securing true surfaces when new and enabling the pin to be re-turned if it ever becomes necessary. *Second:* The alignment of piston rod in construction is simplified and greater accuracy insured, as the hub is adjustable in each direction before the spaces around bolts are filled, instead of occupying an arbitrary position. *Third:* It enables the vertical adjustment of piston rod to be made should the wear of piston or crosshead in course of time appreciably alter their relative vertical positions. While the proportions of wearing surfaces are such that ordinarily the downward wear of piston and crosshead are about equal, conditions may arise whereby the crosshead will wear faster than the piston, and *vice versa;* should either of these occur, the adjustment can be made by taking out the bolts C, removing the soft metal and making the proper re-alignment, and pouring soft metal again around the bolts after they are screwed up in place.

The clearance between piston and cylinder head is kept practically equal at each end by turning the piston rod in crosshead one revolution at a time, when the wear of the connecting-rod boxes requires it. The operation of loosening the clamp bolts, turning the rod, and tightening the bolts again, is a very simple one, and the adjustment can be quickly made.

SETTING ENGINE VALVES.—In setting the valves of steam

engines there are two separate and distinct operations. One of which is to place the crank or crankpin exactly on its dead centre, first at the end of one, and then at the end of the other stroke, and provide means to be able to test the correctness of its position as often as may be required in setting the valve; and the other is to get the eccentric rod to its proper length and set the eccentric in its position to give the amount of valve lead required.

The parts being put together and the link in full gear, we place the crankpin or crank on the dead centre by the process illustrated in Fig. 3100, in which the piston is shown at the head end of the cylinder and the crank on its corresponding dead centre.

The first thing to do (if the engine has a link motion) is to put the reversing gear in full gear forward, so as to set the forward eccentric, and see if its rod is of proper length.

The next thing to do is to move the wheel so that the crankpin is nearly on the dead centre, and then take a tram (such as shown in the figure), pointed at each end, and mark on the splash plate, or any other convenient place, a centre-punch dot in which the point *b* of the tram can rest. Next, from the centre of the axle as a centre, mark arcs or portions of circles *a a*. This being done, point *b* of the tram is rested in the centre-punch dot before referred to, and with the other end a line *c* is marked. A straight edge is then rested against the ends *e e* of the crosshead, and a line *d* is marked on the guide bar, this line being exactly even or fair with the end *e e* of the crosshead.

We then move the wheel in the direction of the arrow, and as soon as we begin to do so, the crosshead will move to the left and away from the line *d* on the guide bar. But as soon as the crankpin has passed its dead centre, the crosshead will begin to move to the right, and as soon as the end *e e* comes again exactly in line with the line *d* marked on the guide bar, we must stop moving the wheel, and again resting the point *b* of the tram in the centre-punch mark before mentioned, we move its other end so as to mark a second line, which will be the line or arc *f*.

The next thing to do is to mark a fine centre-punch dot where *c* and *f* cross the arc or line *a*, and then find the point *g* midway between *f* and *c*, and mark a fine centre-punch mark there. This being done, we must move the wheel back into the position it occupies in the figure, and then slowly move it in the direction of the arrow, until, with the end *b* of the tram resting in the centre-punch dot, the other end of the tram will fall dead into the centre-punch dot at *g*, at which time the crankpin will be exactly on the dead centre.

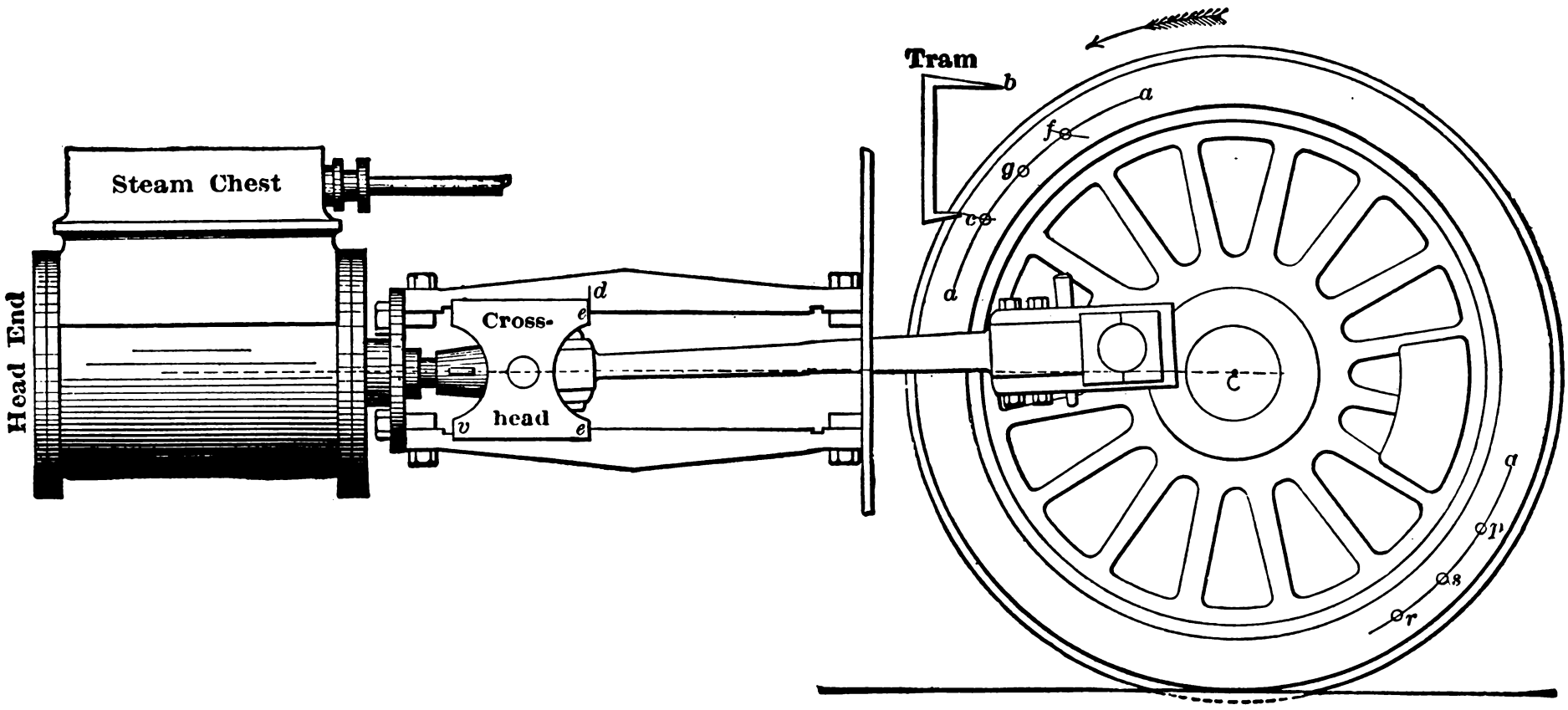

Fig. 3100.

During this part of the process we have nothing to do with any thing except getting the crankpin on the dead centre, but there is one point that requires further explanation, as follows:

In this operation we have first put the crank on one side and then put it to the same amount on the other side of the dead centre, both being improper positions; but by finding the mean or mid position between the two, we have found the proper position. In doing so, however, we have moved the wheel, the wheel has moved the connecting rod, and the connecting rod has moved the piston. But in the actual running of the engine, this order of things will be reversed; for the steam will move the piston, the piston will move the connecting rod, and the connecting rod will move the crank and, therefore, the wheel.

The difference between the two operations is this: Suppose there is lost motion or play between the connecting-rod brasses and the crankpin, or between the connecting-rod brasses and the crosshead pin, and then if we move the wheel in the direction denoted by the arrow, we take up this lost motion, so that if the tram was fair with the centre punch at *g*, and steam was admitted to the piston, then there would be no lost motion to take up, and as soon as the piston moved, the crankpin would move. But if we moved the wheel in the opposite direction to that denoted by the arrow, then we are placing any lost motion there may be in the opposite direction, and if steam were turned on, the piston and connecting rod might move before the crank and wheel moved.

In which direction the wheel should be moved while placing the crank on the dead centre depends upon the condition of the engine, as will be explained presently, the assumption being at present that the engine is in thorough good order, in which case the wheel should (while placing the crank on the dead centre) be moved in the direction in which the engine is to run, as denoted by the arrow in the figure.

The object is under all conditions to bring the working surfaces to bear (while setting the valve) in the same way as they will bear when the engine is actually at work.

Having placed the crank on the dead centre, and thus completed the first operation in valve setting, we may turn our attention to the second, viz.: correcting the lengths of the eccentric rods and setting the valve lead.

Almost all writers who have dealt with this part of the subject have fallen into a very serious error, inasmuch as they began the operation by what they call *squaring* the valve.

This means so adjusting the length of the eccentric rod that the

valve will travel an equal distance each way from its mid position, so that if the engine wheel is revolved and the extreme positions of the valve marked by a line, these lines will measure equally from the edges of the steam ports; or, what is the same thing, from the centre of the cylinder exhaust port. This procedure is entirely erroneous, because, on account of the angularity of the eccentric rod, the valve cannot, if equal lead is to be given, travel equally beyond the two steam ports, and if the eccentric rods are so adjusted for length as to *square the valve*, they are made wrong.

The valve lead, and the lead only, it is that determines the length of the eccentric rods. Suppose that, as is generally the case, the lead is to be equal; or, in other words, that there is to be as much valve lead when the piston is at one end of the cylinder as there is when it is at the other, and if we make the eccentric rods of such a length that the valve travels equally on each side of the steam port, there will be less lead at the head-end port than there is at the crank-end port. The proper method, therefore, is (as soon as the crank is on the dead centre and the link in full gear, as in Fig. 3101) to set the eccentric so as to give the desired amount of lead, and then give the wheel a half revolution, the lower end of the tram falling into the centre-punch dot at *s*, when the crankpin will be on its other dead centre and ready for the lead to be measured again. If the lead is equal at each end, one eccentric rod is of the right length, and all we have to do is to set the eccentric so that the right amount of lead is given.

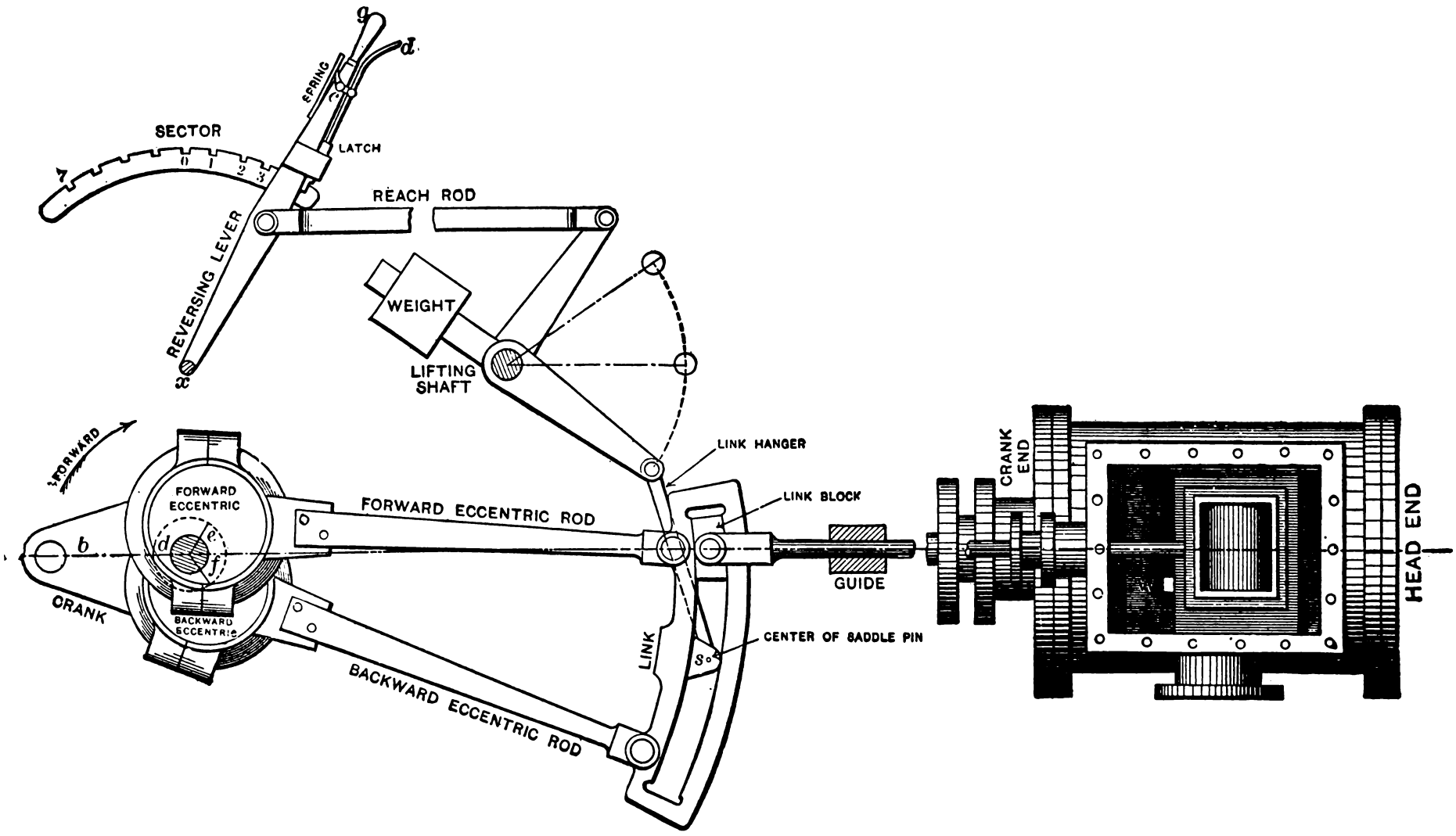

Fig. 3101.

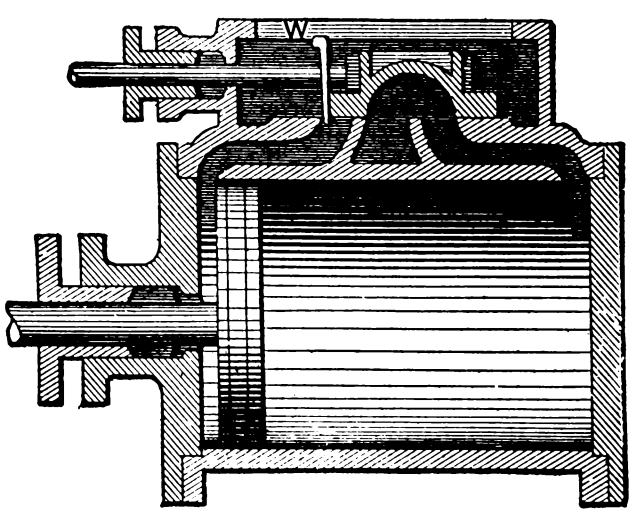

Fig. 3102.

We now turn our attention to the backward eccentric and its rod, putting the reversing lever in full gear for the backward motion, and putting the crank on the respective dead centres, and testing the lead for both ports as before, and when the required amount of valve lead is given the valve setting is complete.

In some locomotive practice the wheel is blocked up on the pedestal guides while setting the valves, but a more correct method is to let the engine rest on the rails and push it back and forth with a crowbar to revolve the wheels when putting the crankpin on the dead centre. The best thing to measure the lead with is a wooden or leaden wedge having but a slight degree of taper,

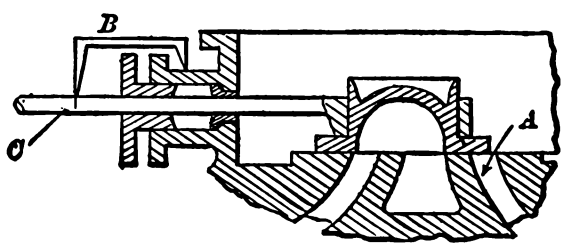

Fig. 3103.

as say $\frac{3}{16}$ or $\frac{1}{4}$ inch in a length of four inches, applying it as in Fig. 3102, at W.

We have, in this example of valve setting, supposed the parts to be of the proper dimensions, as they would be in a new engine or in an engine that had been running and merely had a new valve or a new eccentric put in.

But suppose the notches were not cut in the sector, or quadrant, and we have then to mark them off while setting the valves. All the difference that this makes to the operation is that we must clamp the reversing lever to the sector while setting the valve, taking care to so clamp it that there is the same space between

the top end of the link block and the end of the link slot in the full forward gear as there is between the bottom end of the link block and the end of the link slot when the engine is in full backward gear.

In this connection it is, however, to be remarked that when the

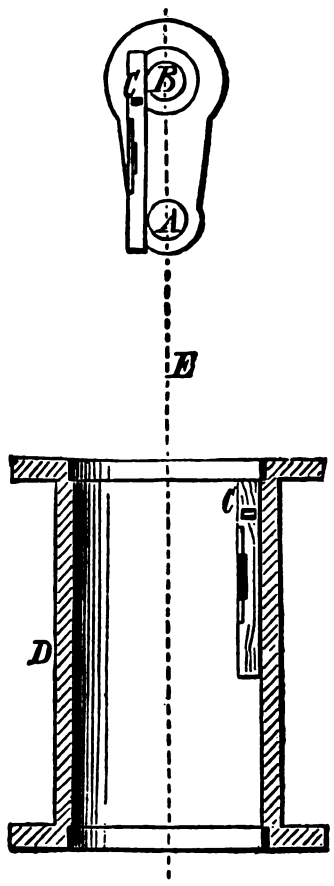

Fig. 3104.

link is in full gear, either forward or backward, and the crank is on the dead centre, the link block is not at the end of its motion toward the end of the link slot ; hence it is a good plan to move the wheels around and to so regulate the length of the reach rod and the position of the reversing lever on the sector, that when the link block is at the highest point in the link slot for the forward gear, and at the lowest point in the link slot for the backward gear, it comes an equal distance from the end of the link slot.

In some practice, the position of the valve is transferred to the valve stem outside of the stuffing box or gland, as shown in Fig. 3103, sectional view. The valve stem being disconnected from the rod or arm that drives it, the valve is moved by hand to have the proper lead, as at A ; a centre-punch mark is then made outside the stuffing box and a tram B rested thereon ; with the other end of the tram a mark C is made on the valve stem. A similar mark is made on the stem when the crank is on the other dead centre, and the tram and marks, applied as shown, are employed instead of measuring the lead at the ports themselves. This involves extra work, and gives no more correct results. It involves marking lines on the valve stem, which is objectionable. If several trials have to be made there is a confusion of lines on the valve stem, and the wrong one is apt to be taken. On the other hand, it affords a facility for setting the valve without having the steam chest open, which may, in some cases, be desirable.

When the eccentrics are secured to the shaft by a set screw only, and not by a feather, it is an excellent plan, after they are finally set, to mark their positions on the shaft, so that if they should move they may be set to these marks without moving the engine around.

For this purpose take a chisel with the cutting end ground to the form of a fiddle drill, one cutting edge being at a right angle to the other. The chisel must be held so that while one edge rests upon the axle, the other edge will bear against the radial face of the eccentric. A sharp blow with a hammer upon the chisel head will make a clean indented cut upon the axle and the eccentric, the two cuts meeting exactly in a point where the eccentric bore meets the axle circumference, so that when they coincide the eccentric is in its proper position.

If the eccentrics of a locomotive should slip when the engine is upon the road, and there are no marks whereby to readjust them, it may be done approximately as follows : Put the reverse lever in the end notch of the forward gear ; then place the crank as nearly on a dead centre as the eye will direct, and open both the cylinder cocks ; then disconnect the slide valve spindle from the rocker arm, and move the valve spindle until the opening of the port corresponding to the dead centre on which the crank stands will be shown by steam blowing through the cylinder cock, the throttle valve being opened a trifle. The position of the valve being thus determined, the eccentric must be moved upon the shaft until the valve spindle will connect with the rocker arm, without the latter being moved at all. The throttle valve should be very slightly

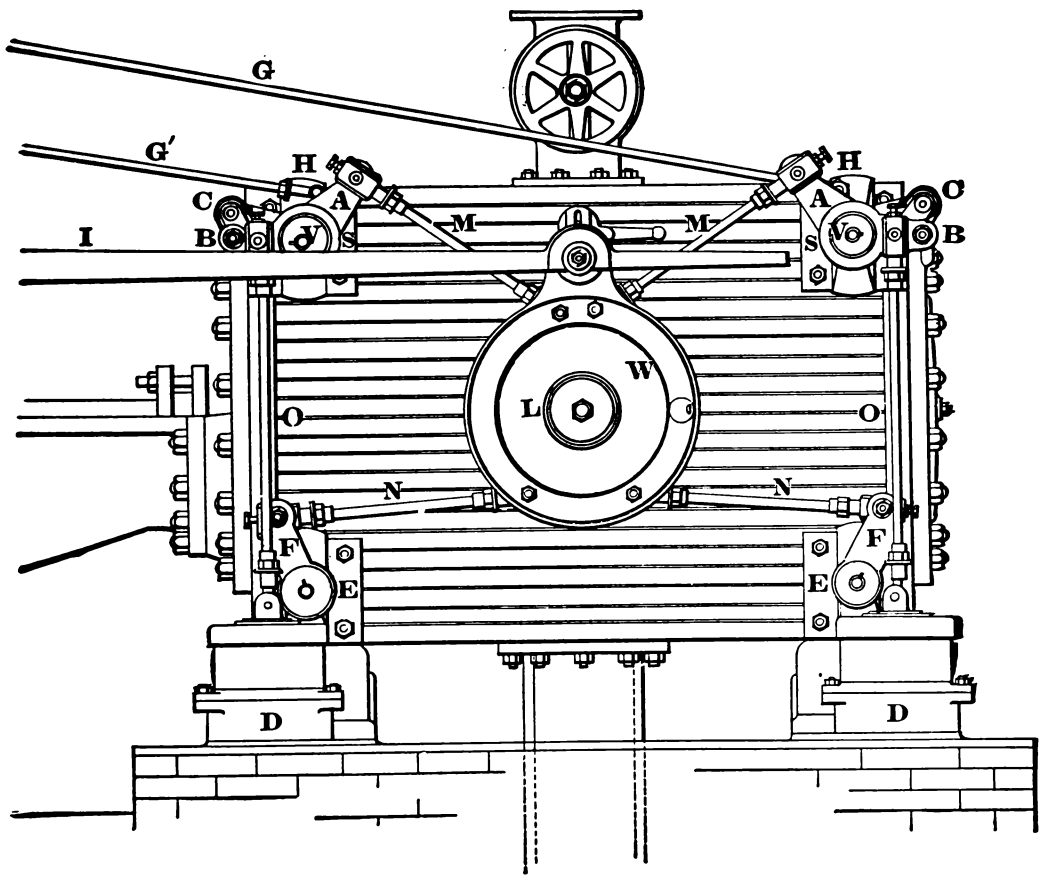

Fig. 3105.

opened; otherwise so much steam will be admitted into the cylinder that it will pass through any leak in the piston and blow through both cylinder cocks before there is time to ascertain which cock first gives exit to the steam.

Instead of finding when the crankpin is on the dead centre by means of the process shown in Fig. 3100, it may be found as in Fig. 3104, which is for a vertical engine. On the face of the crank and from the centre of the crankshaft as a centre, draw a circle B equal in diameter to the diameter of the crankpin. Then take a spirit-level C and apply it to the cylinder bore, and note where its bubble stands. Then apply the spirit-level to the perimeter of the crankpin A and circle B, and move the crank until the spirit-level bubble stands in the same position as it occupies when applied to the cylinder bore. If the cylinder bore stands truly vertical the bubble will, in both cases, stand in the middle of the spirit tube; but in any event, the bubble must stand in the same position when applied to the crank as when applied to the cylinder bore, in which case the crank will be on its dead centre whether the cylinder bore be horizontal, vertical, or at an angle, the dotted line E passing through the centre of the crank and the axis of the cylinder bore.

When an engine has two eccentrics, so as to enable the engine to run in either direction, as in the case of a locomotive, it is necessary to consider which eccentric is to be set for the forward, and which for the backward motion. In American locomotive practice it is usual to let the eccentric nearest to the wheel, and, therefore, the most difficult to get at, be for the backward motion,

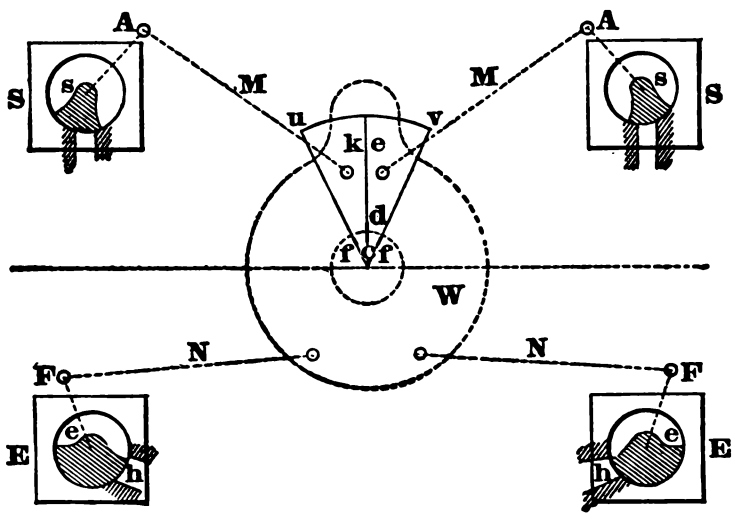

Fig. 3106.

which is the least used, and therefore the least liable to get loose upon the axle.

The eccentric that connects to the top of the link is usually that for the forward motion, and hence that which connects with the eccentric farthest from the wheel.

In testing the lengths of the eccentric rods, work may be saved, after the engine is first placed on its dead centre, by putting the reverse lever in the forward notch of the link, and adjusting the forward eccentric until the valve has the proper lead. Then set the reverse lever in the back notch and move the backing eccentric (in both cases moving them in the direction in which they will run) until the proper amount of lead appears. The engine may then be placed on the other dead centre, and the lead both for forward and backward gear measured, so that if there are any errors, both the rods may be corrected for length; but for the final trial the crankpin must be set on its dead centre for each direction of motion separately, so as to take up any lost motion in the connecting-rod brasses.

SETTING CORLISS VALVES.*—A brief description of the essential parts of this valve gear will assist in obtaining a clearer conception of the subject. In Figs. 3105 and 3106, similar capital letters of reference indicate the same parts of the mechanism.

Fig. 3105 shows all the essential parts of the valve gear. The steam valves work in the chambers S S, and the exhaust valves work in the chambers E E. The bell-crank levers A C, A C, work loosely on the hubs of the valve-stem brackets and the lever arms B B. The former are connected to the wrist plate W by the rods M M. The levers B B are keyed to the valve stems V V, and are also connected by the rods O O to the dashpots D D. The bell-crank levers carry at their outer ends C C hardened steel catch plates, which engage with arms B B, making the two arms B and C work in unison until steam is to be cut off. At this point another set of levers, H H, connected by the cam rods G G to the governor, come into play, causing the catch plates to release the arms B B, the outer ends of which are then pulled downwards by

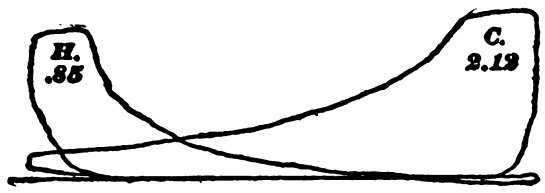

Fig. 3107.

the weight of the dashpot plunger, causing the steam valves to rotate on their axes and thus cut off steam. These are the essential features of the Corliss gear, although the design of the mechanism is greatly modified by different builders.

The exhaust valve arms F are connected to the wrist plate by the rods N N, and it is seen that all the valves receive their motion from the wrist plate; the latter receives its motion from the hook rod I; this rod is generally attached to a rocker arm, not shown. To this arm the eccentric rod is also attached. The carrier arm is usually placed about midway between the wrist plate and eccentric, and in the centre of its travel stands in a vertical position.

The setting of the valves is not a difficult matter when, on the wrist plate, its support, valves, and cylinder, the customary marks have been placed for finding the relative positions of wrist plate and valves.

Now, referring to Fig. 3106, when the back bonnets of the valve chambers have been taken off, there will be found a mark or line on the end of each steam valve *s s*, coinciding with the working or opening edge of each port; another line will be found on each face of the steam-valve chamber coinciding with the working edge of the steam valve. The exhaust valves and their chambers are marked in a similar way; *i.e.*, the line on the end of each exhaust valve coincides with the working edge of the exhaust port.

On the hub of the wrist plate will be found a line *d* coinciding with the centre line *d k*; lastly, there are three lines, *f*, *c*, *f* on the hub of the wrist-plate support, placed in such a way that when the line *d* coincides with the line *c*, the wrist plate will stand exactly in the centre of its motion, and when the line *d* coincides with either of the lines *f f*, the wrist plate will be at one of the extreme ends *u* or *v* of its travel. It should be noticed that since the lines *f*, *c*, *f* are drawn on the periphery of the hub of the wrist-plate support, and the line *d* is drawn on the periphery of the wrist-plate hub, these lines cannot stand in a vertical position, as shown.

Fig. 3108.

We have adopted this way of showing them simply for the purpose of making the matter plain.

In setting the valves, the first step will be to set the wrist plate in its central position, so that the lines *c* and *d* will coincide, and fasten the wrist plate in this position by placing a piece of paper between it and the washer L on its supporting pin. Now set the steam valves so that they will have a slight amount of lap; that is to say, the valve lines must have moved a little beyond the port edges; the amount of this lap depends much on individual preference and experience. It ranges from $\frac{1}{16}$ to $\frac{1}{4}$ inch for small engines,

* *American Machinist*, May 16, 1895.

and from $\frac{1}{4}$ to $\frac{9}{16}$ inch for comparatively large engines. This lap is obtained by lengthening or shortening the rods M M by means of the adjusting nuts.

Now place the exhaust valves *e e*, by lengthening or shortening the rods N N by means of the adjusting nuts, in a position so that the working edges will just open the exhaust ports; or, in other words, place the lines on the valves, to exactly correspond to the port edges. Some engineers prefer a slight amount of lap; others prefer a slight opening of the exhaust ports when the valves are placed in this position. Under these conditions the valve lines cannot exactly correspond to the respective port edges. The lack of correspondence will, of course, be equal to the desired amount of opening; for small engines it is about $\frac{1}{16}$ inch, and for larger engines may be increased to $\frac{3}{16}$ inch, but in any case the

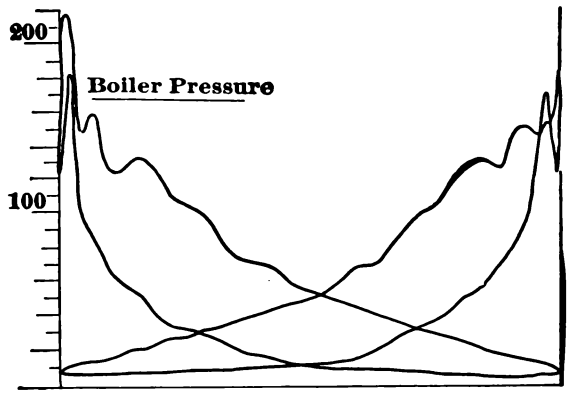

Fig. 3109.

amount of this opening should be less than the lap of the steam valves, otherwise there will be danger of blowing through.

The paper between the wrist plate and the washer on the supporting pin should now be taken out, so that the wrist plate connected to the valves can be swung on its pin.

The next step will be to pay some attention to the rocker arm. Set this arm in a vertical position by means of a plumb-line, and connect the eccentric rod to it; then turn the eccentric around on the shaft, and see that the extreme points of travel are at equal distances from the plumb-line. To secure this, a little adjustment in the stub end of the eccentric rod may be necessary. Now connect the hook rod I to its pin on the wrist plate, and again turn the eccentric around on the shaft, and thus determine the extreme

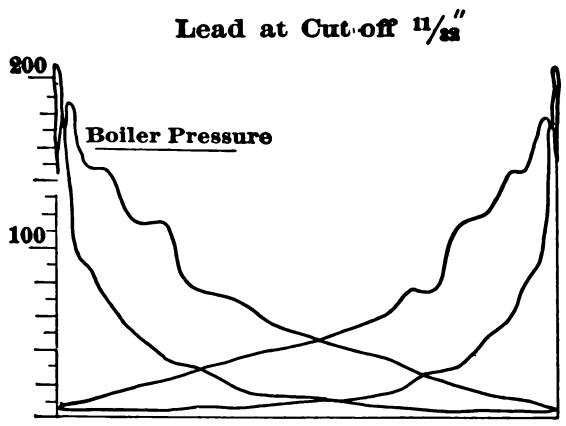

Fig. 3110.

points of travel of the wrist plate. If all parts have been correctly adjusted, the line *d* will coincide with the lines *f f* at the extreme points of travel; if this is not the case, the hook rod will have to be adjusted at its stub end so as to obtain the desired equalized motion of the wrist plate.

The next step will be to set the valves correctly with the position of the crank. To do so the lengths of the rods M M N and N must not be changed, but the following mode of procedure should be followed: Place the crank on one of its dead centres, and turn the eccentric loosely on the shaft in the direction in which the engine is to run, until the steam valve nearest to the piston shows an opening or lead of $\frac{1}{32}$ to $\frac{1}{8}$ inch, according to size of engine, the smaller lead, of course, being adopted for small engines. After the proper lead has been given to this valve, secure the eccentric, and turn the shaft with eccentric in the same direction in which the engine is to run until the crank is on the opposite dead centre, and notice if the opening or lead at this end of the cylinder is the same as on the other steam valve; if not, shorten or lengthen slightly, as may appear necessary, the connection between wrist plate and eccentric. Of course, much adjustment in the length of these connections is not admissible without resetting the valves with reference to the wrist plate.

The only thing which remains now to be done is to adjust the cam rods G G′. To do so, secure the governor balls in their highest position, and disconnect the hook rod from wrist pin; lengthen or shorten the cam rods G G′, so as to bring the detachment apparatus into action; swing the wrist plate back and forth, and make such adjustment in the rods G G′ as to permit the steam valves to be released when the steam port has been opened about $\frac{1}{8}$ inch. This adjustment is for the purpose of keeping the engine under the control of the governor, in case, for some reason or another, the load on the engine is suddenly thrown off. After this adjustment, the governor balls should be placed in their lowest position, in which the releasing gear should not detach the steam valves, but allow the steam to follow nearly full stroke. Sometimes the releasing gear is constructed in such a manner as to close the steam valves automatically, in case the belt leading to the governor should be broken, or the load on the engine suddenly thrown off. In cases of this kind the governor balls need not be placed in their highest position, but should be placed in their lowest position, and the wrist plate moved to either end of its extreme travel; the steam port opposite this end of travel of wrist plate will then be wide open. Now adjust the corresponding cam

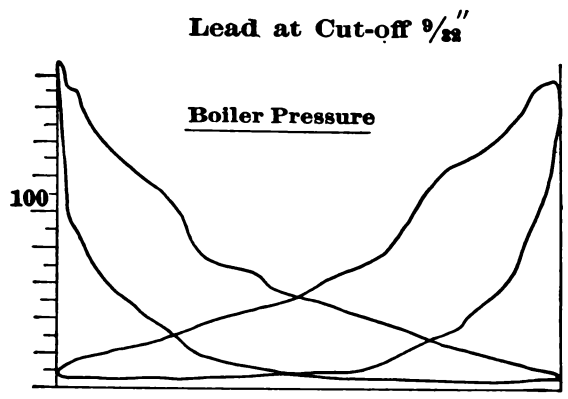

Fig. 3111.

rod so that the releasing gear is nearly on the point of releasing the valve; then move the wrist plate to the other end of its extreme travel, and adjust the other cam rod in the same manner. To prove the correctness of the cut-off adjustment, raise the governor balls to about the position where they would be when at work, or to a medium height, and block them there; then, with the connections made between the eccentric and the wrist plate, turn the engine shaft slowly in the direction in which it is to run, and when the valve is released, measure upon the slide the distance through which the crosshead has moved from its extreme position.

Continue to turn the shaft in the same direction, and when the other valve is released, measure the distance through which the crosshead has moved from its extreme position, and if the cut-off is equalized, these two distances will be equal to each other. If they are not, adjust the length of the cam rods until the points of cut-off are at equal distances from the beginning of the stroke. Replace the back bonnets and see that all connections have been properly made, which will complete the setting of the valves. Wherever convenient, it is desirable that an indicator be applied to the engine when at work, and the setting of the valves tested. If necessary, they should be readjusted for the best possible condition for economical work.

When the valves are set and the engine started, it is as well, if there is the requisite indicator and rig at hand, to take indicator cards from each end of the cylinder to see that the setting is correct.

It may sometimes happen that the setting of the valves of an old engine is to be examined, as, for example, by reason of an uneven

beat in the exhaust, the cause of which may be discovered from indicator cards.

Fig. 3107 is an example of this; the point of cut-off for the head end H being very much earlier than that for the crank end C, and the card areas being .85 at the head end and 2.12 for the crank end; whereas, from the angularity of the engine connecting rod, the exact reverse should be the case, as has already been fully explained. To equalize the points of cut-off and the card areas, the lengths of the rods GG', that connect the tripping cams to the governor, must be adjusted; that for the head end to throw the trip cam back, and that for the crank end to put the trip cam forward.

Fig. 3108 is a card taken after this adjustment had been made, and we find that notwithstanding the points of cut-off are about what they should be if the valve lead is to be kept equal for the two ends of the cylinder (later at the head than at the crank end), nevertheless, the area of the crank end card is the greatest, whereas the contrary should be the case. This arises from a leaky valve at the head end, as is evident from the rapid fall of the expansion curve for that end in both diagrams.

SOME RECENT PRACTICE IN SETTING THE VALVES OF LOCOMOTIVES* consists in adjusting the lead for the running cut-off, instead of the full gear, the leads for the other gears being largely determined by the mechanism. This involves a negative or blind port at one or both full-gear crank centres; but, as might have been expected, this is found to have no deleterious effect on the running qualities in the full gear, owing to that gear being used only at starting, when the speed is low, and with the large port opening of the full gear no lead is required to properly fill the cylinder with steam. In point of fact, negative lead in the full gear is claimed by many to be an advantage, and to give an appreciable increase to the power of the engine when running in the full gear, due to the fact that positive lead offers resistance to the motion of the piston. The effect of the reduced lead in the running gear is to cause the engine to ride easier, to reduce the frequency of hot bearings, and, by reducing the strains, to lessen repairs. A slight gain in fuel economy is also claimed by some, due to the reduction of hurtful resistance to the motion of the piston and to a slight prolongation of expansion before release.

A leader in this movement is Mr. C. H. Quereau, of the Chicago & Missouri River Railroad, in Nebraska, who has done a good deal of experimenting on the subject, and has presented his conclusions in a paper before the Western Railway Club.

Mr. Quereau gives several indicator cards from the same engine with various settings of the lead, of which Figs. 3109, 3110, and 3111 are presented as examples. The effect of the change upon the steam distribution is apparent at once. The fact that the compression does not rise to boiler pressure will be seen, as has been already referred to, and from which deductions regarding the size of ports have been drawn.

This practice has been adopted by many progressive superintendents of motive power and railroad master mechanics. It is endorsed by the mechanical officers of the New York, New Haven & Hartford; Maine Central; Chicago, Burlington & Quincy; Chicago, Burlington & Northern; Chicago & Northwestern; Illinois Central; Boston & Maine; Lake Shore & Michigan Southern, and other leading roads.

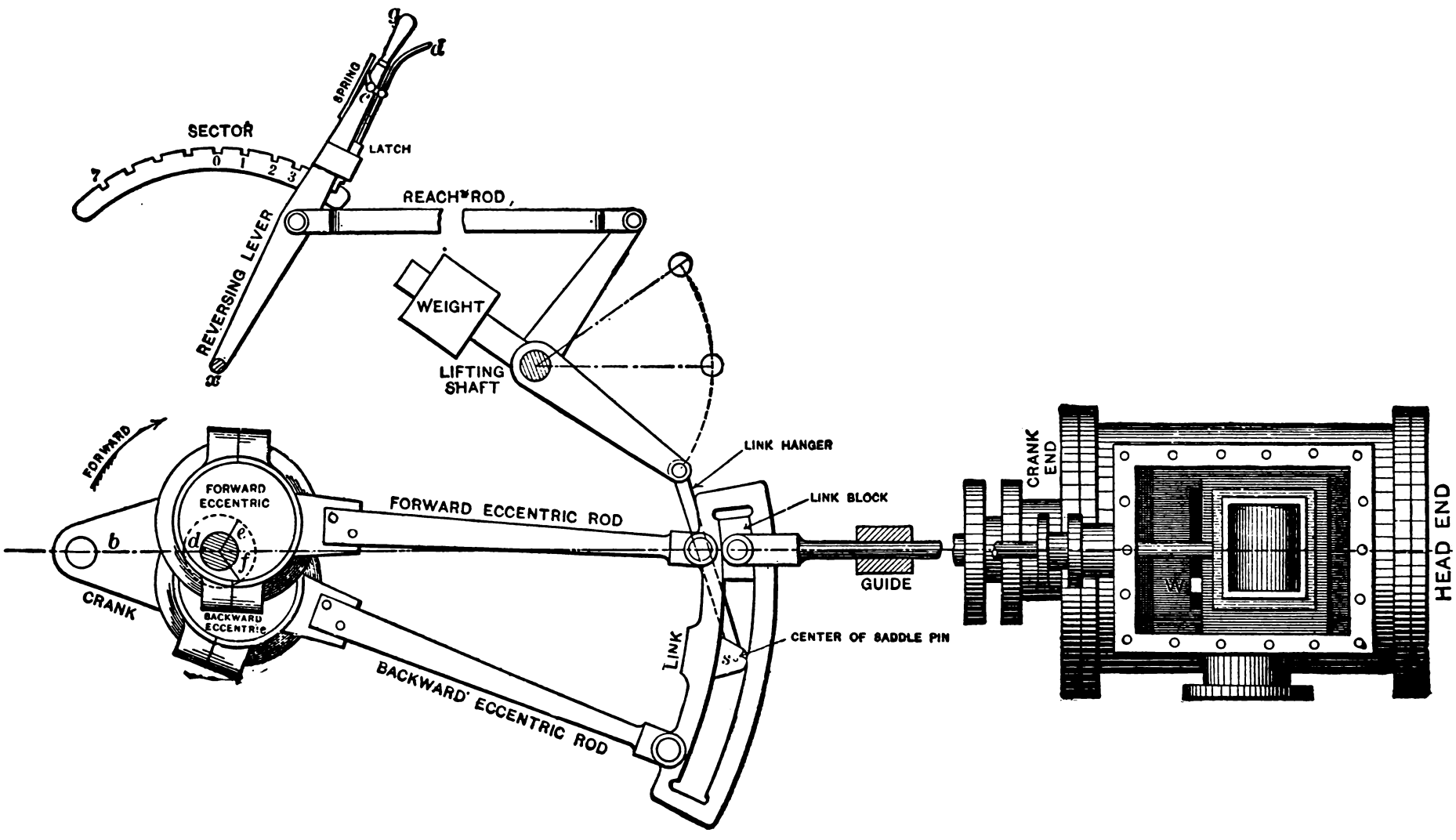

Fig. 3112.

The reduction of the lead in the running gear may be brought about by setting back the forward eccentric or the backing eccentric, or both, and in the latter case in equal or unequal amounts. Railroad mechanics who agree on the main point of a reduced running-gear lead, differ in the method used to accomplish it. Following is the practice of several roads in this respect:

The New York, New Haven & Hartford gives to fast passenger engines $\frac{1}{16}$ inch positive lead in full gear forward, and $\frac{1}{4}$ inch negative lead in the full gear back, resulting in $\frac{1}{4}$ inch positive in the running gear.

The Maine Central sets the valve line and line for the full gear forward, and gives $\frac{1}{4}$ inch negative lead in the full gear back on passenger engines.

The Illinois Central gives to passenger engines $\frac{1}{32}$ inch positive lead in the full gear forward, and then adjusts the backing eccentric to give about $\frac{3}{16}$ inch lead in the running cut-off.

The Lake Shore & Michigan Southern gives to passenger en-

* From an article by F. A. Halsey.

gines $\frac{1}{16}$ inch negative lead in the full gear forward and $\frac{3}{64}$ inch negative lead in the full gear back, resulting in about $\frac{5}{16}$ inch lead for the running cut-off.

The Chicago Great Western sets the valves of passenger engines line and line in both forward and back full gears, resulting in from $\frac{3}{16}$ inch to $\frac{9}{32}$ inch at 6-inch cut-off, and on mogul freight engines gives $\frac{3}{64}$ negative lead in both full gears, resulting in $\frac{1}{4}$ inch lead at 6-inch cut-off.

The Chicago & Northwestern recently specified for some 19 × 24 passenger engines $\frac{3}{16}$ inch negative lead in the full gear forward and $\frac{1}{4}$ inch positive lead at 6-inch cut-off, obtained by adjusting the backing eccentrics. These engines had Allen valves.

The diversity of practice is apparent; but, doubtless, many of the apparent discrepancies would disappear if the full details of the motions were known.

The effect of the length of the eccentric rods is so marked on the mid-gear leads that it has doubtless had an influence on the methods followed in different cases, even when substantially the same running-gear lead has been arrived at.

LINK MOTIONS.—The link motion is the simplest, most easily handled, and best of all mechanisms for enabling the direction of engine revolution to be reversed and at the same time vary the point of cut-off to regulate the power to meet the requirements.

A link motion is in full gear when it is in position to give the greatest amount of travel to the valve, as is the case in Fig. 3112, which represents an open-rod Stevenson's link motion.

An open-rod link motion is one in which the eccentric rods do not cross one another at the time the piston is at the crank end of the cylinder and the crank at its dead centre farthest from the cylinder, as in Fig. 3112. But when the crank is on the other dead centre and the piston at the head end of the cylinder, then the eccentric rods will cross one another.

On the other hand, a closed-rod link motion is one in which the eccentric rods are open when the piston is at the head end and crossed when it is at the crank end of the cylinder.

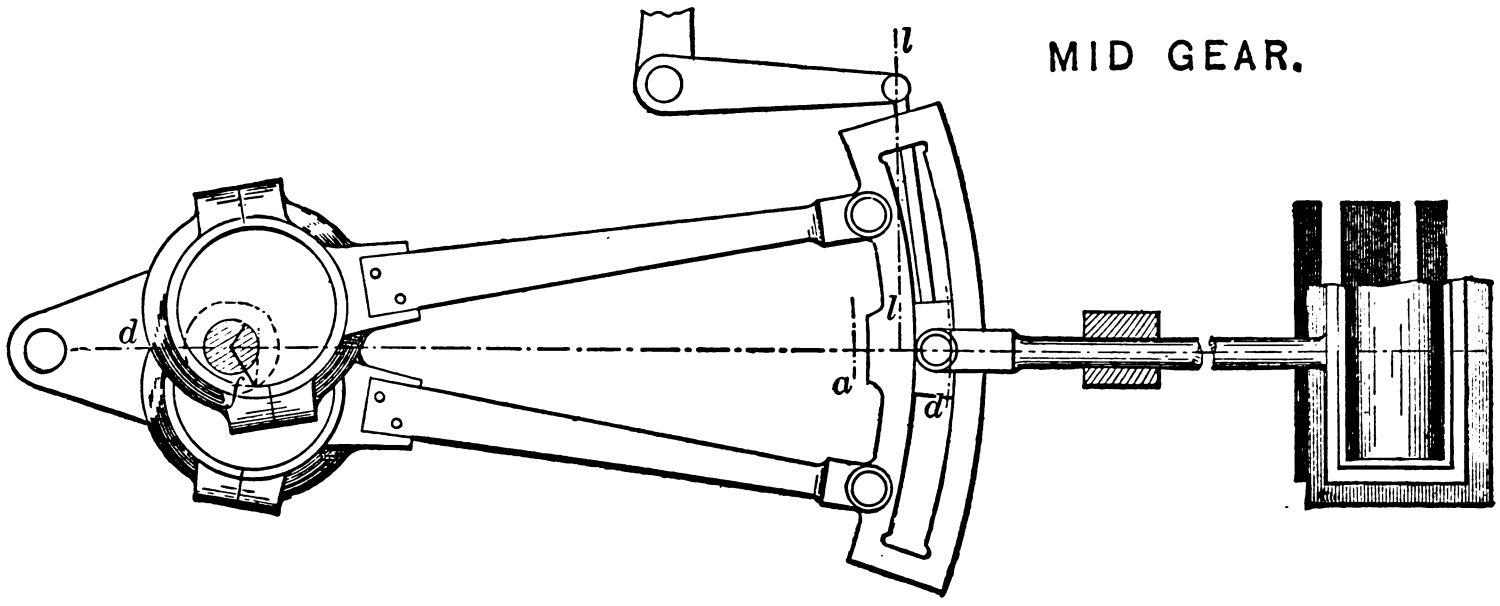

Fig. 3113.

The difference between the action of an open and a closed-rod link motion is that in the former the valve lead increases in proportion as the link is brought nearer to its mid position, as in Fig. 3113, in which position the travel of the valve is so reduced that the steam ports only open to the amount of the valve lead, whereas in a closed-link motion, moving the link from full gear to mid gear causes the lead to disappear, and renders it necessary, under some circumstances, to move the link so as to cause the engine to run a little backward before it can be started to run forward.

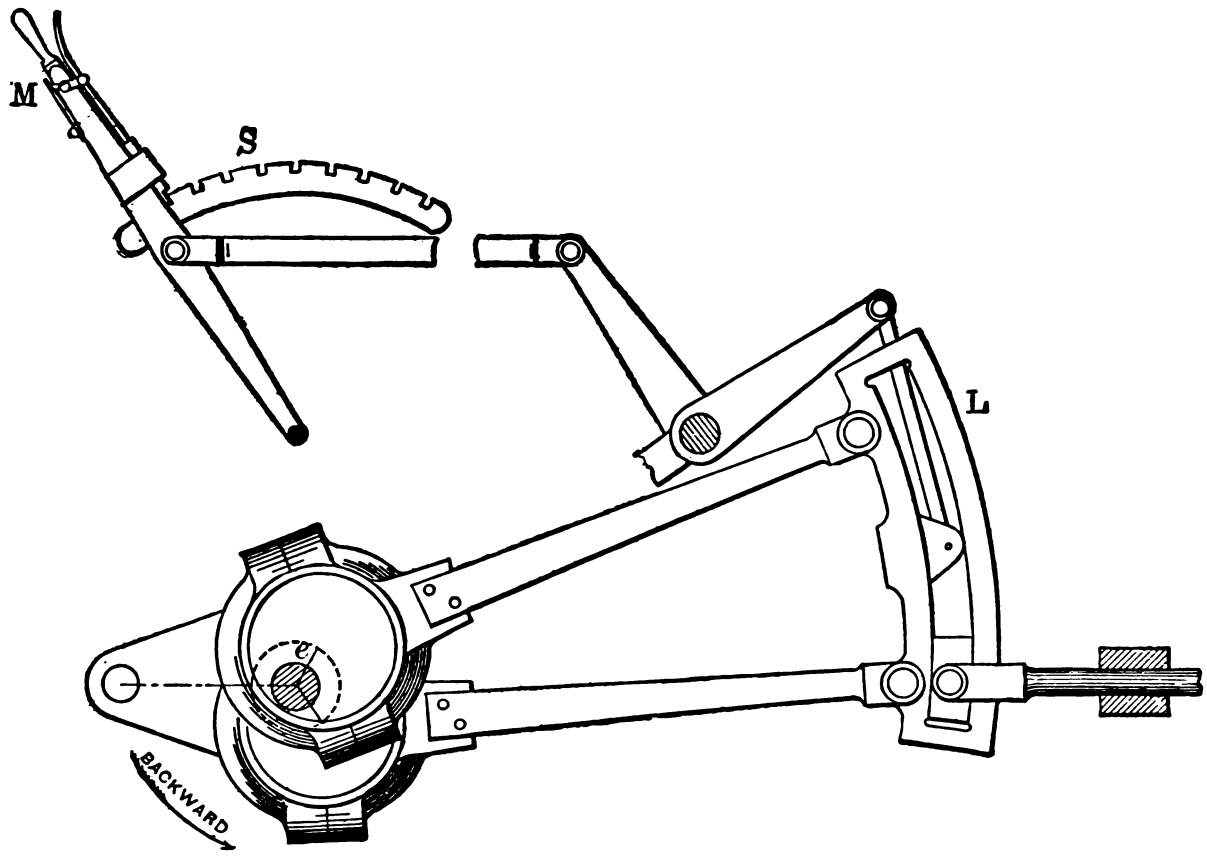

Fig. 3114.

To cause the engine to run backward, the link is shifted or moved so as to bring the link block or die into the lower half of the link, as in Fig. 3114.

Between the position of full gear, giving the full travel to the

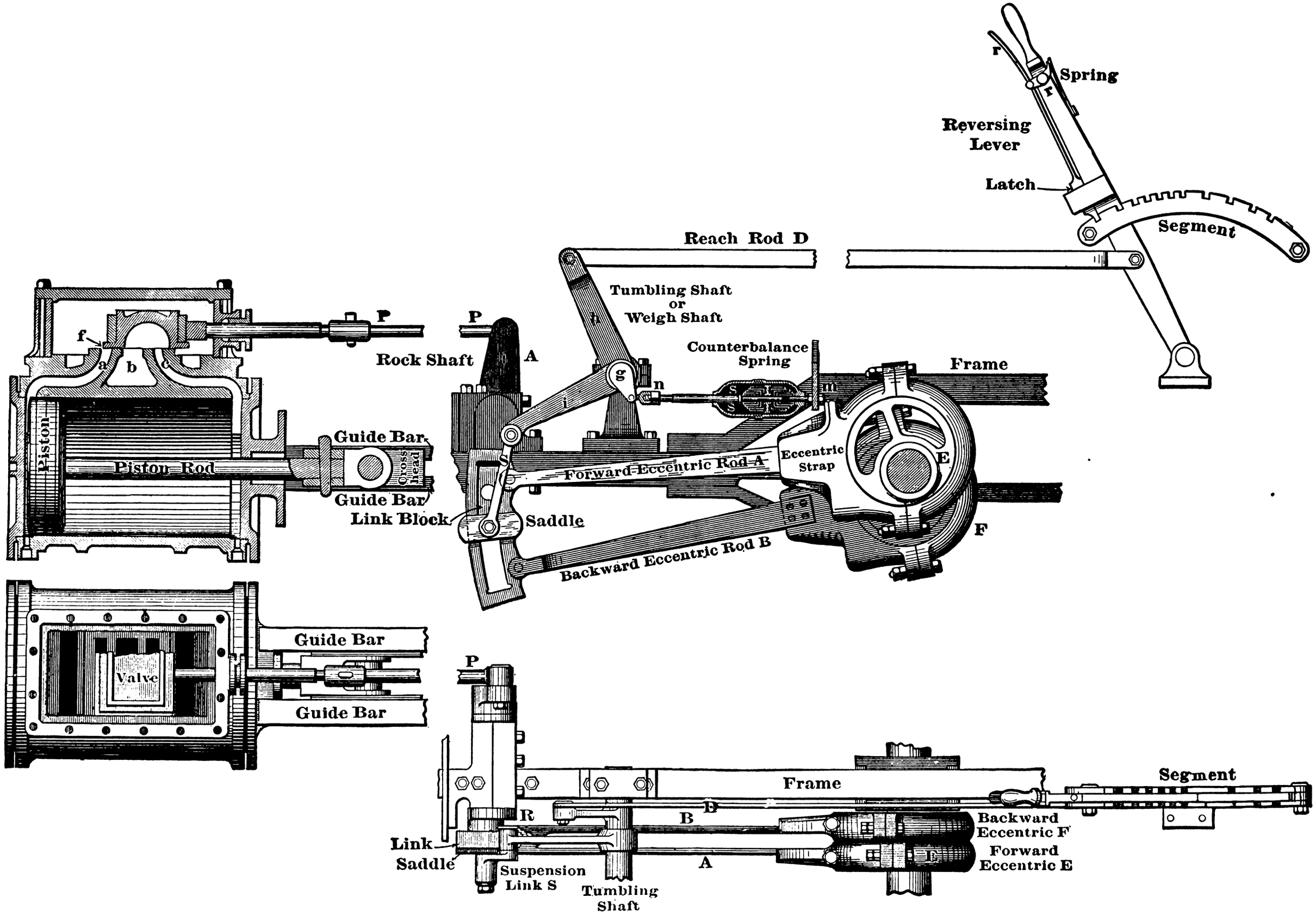
r
Spring
r
Reversing Lever
Latch
Segment
Reach Rod D
Tumbling Shaft or Weigh Shaft
h
P
P
A
Rock Shaft
f
a
b
c
Counterbalance Spring
Frame
g
n
m
i
Piston
Piston Rod
Guide Bar
Cross head
Guide Bar
Link Block
Saddle
Forward Eccentric Rod A
Eccentric Strap
E
F
Backward Eccentric Rod B
Guide Bar
Valve
Guide Bar
P
Frame
Segment
R
B
D
Backward Eccentric F
Link
Saddle
Suspension Link S
Tumbling Shaft
A
Forward Eccentric E

Fig. 3115.

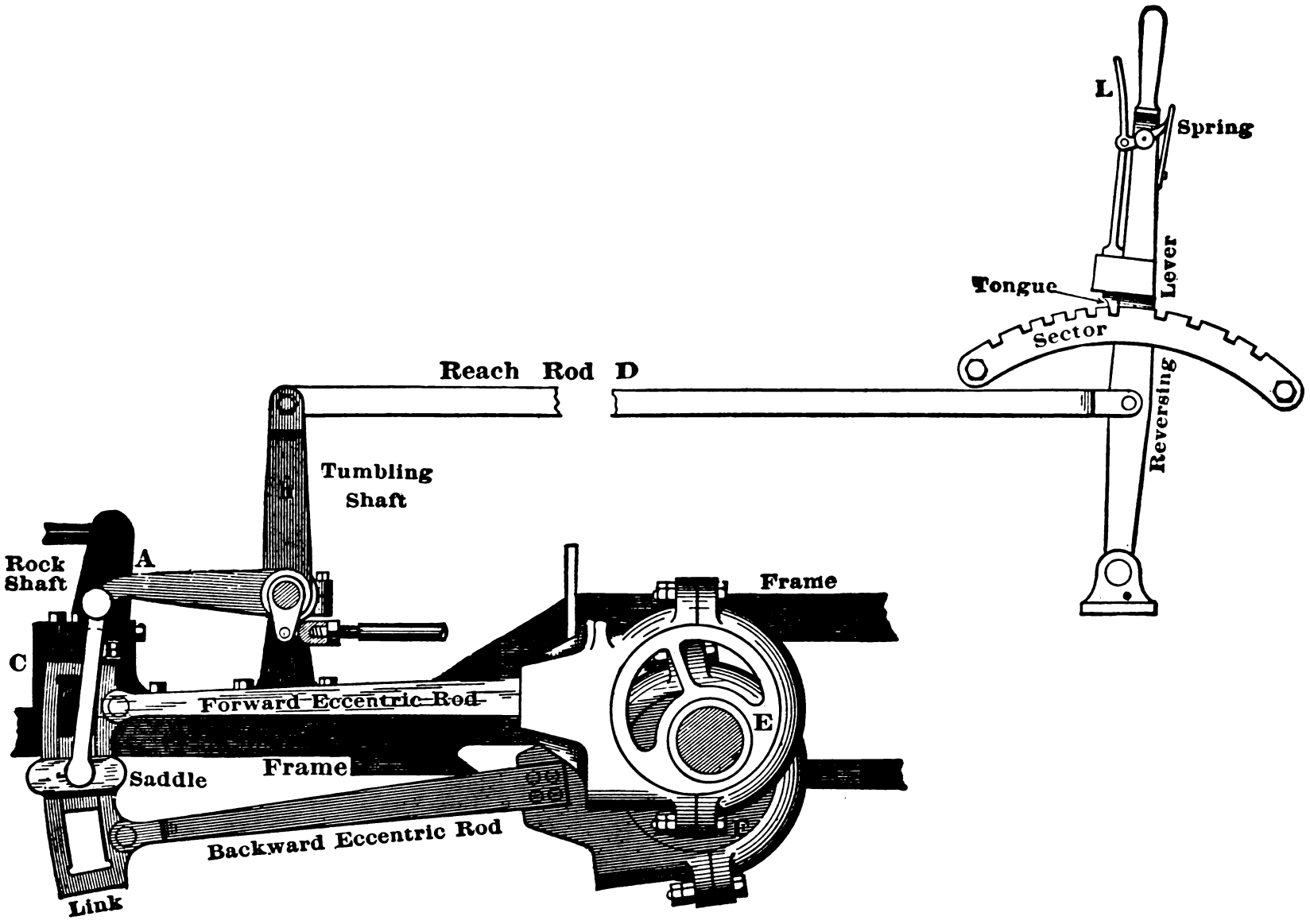

Fig. 3116.

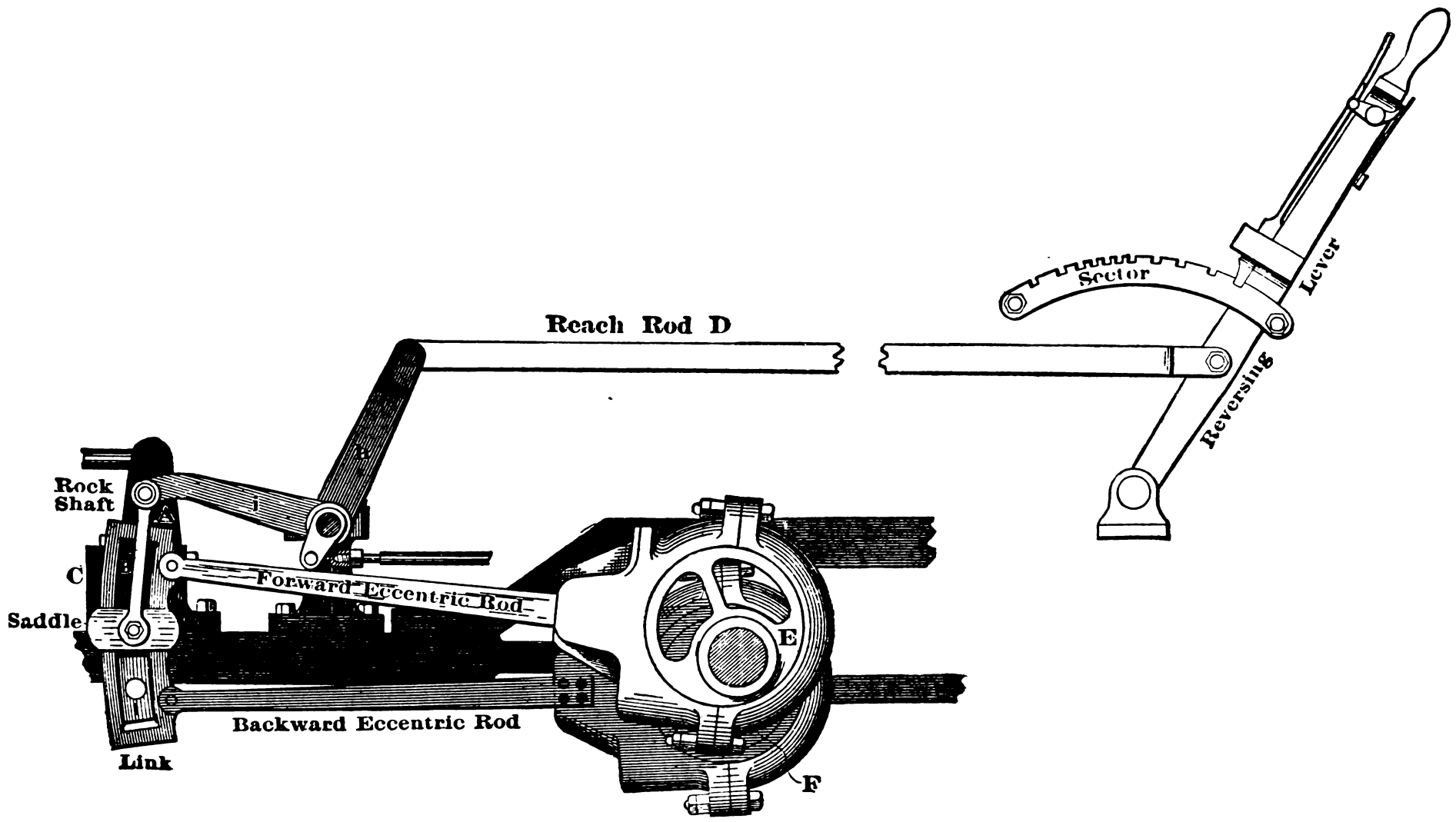

Fig. 3117.

valve and the longest point of cut-off; and mid gear, which gives the shortest amount of valve travel, various points of cut-off and amounts of expansion may be given by shifting the link into the required position by means of the reversing lever, whose latch or tongue fits into the notches in the sector, notch plate, or quadrant, as it is sometimes termed.

As the link is suspended by its saddle pin S and the link hanger, therefore its motion is to swing or partly rotate on the pin S, and at the same time ending in the arc of a circle whose centre of motion is in the pin at the upper end of the link hanger, which is pivoted to the lower arm of the lifting shaft (sometimes termed the tumbling shaft).

It will clearly be seen that with the position the parts occupy in Fig. 3112, and the crank motion beginning in the direction of the arrow, the forward eccentric will move the top of the link to the right, and therefore the valve will move to the right, while the backward eccentric will move the bottom end of the link to the left.

In full gear, forward, the bottom eccentric rod has but a very slight effect indeed on the motion of the valve, because both the link hanger and the link block will permit the link to swing on the centre of the link block pin as a pivot.

If now we turn to Fig. 3114 for the full gear backward, we shall see that these conditions are reversed, and the backward eccentric becomes the effective one, being in line with the valve spindle.

By shifting the link from one gear to the other, therefore, we have merely changed the direction in which the link will move the valve, and, therefore, the direction in which the engine would run.

In Fig. 3115 is shown the arrangement of a link motion for an American locomotive, the piston being at the head end of the cylinder, and the port *a* open to the amount of the lead, with the reversing lever set for full gear forward.

The link block is here carried upon the lower arm of a rocker, rock shaft, or rocking shaft, as it is promiscuously termed. The upper arm A of the rocker drives the valve through the medium of the valve rod or valve spindle P. The valve, therefore, moves in the opposite direction to that in which the link block moves, and the eccentrics are therefore at an angle of less than 90° to the crank. The amount to which they are less than 90° is the angular advance.

When the piston is at the crank end of the cylinder, the valve must be moved toward the head end to admit live steam behind the piston; and as the link block must move in the opposite direction to the valve, it is clear that it is the eccentric which follows the crank that must be connected to the upper end of the link, and hence the eccentric rods are crossed.

Instead of a weight being used to counterbalance the link, etc., the rod *n* connects to a volute, or coiled, spring.

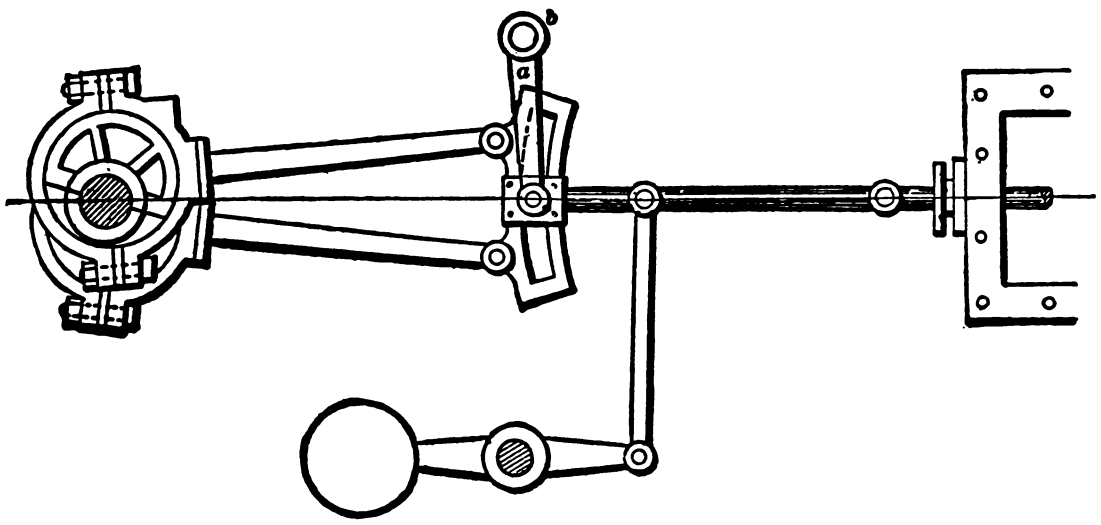

Fig. 3119.

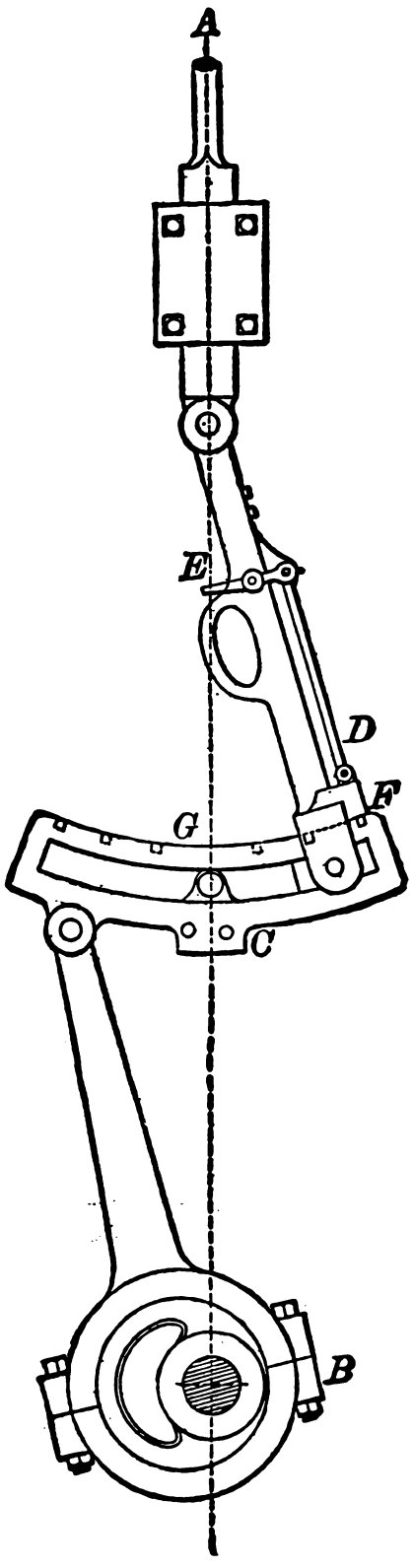

Fig. 3118.

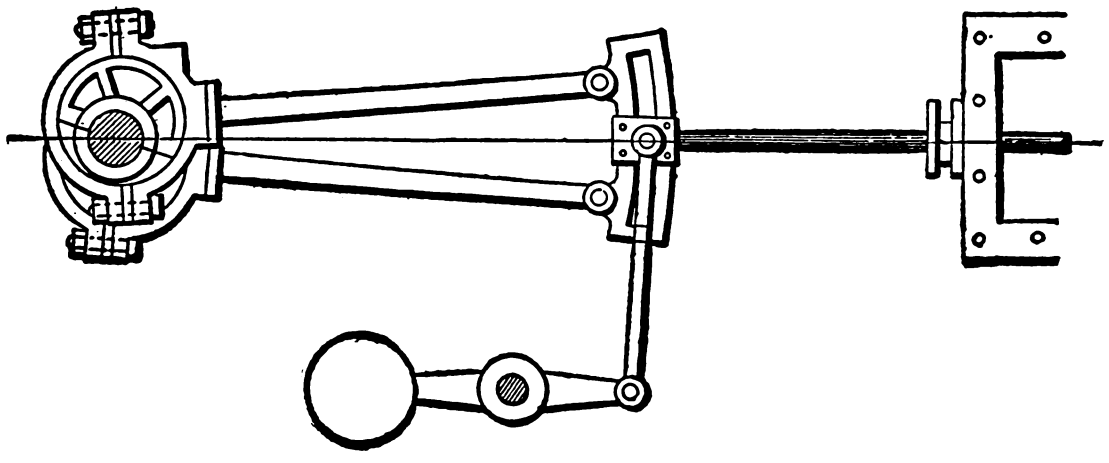

Fig. 3120.

Fig. 3116 represents the same gear in mid position and Fig. 3117 in full gear for the backward motion.

MODIFIED FORMS OF LINK MOTION REVERSING GEARS.—A link motion in which but one eccentric is employed is shown in Fig. 3118, which is taken from *The American Machinist*. The saddle pin is on the line of centres A and remains there, the link block being moved along the link slot to vary the point of cut-off, or reverse the direction of motion, as in Gooch's link motion. On the rod E that connects the link block and slide spindle there is provided a latch F (on the end of rod D) which, in conjunction

with the notches on the concave side of the link, holds the link in its adjusted position. In this arrangement, there is the objection that when the link block and rod E are at the same end of the link as the eccentric rod, the weight of both E and the eccentric rod is borne by the eccentric.

In the Stevenson's link motion, shown in Fig. 3112, and the Gooch's link motion, shown in Fig. 3119, the lifting shaft is shown above the link, but it is often more convenient, from the construction of the engine, to place it below the link, as in Figs. 3120 and 3122, which are from *Mechanics*. This plan is common upon engines for hoisting purposes.

STEAM REVERSING GEARS.—In cases where the power required to move the link motion is more than can be exerted by hand, a special steam cylinder is employed to assist in moving the reversing shaft, examples of this kind being given in Figs. 3121 and 3122, which are from *Mechanics*. In Fig. 3121, A is a steam cylinder,

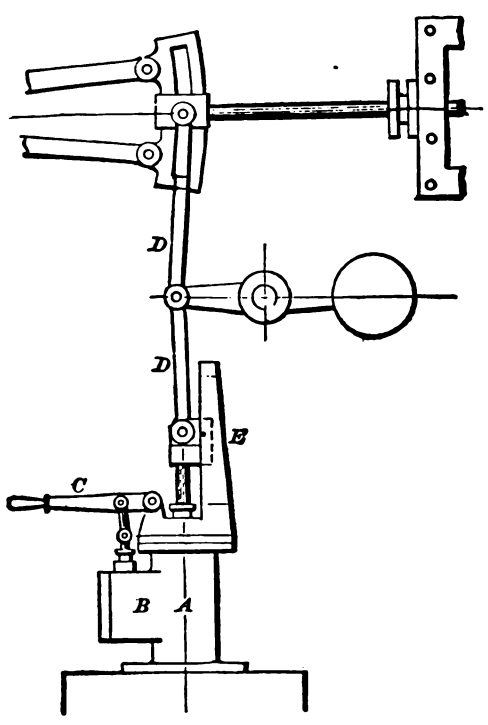

Fig. 3122.

with ports, slide valve, steam chest, etc., of the ordinary construction. C is the main reversing lever, the bottom end of which is keyed to the tumbling shaft; its upper end projects a few inches above the quadrant, and is provided with a detent for latching it to the quadrant. The connecting rod H, of the steam cylinder, is attached to this lever at B. D is the hand lever, having its fulcrum at I on the main lever. Its upper end has a handle and thumb latch, of the ordinary construction, attached by a rod to the detent on the main lever. When the hand lever is in the central position, the pin at its lower end coincides with the axis of the tumbling shaft (if the gear is not at the end of the tumbling shaft, the shaft will require to be cranked to allow for this). On the main lever, at K, are stops which limit the motion of the hand lever to the travel of the valve. The lower end of the hand lever is connected by links and levers to the valve stem, as shown. The weight of the links, etc., is balanced by a weight in the usual

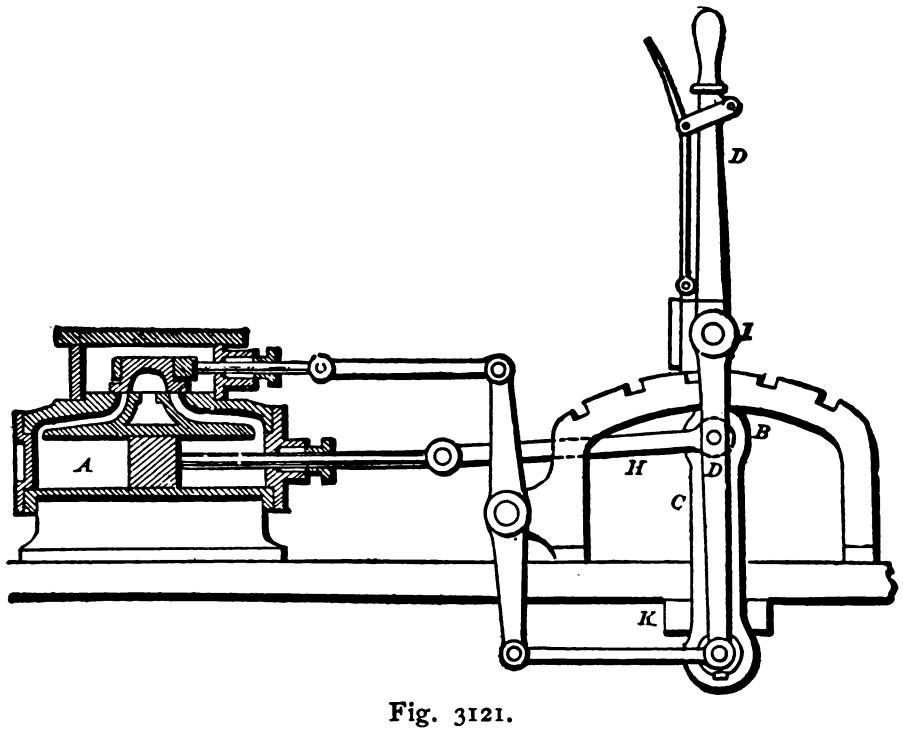

Fig. 3121.

way. The engineer unlatches the detent, pulls the hand lever in the direction he wishes it to go, when the lever moves until its lower end strikes the stop K. The steam valve is then in the proper position to admit steam to the cylinder A, and its piston assists him to move the lever. When he wishes to reverse, he pushes the hand lever in the opposite direction, which changes

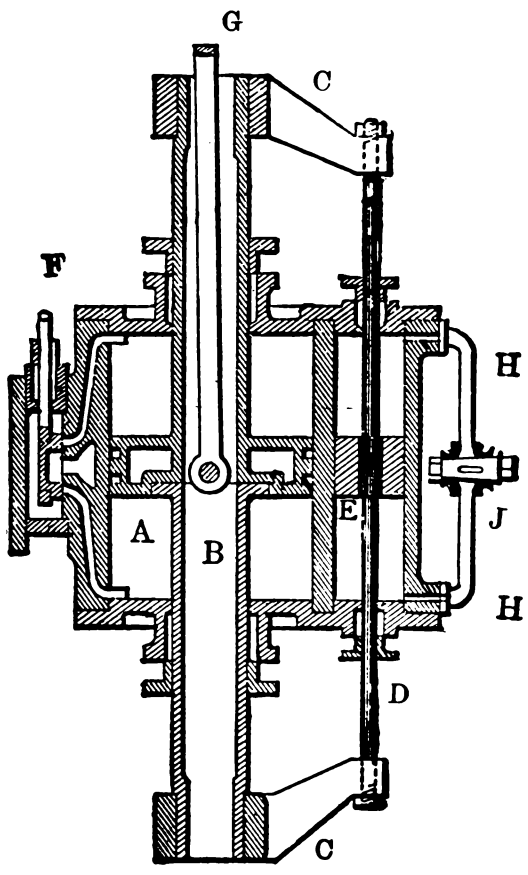

Fig. 3123.

the position of the valve and reverses the operation. He can thus move the lever and latch it at any point of the quadrant. In Fig. 3122 the hand lever is dispensed with, the steam piston being attached directly to the reversing lever. A is the reversing cylinder, B the valve chest, C the small lever for moving the valve, and

D D the rods connecting to the links. There is a valve on the exhaust pipe of this small cylinder, which is used for regulating the rapidity of the motion of the piston. A right and left hand screw can be arranged at E with two nuts, and used for regulating the amount of the travel of the piston, and thus effecting the cut-off in the cylinder by changing the travel of the main valve.

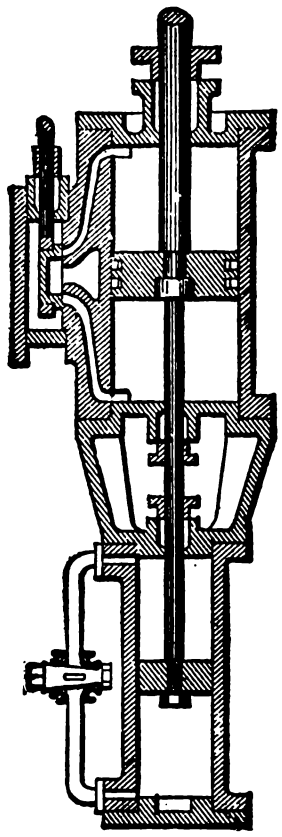

Fig. 3124.

This makes a very satisfactory gear for reversing on a reversible rolling-mill engine. For hoisting purposes, where great delicacy is required, it is open to the objection that it has nothing positive by which the load may be stopped at a fixed point. This arrangement may be modified by the addition of a cataract, as shown in Fig. 3123, in which A is the steam cylinder and B a hollow piston rod having arms C, for carrying the rod D, on which is the cataract piston E; at F is the rod for the valve that admits steam to A, and at G is the piston rod that attaches to the lifting-shaft arm. H H is a pipe having communication with each end of the cataract cylinder, which is filled, on each side of the piston E, with water or oil. Now suppose that steam is admitted to cylinder A, and it is clear that if cock J of the cataract pipe is closed the piston in A cannot move, because it is connected, through its rod and the arm

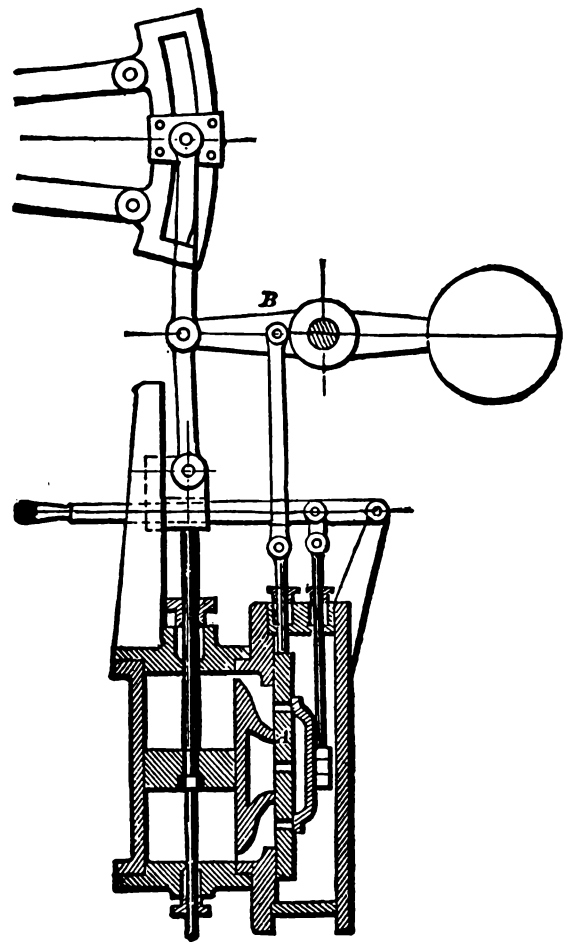

Fig. 3125.

C, to the cataract piston E. But if we open the cock J, then the parts will move; the water on one side of piston E passing through pipe H to the other side of E. The speed with which motion will ensue obviously depends upon how widely cock J is opened, or, in other words, upon how fast the water can pass from one to the other side of piston E. By regulating the amount of opening of cock J, therefore, the motion of the steam piston in cylinder A may be made as slow as desired, enabling the engineer to shut off steam to A, and thus arrest the mot reversing gear

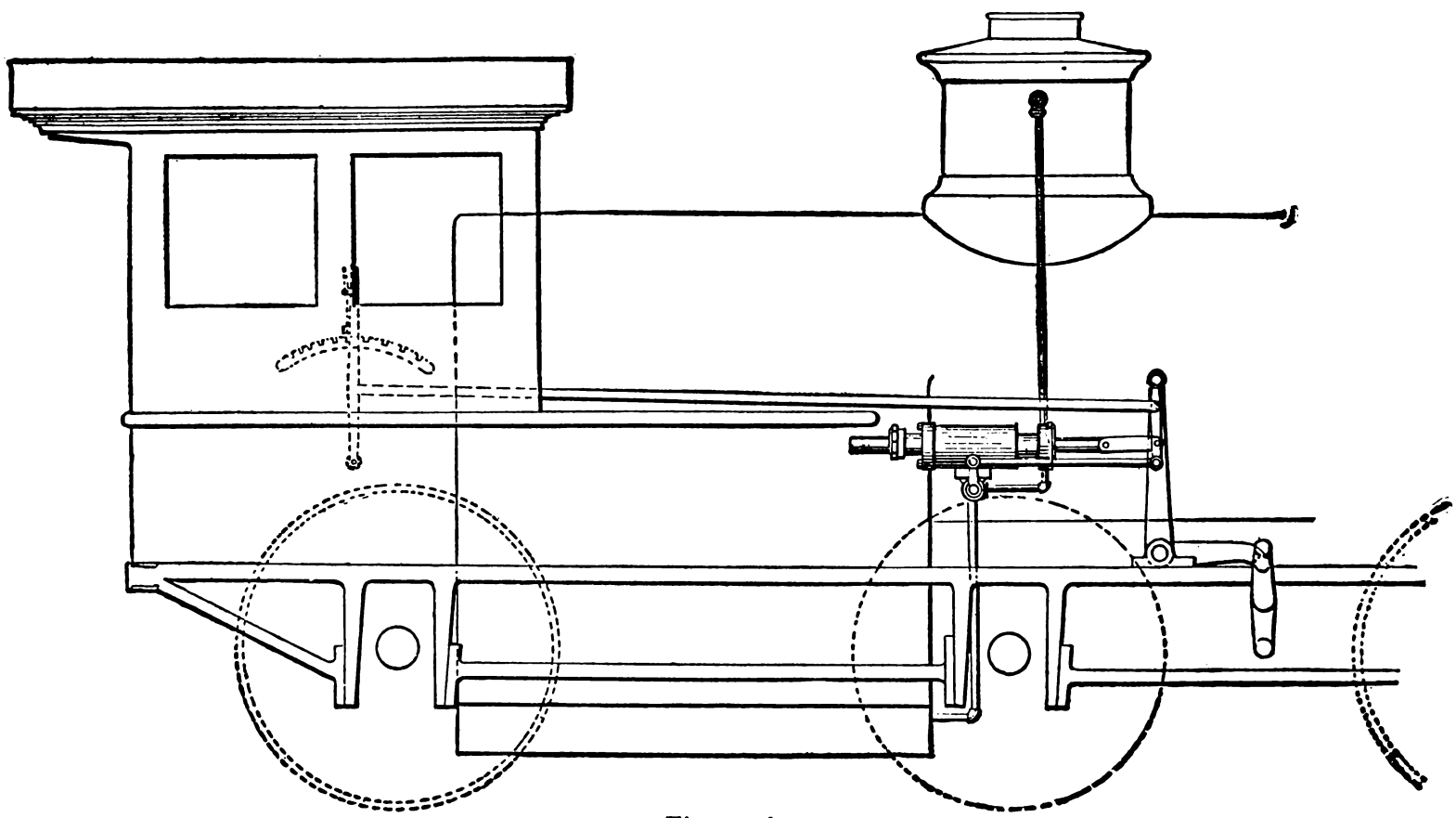

Fig. 3126.

at any required point, with great precision. The cataract cylinder may obviously be placed at the end of the steam cylinder, as shown in Fig. 3124, in which case one piston rod serves for both the steam and the cataract pistons. Fig. 3125 (from *Mechanics*) represents a form in which an auxiliary valve is employed, the main valve connecting to the lifting shaft at B, while the auxiliary valve is operated by a hand lever.

In this arrangement the hand lever may be operated to open the ports in the main valve, which will move until, by passing beneath the auxiliary valve, its ports are again closed, when motion will close, because the steam can neither enter nor exhaust from the cylinder, hence the motion of the piston follows that of the hand lever, and when the link motion has moved to the required position, the lever handle may be released and will remain at rest.

Figs. 3126 and 3127 represent a steam reversing gear, designed by Mr. W. E. Good, and employed on locomotives on the Philadelphia & Reading Railroad. In Fig. 3126 the gear is shown in position on the engine, while in Fig. 3127 it is shown detached with the cylinder in section. If this gear is simply started, it will continue its movement in the same direction until, by dropping the latch into the quadrant notch at the desired point of cut-off, further movement is arrested. The link gear of the engine is simultaneously adjusted to the position corresponding with that of the reverse lever. It remains fixed in that position until further change is made by the reverse lever.

From this general statement, it will be seen that not only is the link or other gear of the engine moved by the steam reverse, but also that the reverse lever has communicated to it, by the peculiar arrangement of the reverse gear, the necessary force to move it to any desired direction, without any effort on the part of the engineer, save that of starting it. In Fig. 3127, A is a steam cylinder, and B the piston whose rod C is guided by two glands, which are screwed up somewhat tightly. C is attached to the arm D of the reverse shaft. E is the steam valve operated by the rod E^2, which is pivoted at F^1 to the lever F. The arm D^2 F^2 connects D to F, and the rod G connects the handle H to F at the point F^3. The valve E covers the steam ports by about $\frac{1}{32}$ of an inch. The gear is shown in the full lines as being in mid position. If the lever H is moved to the right, it will, through G, move F on F^2 as a pivot, and give end motion to the rod E^2, and by this means to the valve E, admitting steam through the passageway *a*, and moving B in the same direction as the handle H is moved. At the same time, the link will be lowered. When H is brought to a stop, the arm F operates on its pivot F^3, and as D continues to move to the right, it moves F^2 to the right and F^1 to the left, so that the rod E^2 closes the valve E, and the piston B comes to rest. The link is held by friction on the piston rod C. If, for any reason, the piston B should begin to creep, its rod would move the rod D at C^2, the motion being increased by D^2 by reason of the increased length of leverage. This increased motion would be conveyed to F, which would operate on its pivot E^3, moving F^1 and, therefore, E^2 to the left. E^2 would move the valve E so as to admit steam through the passage *a'* to the side *b* of the piston. The piston would, therefore, be resisted by the steam pressure, and would be held stationary by it. Since there is but $\frac{1}{32}$ inch lap on the valve E, it will be seen that the increased motion at D^2, over that at C^2, will cause steam to be admitted through *a'* with a very small amount of piston motion. This amount may be regulated at will by increasing the height of D^2 above C^2.

It will be observed, therefore, that this apparatus embodies a very simple and ingenious motion. The action of the parts centring on the fact that moving H forward causes F^1, E^2, E, and therefore B, to move in the same direction. On the other hand, if motion begins at B instead of at H, then F^1, E^2, and E move in the opposite direction, causing steam to enter and check the motion of B. It is obvious that the same results are obtained in whatever direction or to whatever amount H is moved, and that the checking or detaining action is entirely automatic.

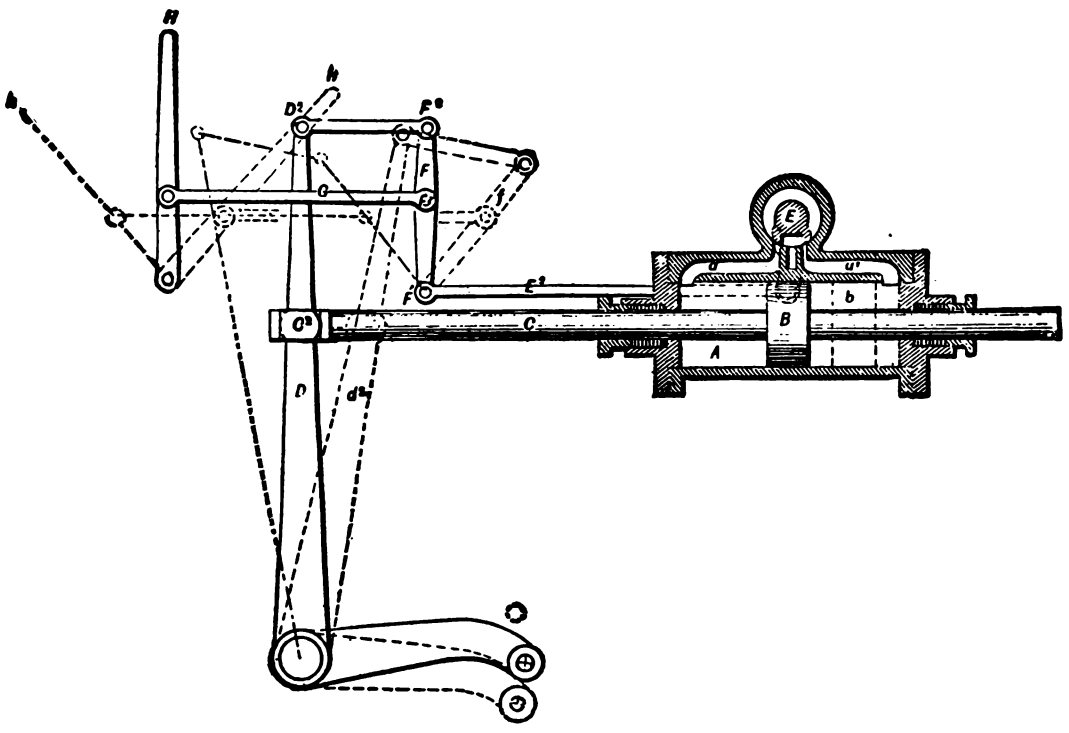

Fig. 3127.

COMPOUND ENGINE AND RAWORTH ENGINE.—A compound engine is one in which the steam is used in two cylinders, the second receiving its steam from the exhaust of the first and giving power by using the steam more expansively.

Obviously, therefore, there is upon the exhaust side of the first or high-pressure cylinder a back pressure equal to that on the admission side of the second or low-pressure cylinder.

Engines in which the steam passes through more than two cylinders are termed multi-cylindered, or designated from the number of cylinders as triple expansion engines, quadruple expansion engines, etc.

The simplest form of compound engine is the tandem compound, in which, the two cylinders being in line one behind the other, both pistons are upon one rod.

In the Figs. from 3128 to 3132 is represented the construction of a tandem compound engine by the Ames Iron Works of Oswego, New York.

The high-pressure cylinder is carried at one end by a frame secured upon a bed plate, and at the other by a central piece secured to the same bed plate and affording ingress to the glands of the two cylinders, while at the same time carrying the low-pressure cylinder. The exhaust from the high into the low pressure cylinder is through the pipe E, Fig. 3128, and that from the low pressure through the pipe E'.

Fig. 3129 is a longitudinal section on a vertical plane and Fig.

3130 a similar section on a horizontal plane. The construction of the shaft governor is shown in Figs. 3131 and 3132.

CYLINDER PROPORTIONS FOR COMPOUND ENGINES.*—"At the Chicago meeting of this society, forming part of the International Engineering Congress, a paper was presented entitled 'Compression as a Factor in Steam-Engine Economy,' in which a theory was elaborated for measuring and harmonizing the free-expansion losses at both ends of the diagram. In the paper referred to it was also suggested that this system of measurement might furnish valuable information as to the relative losses from free expansion in the several cylinders of compound engines, and the society was promised a paper on this subject at a future meeting.

"In offering this paper as a fulfilment of that promise, the author is aware that he is widening the application of a law suggested in the former paper, which law was not as generally accepted as had been anticipated. This scepticism on the part of some of our leading members fortunately led to a series of experiments, since conducted at the Stevens Institute of Technology, which experiments are the subject of a paper presented at this meeting of the society by Professor Jacobus, who conducted the experimental work. The results as reported seem to confirm the law in question, and it is therefore with greater confidence that its further application is here made.

"To make this application, let it be assumed that cylinders are to be selected for a triple expansion engine, where the boiler pressure is 150 lbs. above atmosphere, and the vacuum gauge shows 26 inches. Allowing for wire-drawing, let it be assumed that the initial pressure in high cylinder will be 160 lbs. absolute, and the back pressure in low cylinder 3 lbs. absolute. The total range of pressure is therefore 157 lbs., and the corresponding range of temperature 221° Fahr.

"The object of compound engines being to reduce cylinder condensation by dividing the range of temperature judiciously between two or more cylinders, the first step is to decide through what range of temperature each cylinder shall work. In doing this, the desirability of a tolerably uniform division of work between the various cylinders forming the system must not be overlooked, although it cannot be considered good engineering to impair the economy of the engine materially to accomplish this result, as each engine of the system may be built to carry any load found desirable to put upon it. If the range of temperature is divided equally between the three cylinders in the proposed engine, the greater internal surface of the low cylinder would warrant the expectation of greater cylinder condensation than in the smaller cylinder, and if so, the total condensation can be reduced by giving the low-pressure cylinder less range of temperature and the high cylinder more.

"Cylinder condensation in this investigation, whether considered relatively or collectively, must be made to include the steam consumed in the jackets of each cylinder, if jackets are used. Whatever may be true in regard to the best range of temperature for each cylinder, the logic of what is to follow will apply with equal force, and therefore, for the purpose of illustration, it will be assumed that the temperature is to be equally divided. This will require that the high cylinder works between 160 lbs. absolute and 57 lbs., the intermediate between 57 and 16 lbs., and the low cylinder between 16 and 3 lbs. absolute pressure.

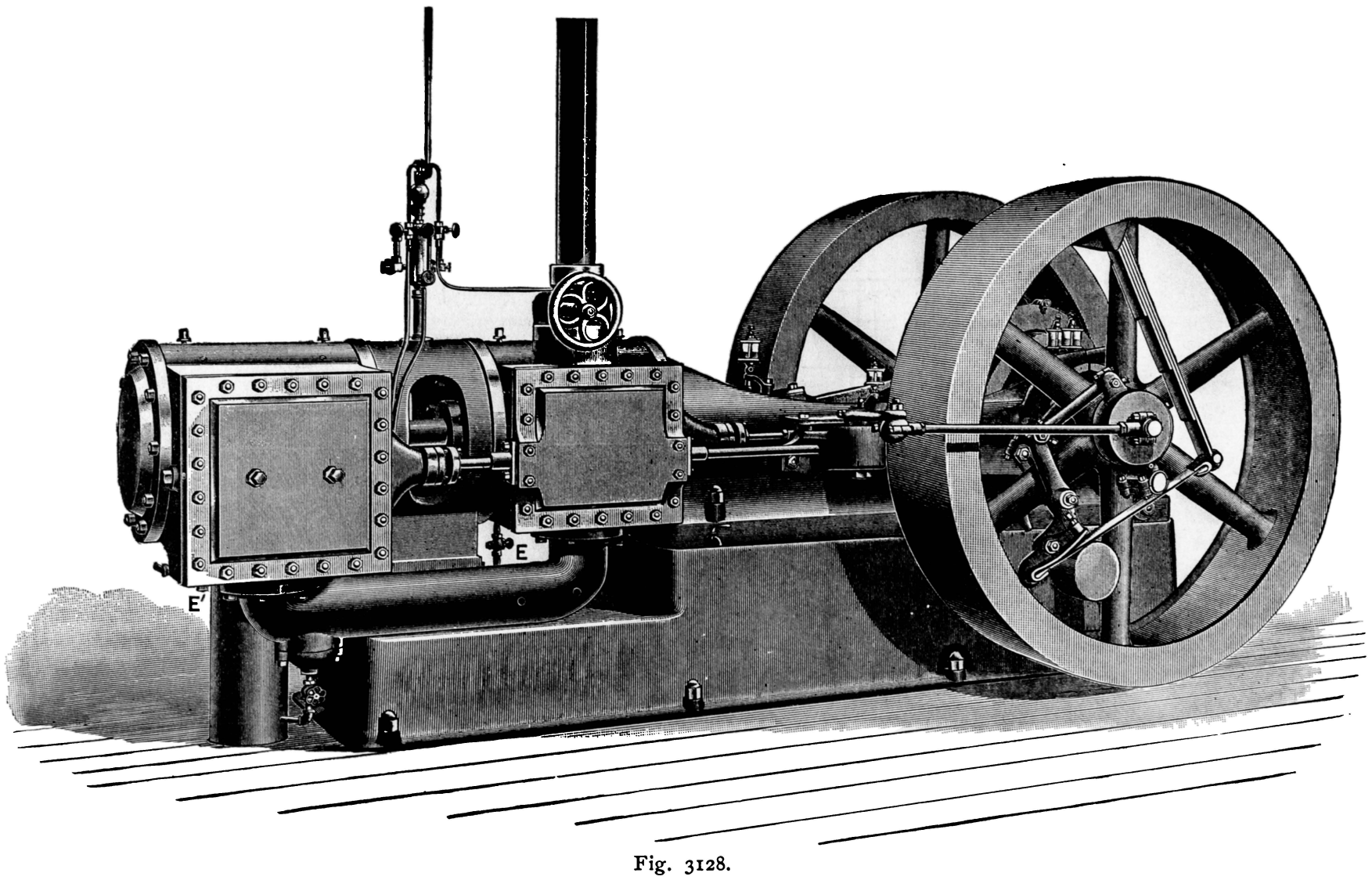

Fig. 3128.

"Figs. 3133, 3134, and 3135 represent theoretic diagrams between each of the three divisions of pressure mentioned. In each case V V represents the vacuum line, and X X the atmospheric line, and in each case A F represents the piston travel. The clearance is assumed to be 4 per cent. of the piston displacement, as indicated. For convenience in constructing the curves and measuring their enclosed areas, the following scales have been chosen:

Fig. 3133	Scale 50 lbs. to the inch.
Fig. 3134	" " " " " "
Fig. 3135	" " " " " "

"In each case A B C D represents a theoretically perfect diagram, so far as free expansion is concerned, because expansion is carried to the line of return pressure, and compression fills the

* A paper read before the American Society of Mechanical Engineers, by Frank H. Ball, New York City.

clearance space to initial pressure. It is hardly necessary to say that the curves here shown are Mariotte curves, and not adiabatic, as the latter are seldom used and are considered an unnecessary refinement in this investigation. The successive curves in each diagram which follow the curves B C, represent later points of cut-off, and they are continued beyond the limits of piston travel until they intersect the line of return pressure. The areas of enclosed spaces are indicated by figures. Thus in Fig. 3135 the area of the theoretically perfect diagram A B C D is 2.68 inches, and B B_1 C_1 C B is .90 inches, etc.*

"The next step is to determine the best point of cut-off for each cylinder. In this investigation each cylinder must be considered separately, and treated as though it was a single cylinder engine working between the limits of pressure indicated, and it may be asserted without fear of successful contradiction that if any cylinder of a compound engine is not realizing the highest economy obtainable from a single cylinder engine working between its limiting pressures, then the engine as a whole is falling short of its possibilities. It is also true that if, because of cylinder condensation, it is not economy to expand to the line of back pressure in a single cylinder engine, the same is true of every cylinder of a compound engine, it being only a question of the degree of free expansion permissible in each case.

"To those who believe that there ought to be no 'drop' in any of the cylinders of a compound engine except the low, the foregoing will seem rank heresy. They argue that if there is 'drop' in the high cylinder there is free-expansion waste, and by earlier cut-off in the low cylinder the receiver pressure may be raised until the drop in high cylinder disappears, thus eliminating free expansion and improving the economy of the system. This is a plausible fallacy which represents only one side of the question, the other side being that by raising the receiver pressure the range of temperature is increased in the large cylinder, thereby increasing the cylinder condensation in this cylinder without effecting a corresponding reduction of condensation in the smaller cylinder. Looking at this question from another point of view, let it be admitted for the moment that the economy of the engine will be improved by raising the receiver pressure until the 'drop' in high cylinder disappears. Then considering the high cylinder alone, we have a diagram in which expansion is carried to the line of back pressure, which cannot be considered the most economical diagram from any engine whose internal condensation is not in proportion to the steam used, which is the recognized condition of all steam-engine cylinders. Therefore the economy would be improved by using a cylinder of smaller diameter, with less exposed surface for condensation and necessarily some 'drop' at exhaust opening. Then if it is true that better economy will be realized by raising the receiver pressure again to eliminate the drop as before, it only requires a few successive stages of this development to dispense with the high cylinder altogether, completing the whole expansion in the low cylinder, and at the same time improving the economy at every step in that direction, reach-

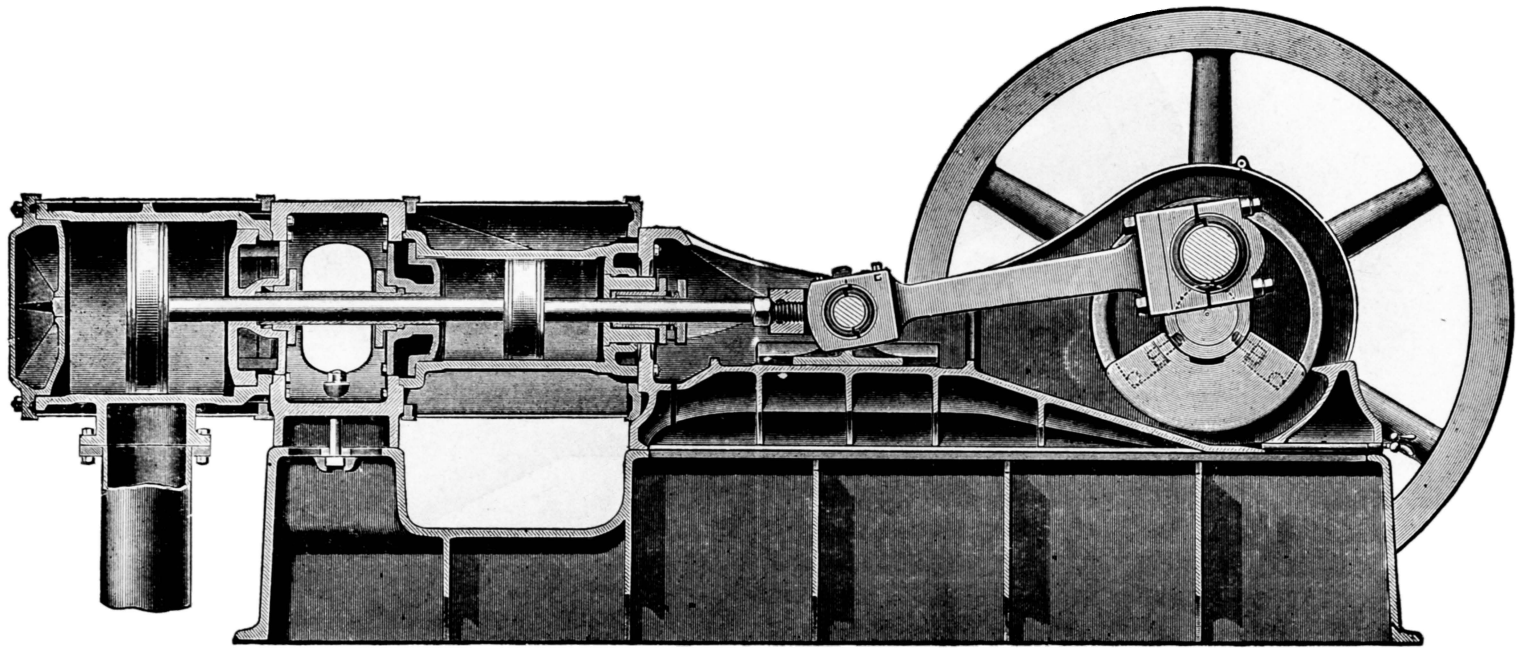

Fig. 3129.

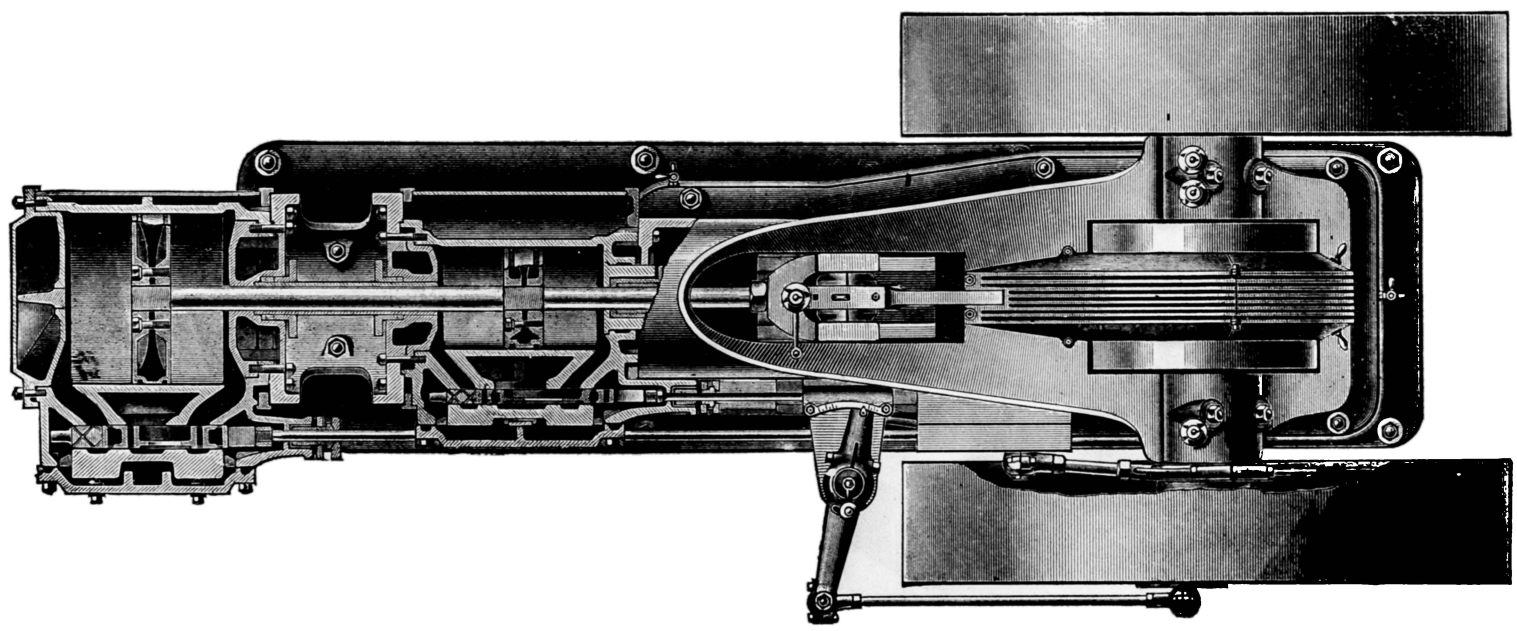

Fig. 3130.

* For convenience of publication the diagrams of Figs. 3134 and 3135 have been reduced in size, and therefore, while the areas remain relatively the same, the figures given are the actual areas of the original diagrams.

ing the highest economy when the low cylinder covers the entire range of expansion and the engine becomes a single cylinder engine instead of a compound. To those who still adhere to the belief that what is true of one cylinder of a compound engine is not true in any degree of the others, and that one cylinder of an engine may be wasteful in its performance, without affecting the aggregate performance of the system, the reasoning of the following pages will not be convincing. To those who believe that each cylinder must realize the most economical performance for a single cylinder working between its limits of pressure, and believe also that cylinder condensation makes it impossible to obtain this by expanding to the line of back pressure in any cylinder, the method of investigation which is to follow will be of interest.

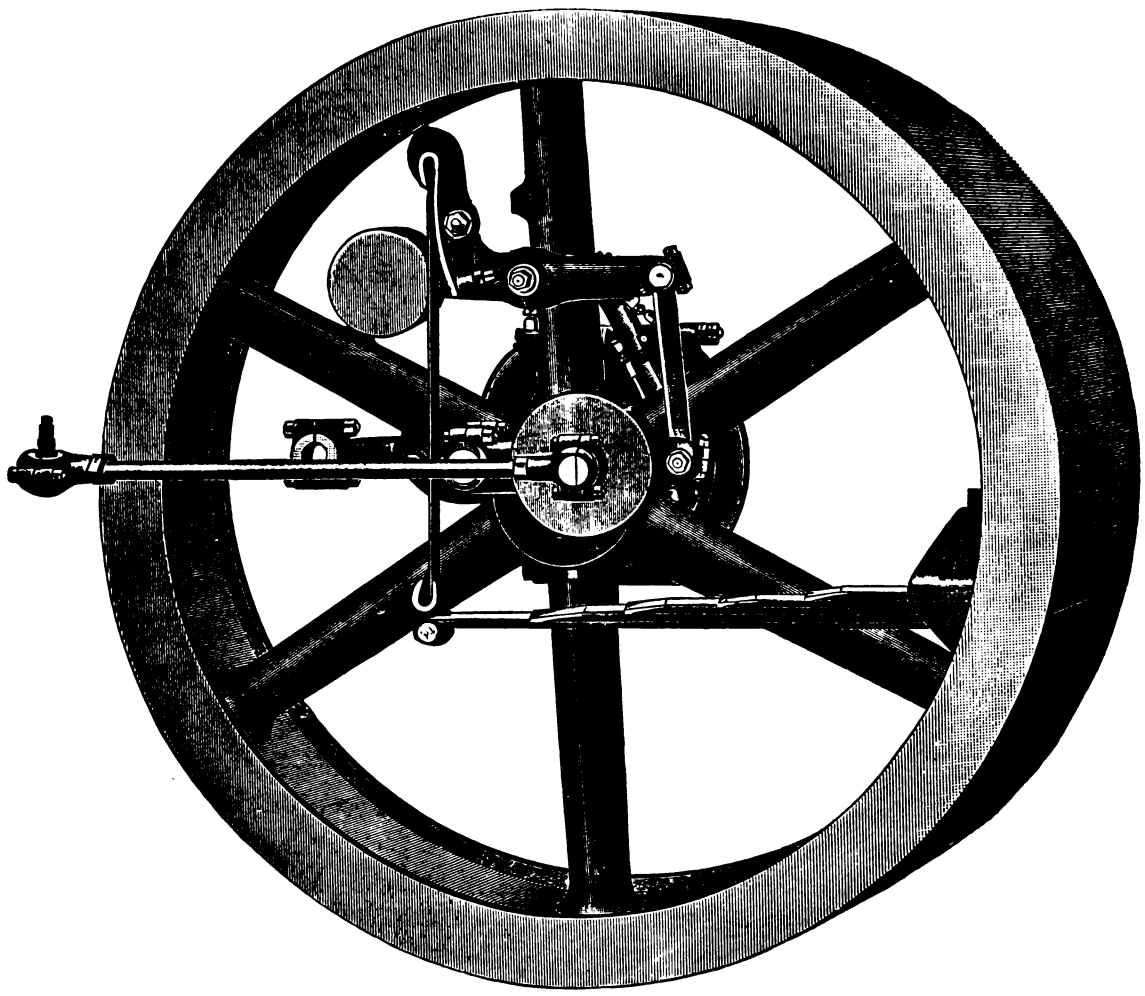

Fig. 3131.

"Referring again to Figs. 3133, 3134, and 3135, let us first investigate the low-pressure cylinder represented in Fig. 3135, as being in some respects the most important one of the system.

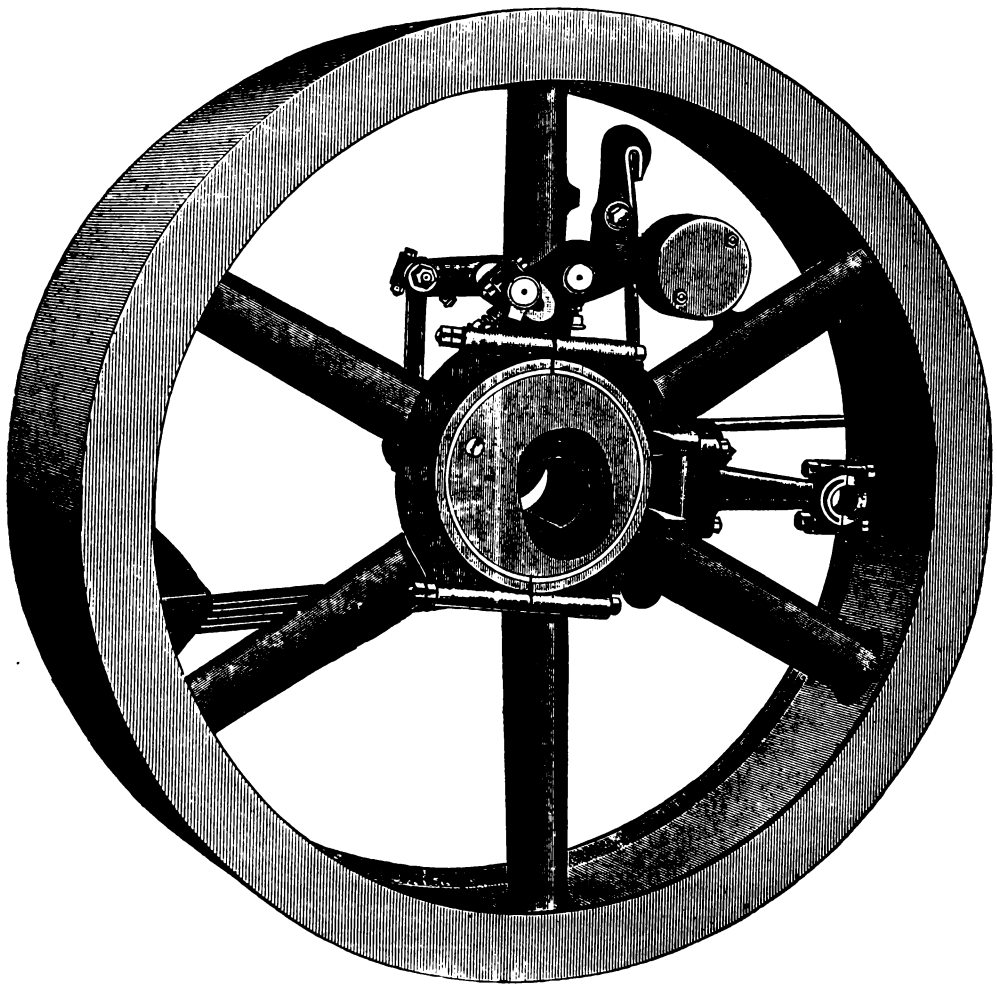

Fig. 3132.

"If 3 lbs. absolute be assumed to be the back pressure in this cylinder, the diagram A B C D represents full and complete expansion, and will correspond with the highest economy of this cylinder if there was no condensation, or if cylinder condensation was a uniform per cent. of the steam used. This diagram, carrying expansion to 3 lbs. absolute, represents a total of more than 53 expansions in the system, which is recognized as being far beyond the economical limit. Following the successive expansion curves from B_1 B_2 B_3 B_4, it will be seen that B_1 adds an area to the useful diagram of .9 inch, or more than ⅓ of the area of A B C D, and the free-expansion loss occasioned by this curve is only 10 per cent. of the useful area that has been realized. This loss is represented by the area of C_1 E_1 C. Substituting curve B_2 C_2 for B_1 C_1, the further addition of useful area is only .78 inch, which is accompanied by an additional free-expansion loss of 29 per cent. of this amount, and in the same manner B_3 C_3 only adds .66 inch of area with a loss of 57 per cent., and finally B_4 C_4 with a useful area of only .56 inch entails a loss of 85 per cent. of this amount in consequent additional free expansion. As between B_3 and B_4 then, it is not likely that an amount of cylinder condensation is ever found in practice that would make it economy to add this last area to the diagram with its enormous free-expansion loss; and the terminal pressure of C_4, representing 22 expansions in the system, is, therefore, probably too high, and we must look for the best results between 22 expansions corresponding to C_4 and 53 expansions due to terminal C.

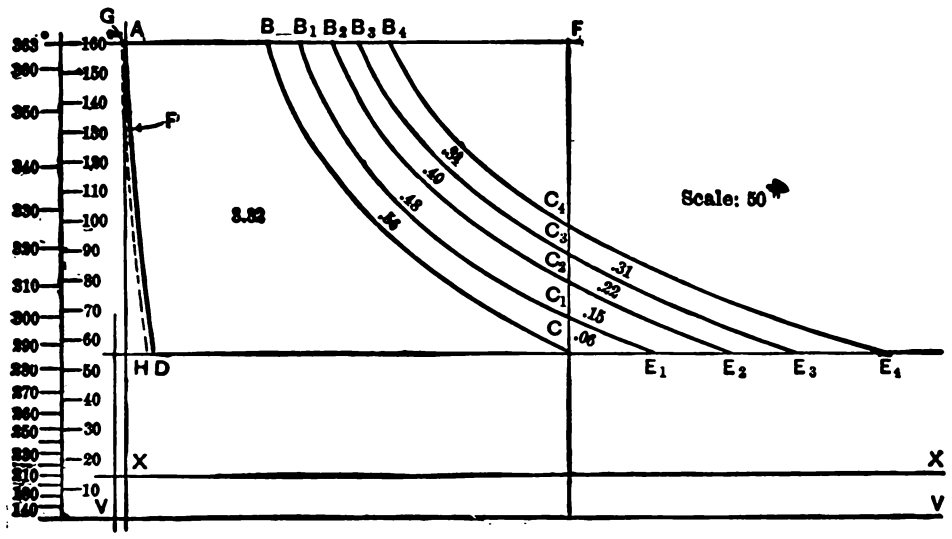

Fig. 3133.

"If the exact amount of cylinder condensation due to each of the five points of cut-off was known, the indicated areas of the diagrams would furnish the data necessary to determine at once the exact point of cut-off where the highest economy would be realized, and just to the extent that we are able to correctly estimate this cylinder condensation will we be able to determine correctly the best number of expansions in each cylinder and in the system. It must be here understood that it is not intended in this paper to determine absolutely the best cylinder ratios or the best number of expansions for the conditions that have been assumed, because of the lack of exact data regarding cylinder condensation, but it is the purpose of the author to show that by this method of investigation even an approximation of the cylinder condensation enables

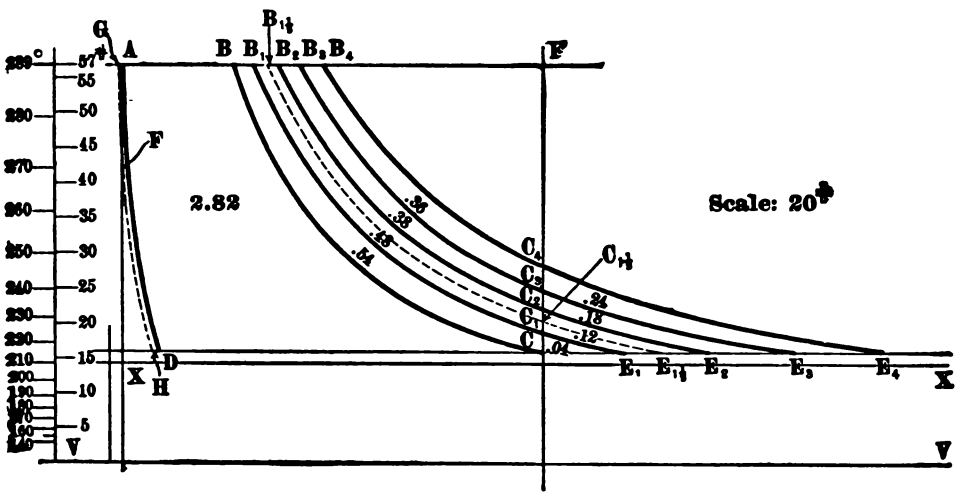

Fig. 3134.

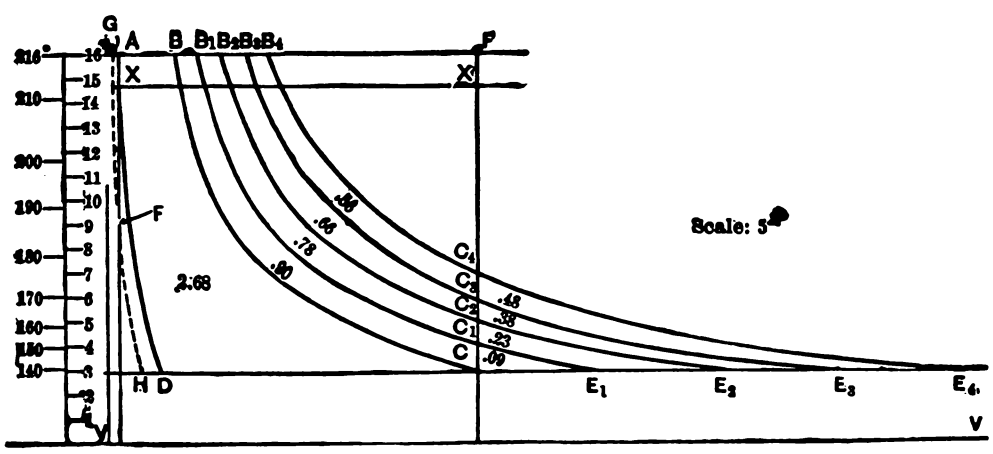

Fig. 3135.

the engineer to decide the question of cylinders with a comparatively small limit of possible error, and this error may be reduced toward zero just in the proportion that the truth regarding cylinder condensation is known. To illustrate the manner of applying this knowledge with the use of the diagrams of Figs. 3133, 3134, and 3135, various amounts of cylinder condensation will be assumed and the problem worked out for each case. Before doing this it may be interesting to note the relatively greater wastefulness of free expansion in the low-pressure cylinder than in the others. Referring to Fig. 3135, the removal of the point of cut-off from B to B_1 adds to the useful diagram the area of $B\ B_4\ C_4\ C\ B$, equal to 2.90 inches. The free expansion of 4 lbs. at C_4 results in a loss of useful work represented by the area of $C_4\ E_4\ C$, equal to 1.18 inches, or about 41 per cent. of the former. Referring to Fig. 3133, representing the high-pressure cylinder, and repeating the same calculation, the area of useful work of $B\ B_4\ C_4\ C\ B$ equals 1.78 inches, and the drop at C of 40 lbs. causes a loss represented by $C_4\ E_4\ C$, equal to .74 inch area, or about 41 per cent. of the useful work in this case also, so that by comparing the two we see that in both cases the useful areas of $B\ B_4\ C_4\ C\ B$ are accompanied by a free-expansion loss of about 41 per cent., but in the low-pressure cylinder the terminal drop is only 4 lbs., as against 40 lbs. in the high cylinder.

"The foregoing ought to furnish food for thought to the engineer who is chiefly concerned about preventing drop in the high and intermediate cylinders.

"Referring again to Fig. 3135, and resuming the consideration of cylinder condensation, let us assume certain quantities to represent this cylinder condensation, and thus illustrate the manner of applying more exact knowledge on this subject. It is evident that the conditions which make late cut-off desirable are large condensation and a constant quantity at every point of cut-off, and the reverse conditions, viz., small condensation, varying for each point of cut-off, would call for early cut-off. In illustrating this subject two rather extreme conditions have been chosen: one where the cylinder condensation is assumed to be 25 per cent. of the steam accounted for by the indicator at latest point of cut-off, and this amount to remain undiminished at the earlier points of cut-off, and the other condition where cylinder condensation is assumed to be only 15 per cent. instead of 25 per cent. as above, and to decrease at each of the earlier points of cut-off in the following manner:

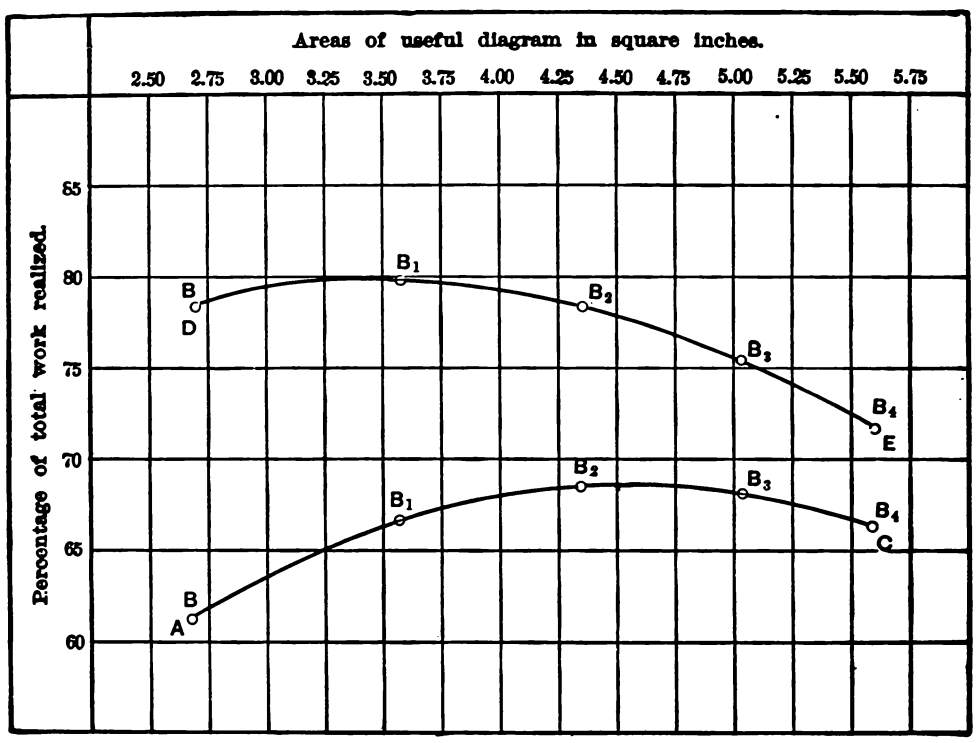

Fig. 3136.

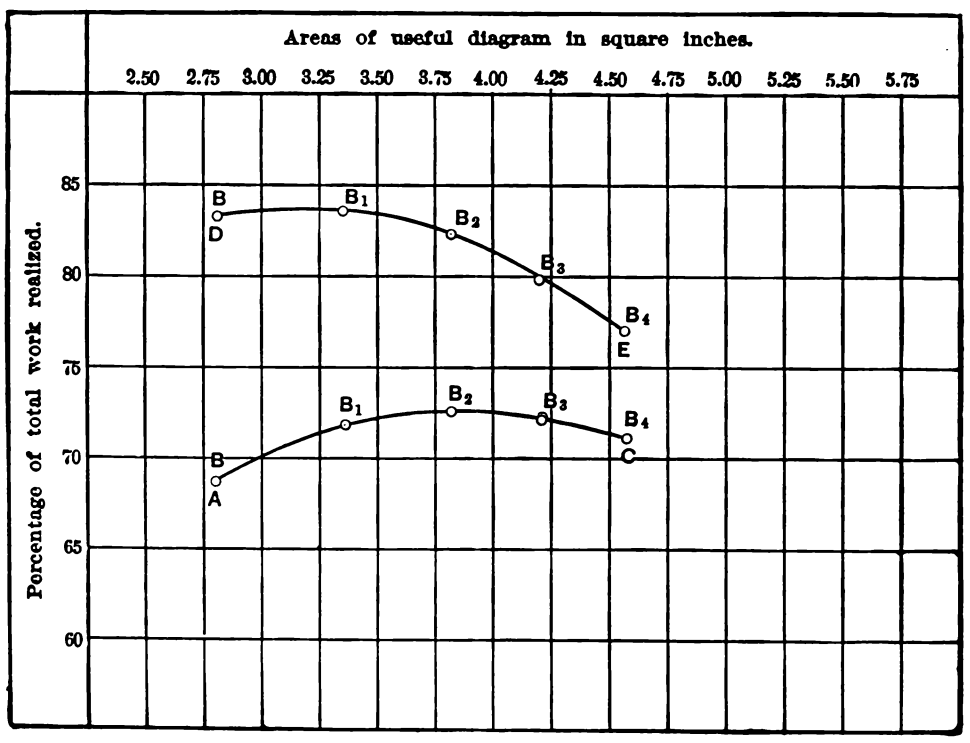

Fig. 3137.

14 per cent.	when	cutting	off	at		B_3
13 "	"	"	"	"	"	B_2
12 "	"	"	"	"	"	B_1
11 "	"	"	"	"	"	B

"Fig. 3136 gives a graphic illustration of the effect on the economy of the low cylinder produced by the two assumed conditions as to

cylinder condensation. Referring to Fig. 3135, the steam accounted for by the indicator at latest point of cut-off may be represented by the area of A B_4 E_4 D A, which equals 6.76 square inches. If the steam condensed on entering the cylinder is 25 per cent. of that accounted for by the indicator at latest point of cut-off, it may be represented by 25 per cent. of the area 6.78 inches = 1.69 inches. This last area, then, under the assumed conditions, will be a constant loss at every point of cut-off. An additional loss by free expansion occurs at every point of cut-off later than B.

"These free-expansion losses are represented by the indicated areas beyond the limits of piston travel, which combined with the area representing condensation, and compared with the areas of useful diagram, produce the curve A C (Fig. 3136) in the following manner. Measurements on abscissa correspond to the useful areas of diagrams at the five points of cut-off indicated. Measurements on ordinates are obtained as follows:

"For cut-off B the area of useful work is 2.68 inches, and the assumed constant loss by condensation of 1.69 inches makes the total area due to the steam consumed equal to 2.68 inches + 1.69 inches = 4.37 inches. Of this amount the area actually realized, 2.68 inches, is 61.3 per cent., which is measured on ordinates and

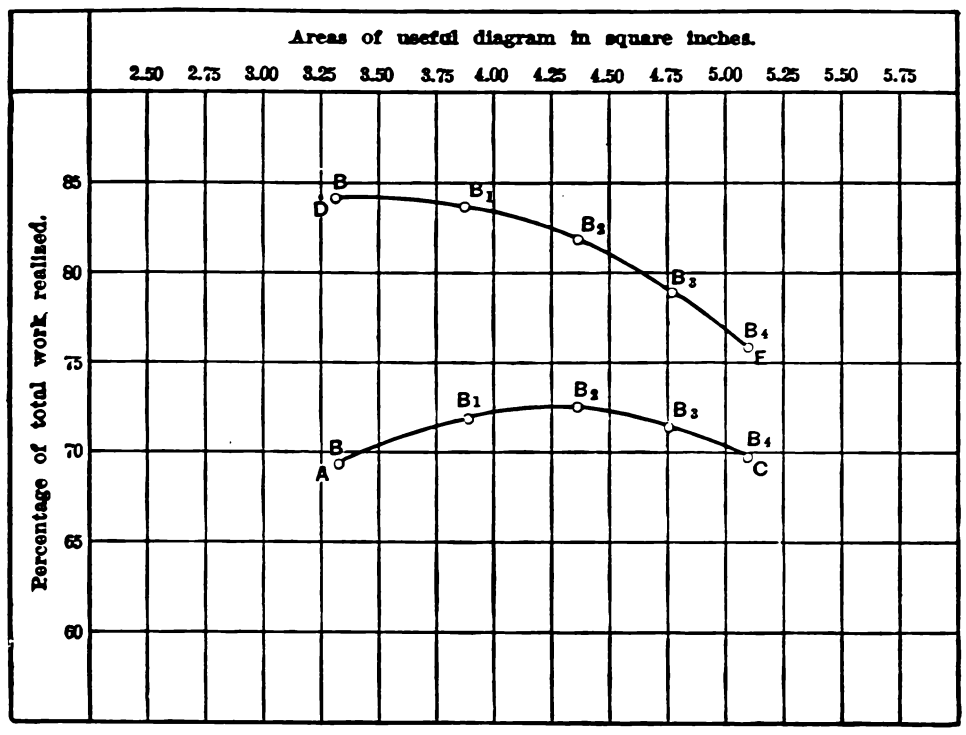

Fig. 3138.

establishes the point B. For cut-off B_1, in the same manner as before, we have useful area of

	Inches.
A B_1 C_1 C D A	3.58
Free expansion of C_1 E_1 C	.09
Assumed condensation	1.69
Total area due to steam used at cut-off B_1 . .	5.36

"Of this area only 3.58 inches has been realized, or 66.7 per cent., which established point B_1 on curve A C (Fig. 3136). The succeeding points on this curve are found by the same process, using the indicated areas at each progressive step.

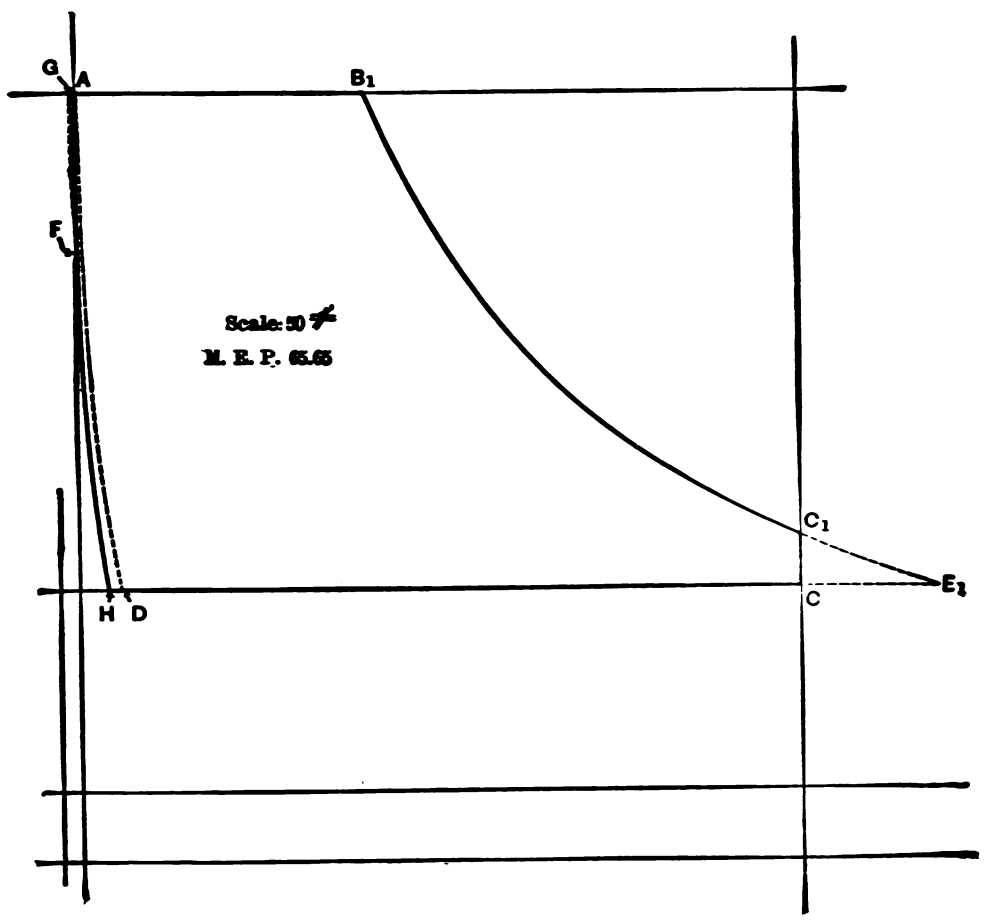

Fig. 3139.

"Curve D E is produced by the same method, the only difference being that the smaller and varying condensation is assumed; thus, instead of the constant area of 1.69 as assumed in curve

A C, the condensation is supposed to be represented by the following areas:

.74 inches for cut-off B.
.81 " " " " B_1.
.88 " " " " B_2.
.95 " " " " B_3.
1.02 " " " " B_4.

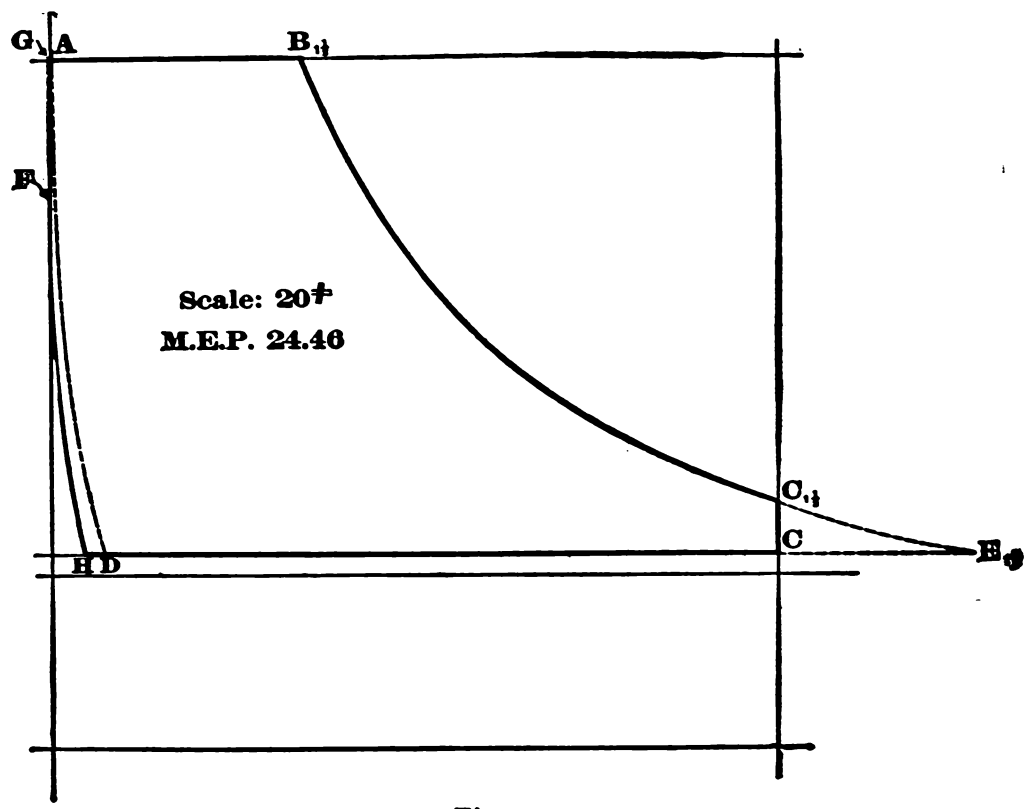

Fig. 3140.

"These quantities are substituted for the constant quantity, 1.69 inches, used with curve A C, and the result is curve D E.

"From an examination of these curves it appears that with the conditions assumed for curve A C the highest economy is obtained at or near cut-off B_2, while with the conditions which produce curve D E, the highest economy is found at or near cut-off B_1.

"If the condensation assumed for either of these curves was known to be correct, then the best point of cut-off would at once appear; but even without exact knowledge as to condensation, the range covered between the two assumed conditions is so great that the actual condensation would probably produce a curve between the two, and if so, then the terminal pressure at release in low-pressure cylinder of the proposed engine should not be less than 4 lbs. absolute, nor more than 5 lbs., and the corresponding number of expansions of the system will not be more than 40 nor less than 32. For the purpose of keeping the low-pressure cylinder as small as possible, the fewest number of expansions should be employed that promises approximately the best economy, and therefore we will select 32 expansions, and the expansion curve in low-pressure cylinder will be B_2 C_2.

"Referring to Fig. 3136, the lower curve assumes the greatest cylinder condensation, and on this assumption B_2 appears to be the best point of cut-off. The condensation here assumed, if referred to the area of A B_2 C_2 C D, will be found to equal 47 per cent. of the steam accounted for by the indicator when cutting off at B_2, which, in view of the cut-off being later than ½ stroke and the total range of pressure in the cylinder only 15 lbs., is an altogether improbable amount. It is also equally improba-

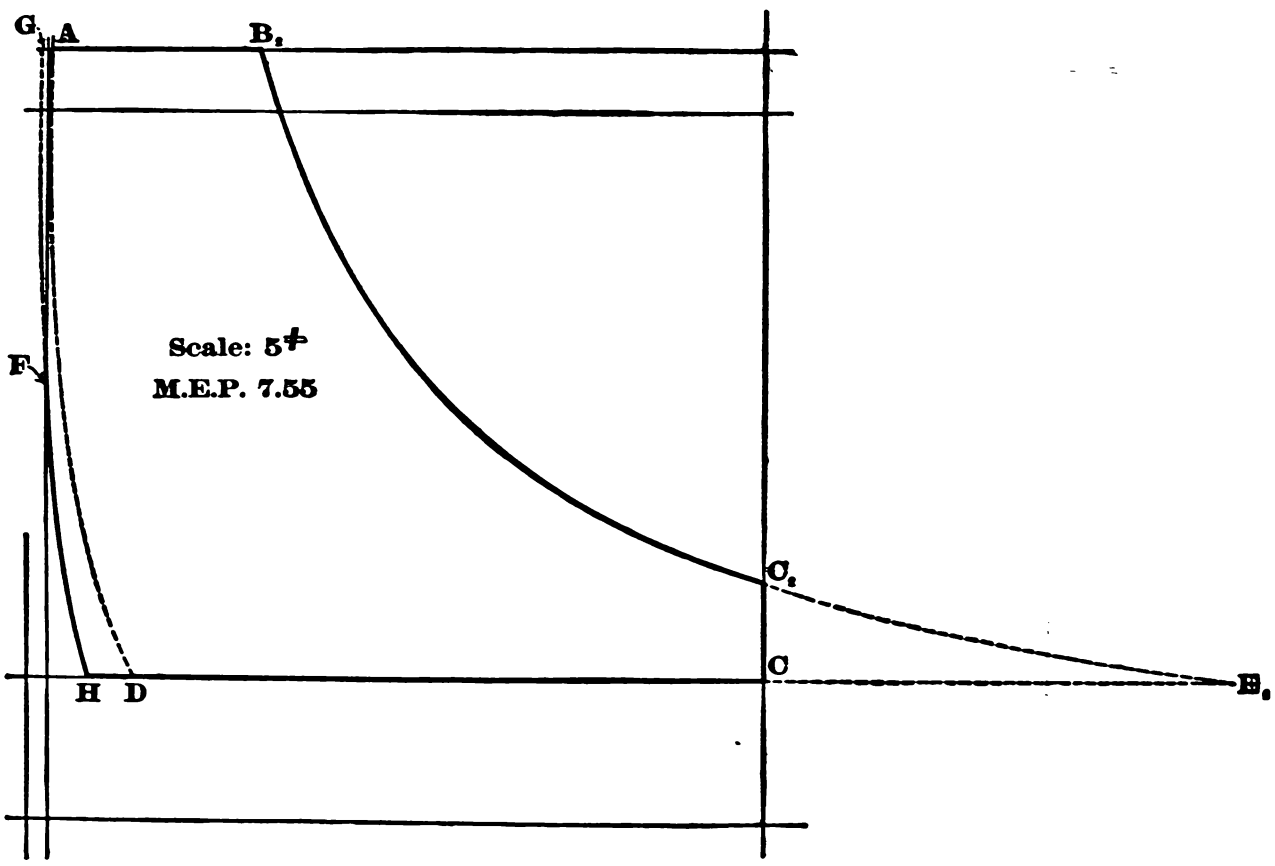

Fig. 3141.

ble that the actual loss by condensation would not decrease slightly with earlier points of cut-off, so that in selecting 32 expansions for the proposed engine, it is done with the idea of using the least permissible number that will even approximate the best economy. Having determined that 32 expansions will be obtained in the proposed engine, and that A B_2 C_2 C D of Fig. 3135 will be the diagram of low-pressure cylinder, we will next proceed to investigate the intermediate and high-pressure cylinders.

"Beginning with the intermediate, Fig. 3134 represents a series of possible diagrams between the pressures that have been allotted to this cylinder, and Fig. 3137 represents the economy of each of these points of cut-off under the two extreme conditions of condensation that were assumed in Fig. 3136. The method of locating the points on the curves of Fig. 3137 is exactly the same as that of Fig. 3136, merely substituting the areas of Fig. 3134 for those of Fig. 3135, and need not be again explained. Following the curves of Fig. 3137, it appears that for the smallest condensation the best economy is at or near cut-off B_1, while with the largest condensation the best result is with cut-off somewhat later than B_2. Between these points, then, we must probably look for the desired point of cut-off, and, as before stated, if the exact condensation for each point was known it could be very quickly determined. As between this cylinder and the low we may assume that the condensation will be somewhat less in the smaller cylinder because of its smaller area of surface. This would be favorable to earlier cut-off, and the practical limitations as to size of cylinder do not interfere, as is the case of the low cylinder. On the other hand, free expansion is not a total loss in either the high or intermediate cylinder, as its superheating effect reëvaporates a certain quantity of the moisture in the steam, thus delivering to the receiver an appreciably greater volume of steam than that accounted for by the indicator at exhaust opening if much 'drop' occurs. For this reason, 'drop' is less objectionable in these cylinders than in the low, where no such redeeming feature is found. After due consideration of these modifying influences, it is not improbable that about midway between B_1 and B_2 will approximate the best point of cut-off for this cylinder, and to continue the illustration of the proposed method, the dotted curve $B_1\frac{1}{2}$ $C_1\frac{1}{2}$ will be selected as the desired curve.

"Proceeding in the same manner with Fig. 3133, representing the high-pressure cylinder, and what has just been said about the intermediate cylinder applies to this equally as well. From a study of the curves of Fig. 3138 as representing the performance of the high-pressure cylinder at the various points of cut-off under the same conditions as to condensation that were assumed in Figs. 3136 and 3137, and keeping in mind that, unlike the low cylinder, no practical difficulty exists as to its size, we may with confidence select B_1 as a point of cut-off that promises approximately the best results that may be obtained from this cylinder.

"We have now established the expansion curves that we desire to produce in each cylinder, and to prevent confusion Figs. 3139, 3140, and 3141 represent diagrams from the three cylinders, in which only the desired expansion curves appear.

"So far, in this investigation, no attention has been paid to the compression curves further than to state at the beginning that the compression curves shown are full compression curves which entirely fill the clearance spaces by compression, and rise without interruption to the initial pressure of the diagrams. Under no condition can these curves be the most economical, unless it has been shown that the best economy is obtained by expanding fully to the line of back pressure, as B C (Figs. 3133, 3134, and 3135). Following the law relating to compression curves, suggested in Vol. XIV. of the 'Transactions of the American Society of Mechanical Engineers,' page 1070, the curves H F have been produced as the compression curves in each case that correspond with the expansion curves that have been adopted. The completed diagrams, then, as sought to be produced, are represented by full lines in Figs. 3139, 3140, and 3141. The next step is to ascertain the ratio of cylinders which will produce these respective diagrams, and to do this the diagrams must be compared as to the relative volumes of steam which they indicate. A very convenient graphical method for doing this is the following: *

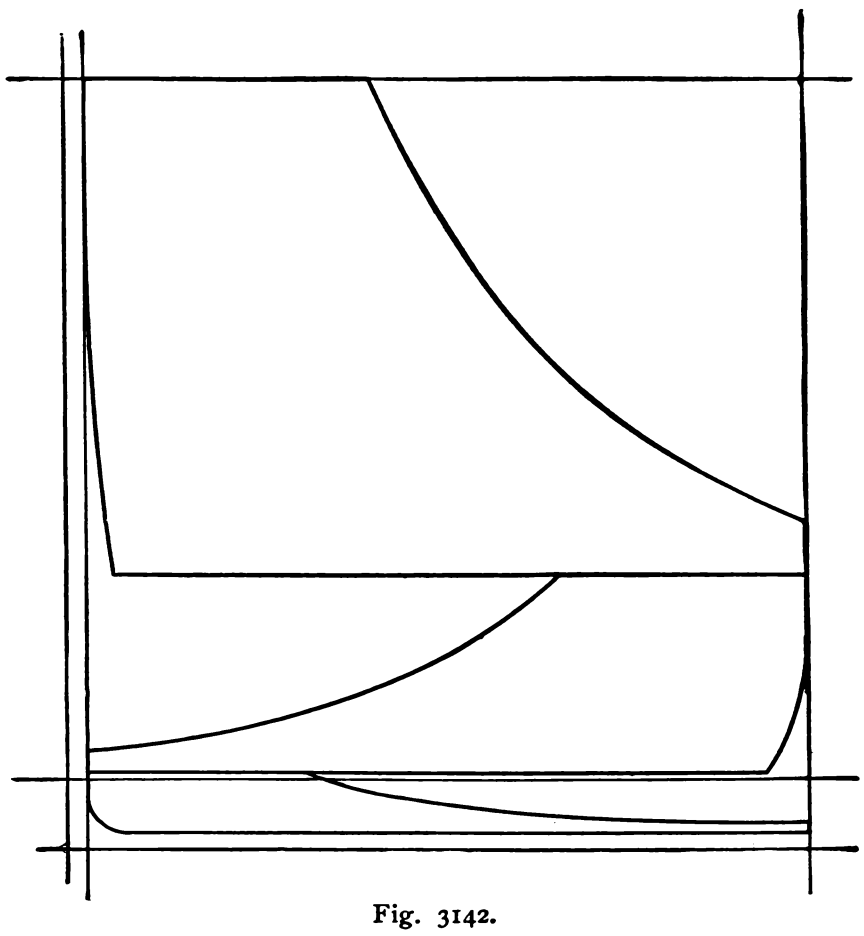

Fig. 3142.

"First, continue the compression curves H F of Figs. 3140 and 3141 to the line of highest pressure of each diagram, as shown.

"Next continue the expansion curves of Figs. 3140 and 3141 to the intersection of the line of lowest pressure of each diagram, as shown.

"Assuming that the lengths of these diagrams representing the piston travel are the same, and that the line G B_2 in Fig. 3141 represents the same pressure as the line H $E_1\frac{1}{2}$ (Fig. 3140), it is only necessary to compare the length of the line G B_2 with H $E_1\frac{1}{2}$, and the inverse ratio will be the ratio sought. Thus, in this case, the line, G B_2, measured with a scale of 100 to the inch,

* The author is indebted to his son, B. C. Ball, member of the class of '95 at Stevens Institute of Technology, for this method, which is believed to have been original with him.—F. H. B.

measures 92, and in the same manner H $E_{1\frac{1}{2}}$ measures 368; therefore the ratio of the intermediate to low cylinder will be $\frac{368}{92} = 4$.

"By the same method G $B_{1\frac{1}{2}}$ (Fig. 3140) measures 104 and H E_1 (Fig. 3139) = 342, and therefore the ratio of high to intermediate cylinders will be $\frac{343}{104} = 3.3$.

"Reviewing these figures, we have the ratio of high to intermediate 3.3, and of intermediate to low 4, and consequently of high to low 13.2.

"It sometimes may be more convenient, in measuring cylinder ratios by the method just described, to extend both the compression and expansion curves of the lower diagram upward to the line of terminal pressure of the next higher diagram, and use this line for measuring the ratios. The result will be the same in either case.

"If these ratios are used, and the valves of each cylinder are set to give the steam distribution indicated, the actual diagrams from the engine will approximate very closely to those of Figs. 3139, 3140, and 3141, except as they may be slightly modified by cylinder condensation. Where steam-jackets are used, the loss by cylinder condensation after cut-off in high-pressure cylinder is largely restored by heat from the jackets, so that frequently no allowance need be made in the ratios of cylinders for this loss.

"With unjacketed cylinders a progressive deficiency will appear in each successive diagram of the system as compared with the theoretical diagrams, unless an allowance is made in the cylinder ratios to compensate for the progressive loss occasioned by condensation in the cylinders.

"Continuing the study of the diagrams of Figs. 3139, 3140, and 3141, the same diagrams appear in Fig. 3142, reduced to the scale of the high-pressure diagram, and in Fig. 3143 they are reduced in length to correspond with the respective cylinder ratios, thus representing the total expansion referred to the low-pressure cylinder.

"The mean effective pressures of these diagrams are as follows:

	Lbs.
High cylinder	65.65
Intermediate cylinder	24.46
Low cylinder	7.55

"Or, referred to the low cylinder, as follows:

	Lbs.
High cylinder	4.96
Intermediate cylinder	6.10
Low cylinder	7.55
Total	18.61

"These figures show a progressive increase of indicated work in each cylinder from the high to the low.

"A more even division of work would be obtained by decreasing the range of pressure in the low cylinder and increasing the range in the high. It has already been suggested, that because of the relatively larger area of surface of the low cylinder, a modification of this kind would probably reduce the total condensation; therefore it seems desirable that such a modification should be made, but the work will not here be reviewed for that purpose.

"GENERAL CONCLUSIONS.—First, that in current engineering too few expansions are obtained in compound engines for best economy.

"Second, that with 150 lbs. pressure and a good vacuum, at least 32 expansions should be realized in a triple-expansion engine.

"Third, that the cylinder ratios ordinarily used are too small, because they give too little 'terminal drop' in the high and intermediate cylinder for best economy.

"Fourth, that too little attention is given to the compression curve, which should be determined by the expansion curve, and should never reach initial pressure.

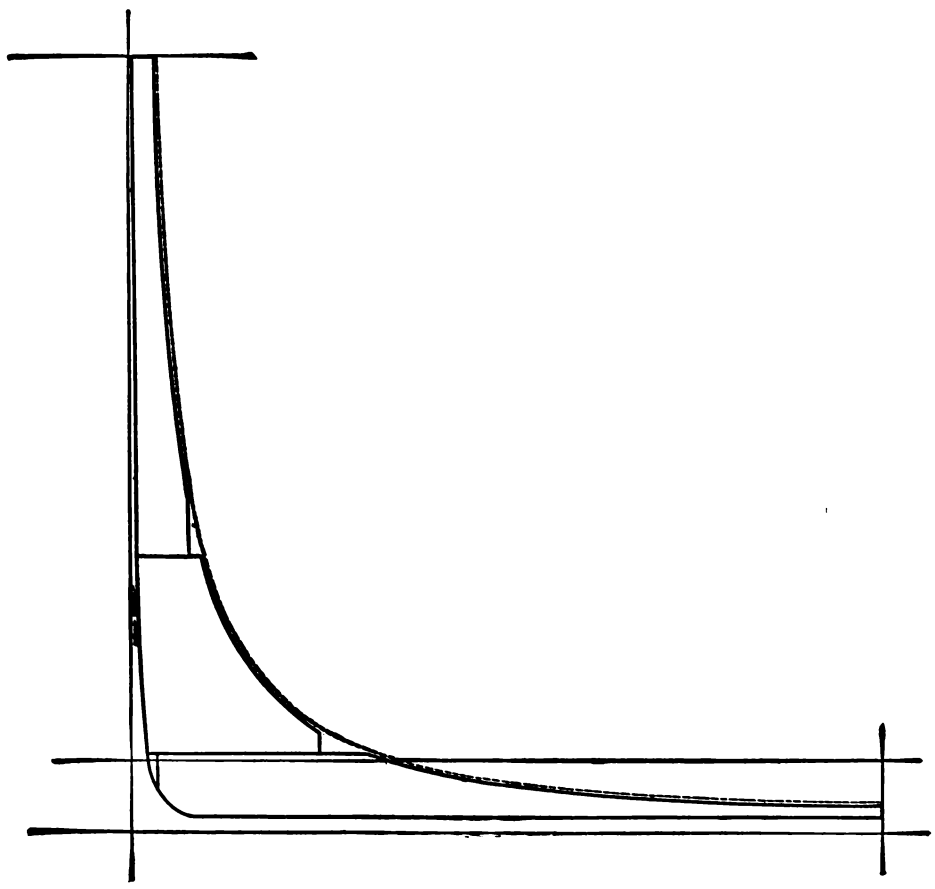

Fig. 3143.

"The foregoing is submitted with full knowledge that the conclusions may not be generally accepted because of a very commendable disposition on the part of the members of our Society to take more kindly to demonstrated facts than to theory, even of the most plausible kind.

"While waiting for the verdict of future experiments the author will still further risk his engineering reputation (if he has any) by venturing the prediction, that, when under the conditions assumed in the foregoing pages as to boiler pressure and vacuum, a triple-expansion engine shall be provided with cylinders proportioned to produce approximately to final diagrams of the series in respect to the number of expansions, the terminal drop, and the compression curves, or such slight modification of them as may be suggested by the line of reasoning that has been followed, then a horse-power will be developed from 11 lbs. of steam per hour."

A high-speed engine constructed under Raworth's patent by the Brush Electric Light Co. is shown in the following illustrations.*

Figs. 3144 and 3145 show two sections through the new engine at right angles to each other. The first thing that strikes the eye is the absence of slide or piston valves, and the use in lieu thereof of Corliss valves, placed between the high and low-pressure cylinders, there being separate valves for inlet and exhaust. As far as our knowledge goes, this is the first time that such valves have

* From *Engineering*.

been in this position, although it is difficult to understand why it is that their undoubted merits have never been made available in this type of engine before. As here employed, they afford the essential feature of short and direct steam passages, thus insuring that the clearance space shall be a very small proportion of the cylinder volume.

A cursory examination of the engravings shows that the steam acts on one side only of each piston, being admitted first to the under side of the high-pressure piston, and then transferred to the upper side of the low-pressure piston. The bottom of the low-pressure piston is always open to the exhaust, while the upper portion of the high-pressure cylinder is in free communication with the receiver, except for a short time when the crank is near the upper end of its travel. Each cylinder has in its wall a ring of holes, which acts as a supplementary exhaust port. The upper holes, however, pass very little steam, because the pressure in the cylinder when they are opened is practically the same as that in the receiver, as will be seen by an inspection of the diagrams.

In Fig. 3156, as shown, the "drop" between the two diagrams is exceedingly small, a feature which contributes materially to the economical working of the engine. The lower ring of holes serves to drain the water out of the low-pressure cylinder; and to render this operation the more certain, the upper face of the piston is conical, so that it may be swept clean by the outgoing current of steam.

The mechanical details show signs of novelty in almost every part. The piston rod is incased in cast-iron sleeves, which may be expected to wear to a high polish without scoring. These sleeves act also as distance pieces between the pistons, and when the nut at the bottom end of the rod is taken off, the rod can be drawn off through both pistons. To facilitate this operation, the nut is made in halves, fitting into a conical recess in the cross-head. If the nut at the upper end of the rod is removed, and the rod dropped a few inches, the lower nut will fall apart, and then the rod can be drawn upwards. The connecting rod is composed of two tie-rods and a central hollow strut, the length of which can be rapidly adjusted to take up wear of the brasses. This strut is made in two main parts united by a screw of large diameter and considerable length. This screw, Fig. 3157, can be turned by means of "tommy holes" formed in a collar about its centre. The female screw into which it takes is split, and can be tightened on to it, so as to render the connection absolutely rigid, by bolts which clamp the two halves of the nut firmly together at their ends.

The crosshead, Figs. 3147 and 3148, carries a hollow pin which can be slipped in and out quite freely, when it is necessary to attend

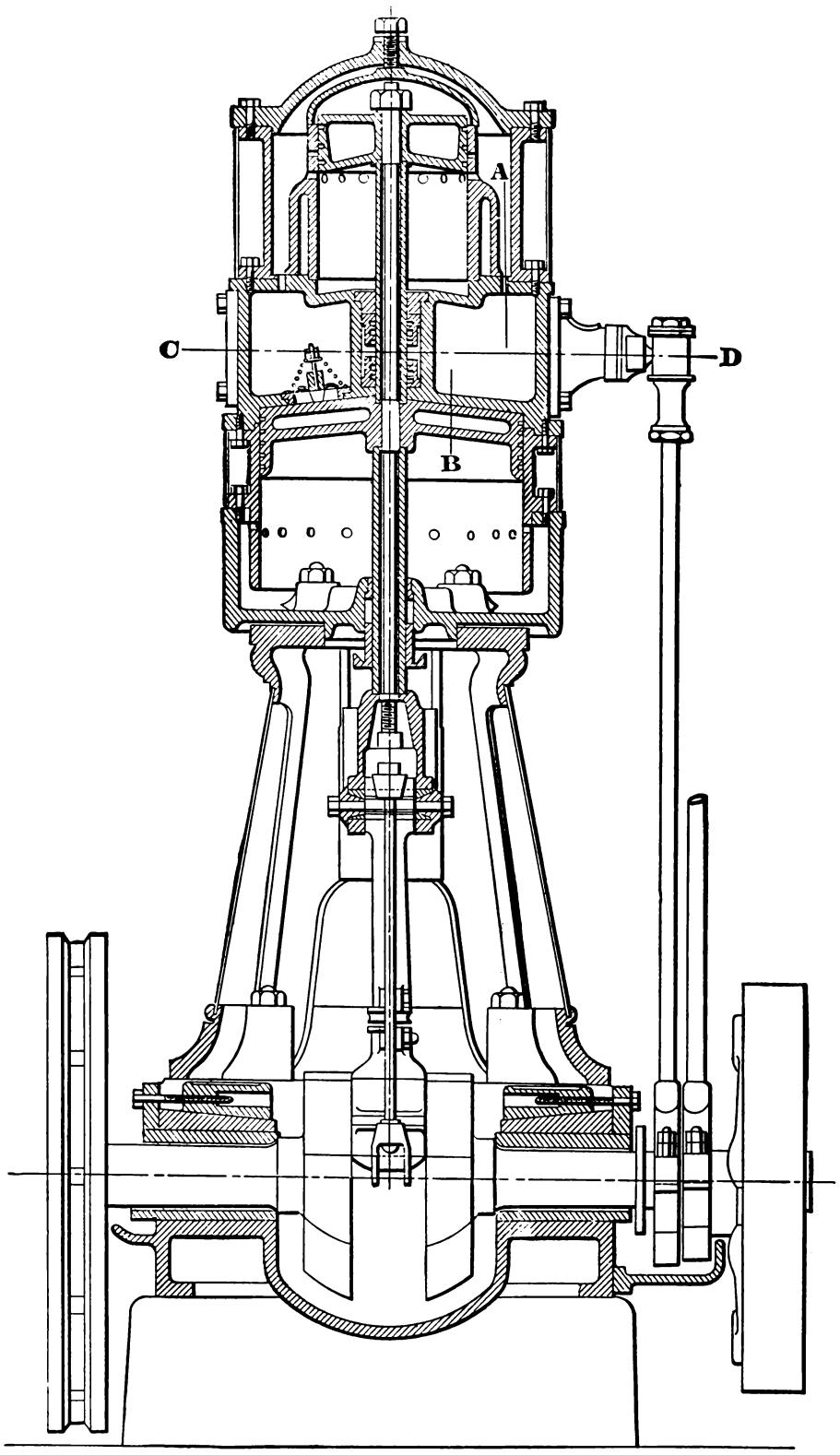

Fig. 3144.

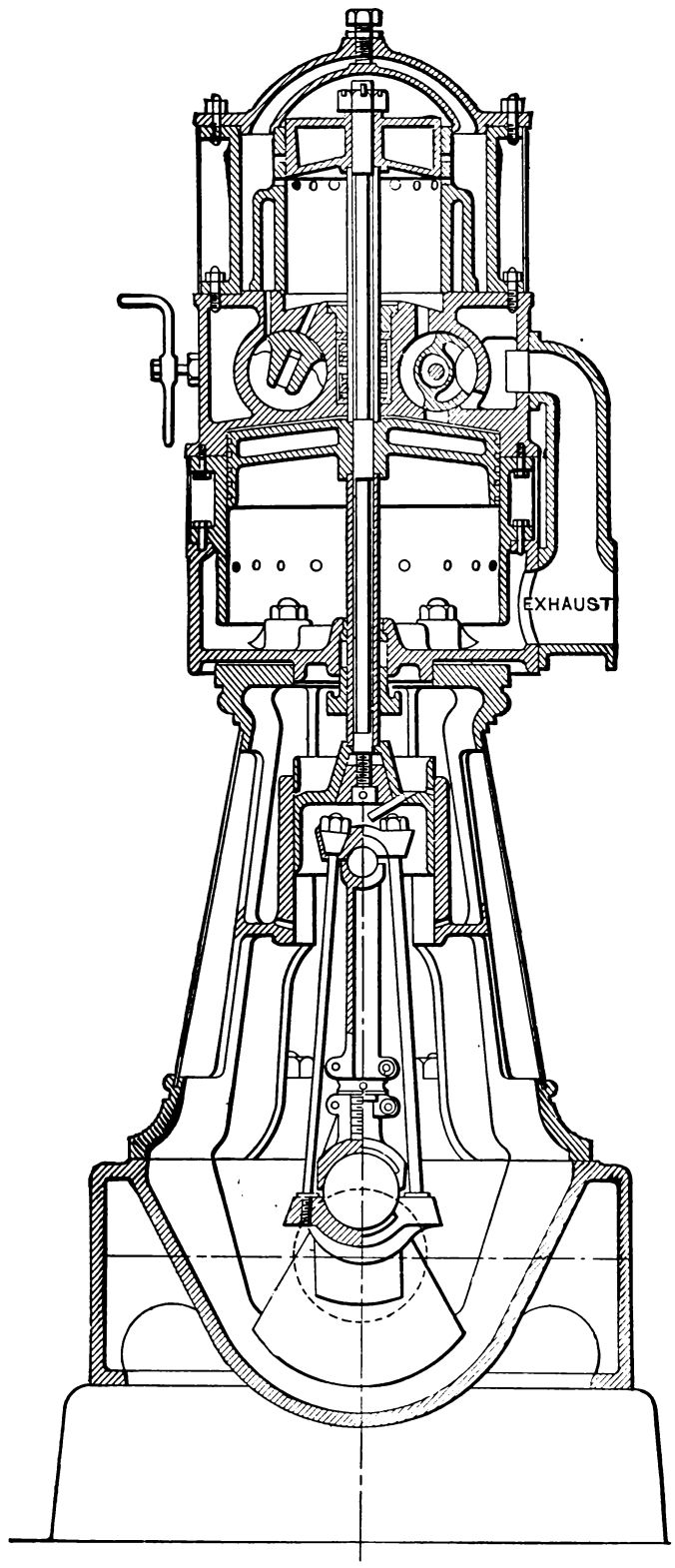

Fig. 3145.

to it. To render this pin secure in working, the ends are split, and are fitted with internal tapered stoppers. By forcing these stoppers inward by means of the bolt which connects them, the ends of the pin are expanded, and take a firm bearing in the horns of the crosshead. The main bearings, Figs. 3149 and 3150, are set in seats in the framing, Fig. 3144. The top step is held down by a wedge-piece drawn up by an external screw, while two studs, Fig. 3150, provide an end adjustment for the brasses. Figs. 3151 and 3151*a* show a loose frame for tightening up the gland of the low-pressure cylinder without putting any cross-wind on it. Figs. 3152 and 3152*a* show the upper end of the eccentric rod, which takes hold of a spherical pin on the arm at the end of the valve. The bearing is set up by screwing in the cap at the end of the rod.

Having thus dealt briefly with the mechanical features of the engine, we will trace the course of the steam through the valves and cylinders. The high-pressure steam enters through the left-hand valve case, Figs. 3145, 3153, and 3153*a*, and thence goes direct to the high-pressure cylinder through the short port shown. It is cut off at some point between ⅝ stroke and zero, and then expands during the remainder of the stroke. When the piston passes the ring of holes, the cylinder and receiver are put in communication, but there is not a great difference of pressure between them. To insure that this will be the case, there is a very small port leading from the valve case into the receiver, and when the valve is making its full stroke—that is, when the engine is running below its normal speed—this port is momentarily opened each stroke. At other times the stroke of the valve is not long enough to open the port. When the upward stroke of the pistons is complete, the right-hand valve puts the low-pressure cylinder into communication with both the high-pressure cylinder and the receiver. The communication between the two cylinders is clearly shown in Fig. 3145, and that between the receiver and the lower cylinder can be followed in Figs. 3153 and 3153*a*. Steam is cut off in the low-pressure cylinder at about ½ stroke, and then expands till the ring of holes is opened to the exhaust. After cut-off in the low-pressure cylinder, the remaining steam below the high-pressure piston finds its way through its right-hand valve case and the chamber between the two valves, Fig. 3153*a*, into the receiver, passing through that into the upper part of the cylinder, the combined capacity of the two not altering, and there being no material change of pressure in the receiver during this part of the stroke. It is only during the upstroke of the pistons that the pressure in the receiver rises as shown by the diagram, Fig. 3156. It falls on the downstroke to the point of cut-off, and after that remains practically constant. There is a small amount of negative work done in the receiver due to friction, radiation, etc.

The high-pressure valve is operated by an eccentric under the control of a shaft governor, while the low-pressure valve is worked by an eccentric with a fixed stroke. The governor, Figs. 3154 and 3154*a*, is the outcome of a large number of experiments made to arrive at a design which gives a firm control of the valve under all conditions, and which will stand the wear and tear to which it is subjected. When it is desirable to alter the speed of the dynamo during the run, the governor is fitted with a Raworth's speeder gear, illustrated in Fig. 3155, by which the tension of a spring can be regulated without stopping the engine. It is the supplementary spring shown that is regulated. One end of it is attached to an eccentric strap fitted to an eccentric loose on its axis. This eccentric has a spurwheel attached to it, and beside it is another spurwheel fast on the shaft. A fixed frame carries two pairs of differential pinions, and this frame can be moved to put either pair of wheels in gear with the wheel on the shaft, and to transmit the motion to the wheel on the eccentric. By this means the eccentric, which is not the main eccentric, but merely a device for tightening or slackening the supplementary spring, can be rotated in either direction relatively to the governor disk.

The progress of this new engine will be watched with great interest. The originality displayed in its design must command the attention of mechanics, who will recognize that while the details are full of novelty, there is nothing in the main features that has not already, in some other shape, survived the test of experience. The good working of Corliss valves is proverbial, while economies of the very first order have been obtained by their use. The one inaccessible gland between the cylinders consists only of a pair of sleeves, pushed apart by a spring and grooved internally, and can give no trouble. The cylinders are all lathe work, and must go together absolutely in line. The drainage is

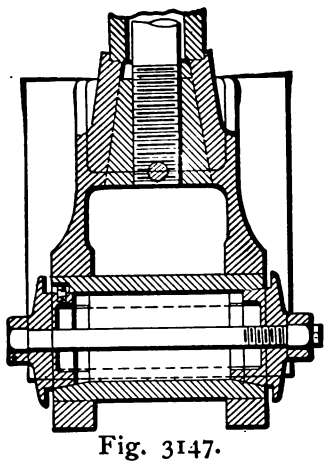
Fig. 3147.

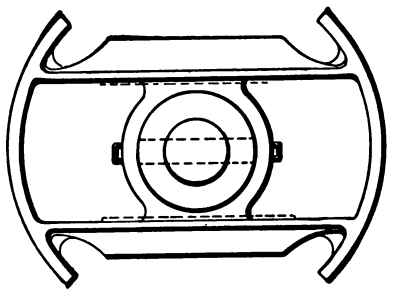
Fig. 3148.

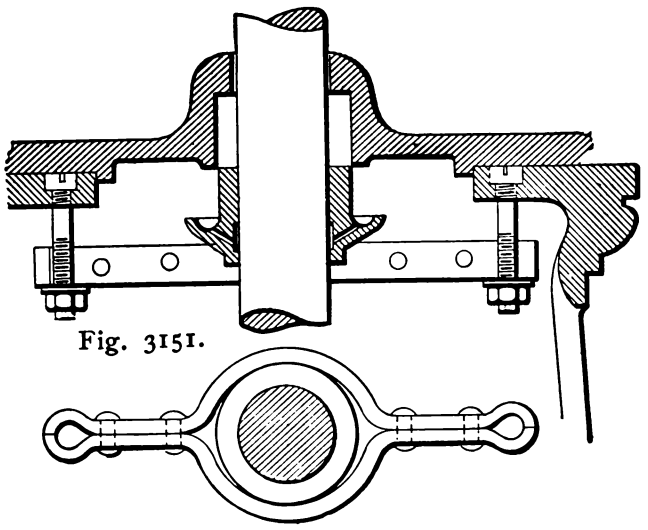
Fig. 3151.

Fig. 3151*a*.

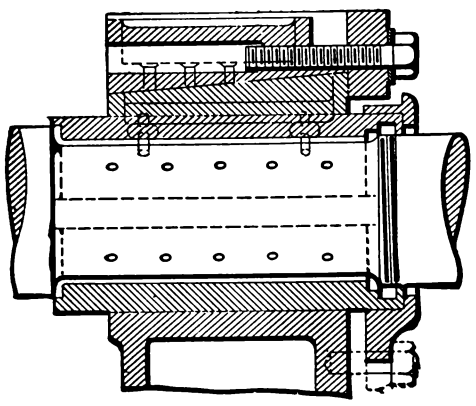
Fig. 3149.

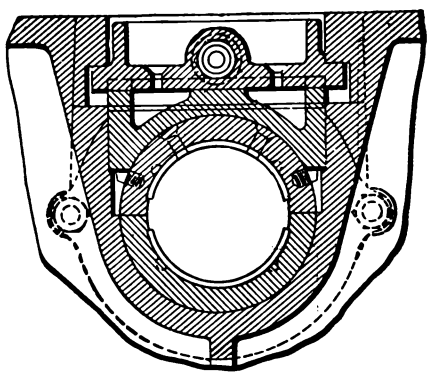
Fig. 3150.

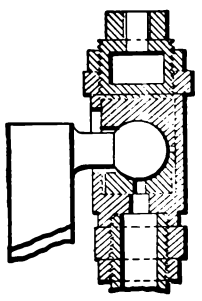
Fig. 3152.

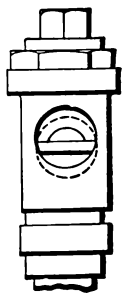
Fig. 3152*a*.

so completely automatic that cylinder cocks are not fitted, and there is only one relief valve. The connecting rod, Fig. 3157, although somewhat open to criticism, is more novel in appearance than in reality. As regards this and other details, the leading idea has evidently been to render every part capable of being handled and adjusted by a mechanic of limited ability, so that minor repairs may be made without calling in outside assistance. The lubricating arrangements, of which we have not spoken, display the same care to render unnecessary the presence of highly skilled attendants. A simple form of rotary pump delivers oil in a copious stream to the upper part of the engine, whence it runs in abundance through all the working parts, except the cylinders, which are fed from a displacement lubricator of very large capacity.

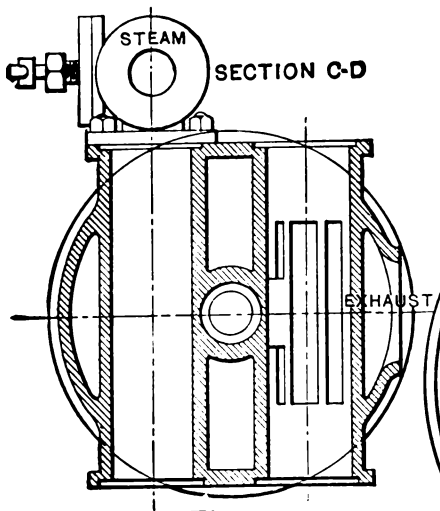

Fig. 3153.

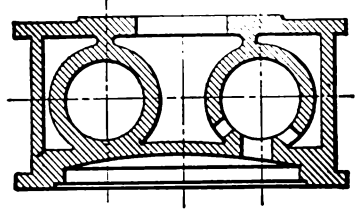

Fig. 3153*a*.

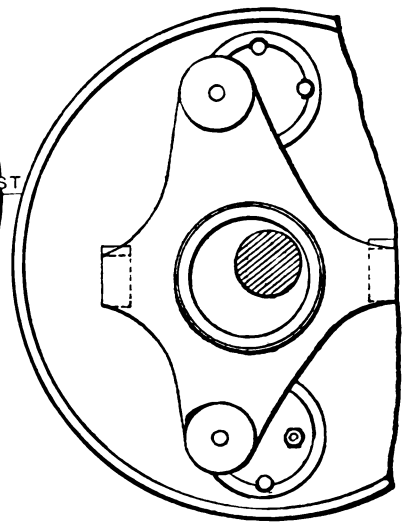

Fig. 3154.

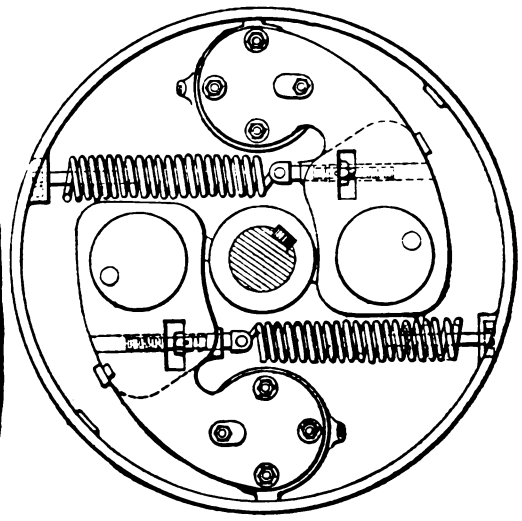

Fig. 3154*a*.

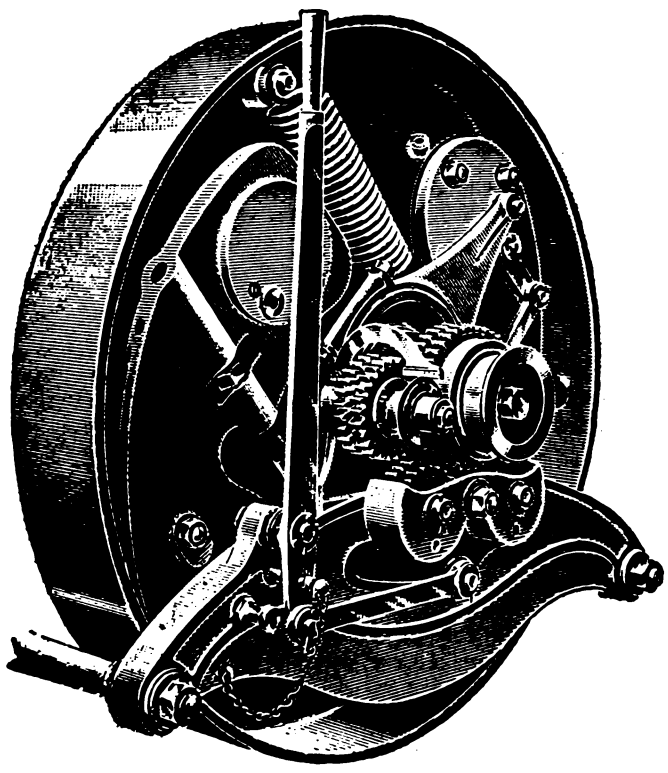

Fig. 3155.

THE WILLANS CENTRAL VALVE ENGINE, shown in Figs. 3158 to 3161, constructed in the United States by the M. C. Bullock Manufacturing Company, of Chicago, Ill., and in England by Willans & Robinson, of Rugby, is a vertical engine having a shaft governor operating a piston throttle valve.

The distinctive features of the engine are that it is strictly a high-speed engine, its piston speed being 500 feet per minute, and that the piston rod is hollow, and the piston valves for all the cylinders, whether compound, triple, or expansion, are strung upon one valve rod operated by a single fixed eccentric, as seen in Fig. 3158, where, on the right, cylinders are shown in section; whereas, on the left, the cylinders and valve ports are shown in section, exposing the valves to view. Fig. 3159 shows the valve rod removed from the engine, which takes steam from the steam chest at the top, each cylinder exhausting direct into the cylinder below it through the ports provided in the circumference of the piston rod; hence the upper parts of the intermediate-pressure and low-pressure cylinders are, in effect, receivers, and there is no loss of heat through the passage of the steam through pipes or passages from one cylinder to another. The pistons and piston valves all working vertically, the wear of the parts is reduced to a minimum, while lubrication and drainage are effected under the most favorable conditions.

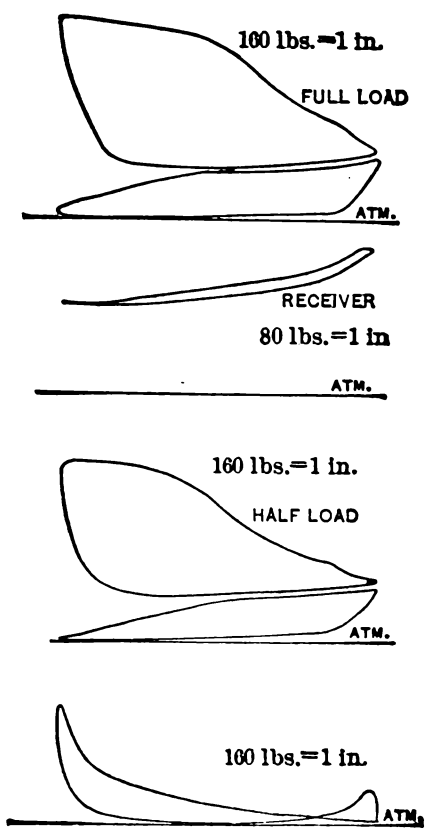

Fig 3156.

The construction of the engine is so simple that the following short description will suffice:

Fig. 3158 represents a standard pattern of engine having 14-inch low-pressure cylinders, that may be used as a simple, compound, or a triple-expansion engine. The various parts are so lettered and numbered in the figure as to adapt the description to either form.

The right-hand line of pistons, with the hollow piston rod, is shown in elevation; the left-hand line in section, with the piston valves in elevation. Fig. 3159 is a separate sectional view of one line of valves. In the right-hand line of pistons, which is upon the up stroke, the course of the exhaust steam is indicated by arrows, but the piston valves are necessarily invisible.

In the triple-expansion form of these engines, what is usually called the "intermediate cylinder" is called the "high-pressure" or HP. cylinder, because it is merely the HP. cylinder of the compound form of the same engine "tripled" by adding a still smaller cylinder above it; the latter is called the "H.HP." cylinder. These are merely shop terms, intended for the convenience of makers, not of users; but they are so convenient, and so expressive of the system upon which the engine is designed and built up, that they are introduced in the diagram.

It will be noticed that a compound, or even a triple-expansion engine, may be run as a simple engine without removing the upper cylinders, by merely removing the upper pistons, and the piston valves corresponding with them; in fact, either the steam pistons or the valves might be left, were it not for the useless friction of the rings; the upper cylinders, in such a case, become mere extensions of the steam chest. It is sometimes a practical convenience to be able thus easily to alter a compound to a simple engine, or a triple-expansion to a compound. Starting with a simple engine, Fig. 3159*a*, the steam passes into the cylinder through slots in the hollow piston rod R, which moves steam-tight through the gland C^3 in the cylinder top, which forms also the bottom of the steam chest (or receiver, if the engine be afterwards compounded).

Referring to the left-hand line of pistons, which has completed one-fourth of the down stroke, it is seen that steam is entering the piston rod or "trunk" by the ports 7, 7, and passing out again into the cylinder by the ports 8, 8. At about three-quarters stroke the piston valve V^8 will close the last-named ports, but cut-off will take place earlier than this by the ports 7, 7, entering the gland C^3, and so leaving the steam chest. The point in the stroke at which cut-off takes place is governed by the height above the cylinder top to which the gland rings are raised by a distance piece placed below them (see W in the sectional Fig. 3159*a*). Normally, the ports are cut so as to give cut-off at .6 of the stroke, when the gland rings are as low as they can be fitted; the height to which the rings are raised determines the actual cut-off. The cut-off is fixed with reference to the steam pressure and other circumstances; it may be made variable when necessary, either by hand or by the governor, but in this case the mechanism employed is different from that shown in the section. When a very late cut-off is required, it is effected by the ordinary valve motion. In this case there is no valve piston above that which actually closes and opens the ports—*i.e.*, above V^8, V^5, or V^2, as the case may be; the latter being constantly exposed to the pressure in the steam chest.

In the section the piston valve V^8, which commenced to uncover the ports 8, 8, at top stroke, is now at nearly its lowest position relatively to the ports.

Shortly before the piston reaches the bottom of the stroke, the valve V^8, then moving upwards, again uncovers 8, 8, and places them in communication with 9, 9, through which the steam commences to pass from the upper to the under side of the piston.

The space below the piston communicates with the exhaust chamber and the exhaust pipe, the steam passing away, through 8, 8, 9, 9, and the exhaust, during the whole of the up stroke. The exhaust pipe may lead either to the atmosphere or to a condenser.

V^{10} is merely a guide, without packing rings. There are holes giving free passage through it.

In a three-crank engine there will, of course, be a third line of pistons, and a crank, etc., between the two shown in the section. There is, however, no other difference in the description of the engine, except that where there are three cranks 120 degrees apart, the two end lines of pistons cannot be, *simultaneously*, in the two positions shown in the section.

The above description is applicable to the second stage (*i.e.*, to the LP. cylinder) of a compound engine, Fig. 3159, the word "receiver" being substituted for "steam chest." The description of the first stage of expansion is, however, but little different from that of the second. The steam enters the HP. cylinder by the ports 4, 4, and 5, 5, until cut off by the passage of 4, 4, through the gland C^2, the point of cut-off depending, as before, upon the height to which C^2 is raised above the cylinder cover. V^5 is the valve, shown fully open, like V^8 in the cylinder below; it will shortly rise, close the ports 5, 5, and, still rising, will open them to 6, 6; the steam will then pass from above the HP. piston to the space below it, which, this time, is not an exhaust chamber, but a receiver. The receiver may also be regarded as the steam chest of the cylinder below it.

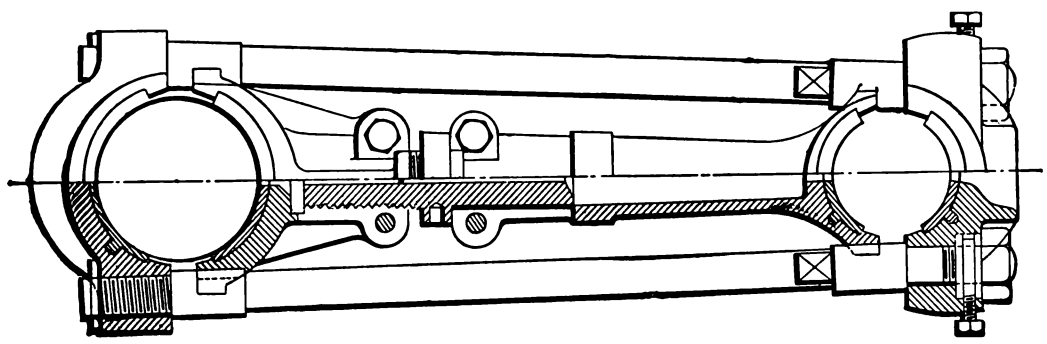

Fig. 3157.

The addition of a third (or "H.HP.") cylinder above the others only involves a repetition of the foregoing paragraph, substituting the ports 1, 1, and 2, 2, as the channel by which the steam passes from the steam chest to the cylinder, the cut-off being given by the passage of the ports 1, 1, through the gland C^1, and the exhaust (into the receiver below) by the passage of the valve V^2 above the ports 2, 2.

It will be noticed that in the simple, non-condensing engine, the steam remains in the engine, from the commencement of admission to the end of exhaust, for one revolution, as in ordinary engines. But in the compound non-condensing engine, the steam remains for two, and in the triple-expansion engine for three, whole revolutions. In other words, the steam is practically quiescent in a receiver of some kind for half a revolution between each two stages of expansion, and this (which is only possible in a single-acting engine) enables the range of temperature in the several stages to be divided more advantageously than in any other engine.

The water above each piston is swept downwards by the exhaust steam into the space below *during the whole of the exhaust stroke;* it has not to be carried by the piston to the top of the cylinder, and then driven out suddenly through the port in a more or less upward direction, as is the case in other forms of vertical engine. The Willans engine has therefore unique advantages in getting rid of water from the cylinders, apart from the action of the relief valves.

Reference has been made to the fact that the connecting rods, and all the moving parts, are constantly in compression—a condition rendered possible only by the fact that the pistons are single-

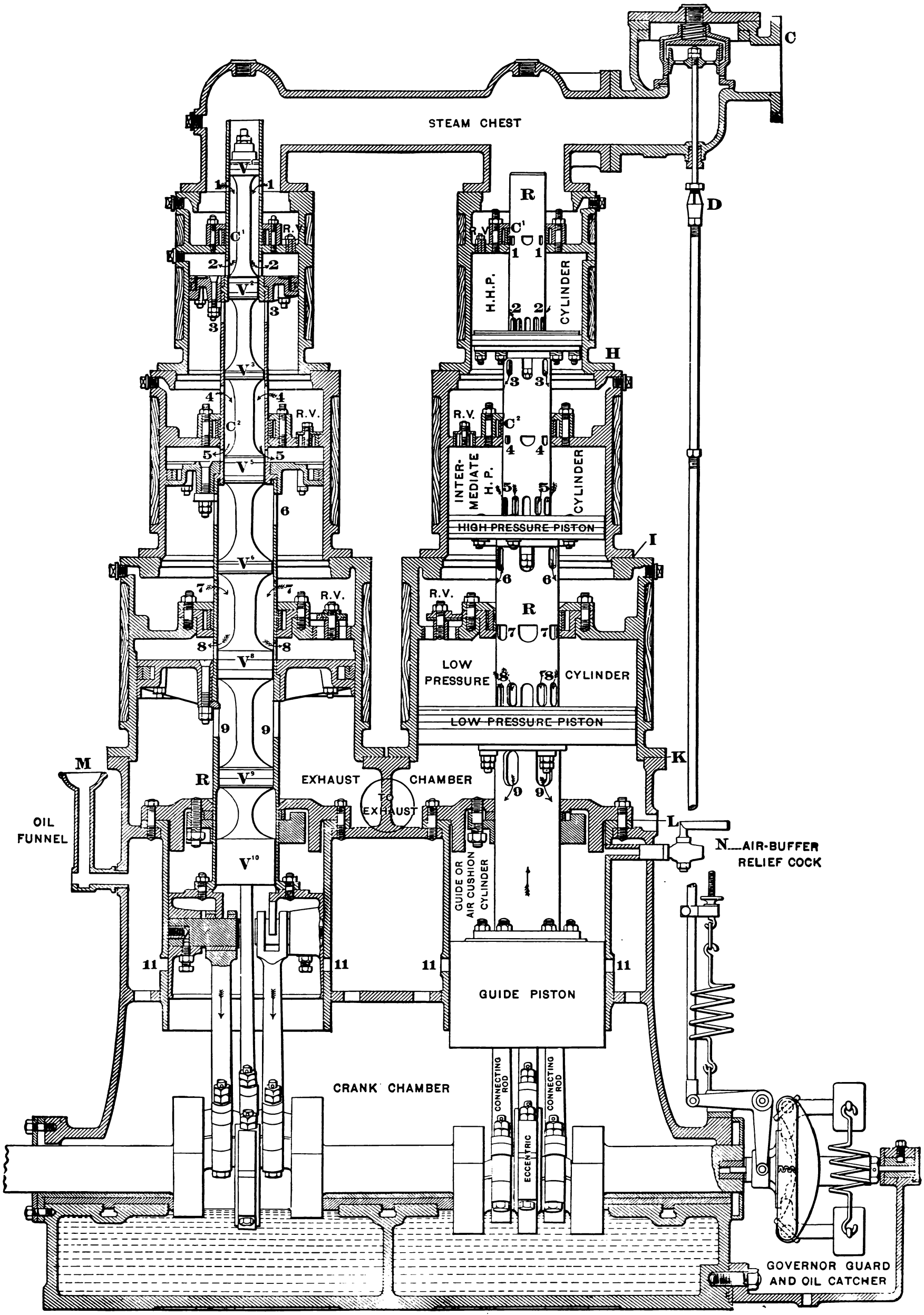
STEAM CHEST
C
D
R
H.H.P.
CYLINDER
H
INTER-
MEDIATE
H.P.
CYLINDER
HIGH PRESSURE PISTON
I
R.V.
LOW
PRESSURE
CYLINDER
LOW PRESSURE PISTON
K
M
OIL
FUNNEL
EXHAUST
CHAMBER
TO
EXHAUST
L
N
AIR-BUFFER
RELIEF COCK
GUIDE OR
AIR CUSHION
CYLINDER
GUIDE PISTON
CRANK CHAMBER
CONNECTING
ROD
ECCENTRIC
GOVERNOR GUARD
AND OIL CATCHER

Fig. 3158.

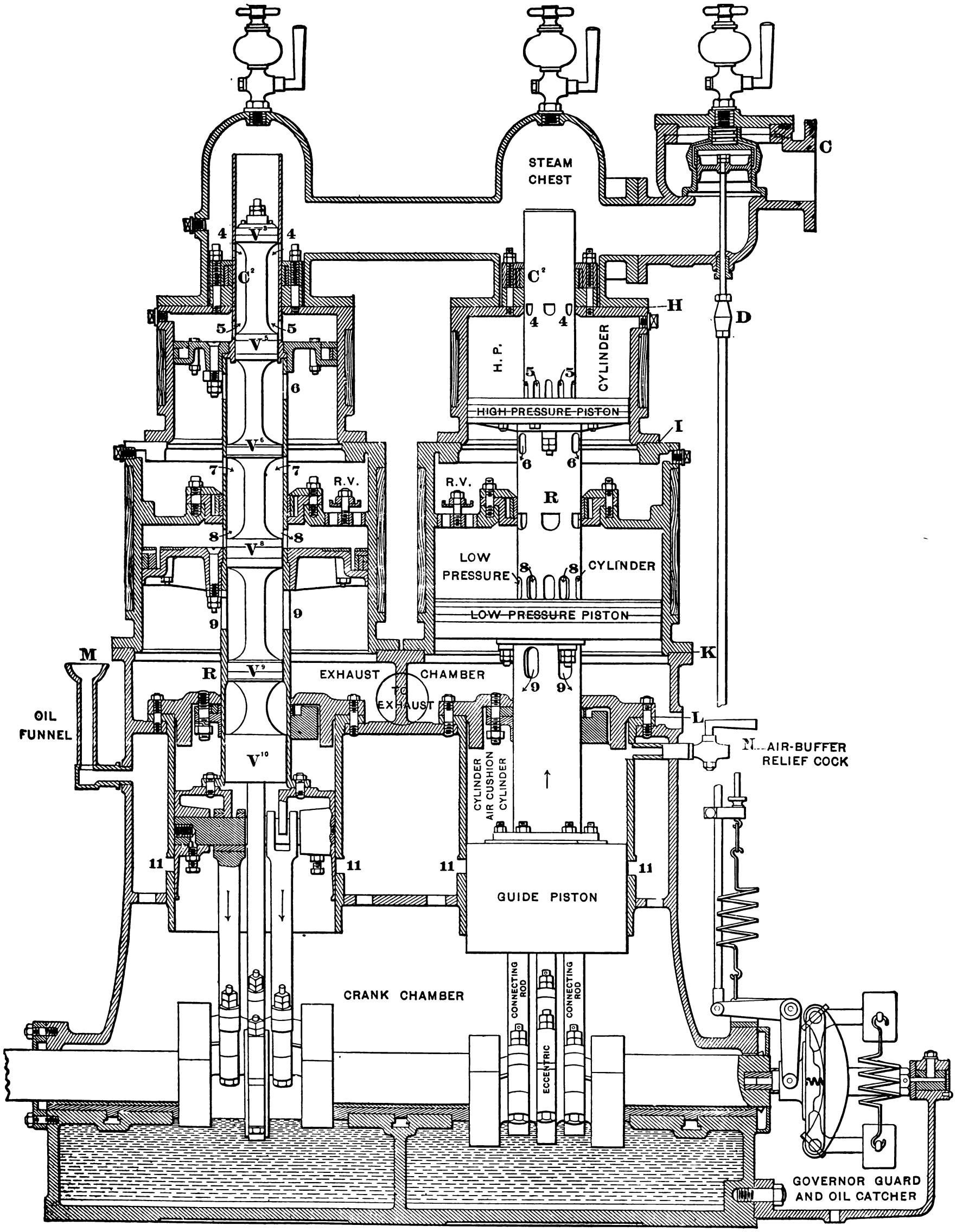
STEAM CHEST
C
C²
H
D
H. P.
CYLINDER
HIGH PRESSURE PISTON
I
R.V.
R
LOW PRESSURE
CYLINDER
LOW PRESSURE PISTON
K
M
R
EXHAUST
CHAMBER
TO EXHAUST
OIL FUNNEL
L
N
AIR-BUFFER RELIEF COCK
CYLINDER
AIR CUSHION CYLINDER
GUIDE PISTON
CRANK CHAMBER
CONNECTING ROD
ECCENTRIC
CONNECTING ROD
GOVERNOR GUARD AND OIL CATCHER

Fig. 3159.

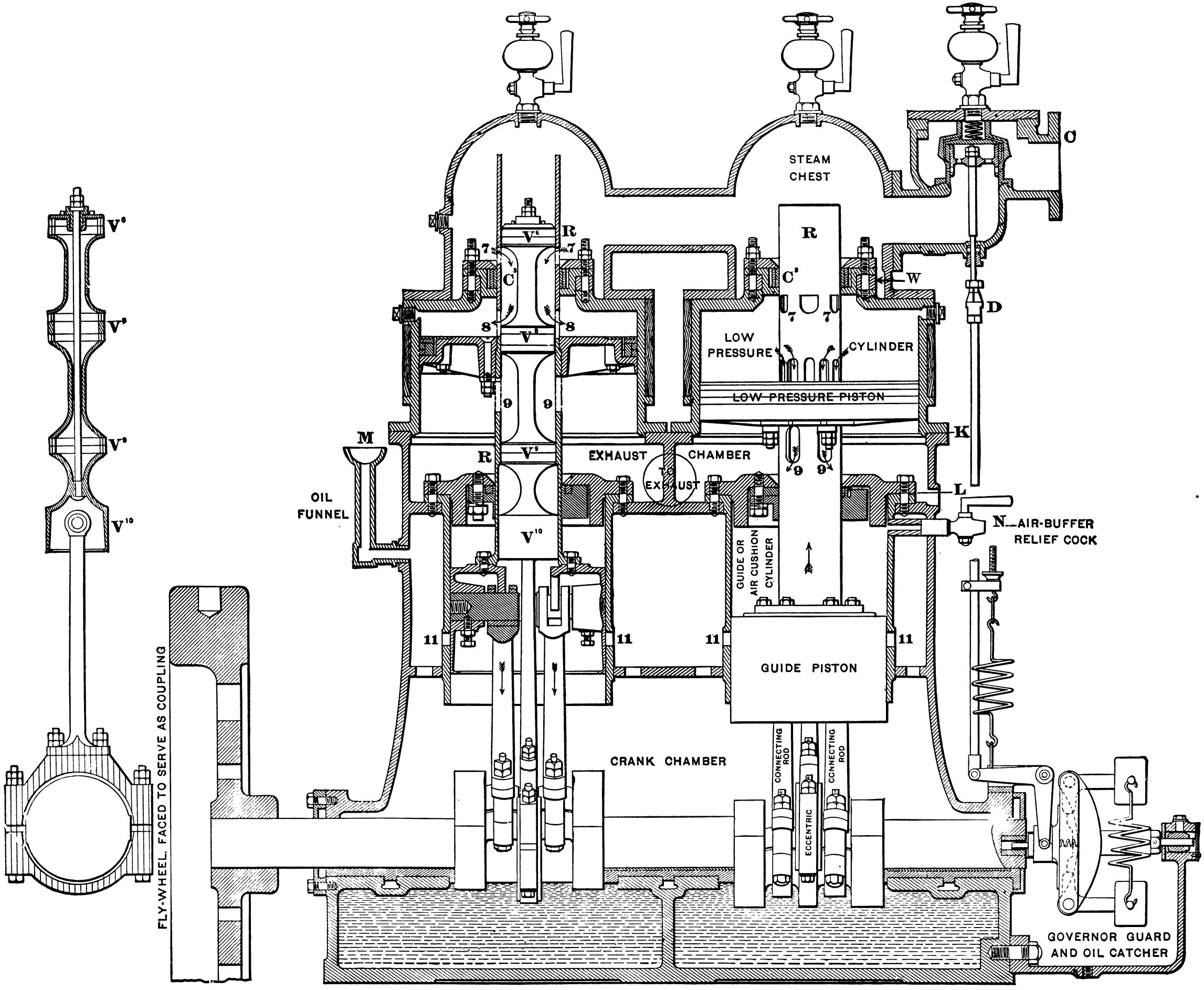
STEAM CHEST
C
R
V⁶
7
C³
8
V⁸
9
V⁹
V¹⁰
W
D
LOW PRESSURE
CYLINDER
LOW PRESSURE PISTON
K
M
OIL FUNNEL
EXHAUST
CHAMBER
TO EXHAUST
L
N
AIR-BUFFER RELIEF COCK
GUIDE OR AIR CUSHION CYLINDER
11
GUIDE PISTON
CRANK CHAMBER
CONNECTING ROD
ECCENTRIC
FLY-WHEEL, FACED TO SERVE AS COUPLING
GOVERNOR GUARD AND OIL CATCHER

Fig. 3159*a*.

acting, giving no pull to the crank upon the up stroke, but only a push upon the down stroke. In any engine running at high speed, however, the moving parts can only be kept in compression upon the up stroke by very powerful cushioning.

The guide pistons on the up stroke compress the *air* contained in the guide cylinders, and thus any desired amount of cushion can be obtained, according to the clearance allowed.* The work expended in compressing the air *is given out again by its expansion on the succeeding down stroke*, and the loss, when the engine is running at good speed, is proved by indicator diagrams to be too minute to be worth consideration. There are holes 11, 11, in the guide cylinders, which are uncovered by the guides at the bottom of the stroke. As the casing or chamber which surrounds the guide cylinders (and forms part of the framing of the engine) is open to the atmosphere, it is evident that the air compression always commences at atmospheric pressure, and is constant and invariable in its results, whatever alteration may be made in the destination or the pressure of the exhaust steam.

In the low-pressure cylinders of all engines, and in the high-pressure cylinders if large enough to be so treated, internal relief valves are fitted, consisting of a gun-metal plug screwed into the top of the low-pressure cylinder. The plug is pierced by holes, covered by a single thin gun-metal disk. When the disk is raised, there is free communication between the cylinder and the receiver (or steam chest) above it. It is kept down under ordinary circumstances by the excess of the receiver pressure over that in the cylinder; therefore, no spring is required, and there is no part liable to get out of order. If, from water in the cylinder, or any other cause, the pressure rises above that in the receiver, the valve lifts, and though the water is only passed back into the receiver, the relief is found to be sufficient, and, in fact, far more effective than that given by ordinary external relief valves. Engines so fitted have been tested by discharging a cubic foot of water suddenly into the steam pipe; also by connecting the steam pipe with the water space of the boiler (by a half-inch pipe, with a difference of 80 lbs. between the pressure in the boiler and that in the steam pipe), without any injury to the engine in either case. In cases where internal relief valves cannot be used, ordinary external valves are fitted. When an engine is run without load, the compression in the low-pressure cylinder may rise beyond the pressure in the receiver; the disk of the valve may then be heard to lift at each revolution, but the noise will go off as soon as the receiver pressure is increased by giving the engine work to do.

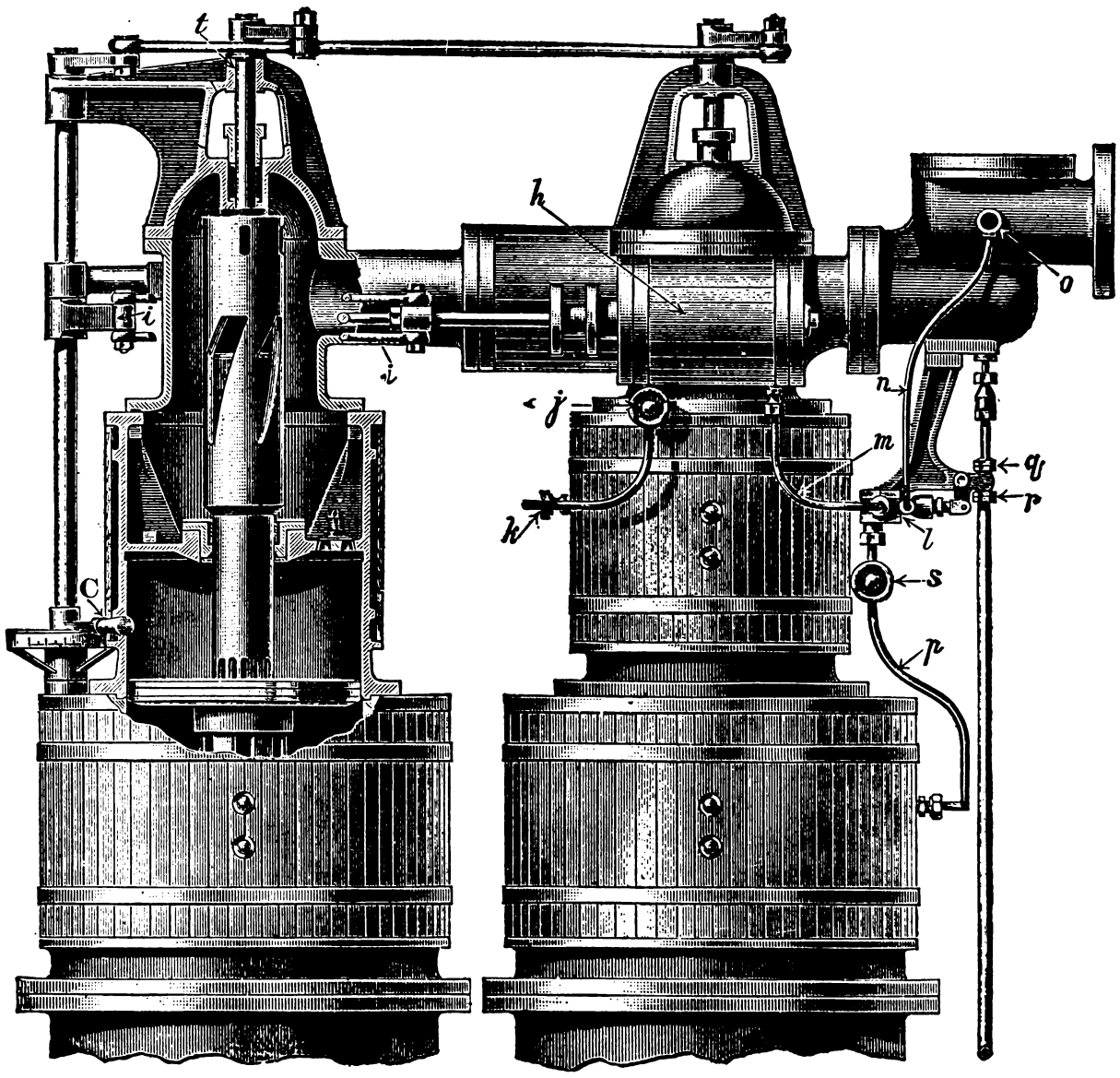

Fig. 3160.

Relief cocks are fitted upon the guide cylinders, in order to avoid compressing the air in them when the engine is being turned by hand, and to facilitate starting. If the cocks are opened at starting, they must be closed again immediately. They must never be open when the engine is running at speed, or the necessary cushion will be wanting. The cocks will be seen at a level slightly lower than the exhaust pipe, but they are usually in the front of the engine and not at the ends, where, for convenience, they are shown in the figure.

The drain cocks on the receivers should be fully opened before starting, and should be kept open for a short time after starting. They must then be closed, and be kept closed while running, except, occasionally, to draw off any water which may have collected, when they should be opened only to the smallest extent, sufficient to allow the water to escape. The receiver drains are connected by copper pipes with the exhaust chamber.

Usually only one lubricator is required, of the "sight-feed" pattern. After the engines have worked for some time, a very

* The amount of cushion is fixed in each case to suit the intended speed, and may be insufficient to prevent knocking if that speed is largely exceeded. If, for any reason, it is desired to run an engine materially faster than was originally intended, and the engine is found to knock at the increased speed, the speed must be reduced until the knocking disappears.

small supply of *good* mineral oil will suffice for the cylinder. Grease cups are also fitted, *but only as a stand-by*, or for giving the engine a small flush of oil at starting, or just before stopping for a long period.

At M on the sectional view is shown a funnel for introducing oil into the crank chamber—preferably the best castor oil, *not* mineral oil. The funnel (the usual place for which is on the front of the engine, and not where shown) also establishes communication between the air-cushion cylinders and the atmosphere, when the guide pistons are at the lower end of their stroke. When water is required to be added, it should be poured in through the open top of the lubricant gauge—*not* through the oil funnel.

The quantity of oil required for the crank chamber is, under ordinary circumstances, very small indeed; if of the right quality, say from 1 to 4 pints weekly, according to the size of the engine, the number of hours run, etc.

The nearly enclosed upper part of the crank chamber acts as an air cushion on the oil surface. Since the gauge communicates only with the lowest part of the crank chamber, very little oil passes into it, and any overflow which takes place consists almost entirely of water. The gauge enables the quantity of lubricant in the crank chamber to be easily ascertained at any time by the attendant. The normal height at which the lubricant should be maintained is from three-quarters of an inch to an inch below the under side of the crankshaft.

To take the engine to pieces, disconnect the steam pipe at C, and the governor spindle at D (marking the latter so that it may go together again with the same length as before); then, if dealing with a compound engine, break the joints H and I, and lift off the steam chests and the high-pressure cylinders. (The tops of the hollow piston rods will draw down through the glands.)

If it is desired to examine either of the low-pressure pistons, slack off the nuts on the long bolts in the high-pressure piston, and remove the plates or catches which enter the ports 6, 6. The high-pressure piston can then be lifted off, with the upper part of the hollow piston rod. This will expose the valves V^3 and V^5. Then break the joint K, and lift off the low-pressure cylinder and the receiver, exposing the low-pressure piston.

If it is desired to examine the guide piston, remove the low-pressure piston (secured by nuts and plates, as above); then lift off the guide cylinder cover by breaking the joint L. Then (through the crank-chamber door) disconnect the connecting rods from the crank and the eccentric strap, after which the guide piston can be drawn out with the hollow piston rod containing the valves attached to it, together with the connecting rods and eccentric rod. To examine the valves, remove the steel pins upon which the connecting rods work (the pins have tapped holes in the exposed ends, to enable ordinary bolts to be screwed in, to remove them by). On taking away the connecting rods, the line of valves can be drawn out downwards. The line of valve pistons is held together by a steel tie-rod through the centre; by removing the nuts at the top the several pieces can be taken apart. Directions for tightening up these nuts, when necessary, are given in the "Instructions for Working."

If dealing with a triple-expansion, or with a simple engine, precisely similar instructions apply, but the number of operations is greater in the one case and less in the other. Inspection of Figs. 3158 and 3159 will show at once what has to be done.

To expose the crankshaft and main bearings, disconnect the steam and exhaust pipes and the governor spindle and (through the crank-chamber door) remove the lower brasses of the connecting rods and the bottom half of the eccentric straps. Then break the joint which divides the crank chamber horizontally at the level of the crankshaft, and lift off the upper part of the engine. The crankshaft will be left lying in the main bearings, ready to be lifted out.

Each line of pistons is connected to its corresponding crank by two exactly similar connecting rods with a space between, in which works an eccentric, forged solid upon the crankpin. The connecting rods work at the top upon two hardened steel pins, so supported that the pressure of the rods exerts no twisting strain upon them. The eccentric rod plays in the space between.

The eccentric is on the crankpin, and not on the shaft, as usual, because the valve face (*i.e.*, the inside surface of the hollow piston rod) *moves with pistons*. Consequently, the valve motion required is a motion *relative to the pistons*, and this is obtained by mounting the eccentric on the crankpin, which, like the piston rod, moves up and down with the pistons. Though its lead is set out differently from that of an ordinary eccentric, its effect upon the movement of the valves is exactly the same.

The upper crankpin brasses of the connecting rods are wider than the lower ones. This is because the upper brasses alone are intended to be in actual contact with the crankpins; the lower ones are only a stand-by in case of accident. All the moving parts of the engine are designed to be strictly in "constant thrust"; the connecting rods are *always in compression, never in tension.* The lower brasses, to be useful as a stand-by, should not be too far from the crankpin, and the wear should be taken up when it becomes excessive, say as soon as it reaches $\frac{1}{32}$ inch, care being used that the lower brasses are not brought actually into contact with the crankpin, and that sufficient slack is left to insure an audible knock if the engine is allowed to race, so as to attract attention. The wear of the brasses can be *watched* in the following manner:

A small hole is drilled in each guide piston, $\frac{1}{8}$ inch in diameter, so as to be just visible below the bottom edge of the guide cylinder when the crank chamber door is removed, and when the piston is at the bottom of its stroke; when the entire diameter of the hole is in view below the guide cylinder, it is time both to set up the brasses, so as to reduce the play, and to pack up the connecting rods by inserting packing pieces between the big ends of the connecting rods and the brasses. The connecting rods, however, must not be packed up sufficiently to take the hole quite out of sight; its lower side must still be in sight (at bottom stroke) under the edge of the guide cylinder; if the hole goes out of sight entirely there will not be enough clearance for safety between the low-pressure piston and the top of its cylinder.

The eccentric rod is intended to work always in compression, in the same way as the connecting rods, the holding-down power being furnished by the pressure of the steam in the steam chest, acting constantly upon the uppermost piston valve. It may sometimes happen, if the engine is run with a very light load, but at high speed, that the pressure in the steam chest (being much throttled down by the governor) is insufficient to keep the eccentric rod in contact with the eccentric upon the up stroke. If so, a slight knocking may be heard, as the lower eccentric strap is purposely left an easy fit upon the eccentric (for reasons already explained in the case of the connecting rod brasses). Such knocking is unimportant, if not allowed to continue too long; it will cease as soon as the engine is given work to do.*

A further reason for the moderate wear of the brasses (and eccentric straps) is that they dip bodily into the lubricant in the crank chamber at every revolution. In doing so they splash it over the main bearings, and to the upper ends of the connecting rods and eccentric rods, and into the guide cylinders, as well as into that part of the hollow piston rod where the guide V^{10} works.

The construction of the centrifugal governor is shown in Figs. 3160 and 3161 connected to throttle valve, of the piston type, without rings, which works up and down inside a cylindrical bush A. The bush, which has a closed top, is held down by a stiff coiled spring and by the steam pressure, and its lower end, which is faced, makes a steam-tight joint against a face on the casing, as shown. (The object of this arrangement is to give freedom for expansion in the bush.) The boiler steam is admitted from the outside of the bush, in which there are usually two rings of ports, the

* Systematic working of the engine at much less than its proper load is, however, in every way objectionable. It not only leads to excessive wear of the eccentric straps, and to the risk of a break-down if the wear is not taken up regularly, but it implies an exceedingly uneconomical use of the steam.

The principle of working with all brasses "in constant thrust" is of the utmost importance and value, and is the primary cause, not only of the silent running of the Willans engine, but of the almost complete absence of wear in the brasses. It is the condition which alone makes continuous high speed possible.

amount of opening through the lower ring being regulated by the position of the lower edge of the throttle valve. Corresponding with the upper ring of ports is an annular port in the throttle valve; the distance of this from the lower edge of the throttle valve is such that the upper port commences to open slightly earlier than the lower one.

Occasionally only one ring of ports is used, while in cases where, owing to lowness of pressure, or other causes, only a very small drop in pressure can be allowed between the steam pipe and the steam chest, a third ring of ports is added, with a second annular port in the throttle valve. The lubrication of the valve is effected

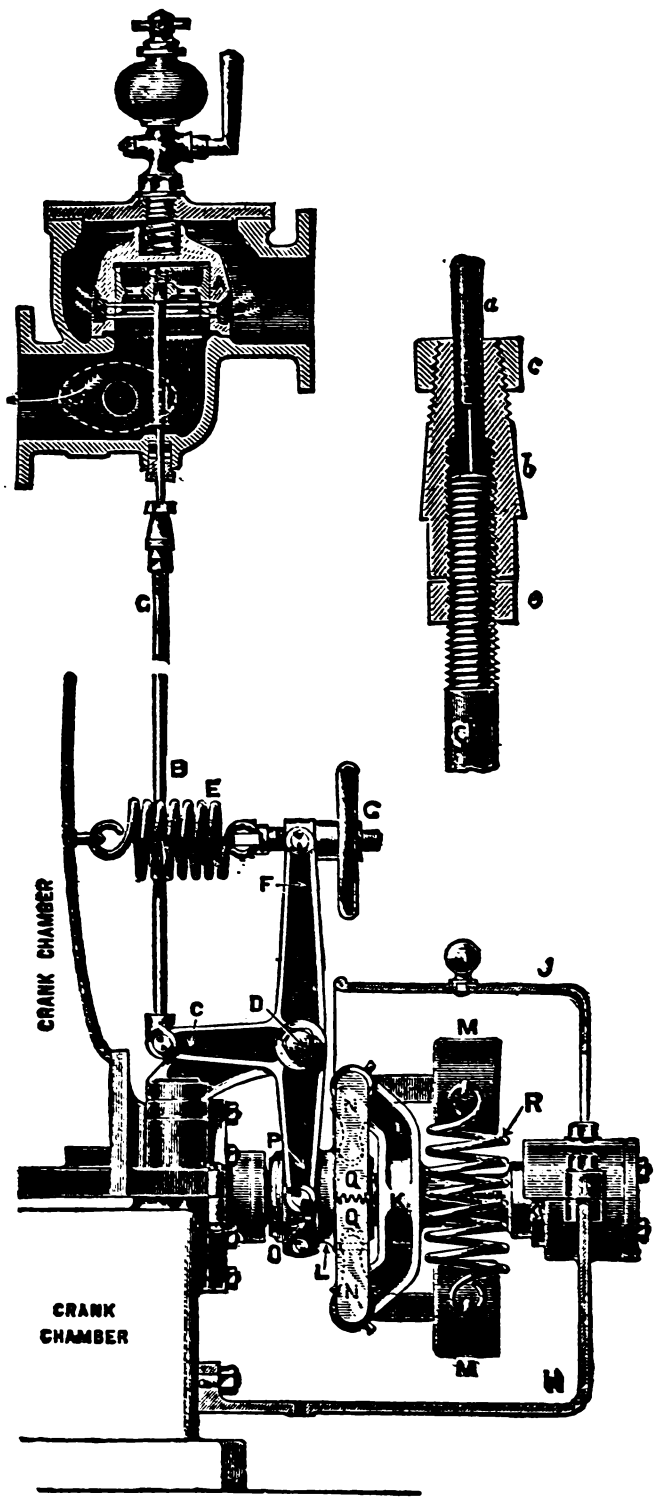

Fig. 3161.

by passages in the body of the bush, supplied from a lubricator on the cover. The throttle-valve rod B is attached by a pin joint to the arms C of two similar bell-crank levers which are pivoted at the joint D upon a bracket bolted to the crank chamber. There are two springs E, attached at one end to the crank chamber, and at the other to the arms F of the levers, through a screw and hand wheel G, by means of which the pull of the springs upon the upper end of the lever can be varied. The governor spindle is rigidly attached to the end of the crankshaft, and forms a combination of it, and its outer end is carried by a bearing in the "governor guard" H, which consists of a cast-iron trough bolted to the crank chamber and provided with a cover J, opening on a hinge, so that the revolving parts are perfectly accessible; the guard is both to protect the governor and those passing near it, and to catch oil thrown off from it. The revolving parts consist of a sleeve and pair of brackets K K in one casing, and of a short sleeve or collar L, both mounted upon the spindle. K K is free to slide lengthways upon the spindle, but is compelled to turn with it by means of a feather. The brackets K K carry the governor balls M M, which are mounted upon bent levers, whose short ends N N fit into a circular groove in the collar L. L is compelled to turn with the arms N N by short pins placed across the groove. O is a second collar, loose upon the collar L, but not able to move longitudinally upon L, because it lies partly inside a deep circular groove in it, while it is also prevented from revolving with it by the arms P of the two levers mentioned above, to which it is pivoted. The levers Q Q are rigidly attached to the arms which carry the balls, and their free ends are geared together as shown; by this means the governor is balanced against the action of gravity. The levers Q Q form in effect segments of two ordinary gear wheels.

The action is as follows:

The springs E, acting through the levers F P, and the collar O, keep the collar L constantly pressed against the arms N N, and consequently the bracket and sleeve K K constantly pressed against the end of the bearing in the governor guard, which is faced to work against a collar upon the end of K K. The revolving parts of the governor are therefore kept steadily in one position, endways, unaffected by the end play in the spindle or crankshaft.

The springs E also, by their pressure upon the arms N N, supplement the centrifugal force of the governor balls, and assist them to move outwards against the resistance of the springs R. These springs are made in varying degrees of stiffness, so as to meet the varying conditions under which the engines may be required to work. As the arms N N move outwards, the collar L can follow them up, and permit the springs E to draw down and close the throttle valve more or less completely by means of the arm C. The relation between the centrifugal force of the balls, assisted by the tensions of the springs E and the tension of the springs R, is such that if the speed decreases the springs E are overpowered, and the valve is opened. If more tension be put on E by means of the hand wheel G, the engine will run slower; if less, faster.

Fig. 3160 shows an elevation of the variable expansion gear applied to Willans central-valve engine. In this gear the cut-off arrangements are somewhat different from those of the fixed expansion engine described in Fig. 3158. The ports in the uppermost trunk are cut obliquely, and the trunk itself moves up and down in a hollow sleeve suspended from the top of the steam chest. In this sleeve corresponding oblique ports are cut, and when the ports in the trunk pass below the lower edge of the ports in the sleeve, steam is cut off in the same way as when they enter the gland in the cylinder head of the fixed expansion engine.

The sleeve is suspended from the rod *t*. It is fixed as regards up-and-down motion, but can be rotated upon its axis, by means of the links and levers shown, either by the hand lever C, or automatically by means of the steam cylinder *h*, the action of which is controlled by the governor, as explained below. Since the ports in the sleeve are cut obliquely, it follows that the ports in the trunk, when descending, meet their lower edge earlier or later in the stroke, according to the relative angular position of the sleeve. The hand lever carries a pointer which works in front of a graduated sector fixed upon the cylinder, and shows the point of the stroke at which cut-off takes place. Arrangements are made by which the cut-off is prevented from becoming earlier than the point where the reduction of load, by throttling the steam, is more economical than greater expansion. For loads less than this, the engine is governed purely by the throttle valve, the cut-off for the time being fixed. For heavier loads the cut-off varies with the load, a result which is obtained as follows:

The system of levers which moves the cut-off sleeve is connected with the piston of the relay cylinder *h* by the links and lever *i*, and the ports in the sleeve and trunk are so arranged that cut-off is made earlier when the piston moves to the left, and later when it moves to the right. The left-hand end of the cylinder is connected to the steam chest by the valve *j* and pipe *k*, and the right-hand

end is connected to a small slide valve *l* (called the controlling valve) by the pipe *m*.

This valve, by its movement, connects the right-hand end of the cylinder either to the steam pipe outside the throttle valve by the pipe *n* and valve *o*, or to the receiver or exhaust by the pipe *p*, but not to both at the same time.

The valve is worked by a small bell crank moved by locked nuts (*q* and *r*) placed on the governor rod. When adjusted, the controlling valve is just on the point of opening when the throttle valve is nearly full open, so that, at or below the full open position of the throttle valve, the cylinder *h* is open to the steam pipe; but if the throttle valve rises above its full open position the relay cylinder is opened to the receiver or exhaust, and the connection to the steam pipe is closed.

In normal running, the right-hand end of the cylinder is thus connected to the steam-pipe; in fact, the two ends are in communication with the two sides of the throttle valve.

The action of the gear is as follows:

(1) If even a small portion of the load is removed from the engine, the speed momentarily increases, the throttle valve closes, and the pressure in the steam chest, and consequently in the left-hand end of the relay cylinder, falls, while that in the right-hand end is unchanged. Under this difference of pressure the piston moves to the left, making the cut-off earlier until about 5 lbs. below separator pressure is reëstablished in the steam chest.

(2) If load is put on the engine the speed momentarily drops, the throttle valve rises, the pressure of the nuts *q* on the controlling valve bell crank is relieved, and the valve opens the communication between the right-hand end of the relay cylinder and the exhaust, at the same time closing the steam supply through the pipe *n* (the lower nuts are merely a safety appliance, in case the controlling valve sticks); the pressure falls very rapidly in the right-hand end of the relay cylinder, and the piston moves to the right, making the cut-off later.

As the pressure in the exhaust is considerably lower than that in the steam chest, the cut-off is altered with great rapidity, a fact of importance in enabling the engine to respond at once to sudden or large increases of load, such, for instance, as occur in tramway work. When exceedingly rapid changes are needed, so as to deal with very large and sudden increases of load, the pipe from the valve may be connected to the exhaust; when such quick alterations are not required, it is often sufficient to lead it into the receiver. In the reverse action of making the cut-off earlier, the difference of pressure is not usually so great, and the movement is somewhat slower; but this does not matter, as the throttle valve holds the engine completely under control.

The rapidity of this action also can be controlled by the valve *j*.

A three-valve *s* is, in some cases, placed in the exhaust of the controlling valve. Normally it is full open, making the communication between the controlling valve and the receiver or the exhaust, as the case may be. There is also an outlet to the atmosphere for purposes of adjustment, and the valve can be set so as to close the communication between the controlling valve and the receiver or exhaust and open that between the controlling valve and the air.

INSTRUCTIONS TO THE ENGINEER OR ENGINE DRIVER.—Before first starting the engine, the following examination of the governor should be carried out, an examination which it is also well to make periodically. The springs R should first be removed and the springs E slackened until the hand wheel G reaches the split pin; the bell-crank levers should then work quite freely, but not too freely. The governor balls should then be pressed together, and on releasing they should open out immediately without perceptible friction. If any friction is apparent, it may be due to the gland packing. If not due to the gland packing, the throttle valve should be taken out of its box and examined to see whether any grit has got in, or whether there is any rust.

If there is neither rust nor grit the valve should be polished with the finest emery cloth, which has already been well used. This operation should be done with the greatest care, for if the throttle valve is made too slack it will be ruined. A very slight amount of polishing will probably be sufficient. To ascertain whether the sleeve K is binding on the shaft, it is necessary to remove the springs E. When this has been done, it should slide quite freely upon the spindle. The collar O should revolve quite freely upon L. This may be tested by removing the pins which connect it to the bell cranks. When all the above points are satisfactory, the throttle-valve gear will be in working order as regards its mechanism. The setting of the valve is dealt with further on.

To try the cut-off sleeves and hand gear, the pin which connects them with the piston rod at the relay cylinder, when the expansion gear is automatic, should be taken out. The hand gear should move quite freely; that is to say, it should be possible to move the handle with a pull of from 5 to 10 lbs. If this pull is exceeded, it will be necessary to examine the various levers, one by one, to see if there is any binding and to try the sleeves separately by disconnecting from the horizontal rod.

The relay cylinder can be tested by opening the valves *j* and *o*. It should then be possible to move the piston by means of the piston rod fairly easily. If it is very stiff the packing of the gland should be examined and the cylinder opened up, if necessary. Want of lubrication may, of course, be the trouble.

To examine the controlling valve, the nuts *q* and *r* should be screwed back as far as the screw thread will admit, so as to free the bell crank (these should be left in this position until the final adjustment). The controlling valve rod should then move perfectly freely; if it does not, the gland packing requires attention. The valve cover should be removed, and the valve and valve seat examined and the cover replaced.

The revolving parts of the governor require no setting.

The adjustment of the throttle valve must be done while the engine is running. The engine should be started and the stop valve opened very slowly, because, should the throttle valve be too much open, the engine would race away. The adjustment is effected by means of the sleeve nut connecting the throttle-valve spindle with the throttle-valve rod by slacking the lock nut *e* (Fig. 3161) and screwing the adjusting sleeve nut *b* either up or down the rod. The spindle *a* and the throttle valve are free to turn with the sleeve nut, to which *a* is firmly connected by the taper nut *c* (*b* is split at its upper end).

If the valve cannot be got to shut off sufficiently by means of the adjusting nut *b*, then a course of adjustment may be given by slacking the taper nut *c*, which will allow the valve spindle *a* to be pushed further into the recess bored for it in the nut *b*; the adjustment may be completed by *b*, as described above.

Two positions of the sleeve nut can be found—one at which the engine is just on the point of racing, and the other where it is just on the point of hunting. Midway between these is the correct adjustment. The adjustment of the throttle valve must be made with full boiler pressure and full vacuum if a condensing engine, and, if the expansion is variable, with the latest point of cut-off.

The throttle valve should never be set when the engine is running under load. If this is done, it will practically be out of action at highest load, and the engine may race dangerously.

If the engine is fitted with variable expansion gear, the cut-off should then be changed rapidly several times over the complete range with the hand lever, the relay cylinder having been disconnected by removing the pin *i*; the throttle valve should respond rapidly, and the engine speed should not vary more than from 1 per cent. to 2 per cent., according to the weight of the flywheel.

If possible, the engine should now be placed on the load, and the cut-off adjusted by hand. Thus satisfactory evidence will be obtained that the throttle valve is working properly.

When the expansion gear is automatic the controlling valve should next be adjusted. The valves *j* and *o* should be opened, the lock nuts *q* and *r* being screwed up and down respectively as far as possible, so as to free the controlling valve, the relay cylinder disconnected, and the three-way cock *s* open to discharge into the air, or the controlling valve exhaust disconnected. On pressing down the bell crank so as to just shut the controlling valve there should be no leak into the air, or, at any rate, it should be extremely slight. Should there be any leak, the bell crank should be worked backwards and forwards several times. This will grind the valve faces together under pressure. On opening the controlling

valve there should be only a very slight leak after the first discharge of steam. The three-way cock should now be turned into its normal position, or the exhaust connected up.

On nearly closing the valve *o* and moving the controlling valve by hand, the piston rod of the relay cylinder ought to follow the motions of the controlling valve, and ought to move with great rapidity when the controlling valve is opened to exhaust, and comparatively slowly in the opposite direction. This is a matter which can be regulated by the amount of opening of valves *j* and *o*. The less these valves are opened the better, but they must be opened wider for constantly changing loads than for slowly changing loads.

The piston of the auxiliary cylinder should now be connected to the cut-off gear; and inasmuch as the controlling valve will naturally be open, the cut-off will set itself at the latest point.

The nuts *q* should then be screwed down to bear on the bell-crank lever until the piston of the relay cylinder begins to move forward, and should be further slightly screwed down until the pressure in the steam top reaches, or nearly reaches, the separator pressure.

The behaviour of the cut-off gear should now be watched for a short time. On a diminution of the load the cut-off should become earlier comparatively slowly, but if the load increases, the cut-off should become later very rapidly.

If it does not do so, the nut *q* has been screwed down too far, or the valve *o* is too much open.

When all is satisfactory, the nuts *q* can be locked, and the nuts *r* locked against the distance piece; it should be ascertained that these nuts do not jam the bell crank between them.

If the steam-pipe pressure is allowed to exceed that for which the engine was first adjusted, it is evident that the minimum opening of the valve (corresponding with the position of the governor balls when the arms are against the stops) will allow too much steam to pass when the engine is at lightest load, and there will be danger of racing. In such a case the valve must be readjusted in the manner described above.

It must, therefore, be understood that readjustment of the valve is necessary when the steam-pipe pressure is materially altered. A large excess of pressure on the outside of the throttle valve involves, of course, a smaller opening of the valve for every load. Hence the total travel of the valve is less, and there is a relatively large difference in steam supply for only a small range of movement in the balls. In other words, a slight variation produces large effects, and there is no danger of hunting. It is for this reason that extreme sensitiveness is not desirable where there is a liability to wide variations of pressure.

WORKING ADJUSTMENT.—As has been explained above, the springs E assist the balls to move apart. If more tension is put upon them the balls will move apart and control the engine at a lower speed; if less tension, they will only do so at a higher speed. These springs, therefore, act as an adjustment, by which the speed of an engine can be varied while running, and the arrangement is so designed as to give a range of speed amounting to as much as 30 per cent. of the mean if desired. Ordinarily, however, 10 per cent. is arranged for.

The governor balls have holes drilled in them, some or all of which are filled with lead, to suit the required speed, before the engine leaves the works.

Should the engine be required to run at a speed greater than the governor will allow, the balls should be (equally) reduced in weight by removing some of the lead, until the engine, when working light, under full steam pressure, is able to run slightly faster than the speed intended; the final adjustment may then be made by the speed regulator. Care should be taken to reduce the weight of each ball symmetrically, that is to say, lead should be removed from opposite holes, and equally from each. As a guide in making adjustments, it should be noted that the complete removal of lead from *two* holes previously full effects an alteration in speed of approximately 7½ per cent. If necessary, new balls can be supplied to suit any required increase of speed, if the engine is in other respects adapted for it, but, for reasons unconnected with the governing, no large increase of speed should be attempted without previous communication with the makers. The packing in the gland through which the rod *a* passes should be soft or malleable, and must not be screwed up too tightly. If it causes too much friction the governor will be liable to hunt. Hunting is often caused by dirt. All parts should be thoroughly oiled and periodically cleaned.

If it is found that the engine will not run at the proper speed, the cause may be one of the following:

First: Speed too high at all loads.

(1) The balls may be too light. They may be made heavier by filling some of the holes with lead, care being taken to do this symmetrically, and to increase the weight of both balls equally, as explained above.

Second: The steam pressure may be higher than that for which the throttle valve has been set. If the reduction of pressure is permanent the valve may require resetting.

Third: Speed too low towards full speed. The pressure may be so low that it is impossible to get the load out of the engine. This is a matter unconnected with governing, and the only remedies are either to raise the steam pressure or to make the cut-off in the HP. cylinders later.

Fourth: Speed uncertain; sometimes too high, sometimes too low.

(1) The governor may be incorrectly set.

(2) The governor may be stuck.

Fifth: Speed too high at light load, too full at full load.

The governor springs R are too stiff. The remedy is to replace them by more flexible ones, which can at once be done by communicating with the makers. Before altering the weight of the balls it should always be ascertained that any error in speed is not due to one or the other causes enumerated.

No attempt should ever be made to increase the speed by screwing the throttle valve up to give the engine more steam. If this is done the governor is put out of action, and when the load is taken off, the engine will race dangerously.

THE STRAIGHT LINE ENGINE.—A superior example of a strictly high-speed engine is the straight line engine designed by Professor John E. Sweet, of Syracuse, New York, and constructed by the Straight Line Engine Company of the same place.

The description of this engine and its parts cannot be better given, perhaps, than in the language of its designer (the details of construction of its balanced double-ported slide valve having already been fully described with reference to the Ames Iron Works engine, Figs. 3081 and 3082, that company using it under license). Fig. 1, Plate XXVI., represents the single valve, and Fig. 2, the double valve engine. Figs. 1 and 2, Plate XXVII., are, respectively, a vertical and a horizontal longitudinal section of the double valve engine.

Figs. 1 and 2, Plate XXVIII., show the governor and the valve motion.

The design, differing as it does from all others, admits of some explanation. Any structure having considerable length and breadth in proportion to its depth must be supported on three self-adjusting points of support to be free from torsion when resting upon an unstable foundation. All strains go in straight lines, and the plan of this engine conforms to these two leading ideas. The design is believed to be consistent in that all boundary lines are straight, ending in graceful curves; all cross sections of stationary parts rectangular, with rounded corners; and all moving arms and levers wide and thin, with the longest axis in the direction of the greatest strain. It is believed that there are but few points where the design can be improved by dispensing with any of the features.

The governor, as shown, consists of a single ball linked to the eccentric and connected to a spring by a metal strap, and so located and weighted as to counterbalance the eccentric and its attachments, and which controls the speed of the engine in this way. When the speed of the engine reaches the point where the centrifugal force of the governor ball overcomes the resistance of the spring, the ball moves away from the centre of rotation, and in doing so carries the eccentric nearer the shaft; shortens its throw and the travel of the valve, and cuts off the steam admitted to the cylinder.

The ball is of malleable iron, cast hollow and loaded with lead

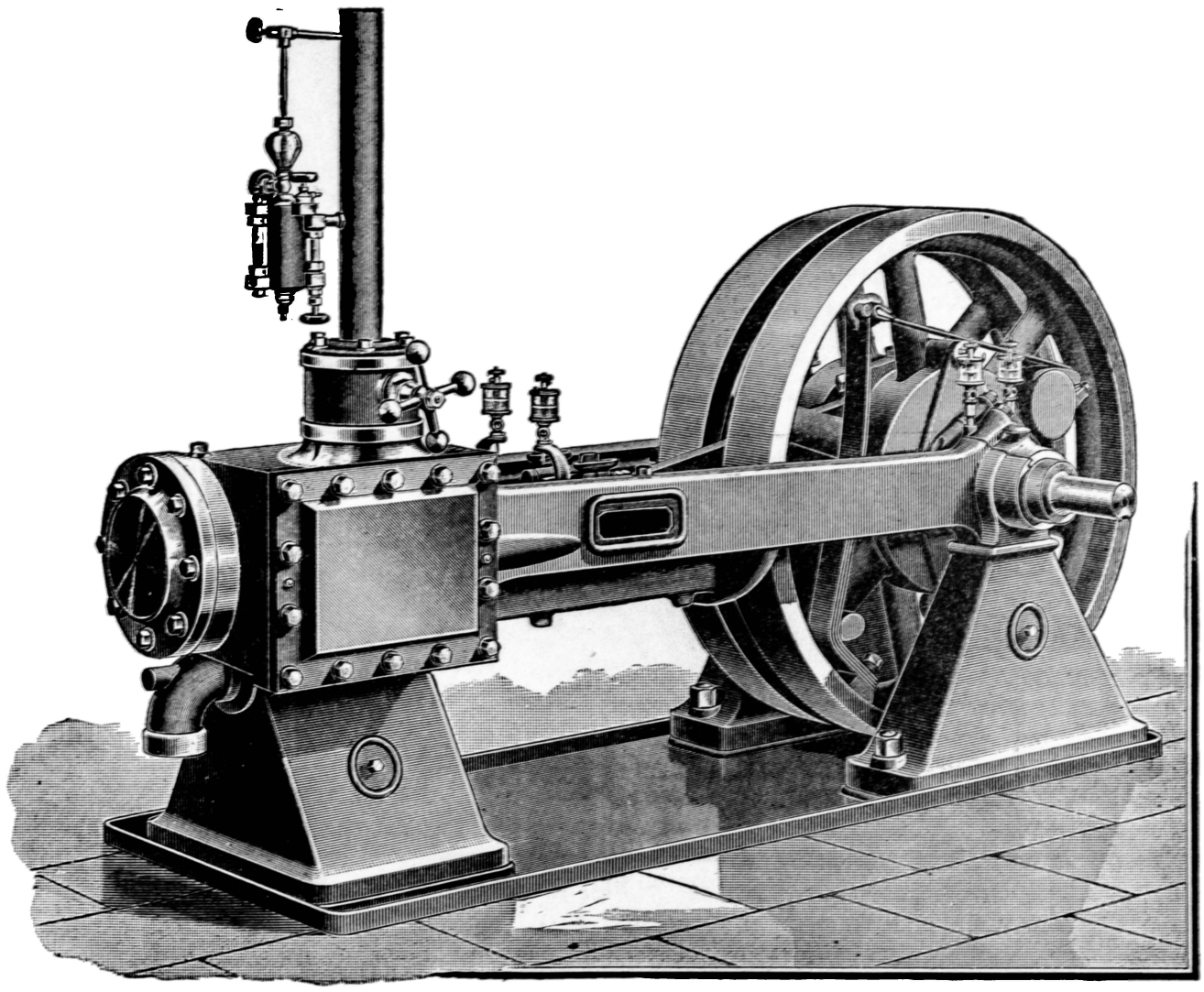

Fig. 1.

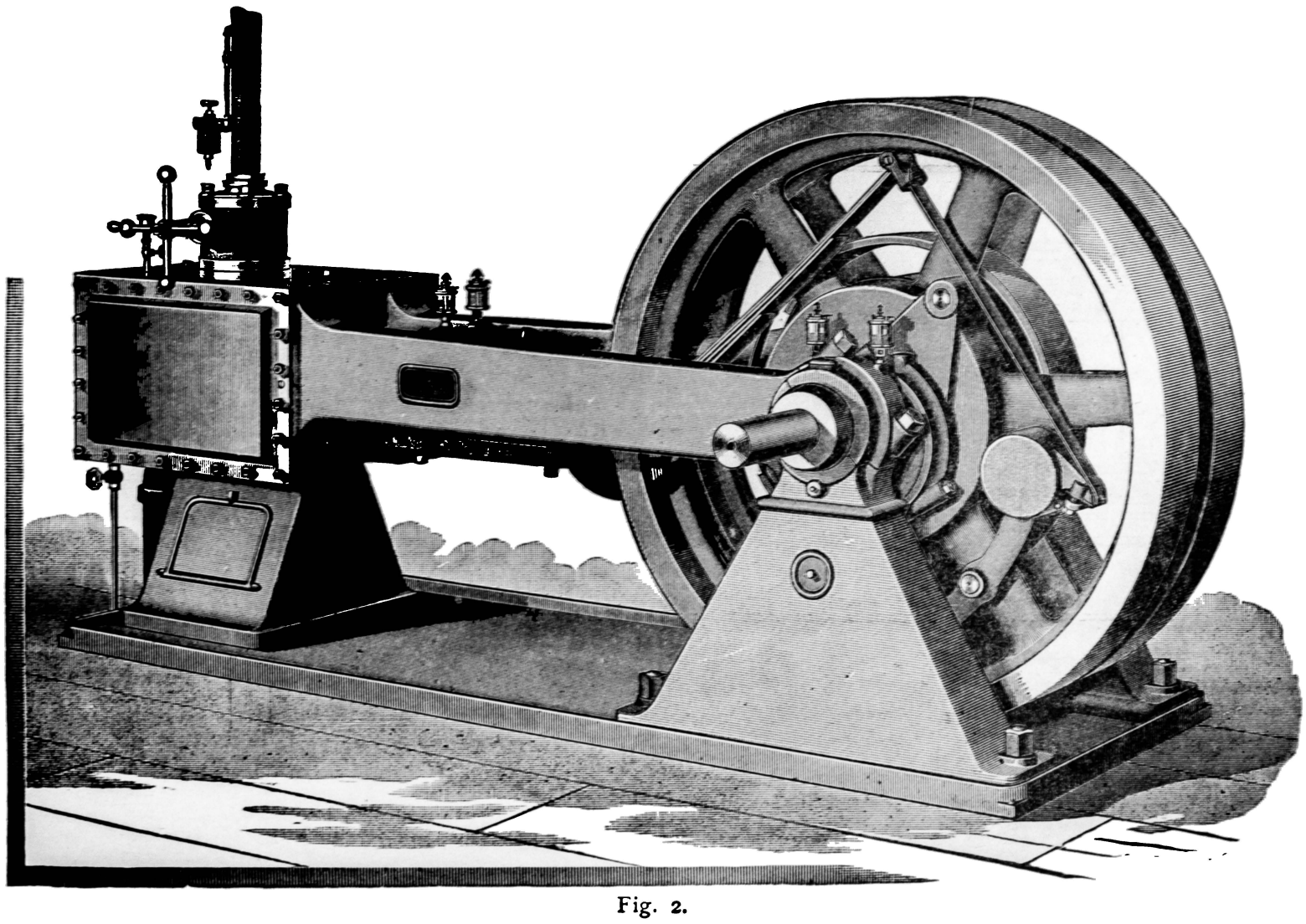

Fig. 2.

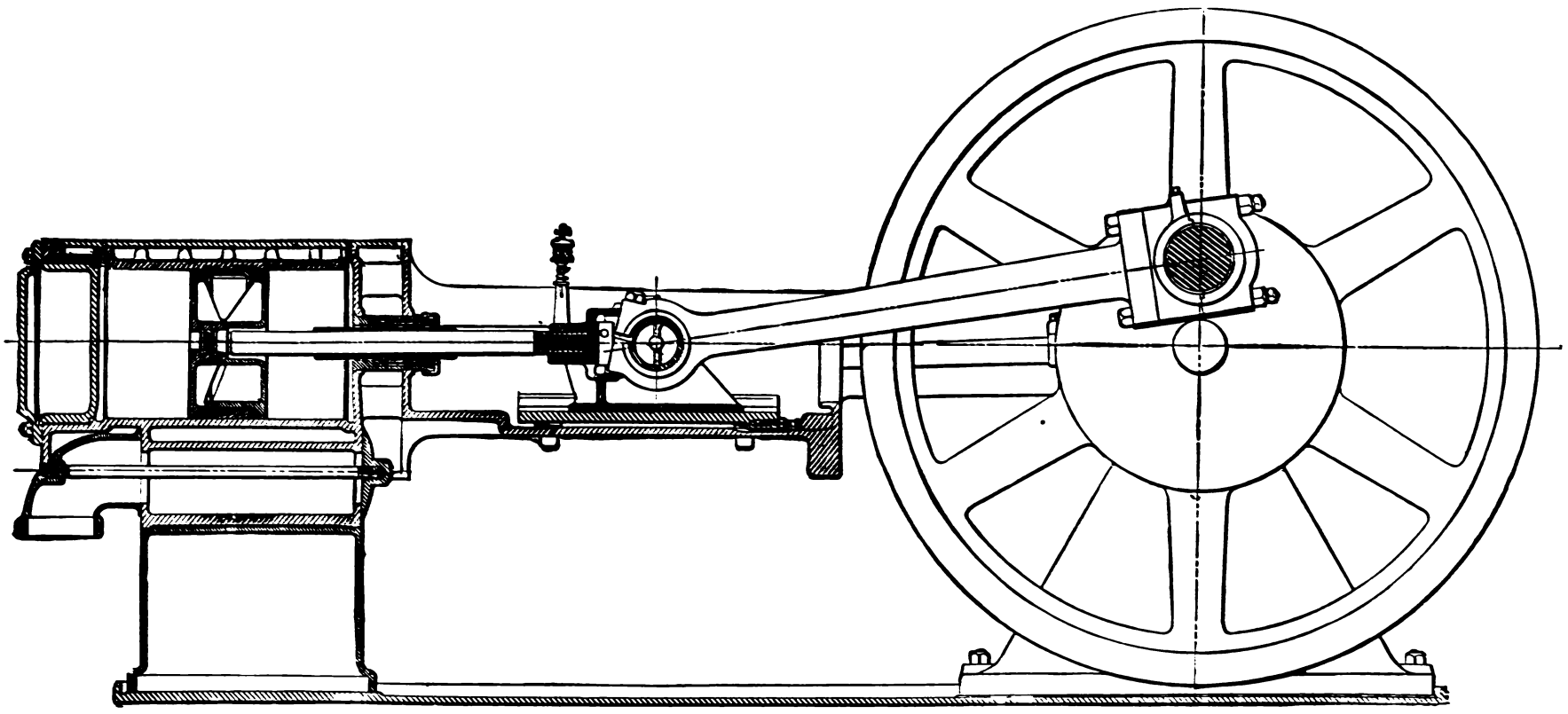

Fig. 1.

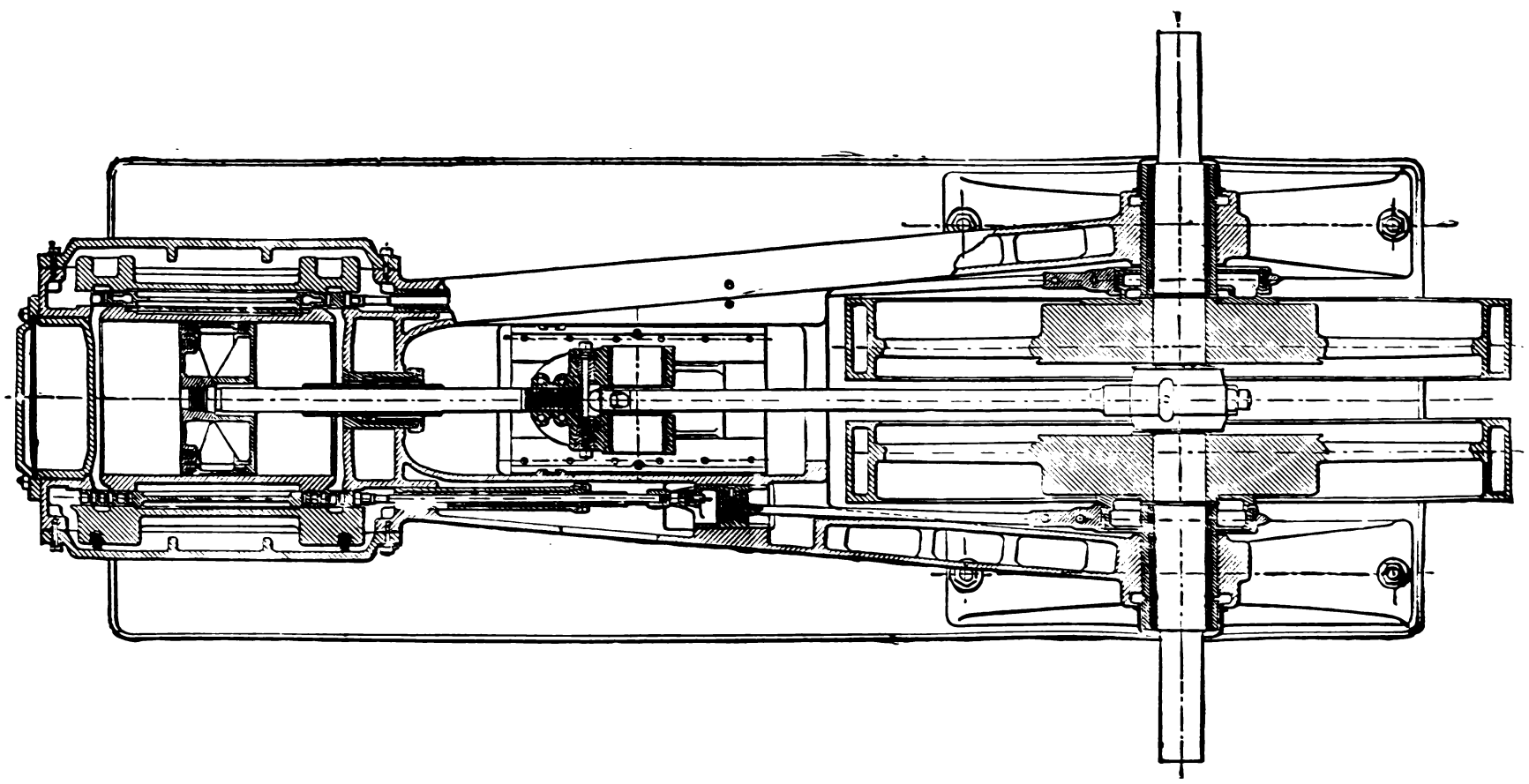

Fig. 2.

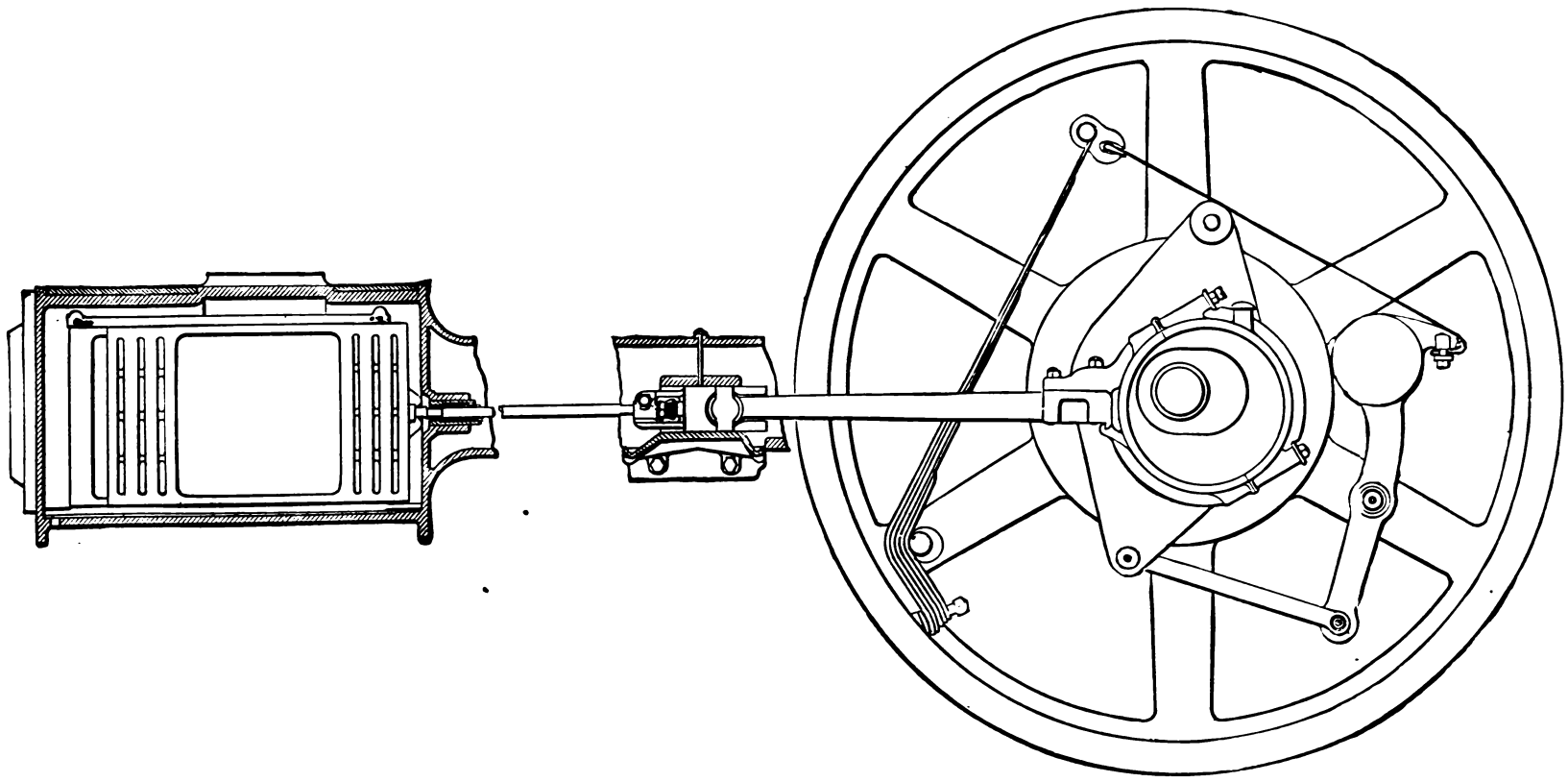

Fig. 1.

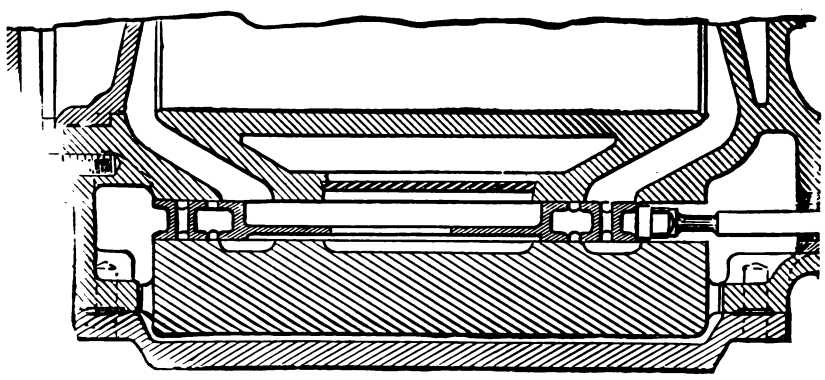

HORIZONTAL SECTION THROUGH THE VALVE.

Fig. 3.

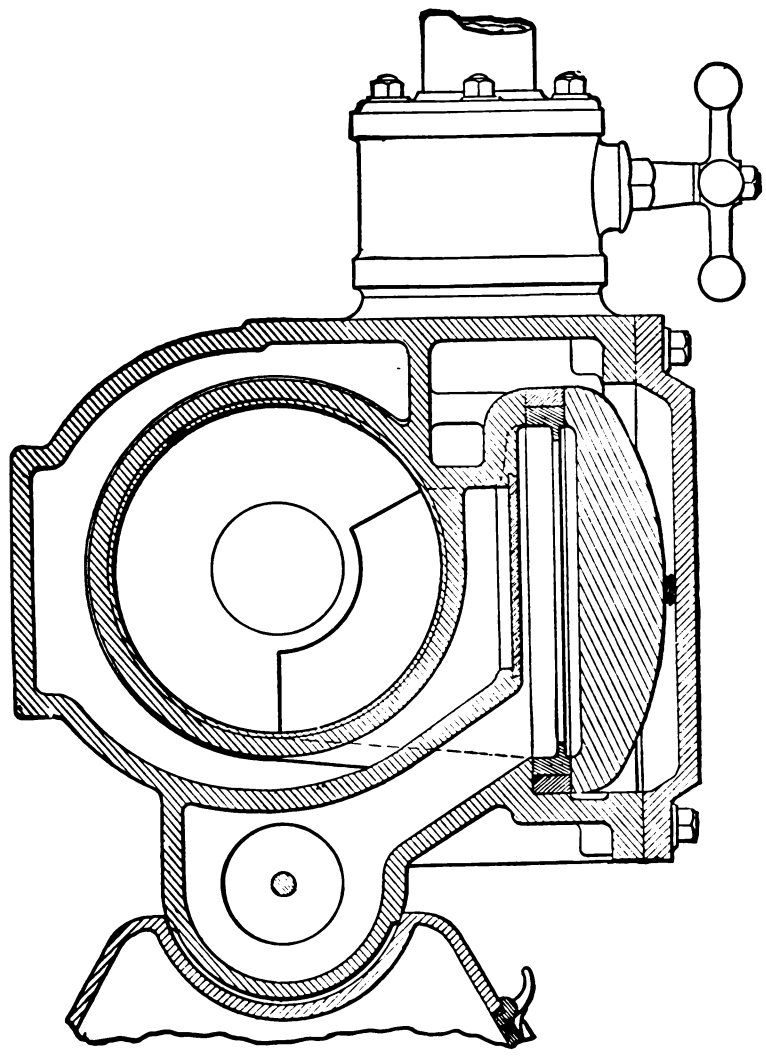

VERTICAL SECTION.

Fig. 2.

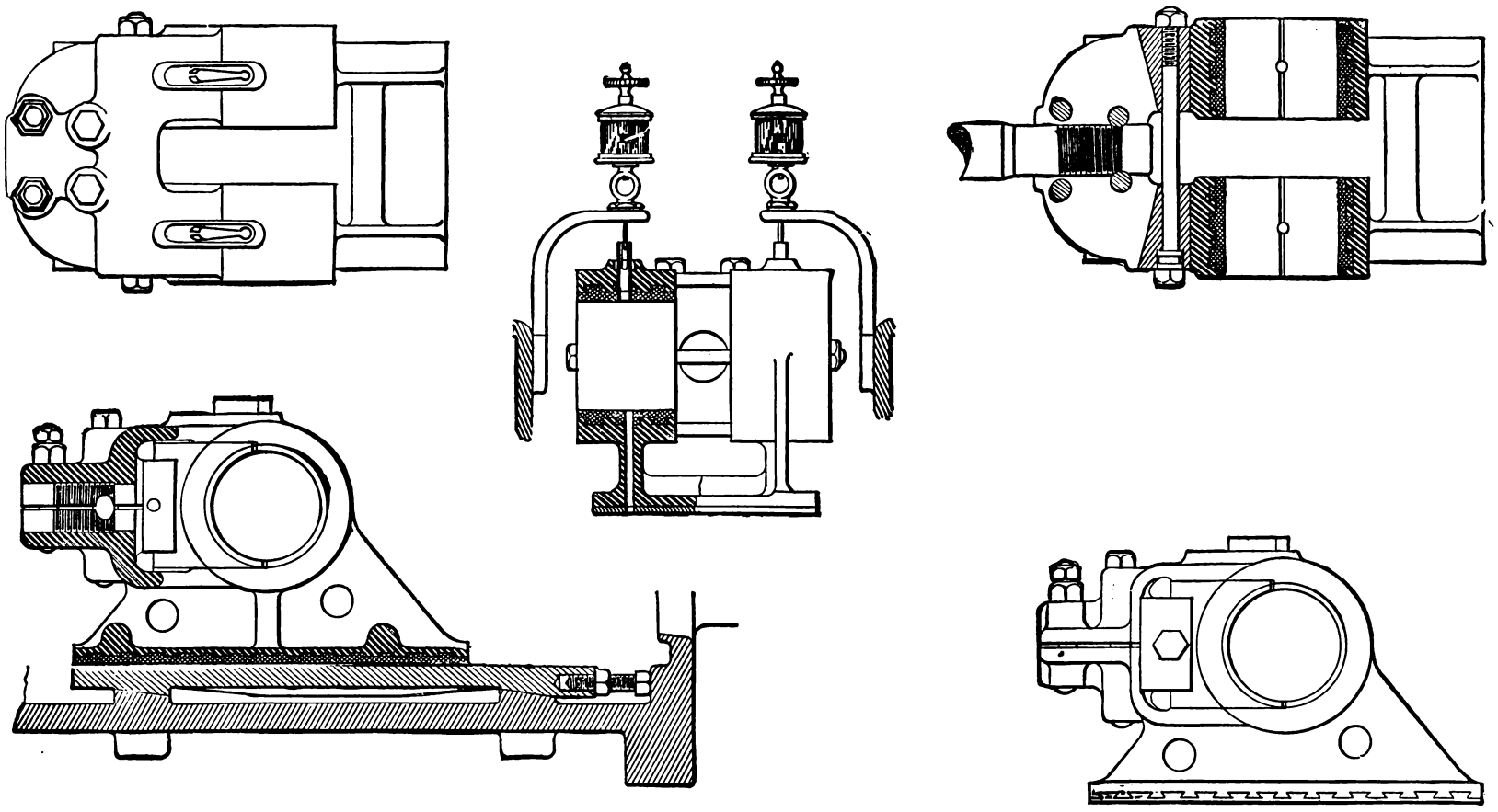

CROSSHEAD
Fig. 1.

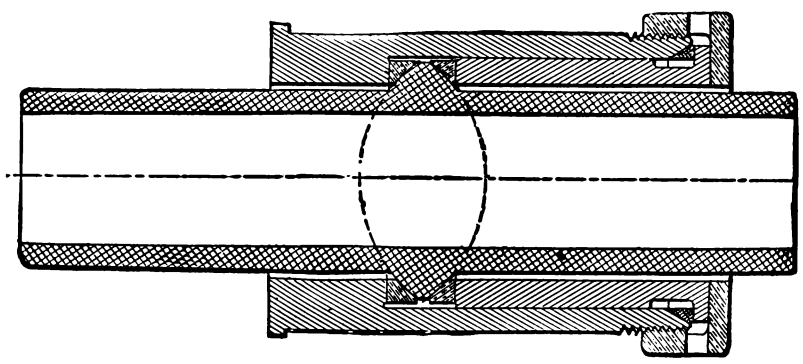

PISTON ROD PACKING.
Fig. 2.

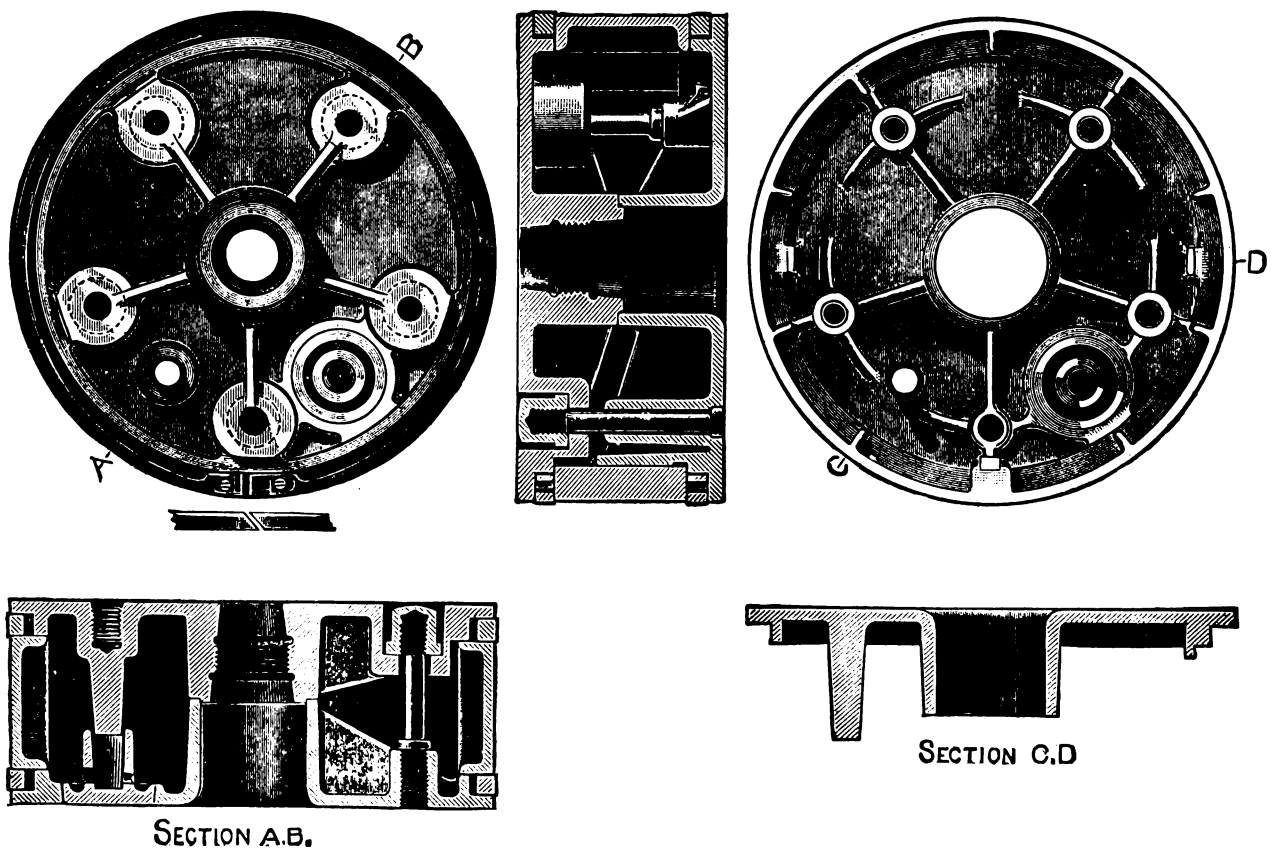

POP PISTON.
Fig. 3.

and shot. Being heavy, located some distance from the centre of the wheel, and running at a high velocity, it has great centrifugal force and requires a strong spring to resist it. This forms a powerful governor.

The pin upon which the ball swings is secured to an arm of the flywheel and is hardened and ground, and the arm of the governor ball is bushed. A large hole is bored in the centre of the pin and plugged at the outer end, forming an oil chamber; small holes drilled from this chamber to the wearing surfaces insure thorough lubrication.

The metal band connecting the governor ball to the spring is for the purpose of reducing the number of pieces, avoiding friction, and relieving the central pivot of a large part of the strain.

Unless a shaft governor is practically balanced, the unbalanced weight will constantly tend to move the whole system more or less at each revolution, which tends to wear the joints, and under certain conditions disturb the adjustment of the valve.

The speed of the engine can be changed to a slight extent by increasing or reducing the amount of shot in the ball.

The valve motion has two peculiarities—the position in which the eccentric plate is pivoted to the wheel, which gives a variable lead to the steam admission, and the direct connection between eccentric and valve. The valve rod slides are of unusual length and large on their wearing surfaces, with provision for compensating for wear, and the connections are hardened and ground steel bushings, interchangeable, both in rod and on the pins, so they can be renewed and the joint made new. The method of securing the slide to the valve rod is shown in the cut. This delicate adjustment maintains absolute alignment and absolute security, except from breakage. The method of securing the rod to the valve admits of the valve being removed and returned without disturbing the adjustment. The valve-rod packing is simply a long Babbitt sleeve made in duplicate.

In the single-valve engines with the cut-off controlled by a shifting eccentric, the most desirable results are not accomplished. As the cut-off occurs earlier, the compression is too great and the release too early, and when taking steam nearly to full stroke the compression is too little. In our arrangement, these difficulties are, to a large extent, neutralized by so locating the pivot on which the eccentric swings, as to give a more positive lead when the engine is taking steam three-quarters to seven-eighths of the stroke and a negative lead at the short cut-off. This reduces compression and retards the exhaust. In the double-valve engine the variable lead also becomes desirable, because, as expansion runs lower with short cut-off, the time and resistance of compression has more influence in arresting the motion of the reciprocating parts, and less lead is required than when the steam is released at a higher pressure.

The valve, Fig. 2, Plate XXVIII., is a rectangular plate, quite thin, and with five openings through it. It is made flat on its two sides and is of uniform thickness. The valve works within an opening formed by the valve seat and a pressure plate and two distance pieces placed above and below it. The pressure plate has recesses in it opposite the ports in the valve seat, and the distance pieces are made about two one-thousandths of an inch thicker than the valve. The pressure plate, resting against the distance pieces, relieves the valve of all pressure, and it works within its opening the same as a piston valve. By the recesses in the pressure plate, and the small openings through the valve, double ports are opened, both for steam admission and exhaust. The valve being thin and the distance pieces being exposed to the steam the same as the valve, no trouble is experienced by having the valve bind by expansion. Over-pressure by water in the cylinder at starting is relieved the same as by a slide valve lifting from its seat, and while the valve is liable to wear down by riding on the lower distance piece, it does not open a leak over the top, as is the case with the piston valves. An allowance of about one-sixteenth of an inch is made between the valve-rod coupling and valve for the valve to wear down, after which, as wear occurs, the lower distance piece can be raised up by thin packing pieces, so as to restore the valve to its original position.

As wear occurs, it is but the work of an hour or two to reduce the distance pieces and maintain a steam-tight, free-working valve. The advantage of a balanced valve is not simply that of avoiding the loss due to friction (thus preventing wear), but it admits the use of a large valve and a large travel, giving ample port openings both for admission and release of the steam.

The construction of the piston-rod packing and the crosshead and details of the pop piston are shown in Plate XXIX.

The pop piston is a device designed to prevent the disastrous results incident to a flood of water in the cylinder, which is liable to occur in all steam plants, but more likely to be destructive in engines of high speed and small clearance than in slow speed or in engines with large clearance. We already know of a number of cases where the engines have been saved from breakdowns, which inevitably would have caused delays and several hundreds of dollars of repairs.

The construction of the pop feature above mentioned consists in forcing in tapering plugs from the inside of the piston with such force as to require a pressure of 200 pounds to the square inch to knock them out. In case more water reaches the cylinder than the clearance will admit, these plugs are driven in the piston and the clearance increased to such an extent as will meet the emergency. This does not compel the stopping of the engine, as it may be allowed to run till stopping time without any loss except that due to the extra clearance, after which the plug or plugs are driven back to place and the engine is restored to its original condition—our idea being that until this accident happens, which may be soon or never, the engine is, in all essentials, as simple and the same as if no safety device was introduced. The relief is ample and instantaneous, and neither endangers the engineer nor stops the plant. Provision is made to give the engineer notice and to care for the loose plugs.

The pistons of engines smaller than 10-inch cylinder have rings sprung in, but for 10-inch and above they are as shown, and vary in nearly every particular from all other pistons used. The main characteristic is that the packing rings are what we have designated "limited expansion"; that is, the rings are made much too large for the cylinder, sprung in with considerable force, and pinned in that position, and the outside turned a perfect fit to the cylinder. After this, the pin-holes in the rings are filed to admit of the rings being compressed, while not allowed to expand. These pistons do not leak nor do they cut the cylinder, and, as will be understood, run easier than pistons having their rings forced against the surface of the cylinder. So far, there is no detail that has given us more satisfaction than this new departure in piston construction.

The piston-rod packings are simply Babbitt metal bushings, with reamed holes slightly larger than the rods, so as to be a free sliding fit. They rest in spherical seats, and are free to move in any direction. The bushings are made long and light, and are held in place by a gland and screw cap. They prevent the leakage of steam by their length, as the brief time the piston is making a stroke is too short for the steam to work through. With perfect alignment between cylinder and guides, the piston rods pass through the bushes without contact, and when this is maintained the wear is imperceptible. Under less favorable conditions they wear, but they can be compressed, when worn, so as not to leak until they are worn out.

The crosshead is of steel casting with cast-iron wearing surface on bottom; it is threaded on the piston rod and secured by a half nut and clamped by four binding bolts. The crosshead pin is a hollow steel casting, hardened and ground and made fast to the connecting rod, and turns in two adjustable Babbitt-lined boxes in the crosshead. The object of this is to secure lightness, extra wearing surface, to prevent side swinging of the connecting rod at the flywheel end, and to give ready means of oiling. The long wearing surface of the crosshead adds greatly to its easy running and durability.

When finished, they are scraped to the surface plate and made parallel with the piston rod, and the crosshead pin is scraped in its bearings until it is positively level and square.

The crosshead is what is known as the slipper-guide sort, the lower guide being adjustable in the vertical direction in a novel way. It rests and is bolted upon two inclined planes. By loosening the bolts and adjusting the screw at the end, the crosshead

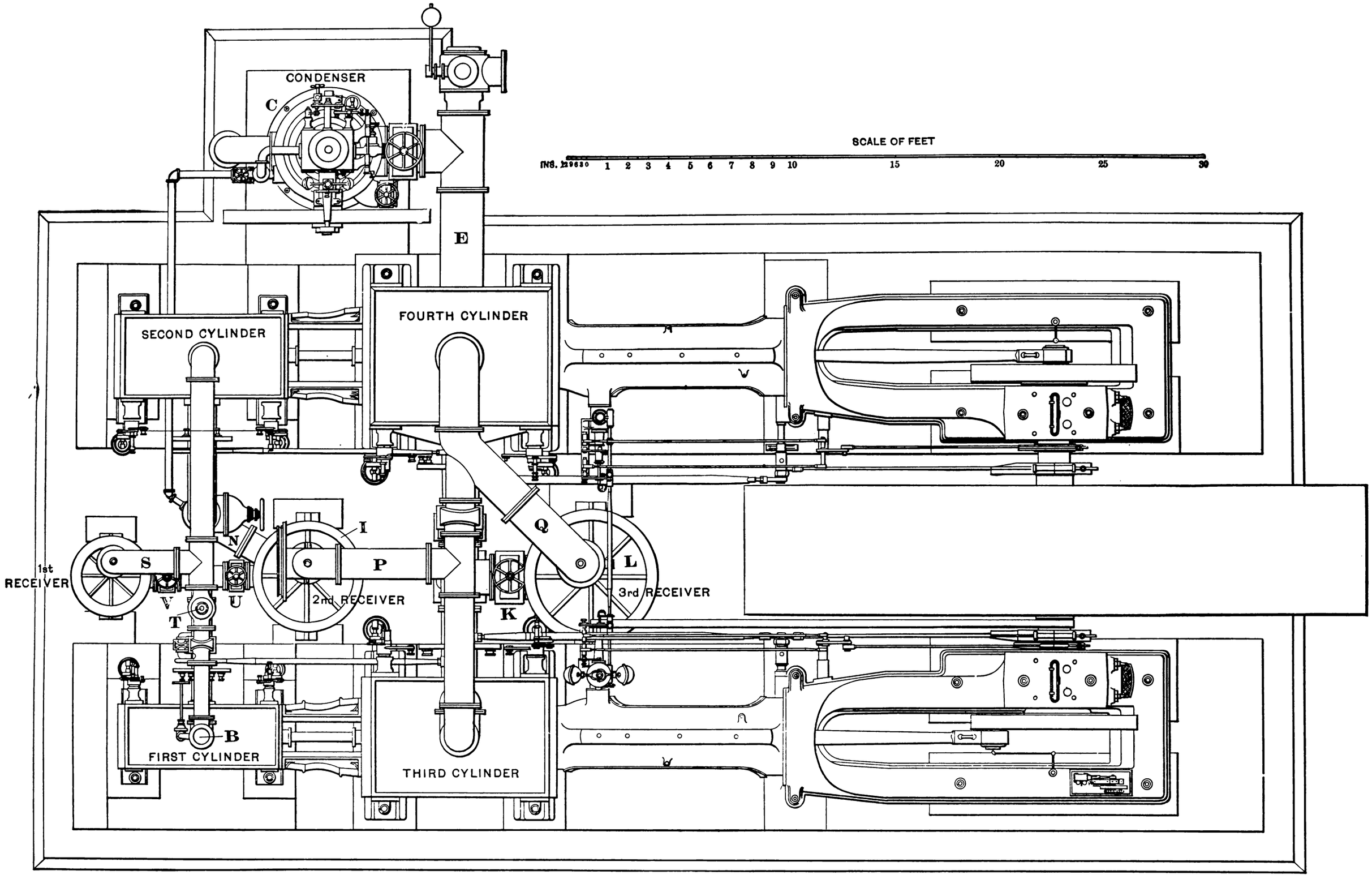
CONDENSER
C
SCALE OF FEET
INS. 129630 1 2 3 4 5 6 7 8 9 10 15 20 25 30
E
SECOND CYLINDER
FOURTH CYLINDER
I
N
Q
S
P
L
1st RECEIVER
V
U
2nd RECEIVER
3rd RECEIVER
T
K
B
FIRST CYLINDER
THIRD CYLINDER

Fig. 3162.

may be readily raised or lowered to bring the piston rod in perfect alignment.

The method of oiling is by two fixed sight-feed oilers without wicking. The oil from the metal points is taken off by metal channels and conveyed to the crosshead pin, from which the drip is conveyed to the lower guide, and all waste oil and water are retained in the basin or conveyed away in an overflow pipe.

ALLIS ENGINE. — A 3,000 horse-power quadruple expansion engine designed and constructed by the E. P. Allis Company, of Milwaukee, Wisconsin, to furnish the greater part of the motive power at the Columbian Exhibition of 1893, affords an excellent example of an engine possessing the capability to very greatly vary the power of an engine to suit exceptional conditions with economy throughout an extended range of motive power, the construction being illustrated in the figures from 3162 to 3165*b*, as follows :

The cylinders are respectively 26, 40, 60, and 70 inches, with stroke of 72 inches. This engine is arranged as a pair, the left-side engine consisting of the 40 and the 70 inch cylinders placed tandem fashion with the larger cylinder near the crank, and the right-hand engine consisting of the 26 and 60 inch cylinders similarly arranged. The fly pulley is 30 feet in diameter and has a face of 76 inches, carrying a pair of belts 72 inches wide superposed. The two engines being set with cranks at 90 degrees, it follows that receivers are desirable between each two cylinders. The course of the steam is as follows : From the boiler pipe B to cylinder 1, see Figs. 3162 and 3163. Thence by the exhaust pipe through the valve V to the first receiver R. From this receiver it passes to the pipe S to No. 2 cylinder, and exhausts by the pipe N to the intermediate receiver I, from which it enters No. 3 cylinder through the pipe P. It then escapes to the third receiver L through valve K, and on by pipe Q to No. 4 cylinder, whence it escapes by the exhaust E to the independent air-pump and jet condenser C. The pump cylinder is 36 inches in diameter by 16 inches stroke, and it is more clearly shown in Fig. 3163. The actual coupling up of the pipes is a little more complicated, owing to additional valves such as V, which admits steam, if desired, from No. 1 cylinder into the second receiver I, to admit live steam

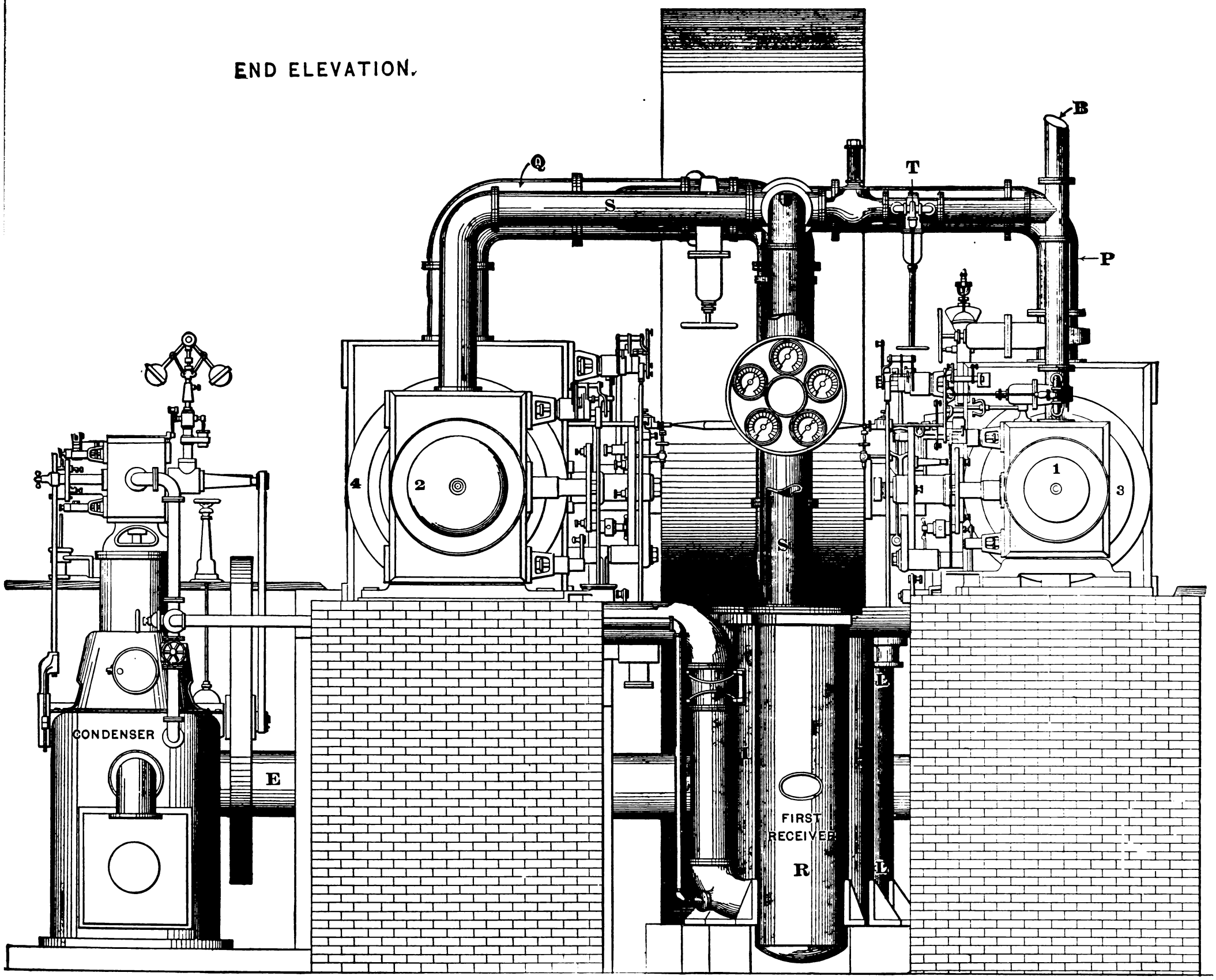

Fig. 3163.

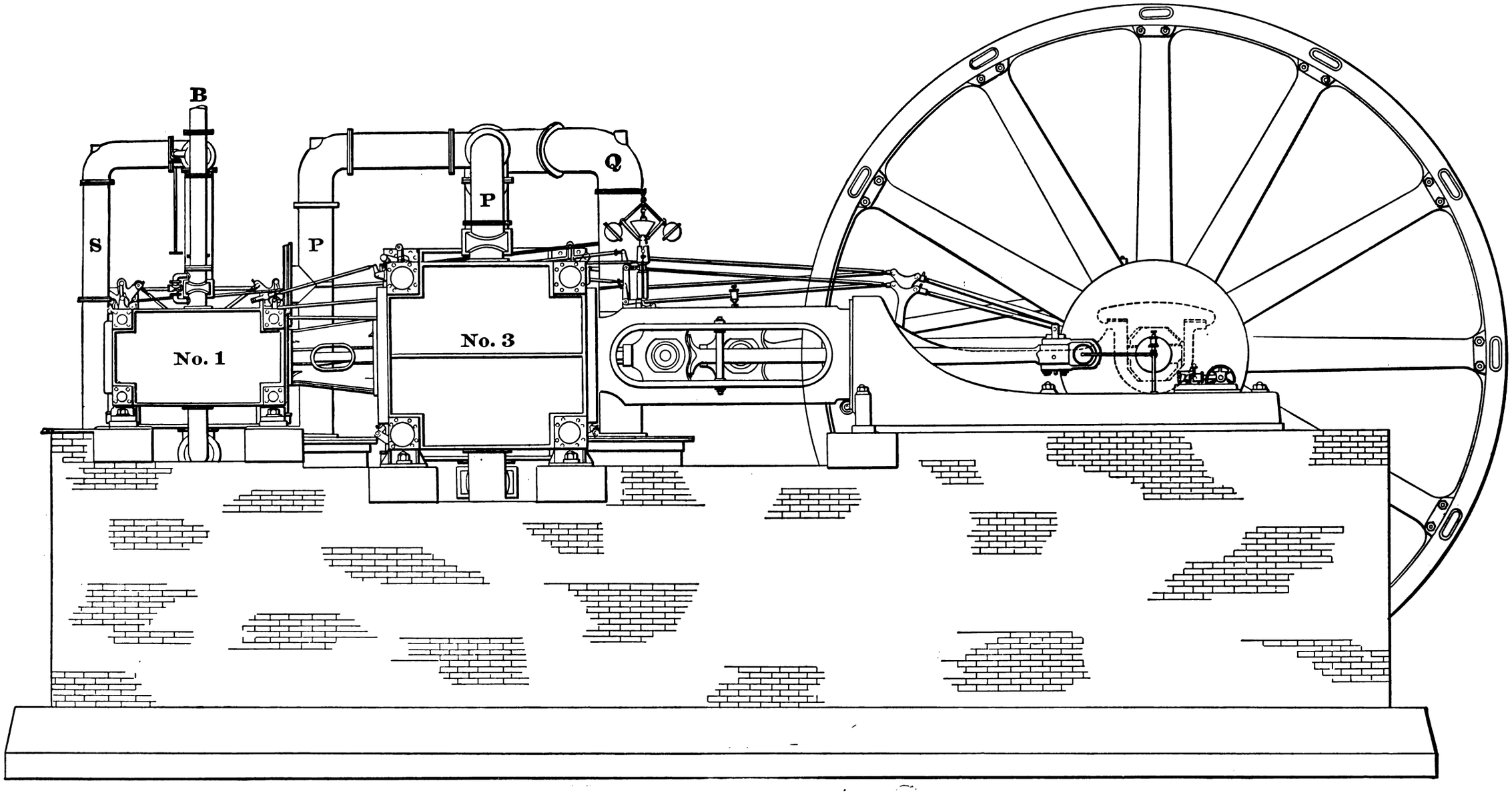

Fig. 3164.

when it is desired to do so; but in ordinary working this valve would, of course, be kept closed.

The valve at T would similarly admit boiler steam to No. 2 cylinder to turn the engine off its centre, if the right side crank happened to be so placed and the engine at rest. The initial steam pressure is 180 pounds, and the cylinder ratios, neglecting the piston rod areas, are 1 : 2.36 : 5.32 : 7.24; ratios as moderate as are commonly found with triple-expansion engines.

The valve motion, though essentially Corliss, embodies a modification of this by means of which the cut-off may be varied by the governor from nothing to eleven-twelfths of the stroke. This will be understood by reference to Figs. 3165 and 3165*a*.

In Fig. 3165 we have a view of the right-hand side of the engine —see Fig. 3165*b* for enlarged view of cut-off. First there is the usual Corliss motion, which is derived from an eccentric and transmitted to the wrist plates in the usual manner, as indicated. There is, in addition to this, a cut-off eccentric to which the eccentric rod *h* is attached; this giving motion to the rocker arm shown, to which are attached the two connections *g g*; these in turn moving the rocker arms *f f*, to the upper extremities of which are pivoted the triple-armed levers or bell cranks *d d*. The horizontal arms of these two levers are attached by a vertical connection to the governor, this connection being by a link which permits the rocking motion of the levers *d d*, while at the same time it turns these upon their pivots in the upper ends of the rocker arms *f f*, thus advancing the upper or lower arms of the levers *d d* to vary the cut-off. The connections *o, o, o, o*, running back to the steam valves, operate in the manner indicated in Fig. 3165*a*, the rocker arms seen at the rear of the large cylinder, Fig. 3165, being merely to reduce the length and, consequently, the necessary diameter of the connections to the rear cylinder.

Referring now to Fig. 3165*a*, we see that the wrist-plate connection operates in the usual way to move the hook E, which is detached by the knock-off cam in the usual manner as indicated, this knock-off cam being also upon a knock-off lever G seated upon the bonnet in the usual way; but instead of this lever having only a slight motion due solely to the action of the governor, it has a regular motion about the hood which is derived from the cut-off eccentric, the connection *o*, before referred to, being attached to the lower end N of the lever K, which is pivoted at L, there being a second arm to this lever, K′, which is shown at the left of Fig. 3165*a*, and carries at its lower extremity a sliding block, which engages with a slot in the knock-off lever G. The result of this arrangement is that the knock-off cam is made to travel about the hood in such a manner that it is always near the tripping lever of the hook, and is thus ready to act at any part of the stroke determined by the governor in the manner indicated, and thus greatly extending the range of the cut-off.

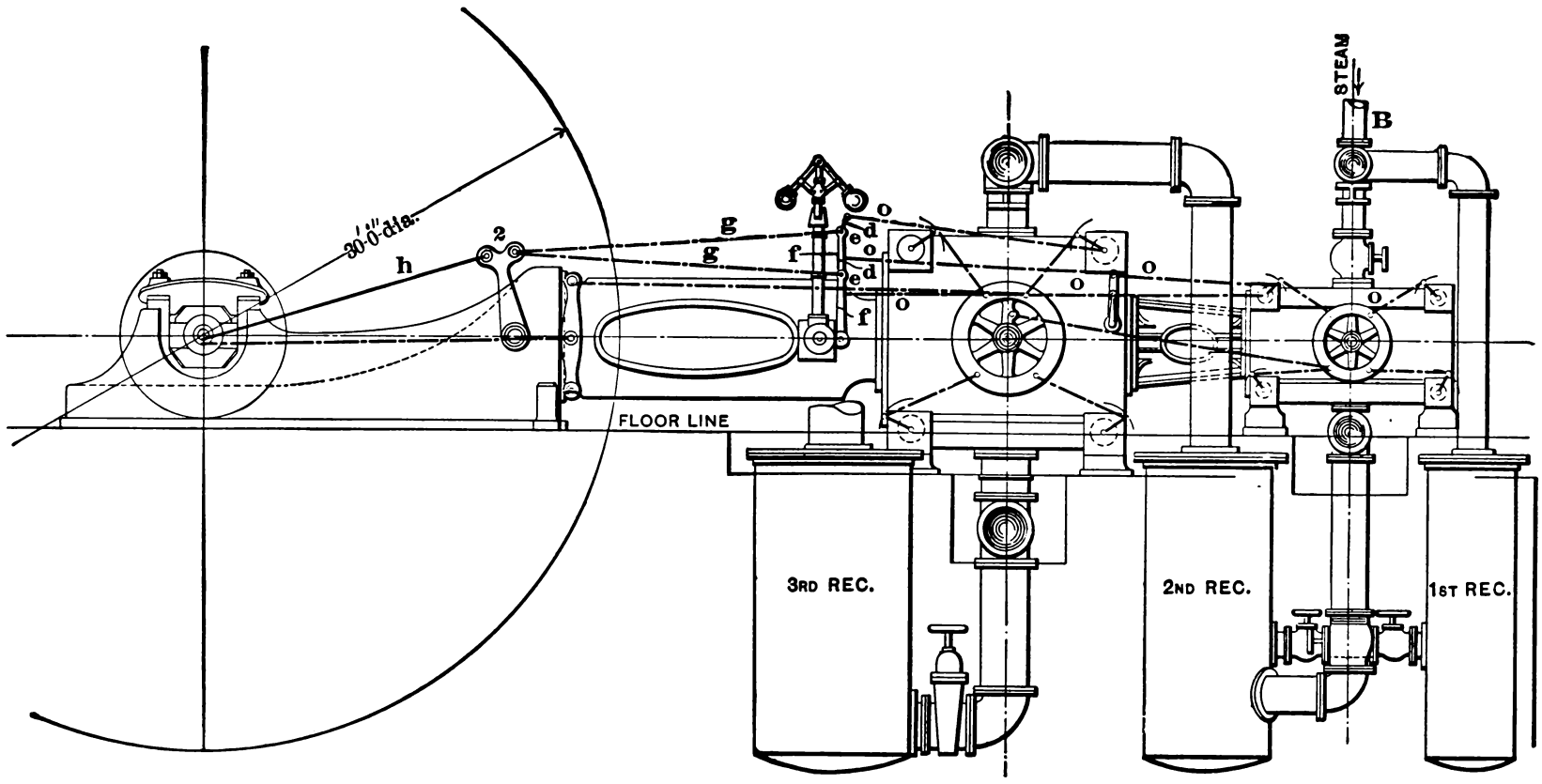

Fig. 3165.

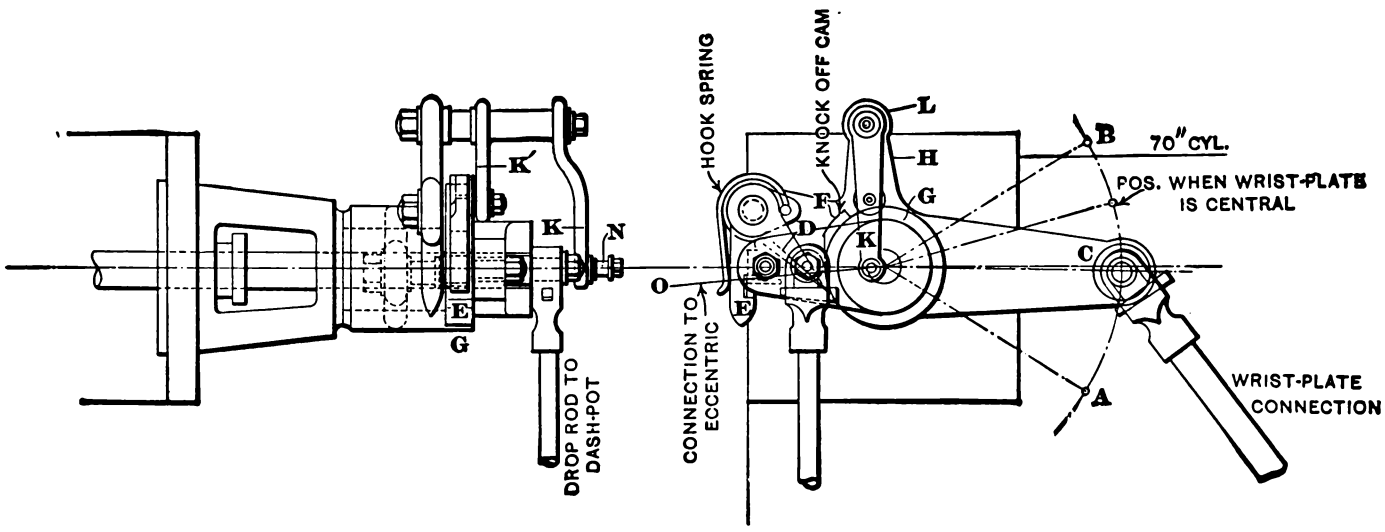

Fig. 3165*a*.

To recapitulate, and referring again to the general illustrations, Fig. 3163 is a plan, Fig. 3164 a left, and Fig. 3165 a right hand side elevation. The exhaust from first to second cylinder passes under the floor half-way, and then rises vertically through a live-steam-jacketed receiver. As seen in the plan, that from second to third cylinder passes underneath diagonally to a similarly cen-

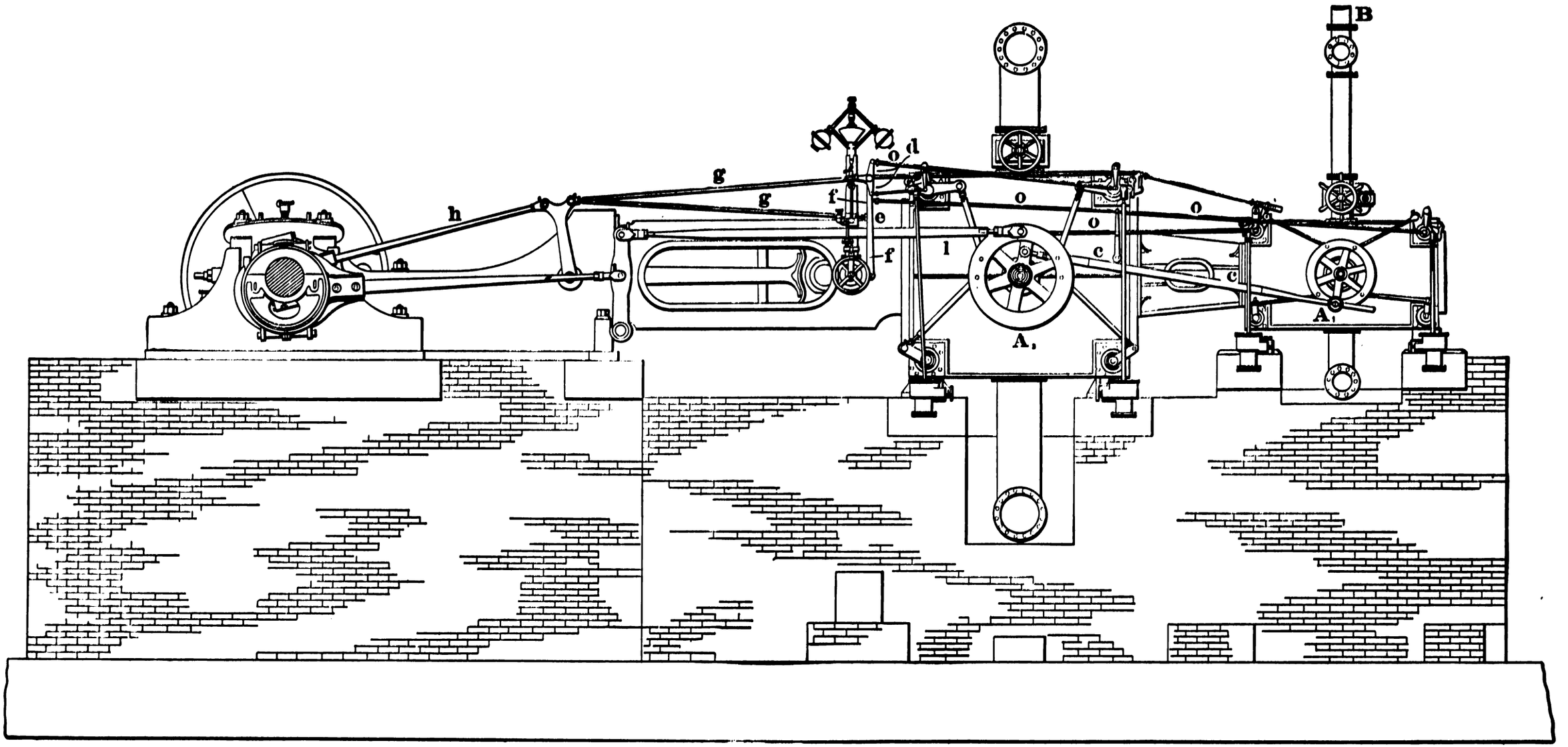

Fig. 3165b.

trally placed receiver, also jacketed with boiler steam, through which it rises vertically, and then follows a line parallel to the centre lines to join a branched overhead pipe. To the left of the junction is inserted a stop valve, by means of which the steam may be either passed through the third and fourth cylinders in series, making the engine quadruple expansion, or else may be split and sent through the third and the fourth cylinders in parallel, making the engine triple expansion. The exhaust from third to fourth cylinder takes a similar course, first under the floor, and then rising through a reheating chamber at the centre line of the engine. It then follows an oblique overhead path, joining the cross pipe already mentioned beyond the stop valve. This exhaust pipe is, of course, shut off when triple expansion is used. In this third intermediate receiver the jacketing steam is throttled down to 50 lb. by passing a reducing valve.

The receivers are best seen in outside view in Fig. 3165; the end elevation. All three are of the same general construction, which is unusual. An upright cylinder is divided into three chambers by two cross diaphragm plates cast with the body. The upper and lower chambers are connected by vertical tubes expanded into the cross plates, after the style common in surface condensers. The jacket steam is admitted into the middle chamber, in which it surrounds and heats the tubes inside which the steam passing from one to the next cylinder flows upward.

The condenser is seen in end elevation, Fig. 3163, standing to the left hand of the engine. In this case the condenser is made by the makers of the engine. It is Reynolds' patent, and is an "independent" injection jet condenser. The condensing chamber forms an annular space surrounding the air pump, both inner and outer cylinders being vertical, with the steam cylinder set on top of them. The common stroke of steam piston and pump bucket is 16 inches, while the diameters of steam cylinder and pump are 16 inches and 36 inches. The vacuum obtained with 120 pounds boiler pressure and full engine speed is about 26½ inches of mercury. The exhaust pipe has 24 inches internal diameter, while that of the steam pipe is 8 inches. These and all the connecting pipes are covered with so-called "magnesia."

Both sides and ends of all four cylinders are jacketed. Live steam is introduced into the jackets of the first and second cylinders. It passes from the high-pressure cylinder jacket to that of the third cylinder; and in the jacket of the fourth cylinder meets the two overflows from the jackets of the second and third cylinders; these, however, being reduced to 50 pounds per square inch pressure by a reducing valve before entering this last jacket. Apparently, the object of this throttling is to evaporate some of the condensed water formed in the other jackets. The cylinders are also lagged with hair felt, encased by polished sheet steel.

The flywheel has twelve arms, is built in segments, and weighs about sixty-seven tons.

The crankshaft is 21 inches in diameter in the wheel boss, and 17 inches at the journals, which are 28 inches long. The caps of the main bearings are horizontal, and the box, or "shell," is made in four segments, the splits being at 45 degrees to the horizontal and vertical, but running on parallel lines, so that the side segments have parallel top and bottom surfaces, enabling them to be set in horizontally for wear by set screws. These shells are of cast iron, lined with hard Babbitt metal.

Both crankpin and crosshead pin are 9 inches diameter by 9 inches long. The former has a brass box, Babbitt lined, while the latter has a plain brass bearing. The connecting rod is turned and swelled in the centre, its crank end being strapped according to common design, while the crosshead end is solid. The crosshead is of cast iron of great depth, necessitated by the long stroke, and has wedge-shaped slippers or shoes of cast iron, with a lining of Babbitt metal on the bearing surfaces.

All the pistons are of cast iron, of the common plain hollow pattern. They are each packed by a single cast iron ring, pressed out against the cylinder surface by three low springs. The rings are scarf-jointed at the splits, a brass tongue-piece being let in to cover each side of the split.

An ordinary vertical spindle Porter governor controls the cut-off in the first and third cylinders. A hand control of exactly the same pattern is applied to the cut-offs in the second and fourth cylinders. This control and the valve gear generally are illustrated in Fig. 3165*b*. There are two eccentrics for each side of the engine; these lying, as may be seen in Fig. 3162, between the main bearing and the flywheel. One of them is large, while the one that performs the cut-off controlling work is small. The main or large eccentric drives the two wrist plates A 1, A 3 in reverse directions through a rocking lever *l*, and a connecting rod *c*, between the plates. The exhaust valves are operated in the usual manner. The small eccentric operates the admission valves by pawl hooks mounted loose on the valve stems, and the hardened steel catch plates on these engage with similar plates on a boss keyed to the valve stem, the pawl hook being pushed out, and the valve tripped by cams on the "trip hub," this latter being also loosely mounted on the valve spindle.

The cams on the trip hub are of hardened steel. The trip hub is oscillated to and fro by the small cut-off eccentric acting through the rods *h*, *g g*, *o o*. These two series of rods do not form two direct chains of links, but act through a block in a lever link, the position of the block in the link being directly controlled by the governor, which thus changes the range of oscillation of the trip hubs according to the speed of the engine. The action is such as to make the cam on the trip hub recede, or run away from, the pawl hook which it has to release, and the larger the range of this receding motion the later does the release take place. The action essentially depends upon the cut-off eccentric being set on the shaft in advance of the main eccentric, and it is very much altered in character by small changes in this angular advance.

The trip hub carries a second cam, which comes into action if the governor belt breaks, or if by any other means the governor loses control, and the balls fall in. When this happens, this second cam holds the pawl hook entirely away from the trip plate on the valve stem, so that this latter is not caught by the hook; the valve is not opened, and no steam is admitted.

A Triple-Expansion Pumping Engine.—A triple-expansion pumping engine constructed by the Nordberg Manufacturing Company, of Milwaukee, Wisconsin, for the water works of Washington, D. C., is illustrated in the following figures.

The general design of the engine is shown in Figs. 3166 to 3204, from which it is seen that it consists of a horizontal triple-expansion three-crank engine, driving three double-acting horizontal pumps, with outside packed plungers, the pumps being coupled to the extended piston rods of the engine.

The steam-jacketed cylinders are respectively 16, 30, 45 inches diameter and stroke 40 inches respectively; cranks being set at an angle of 120 degrees apart, the low-pressure crank leading. The course of the steam is as follows (see Figs. 3168, 3169):

From boiler pipe R into first cylinder; thence through exhaust pipe B to first receiver C; from this receiver through pipe D to second cylinder, and through exhaust pipe E to the second receiver F; from which it enters the third cylinder through nozzle G and then exhausts through pipe H into the surface condenser. The second and third cylinders have a passage cast into the jackets connecting the steam inlet nozzle at the under side of the cylinders with the steam chest at the top of the cylinders.

From the surface condenser the condensed steam is carried through pipe L to the air pump, and from this discharged through pipe N into the hot well, which is located under the condenser.

The feed pump takes its supply from this hot well through suction pipe Q and discharges through pipe R into the closed heater.

The circulating pump for surface condenser take its water supply from the suction main through pipe J, the amount of water being regulated with the valve in by-pass pipe I, delivers through pipe M into condenser, in which, by means of deflecting plates, the water is made to pass through its full length three times; it then passes out through pipe K to the suction main.

The circuit of steam used for the reheating receivers and for the cylinder jackets is as follows:

Steam first enters the jacket on the first cylinder; leaving that, enters jacket on second cylinder; leaving that, enters jacket on third cylinder, and passing out through a pipe is carried into the steam separator.

Steam for reheaters is admitted by a valve, and through a pipe

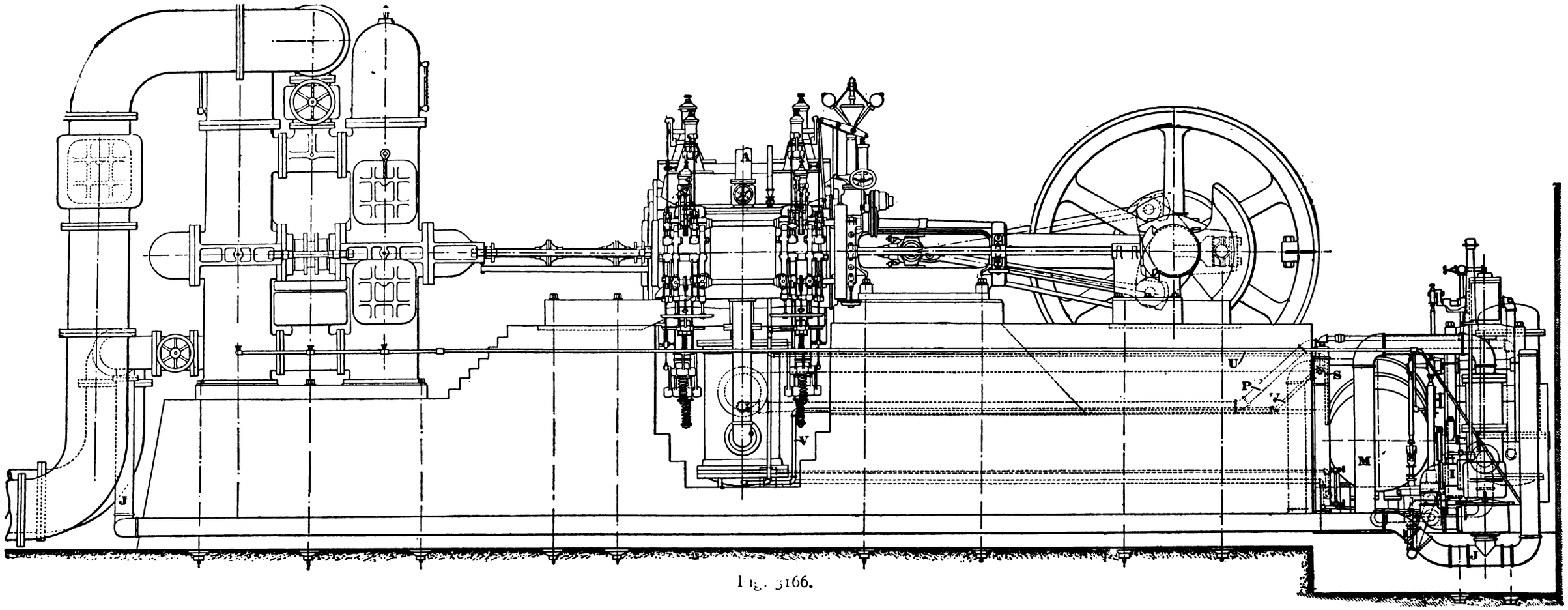

Fig. 3166.

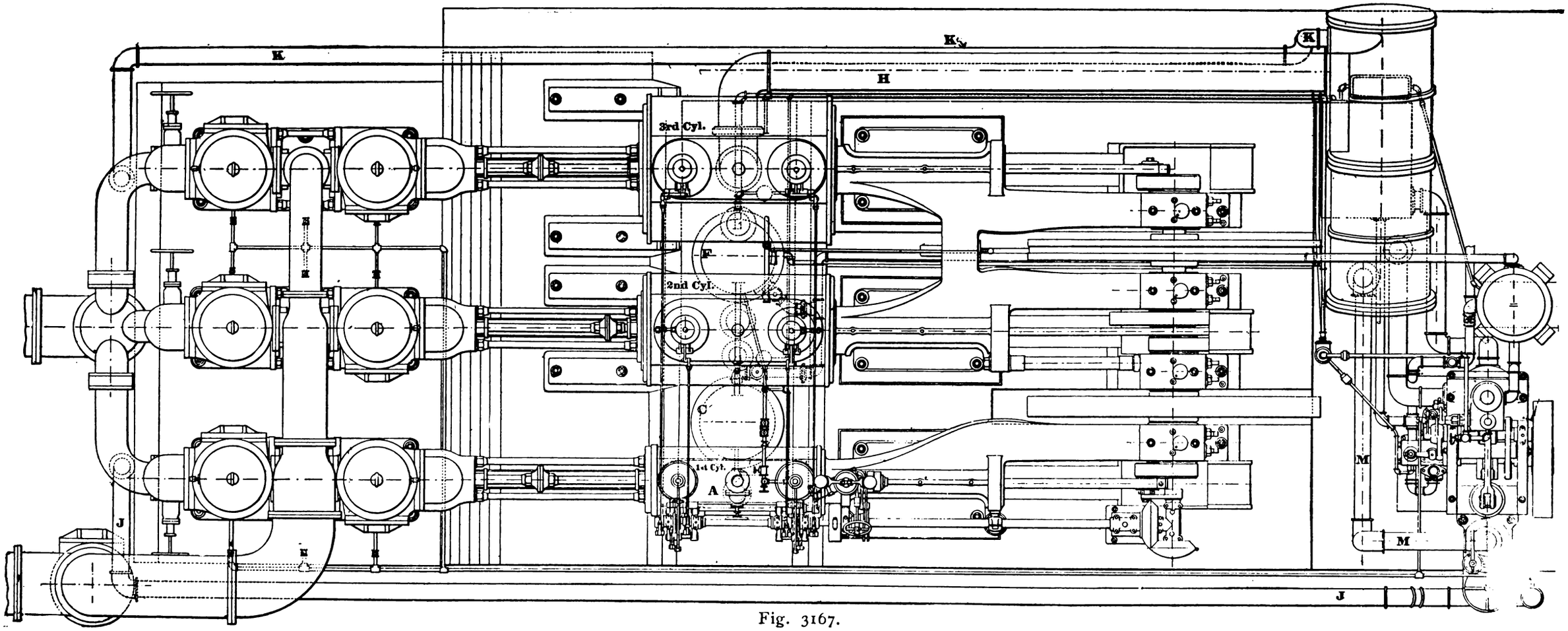

Fig. 3167.

passes into first reheater; leaves same and enters second reheater through a pipe and is then carried to the steam separator S, Fig. 3166. Another drain pipe from the second reheater is carried upward and forward to the separator S, and enters it at the same point as the jacket drain pipe V.

From this separator S is taken the steam necessary to run the auxiliary pumps consisting of: air pump, circulating pump, feed pump, jacket drain pump, and an air compressing pump. Steam pipe T (3168) leads to the steam cylinder, and the pipe O takes the exhaust from this cylinder to the heater. Pipe P (3166) runs from this heater to both receivers, a check valve being placed on this pipe at each receiver.

All hot water due to condensation in these heating circuits, and for which the separator S becomes a receptacle, is led through a pipe into the jacket drain pump, which discharges the same direct into the boiler feed pipe at a point past the heater; that is, between the heater and the boiler. This connection is not shown in the illustrations.

The drain pipes from the receivers lead into expansion traps exhausting into the hot well by means of a pipe, and the heater drain is taken care of also by a trap to the hot well.

There are valves on the reheater piping to serve the purpose of admitting live steam into the first and second receivers, respectively. There are also discharge pipes to the pump chambers. The piston speed of this engine is 300 feet per minute. The steam cylinders are fitted with equilibrium poppet valves; the inlet valves located above, and the exhaust valves below, the cylinders. All the cylinders are steam-jacketed on barrels and heads, and the receivers are provided with reheating tubes and steam-jacketed bottoms. The receivers are placed below the cylinders, and located so as to make the steam passages between them and the cylinders as direct and short as possible.

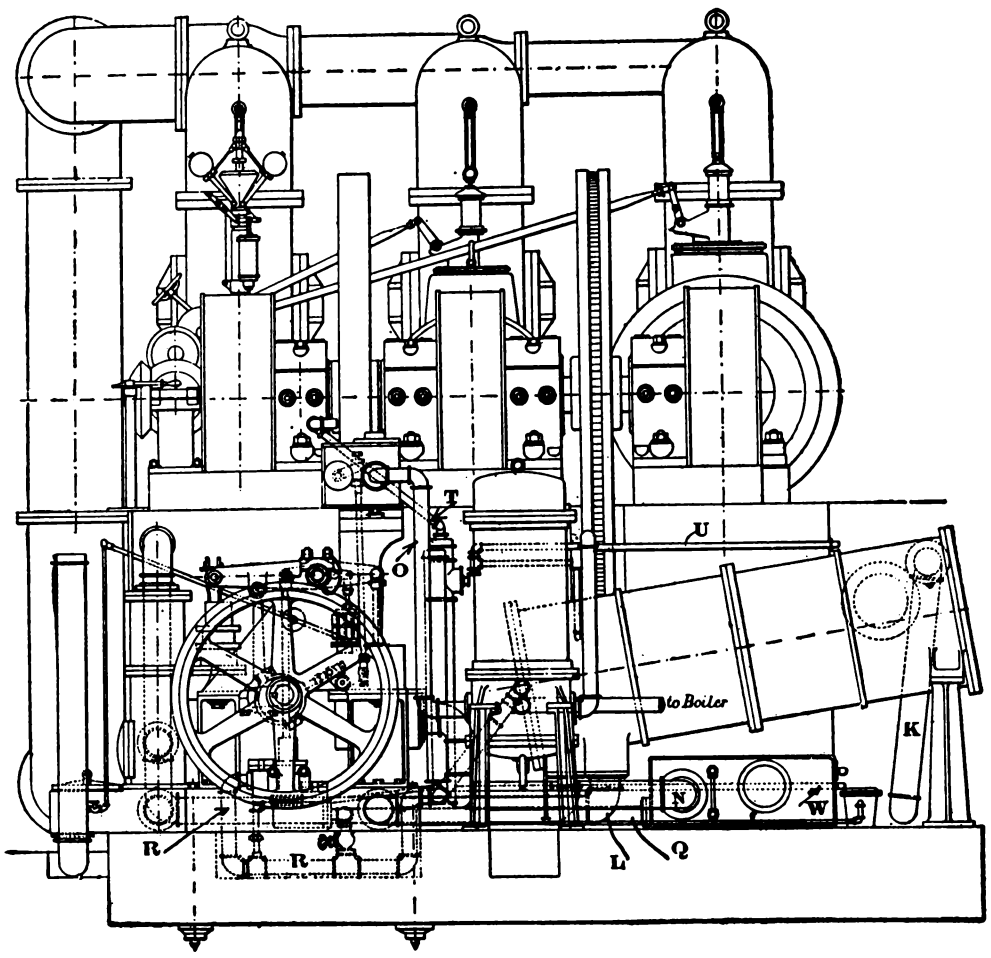

Fig. 3168.

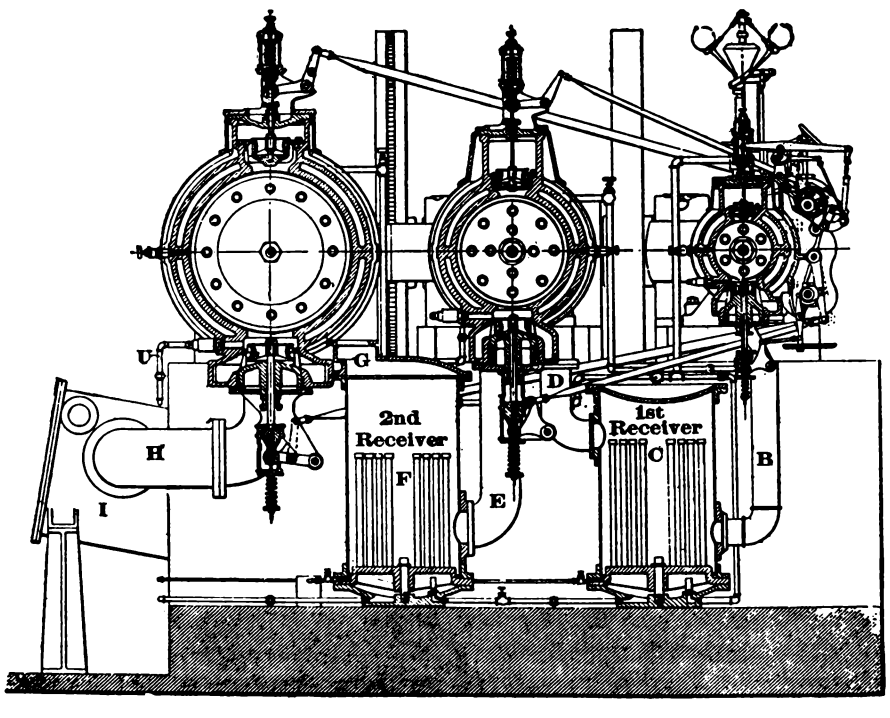

Fig. 3169.

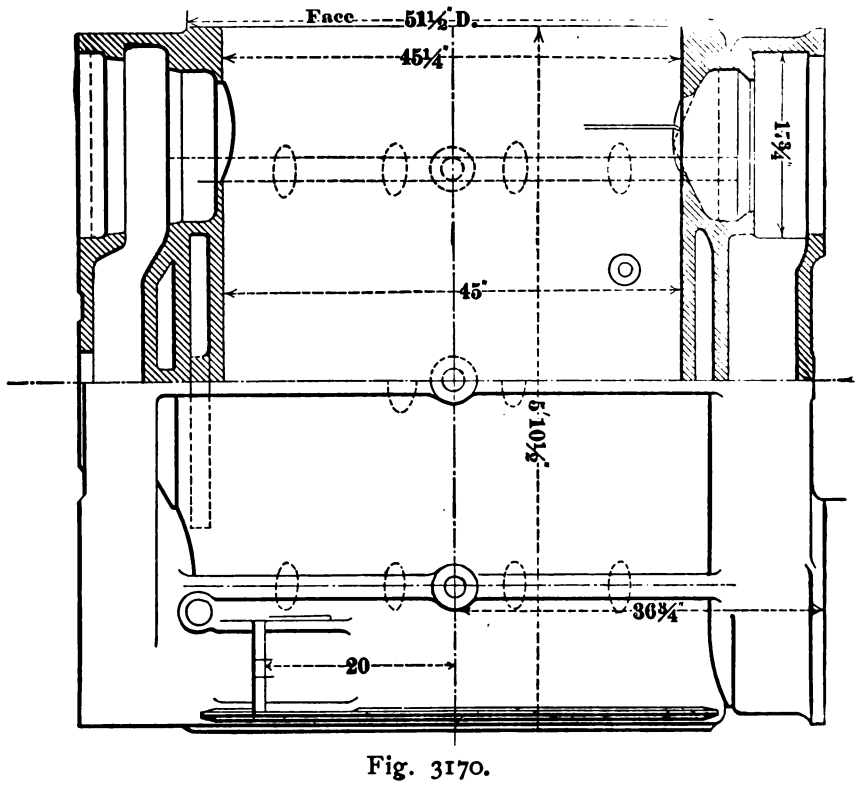

Fig. 3170.

The engine frames are of the girder type, the high and low pressure frames having side cranks, while the intermediate frame is provided with a centre crank, Fig. 3167. The shaft is, however, not built up, but is made in two sections: one carrying the high-pressure crank and one crank for the intermediate cylinder; the other section carrying the low-pressure crank and a second crank for the intermediate cylinder. The crankpin for the intermediate engine is forced into the eye of one of these intermediate cranks, while the other end of the pin is free, and carries a box which fits a slot in the other intermediate crank, Figs. 3171 to 3174. In this manner the two sections of the shaft are independent of each other, to a certain extent, to make up for any slight difference in alignment. There are two flywheels; one on each section of the shaft, Fig. 3168.

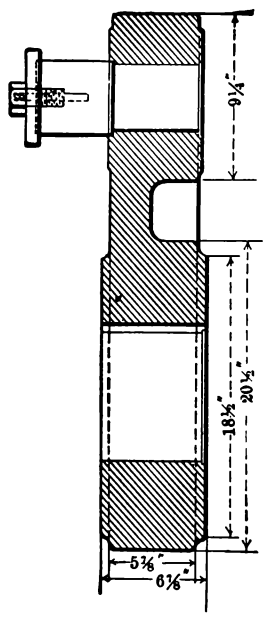

Fig. 3171.

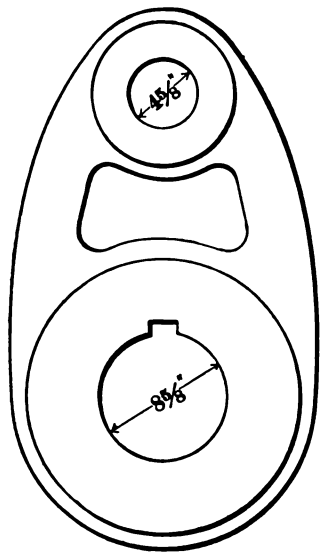

Fig. 3172.

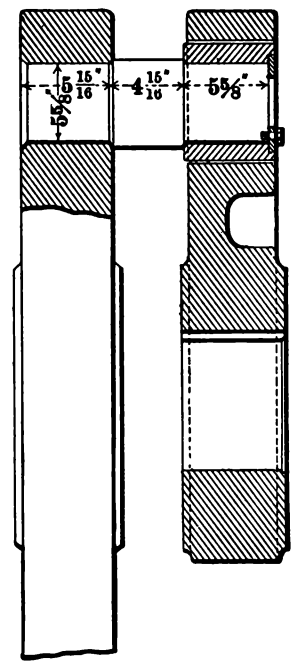

Fig. 3173.

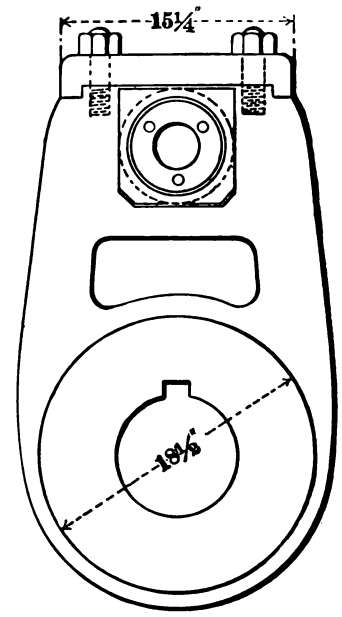

Fig. 3174.

As the room in which the engine had to be installed was limited in width, it was necessary to set the cylinders as close together as possible. The arrangement was, therefore, made to drive the valve gear from the high-pressure side; that is, to have all the lay shafts located on that side, Fig. 3167. The valve gear is driven by means of a return crank and bevel wheels from the crank of the high-pressure cylinder. The main lay shaft, lying directly in the centre line of the engine outside of the high-pressure crosshead, receives the motion from the bevel wheels. This shaft, in its turn, drives two other lay shafts held by brackets on to the side of the high-pressure cylinder, a gear on the end of the main lay shaft driving corresponding gears on the two shafts on the high-pressure cylinder. The upper one of the last-named shafts operates all the inlet valves, while the lower one operates all the exhaust valves, the rods for the intermediate and low-pressure valves extending across the tops and bottoms of the respective cylinders, Fig. 3183. The inlet valves of the high-pressure cylinder are under the control of a centrifugal governor, which is geared to the main lay shaft in such a manner that the ratio of gearing can be changed by a handwheel, and the pump run at different speeds, the maximum speed being about 45 revolutions per minute. This high-pressure cut-off gear is of a type designed by Mr. B. V. Nordberg, and is illustrated by Figs. 3182 and 3183. By its use a range of cut-off from 0 to $\frac{7}{8}$ of the stroke can be readily obtained. All the other valves are driven by revolving cams and levers in an ordinary manner.

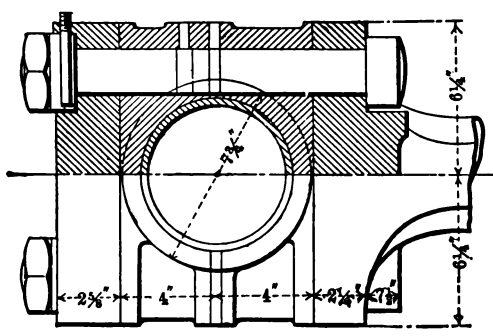

Fig. 3175.

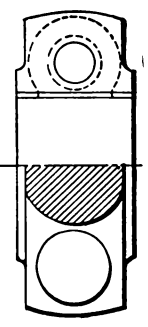

Fig. 3176.

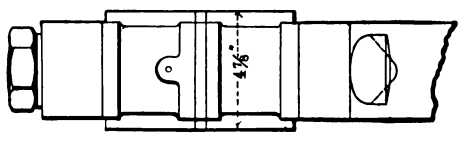

Fig. 3177.

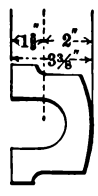

Fig. 3178.

The valve gear actuating the inlet valves on these cylinders is of a releasing type operated from a geared lay shaft, Fig. 3183. It consists of an eccentric for each valve, keyed to the lay shaft, which is connected to the valve gear in such a manner as to obtain two distinct motions of different periods, one period being about 90 degrees in advance of the other. To obtain this action, the strap is suspended on a radius rod *a*, Fig. 3183, the oscillation of which produces the cut-off motion, while the point *b* of the strap produces the valve-opening motion. The centre of the eccentric, the point *b*, and the point *c*, at which the eccentric strap is connected to the radius rod, form a triangle. The suspension point *d* is inside of this triangle. This makes the point *b* describe a curve, the outline of which approximates that of a triangle. The direction of rotation of the lay shaft is as shown by the arrow.

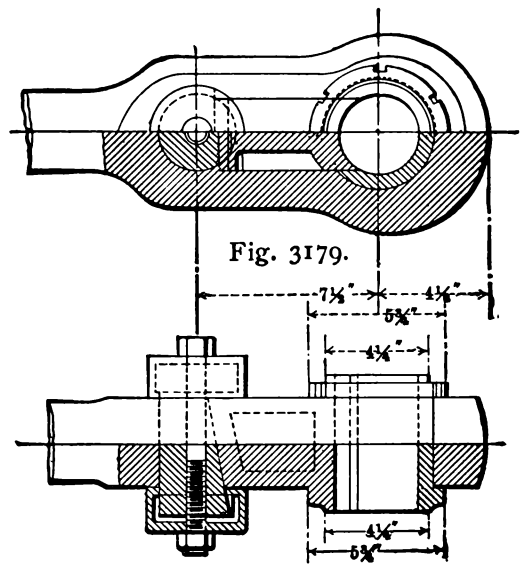

Fig. 3179.

Fig. 3180.

while, of course, the path of the curve produced by *b* is in the opposite direction. During the part of the motion when the valve opens, the point *b* moves rapidly downward; again, during the part of the motion when the valve is on its seat, the motion of point *b* is comparatively slow. During this part of the motion, the curve produced by *b* very nearly approaches an arc of a circle, with its centre at point *e* on the main lifting lever *e f*, so that this lever stands still while point *b* passes the last mentioned part of its path. The mechanism used for operating the valve consists of the main lifting lever *e f*, which is pivoted at point *f* on the dashpot plunger. The point *g* is free to move, and carries a trip lever *h g i*, with its trip face at point *i* corresponding with another trip face *j* fastened on the lever *g j k*.

This lever is pivoted on the bracket *l* bolted to the cylinder, the point of suspension being directly opposite to the point *g*. Now the lever *g j k* receives its motion from the radius rod by a projection *d m* cast thereon. The motion of the point *m* is a little in advance of the crank, so that the oscillation of the lever *g j k* is very nearly the same as the motion of the crank, only a little in

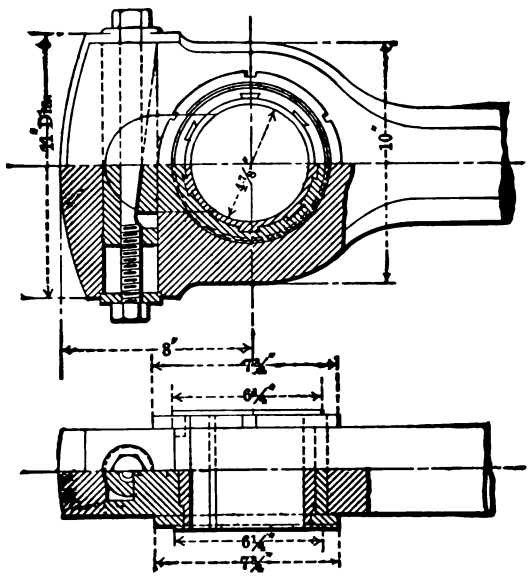

Fig. 3181.

advance thereof. The point *h* of lever *h g* is connected to a shaft *n*, held by the lever *n o* to the governor, and by means of this lever the governor controls the cut-off of the engine. The action of this mechanism is as follows:

The lever *e f*, when the valve is on its seat, is elevated high enough so the trips *i* and *j* clear each other. During this part of the motion the point *m* moves rapidly upward, bringing the point *j* under *i*. During this part of the motion, the point *b* passes through the part of its motion when the curvature of the motion curve has its centre in *e*, so that the lever *e f* stands still. When the steel die *j* is well under the steel die *i*, the motion of *b* is rapidly downward. Point *e* descends and brings the dies *i* and *j* into contact with each other. This makes *g* the fulcrum of the lever *e f*, which causes the point *f* to ascend rapidly. In the meanwhile, the point *m* has passed its extreme, and begins to go downward, drawing the die *j* out from under *i*, thus withdrawing the support of the lever *e f*. The spring P then closes the valve, the lever *e f* turning around *e* as a fulcrum. The mechanism is duplicated for the other valve, the eccentric of which is set exactly opposite to the one the motion of which we have just described. It will be noticed that the two levers on the shaft *n*, which connect to the levers *g* and *h*, are of different length and differently located. The object of this is to eliminate the effects of the angularity of the connecting rod. The lever *j g k* forms an oil receiver around the trip die *j*, which is kept constantly full of oil, into which the die *i* dips every time the valve is released. One advantage of this valve gear is that the trip dies move at a velocity of about one-half of that of the ends *e* and *f* of the lifting lever, so that this valve gear can be run at higher speeds than valve gears of the Sulzer type. The connection at the point *f* in the dashpots also becomes very simple in this mechanism, requiring no link (see Fig. 3184). The exhaust valves are operated by revolving cams in a well-known manner.

The pump plungers are connected with the extended piston rods by means of bolted couplings, cast of steel. As there is a gate valve both on the inlet and discharge nozzles of each pump, one of these pumps can be disconnected and overhauled while the rest of the engine is running, by unbolting the coupling and closing the valves on the inlet and outlet nozzles.

A surface condenser is used in connection with the engine, the air pump and circulating pump of which are driven by an independent auxiliary pumping engine, which also drives the boiler

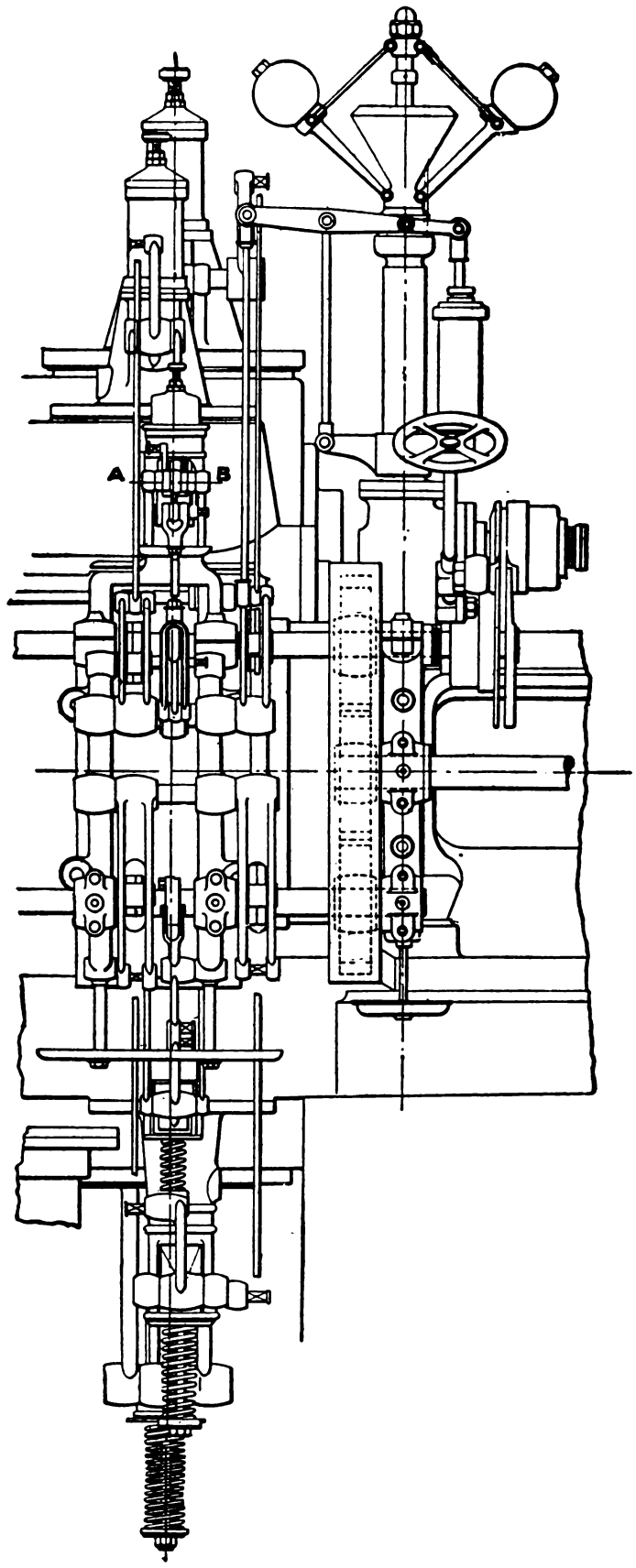

Fig. 3182.

feed pump, jacket draining pump, and air compressor for supplying the air chambers with air. The circulating pump, which is shown in Fig. 3168, but which will be illustrated in more detail, together with the jacket pump, takes its supply from the main suction pipe of the pumping engine, and the overflow from the condenser is returned to this suction pipe at a point nearer the pumps than the inlet. To regulate the amount of water passed through the condenser, a back flow or by-pass valve is used, which can be operated from the floor. A similar valve is used to regulate the flow of water from the feed pump to the boiler.

In order to secure a good action of the jackets, the following arrangement is adopted : Steam from the main steam pipe is admitted into the high-pressure jacket, and a drain pipe from the bottom part of this jacket is led to the top of the intermediate cylinder jacket. The drain from the bottom of the intermediate jacket is passed to the top of the low-pressure jacket. In the same manner, live steam from the main pipe is taken to the heating tubes in the first receiver, Fig. 3169, and the drain pipe connected to the heating tubes of the second receiver. The drains from the low-pressure steam jacket, and from the second reheater, are connected into one pipe which leads into a steam separator, from which the steam cylinder driving the auxiliary pumping engine takes its supply after the water has been eliminated. The water drops to the bottom of the steam separator and is pumped

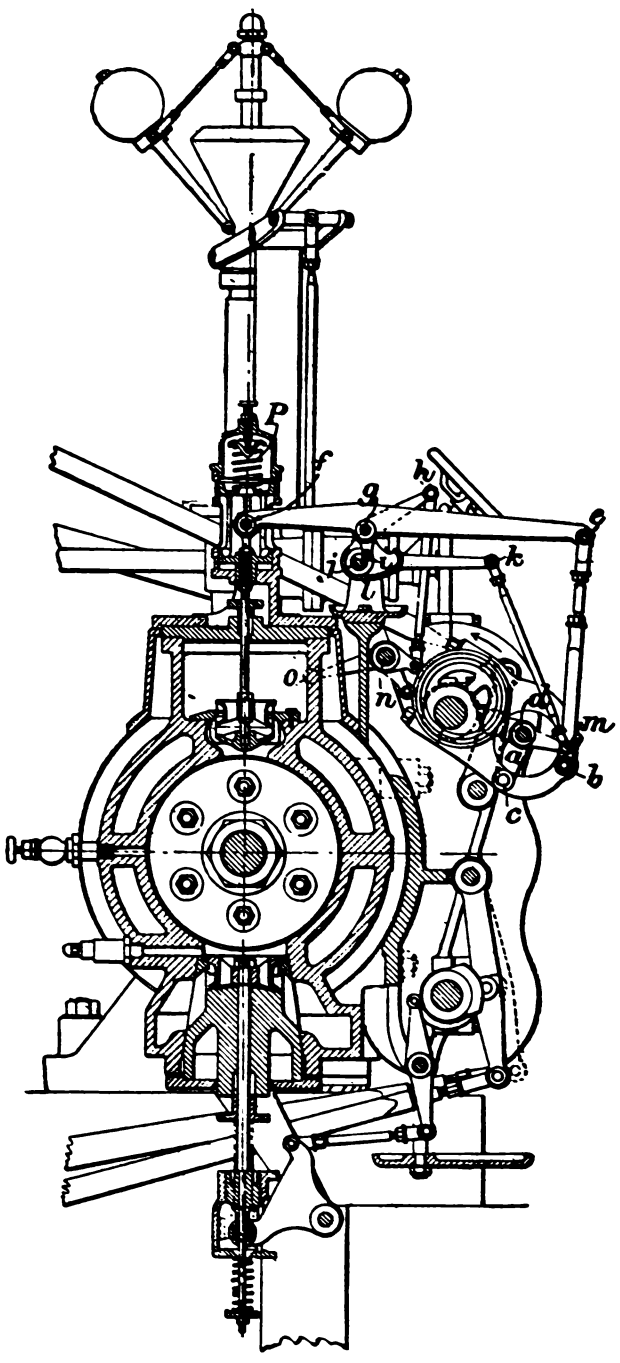

Fig. 3183.

away by means of the jacket draining pump. The exhaust from the auxiliary pumping engine cylinder is led to a closed tubular heater, through which the feed water is pumped, Fig. 3167. This heater has no outlet, so that no heat introduced can be wasted, but all has to go into the feed water. The jacket draining pump discharges the water of condensation into the main feed pipe at a point between the heater and the boiler. By this means there is insured a very rapid circulation of steam in the jackets and an economical action of the apparatus. At the lowest part of all the steam jackets there is a small valve by which steam can be blown out into the atmosphere for the purpose of determining its quality, and during the test, before the reception of the engine, this was repeatedly done, and at all times the steam issuing from the jackets appeared perfectly dry.

The steam cylinders are strongly ribbed to withstand the boiler pressure which is carried on all the steam jackets, Figs. 3169 and 3170. The low-pressure cylinder in particular had to be strengthened by means of pillars cast between the inner and outer shells in such a manner as to form the least obstruction to the circulation of steam.

The cylinders are carried in front by the bell-shaped flange of the frame, while the back ends are supported on cast iron brackets bolted to the foundation, Figs. 3166 and 3167. In this manner an open space is left under the cylinder, giving access to the lower valves and the lower part of each cylinder. In order to establish communication between the head jackets and the barrel jackets, holes are drilled through from the outside of the cylinder flange into the jacket space, communicating with others drilled through the head flanges into the head jacket space ; these holes are $\frac{1}{8}$ inch in diameter. Short gaspipe nipples were screwed into the holes on the cylinder flange, to serve for holding the copper gaskets used for making joints. All the cylinders are covered with asbestos cement and magnesia, and are lagged with a jacket of planished steel.

The steam-inlet valves on all cylinders are made of phosphor-bronze, with seats of the same material bolted in, Fig. 3186. The exhaust valves are made of steel, with seats of steel having a taper fit in the cylinders, Fig. 3187. The piston rods are screwed into the pistons and into the crossheads. The pistons are provided with self-setting cast iron packing rings and adjustable junk rings, means being provided in the piston to adjust these rings in case the bottoms of the cylinders wear. The valve stems, Fig.

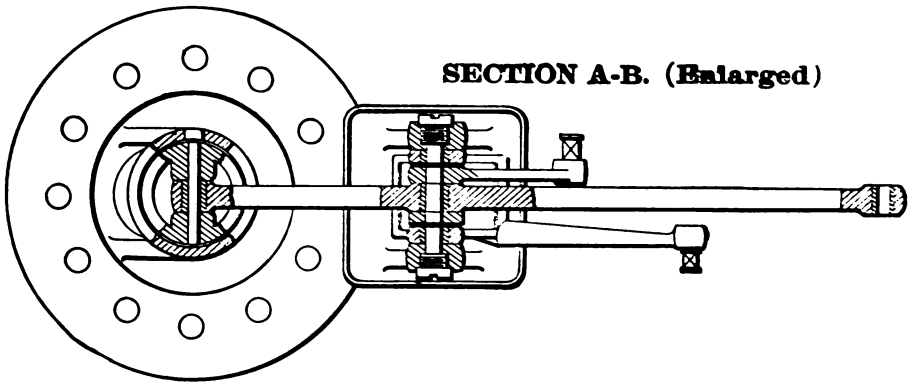

Fig. 3184.

3190, are made of forged steel. Figs. 3175 to 3181 show the connecting rods.

All pins in the valve gear are made of hardened high carbon steel running in hardened bushings ; pins and bushings being ground to a fit. The long rod, transmitting the motion from lay shaft to inlet, and exhaust valves of intermediate and low-pressure cylinders, are subject to tensile strain only. They are made of rectangular section, quite thin. The low-pressure rods are guided in slotted forks mounted on the intermediate-cylinder valve bonnets, Fig. 3168. The regulator is driven by means of friction disks from the lay shaft, Fig. 3185. The arrangement consists of one disk on the lay shaft, and one on the governor shaft, these disks being double, and arranged by means of central springs to pinch a third disk between them. This third disk is placed in the centre between the other two, and is $\frac{7}{8}$ inch thick at the hub, slightly tapering towards the circumference.

The rims of the double disk are tapered correspondingly, so that they grip the central disk very firmly when the pressure of the springs is on them. By changing the relative position of the centre disks to the other two, the ratio of gearing between the lay shaft and the governor is changed. This can be accomplished by means of a handwheel located near the throttle valve.

A change of speed from 10 revolutions per minute to 45 revolutions per minute can in this way easily be obtained.

The engine frames are cast in one piece. They are supported by a base under the main bearing, and one running the full length of the slides, which are of cylindrical type, bored out to fit the crossheads. The main bearings are fitted with quarter boxes lined with babbitt metal hammered in and bored, and the arrangement is such that, in case of wear, the proper conditions of the

bearing can be always maintained. If the lining of the side shell next to the cylinder should wear down, and the box be taken up by means of the set screws, the centre of the shaft would move slightly towards the cylinder. The upper and lower boxes have sufficient play at right angles to the shaft, to allow them to adjust themselves correctly to the new position of the bearing after having been taken up as just explained. The intermediate and low rods. The connecting rods are of the Nordberg type (see Figs. 3175 to 3181).

In these the boxes are parted, not in a plane at right angles to the rod, but the adjustable box is fitted in a recess of the stationary one, which is perfectly cylindrical. This type of box has all the advantages of a bolted box, while it is much easier to adjust for wear.

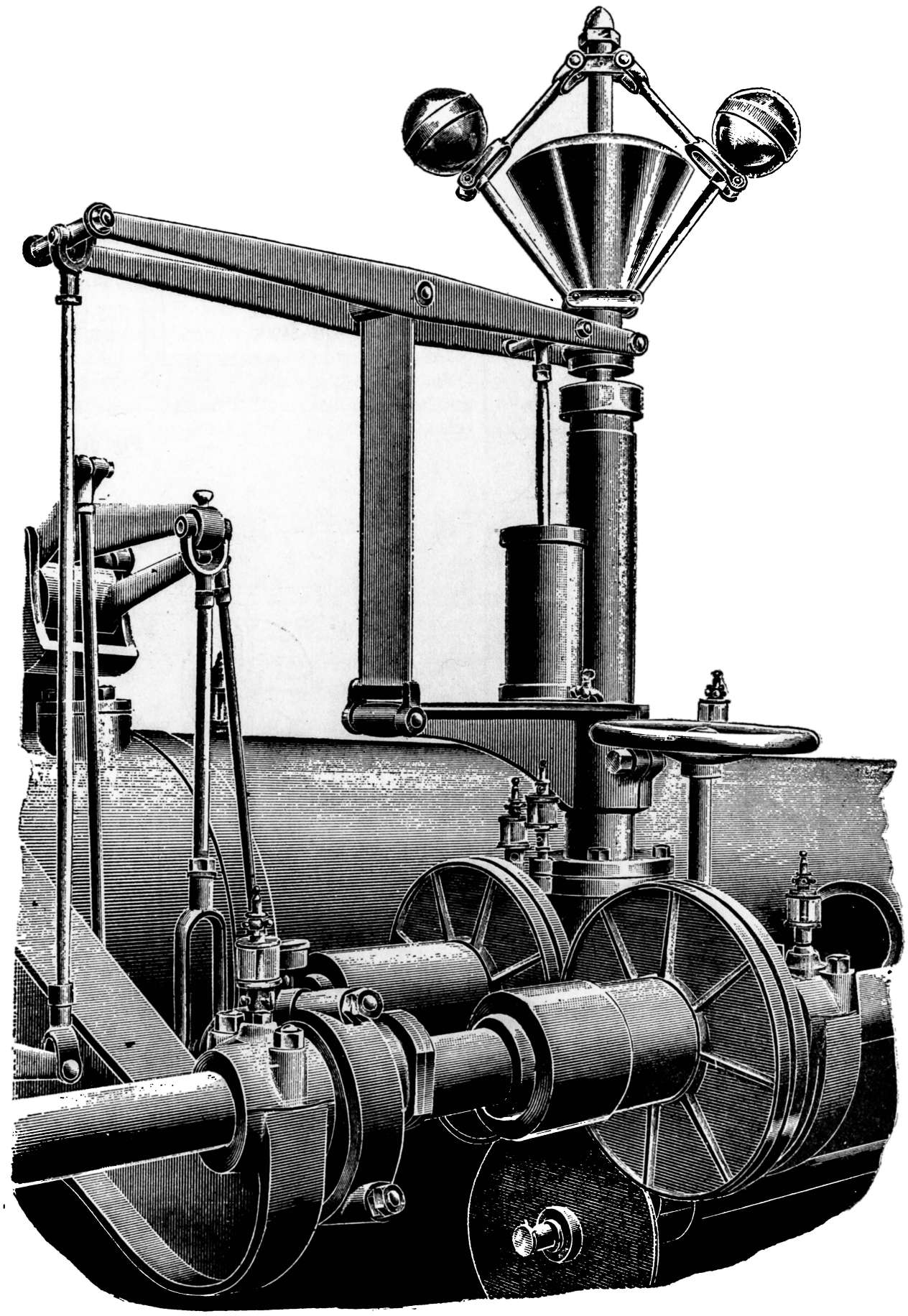

Fig. 3185.

pressure frames are bolted together. The second bearing for the intermediate engine is mounted on a bedplate reaching under the foot of the intermediate frame. This frame, as well as the second bearing, is dowelled to the bedplate.

A cast iron strut connects this second bearing with the intermediate frame, and a wrought iron bar is passed through this strut, which thus takes up any strain in the plane of the piston

One of the flanges of the stationary box is screwed on, while the other is cast on the box.

The keys used for adjusting the boxes for wear are cylindrical, fitting the cylindrical recesses in the rod. One of the intermediate cranks is of the disk type, having just sufficient weight in the counterbalance to be equal to one of the plain cranks.

The crankpin is forced into the disk which goes next to the

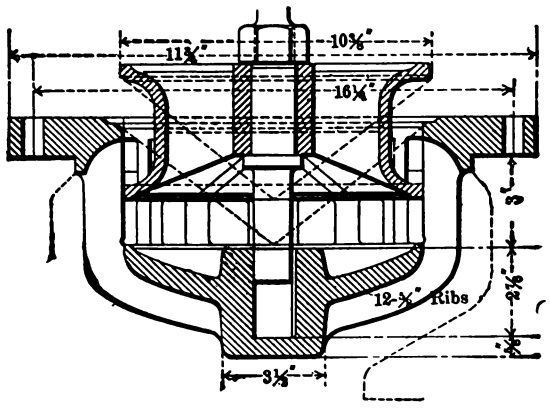

Fig. 3186.

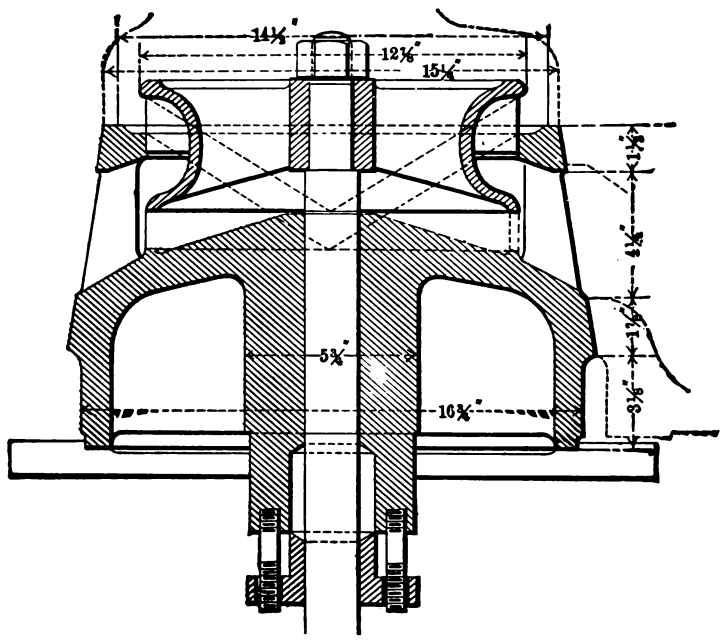

Fig. 3187.

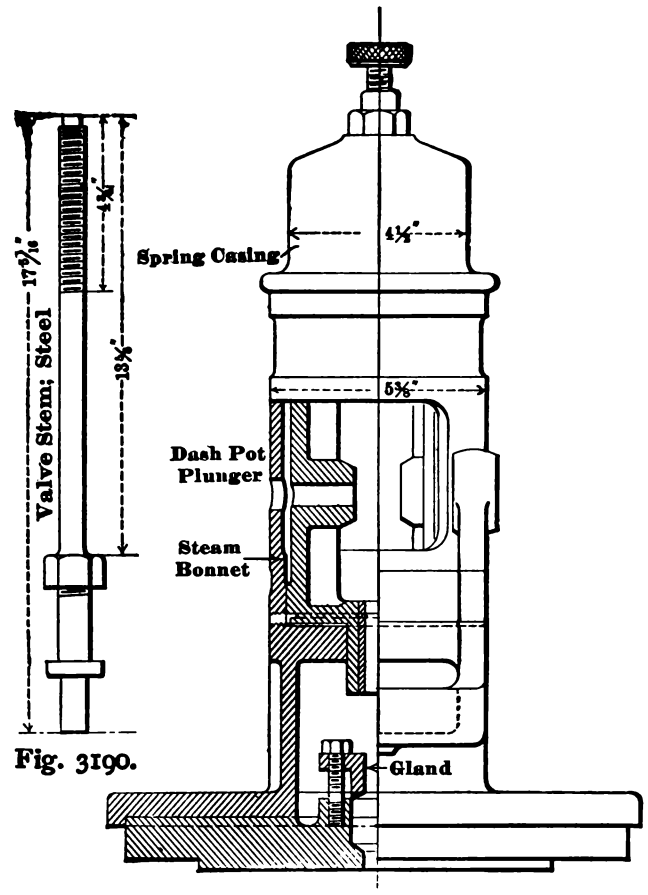

Fig. 3190.

Fig. 3189.

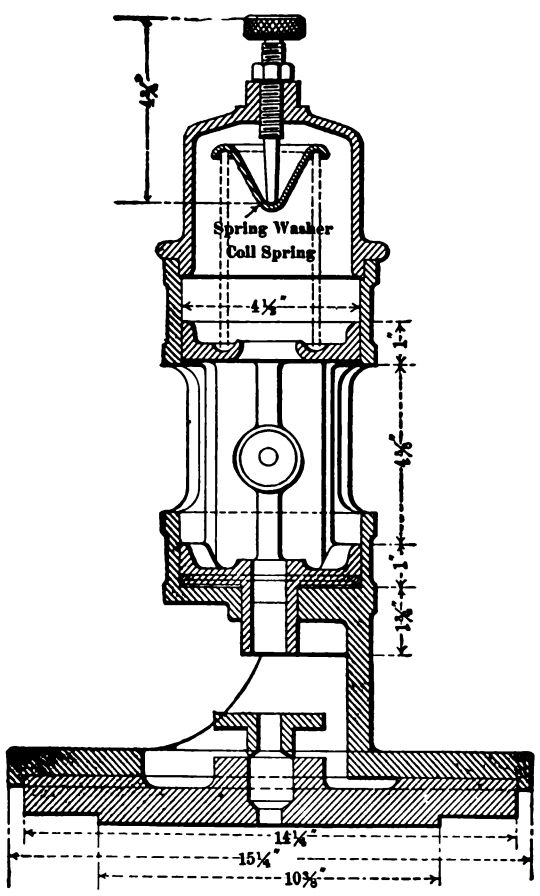

Fig. 3188.

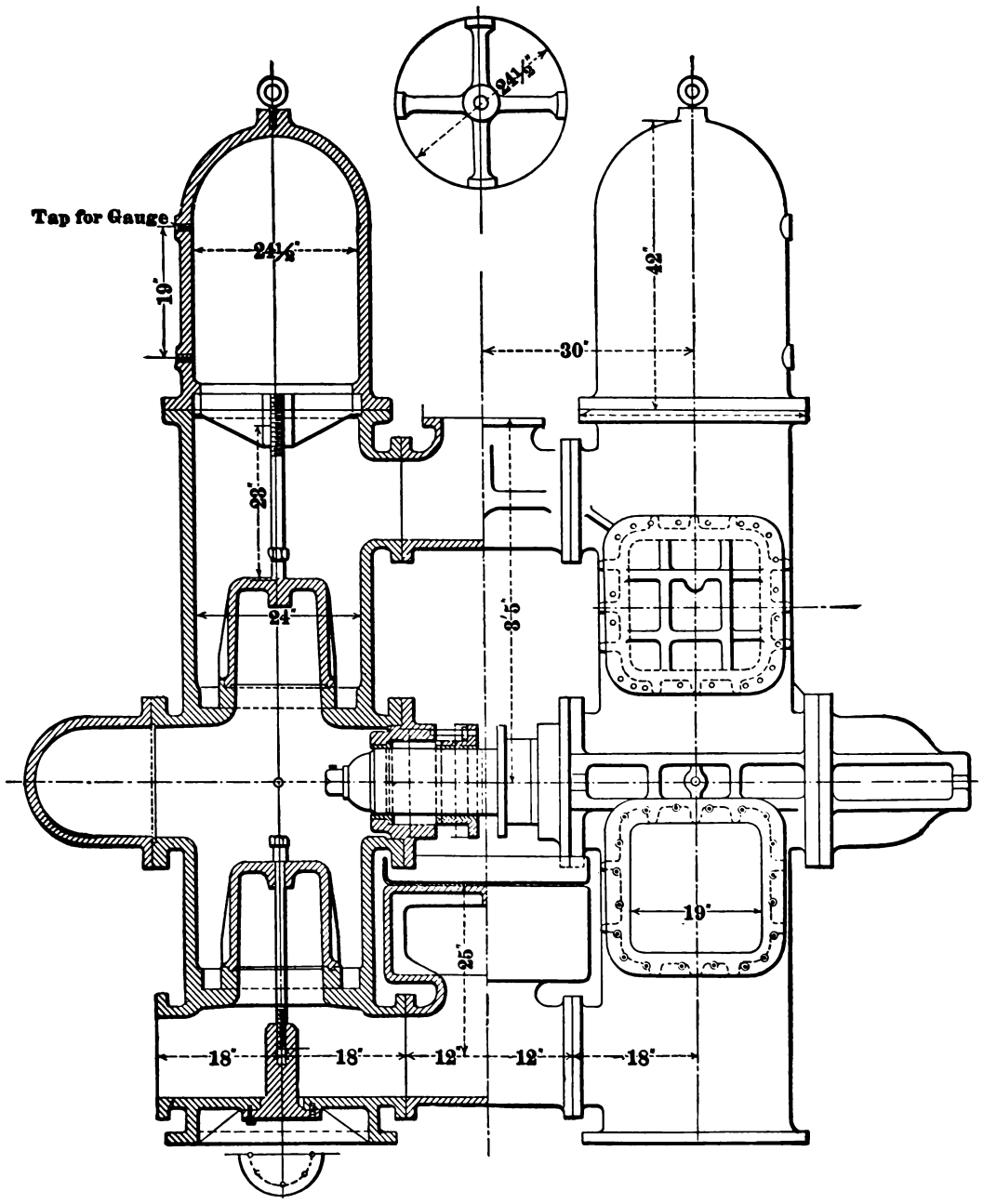

Fig. 3191.

Fig. 3192.

intermediate frame, so that all strain resulting from the steam pressure is taken by the frame, and not by the second bearing. The flywheels are made in halves, turned on rim and edges. One of the rims is provided with a rack for barring.

The pump chambers, Figs. 3191 to 3195, are cylindrical, with the exception of the manhole plates.

The valves are made of rubber, mounted on polygonal cages, by which arrangement the greatest amount of valve area can be obtained in the smallest space.

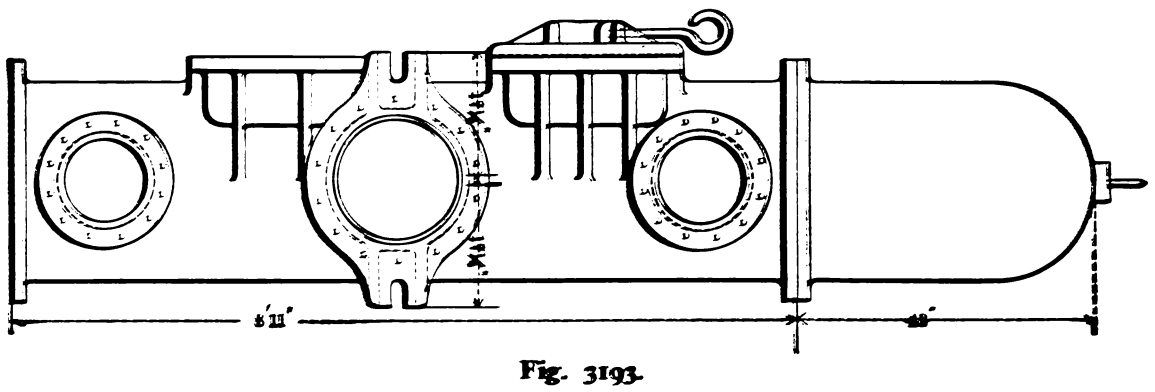

Fig. 3193.

Each cage is held in position by one single bronze screw. The two pump chambers are tied together by means of stretcher rods, and the whole pump connected to the cylinders in the same manner, the stretcher rods being located in the centre line of the engine. The pump plungers are of cast iron, running in brass-lined stuffing boxes. The pump rods are made of hammered open-hearth steel, incased in bronze linings. The auxiliary pumping engine combines in one machine air, circulating, feed, and jacket pumps, and air compressor.

It is driven by a steam cylinder 8 inches in diameter, the piston rod of which is directly connected to a single-acting air pump. The crosshead of this air pump runs in a circular guide.

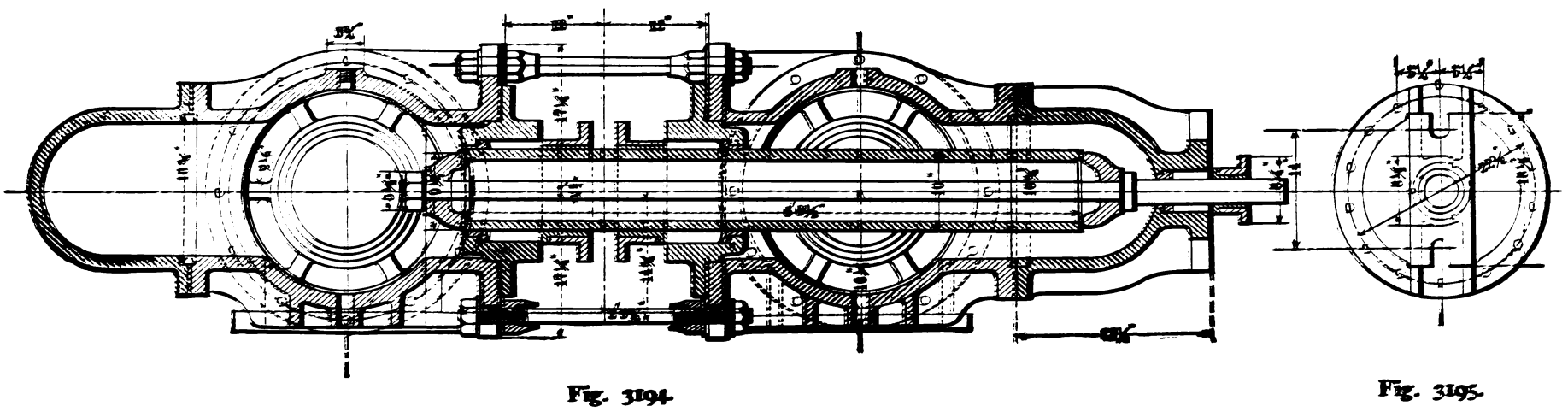

Fig. 3194.

Fig. 3195.

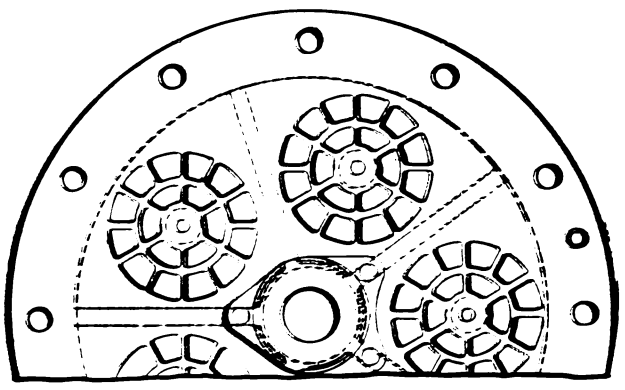

Fig. 3196.

By means of two links its motion is transmitted to one end of the beam. The other end drives the circulating pump, while the connecting rod receives its motion from a point located about midway between the end of the beam and the pump centre. The crank is located between the air and circulating pumps. The flywheel is on the end of the crankshaft. The jacket pump, feed pump, and air compressor receive their motion from an arm on the extended beamshaft. The air pump is fitted with only two sets of valves—one set on the bucket and one on a plate immediately above. It is single acting, 14-inch diameter by 12-inch stroke.

The valves are of flexible rubber with curved bronze guards. The steam cylinder is fitted with one single Corliss valve operated by an eccentric and rocker arm from the crankshaft. A centrifugal governor regulates the speed of the auxiliary pumping engine. The feed pump is single acting, 4 inches in diameter by 6-inch stroke. It is fitted with bronze valves and seats, and is provided with a back-flow valve by which its discharge can be regulated. The circulating pump is of differential pattern, having a bucket $9\frac{3}{16}$ inches in diameter by 20-inch stroke, the plunger being $6\frac{1}{2}$ inches in diameter. It is provided with rubber valves moving in basket guards, there being no guide for these valves whatsoever.

A butterfly valve, Fig. 3197, is arranged by which part of the water can be turned back into the suction, and thereby regulate the flow to the condenser. The jacket draining pump, Figs. 3203 and 3024, is single acting, and especially designed to pump hot water. As the pressure of the jacket water is approximately the same as the boiler pressure, all this pump has to do is to force the jacket water by the discharge valve.

There is, therefore, no packing necessary for the plunger. The pump is designed without any suction valve, the water flowing

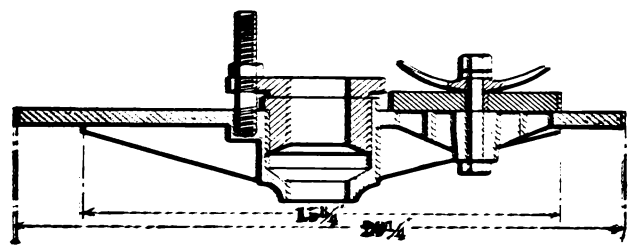

Fig. 3197.

into the space between the plunger and the discharge valve, which is mounted at the bottom of the pump directly in line with the plunger. When the plunger descends, it forces the water out by the discharge valve. In this manner the piston rod of the pump is not exposed to the water, but is surrounded by steam. A metallic packing is used on this rod, which is kept oiled.

This pump works exceedingly well, especially since a strainer has been put in its suction pipe to catch small particles of iron borings and sand from the steam jackets.

Figs. 3198 to 3201 show the feed heater.

The surface condenser is of horizontal type, fitted with $\frac{3}{4}$-inch brass tubes held in brass tubeheads by means of vulcanized fibre ferrules. The water is arranged to pass through the condenser three times. Spaces are left between the tubes so as to permit the steam to easily reach the cooling surfaces, which are 670 square feet. The condenser is set in a slightly inclined position, the highest point being the exhaust inlet. The arrangement of condenser and pumps is shown in Figs. 3167 and 3168. The air compressor is designed very much like the jacket pump; it is single acting and without suction valve. Arrangements are made whereby this compressor can be disconnected from the balance of the auxiliary pumping engine. The construction of receivers is shown in Fig. 3169. It will be seen from these that there is no steam jacket on these receivers, except on the bottom. Into the bottom are screwed a number of vertical wrought iron pipes provided with malleable iron caps on the top. This arrangement entirely eliminates the effects of expansion on the reheater tubes, and works exceedingly well. Traps were provided to drain the interior of the receivers, but during the test these traps were found entirely useless, as there was no sign of water in the receivers.

The leading dimensions of the engine are as follows:

Steam cylinders	16 in., 30 in., and 45 in.. by 40 in. stroke.
Piston rods	$3\frac{15}{16}$ in.
Main bearings	$8\frac{3}{4}$ in. by 15 in.
High and low pressure crankpins . .	$4\frac{1}{8}$ " by $4\frac{7}{8}$ "
Intermediate crankpin	$6\frac{1}{4}$ " by $4\frac{7}{8}$ "
Crosshead pins	$4\frac{11}{16}$ " by $5\frac{5}{8}$ "
" shoes	$8\frac{3}{4}$ " by 14 "
Crankshaft	$9\frac{1}{2}$ in. in flywheel hub.
Two flywheels, 10 ft. in diameter, weighing	8,000 lb. each.
Pump plungers	10 in. in diameter by 40 in. stroke.
Pump piston rods	$3\frac{1}{4}$ in. in diameter.
Auxiliary pump steam cylinder . .	8 in. by 12 in.
Air pump	14 " by 12 "
Single acting feed pump . . .	4 " by 6 "

Circulating pump, differential type—diameter of buckets, $9\frac{9}{16}$ inches by 20 inches; plunger, $6\frac{1}{2}$ inches in diameter. Jacket pump, 3 inches in diameter; active stroke, 4 inches.

Condenser, 436 tubes, $\frac{3}{4}$ inch in diameter by 8 feet free length; cooling surface, 670 square feet.

Air compressor, 3 inches in diameter by 5 inches active stroke.

Heating surface in feed-water heater, 76 square feet.

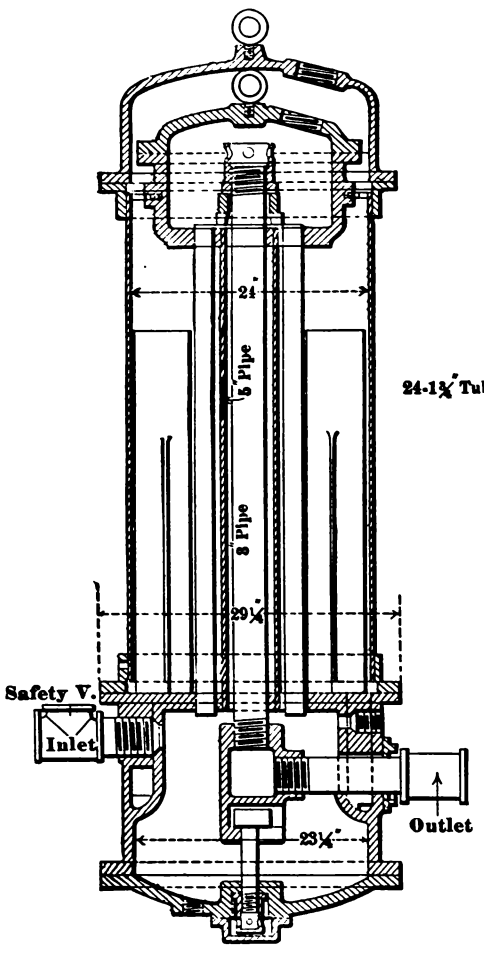

Fig. 3198.

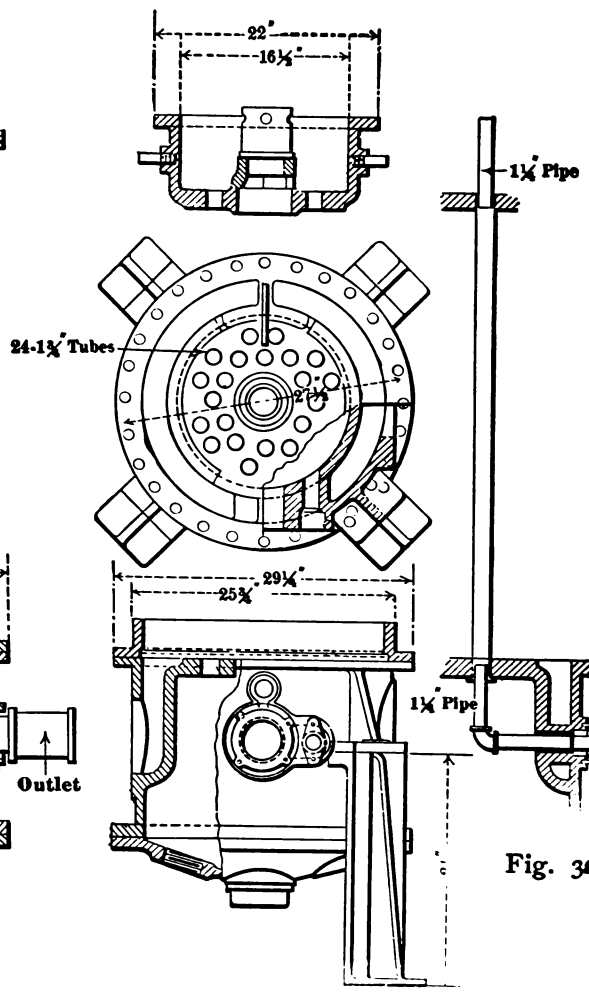

Fig. 3202.

Figs. 3199, 3200, 3201.

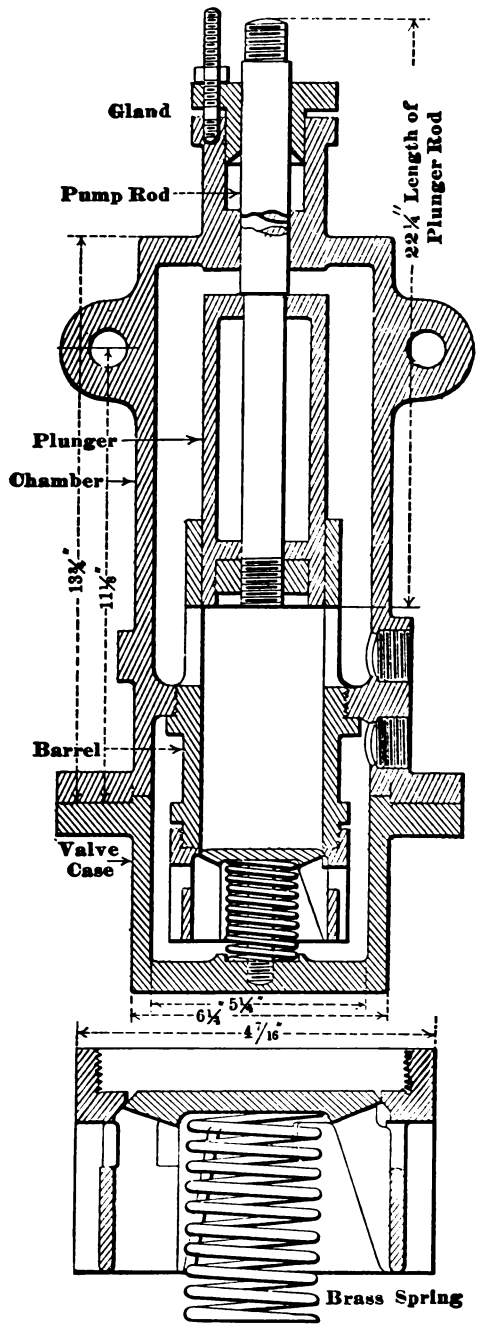

Figs. 3203, 3204.

TABLE SHOWING COAL CONSUMPTION PER ACTUAL HORSE-POWER PER HOUR DURING TEN DAYS' TRIAL OF A 5,000,000-GALLON PUMPING ENGINE IN U-STREET STATION, WASHINGTON, D. C.

Date.	Resistance on Plunger Pounds per Square Inch.	Actual (Pump) Horse-Power Developed.	Moist Coal per Actual Horse-Power per Hour.	Combustible per Actual Horse-Power per Hour.
Sept.			lb.	lb.
27–28	153.50	313.91	1.66	1.54
28–29	153.50	313.72	1.57	1.43
29–30	153.70	311.77	1.58	1.44
30–1	152.80	311.10	1.63	1.50
Oct.				
1–2	153.75	312.36	1.61	1.46
2–3	154.30	316.93	1.56	1.47
3–4	154.66	317.75	1.56	1.37
4–5	154.43	312.72	1.59	1.42
5–6	154.53	315.02	1.57	1.42
6–7	154.88	319.67	1.52	1.38
Means	154.01	314.50	1.59	1.44

The coal used contained 2½ per cent. moisture, which, in above table, is not deducted in calculating.

Deducting the moisture, the net combustible per actual (pump) horse-power per hour is 1.4 lb.

The coal consumption in this table includes that used for driving independent air, circulating, boiler feed, and jacket draining pumps.

TRIAL OF THE NORDBERG 5,000,000-GALLON PUMPING ENGINE IN THE U-STREET STATION, WASHINGTON, D. C.

Engine.

Duration of trial	16 hours
Revolutions, total	43,741
" per minute	45.56
" " A and C pump	59
Indicated horse-power, high-pressure cylinder	90.25
Indicated horse-power, intermediate-pressure cylinder	113.26
Indicated horse-power, low-pressure cylinder	138.39
	341.90
Indicated horse-power, A and C pump	4.70
" " total, engine and air and circulating pump	346.60
Indicated horse-power delivered in discharge main	315.13
Indicated horse-power in friction of engine and pump = 7.8 per cent.	26.77
Cut-off in high-pressure cylinder	12 in.
" intermediate-pressure cylinder	12 "
" low-pressure cylinder	14 "
Ratio of cylinders—high pressure	1
" " —intermediate pressure	3.636
" " —low pressure	8.184
Number of expansions	26.16
Displacement of air pump per indicated horse-power per minute	.183 cub. ft.

Pressures.

Steam, boiler and engine per gauge	149.75 lb.
" first receiver, per gauge	34.2 "
" second " "	2.9 "
(Gauges are 6 ft. above receivers.)	
" high-pressure jacket gauge	139.75 "
" intermediate-pressure jacket gauge	135.94 "
" low-pressure jacket gauge	132.8 "
" reheater jacket gauge	132.6 "
Barometer	30.05 in.
Vacuum in condenser	25.96 "
Draught in chimney, inches of water	¼
Water in suction main, gauge	4.35 lb.
" delivery "	157.75 "
Initial pressure, high-pressure cylinder, absolute	152.0 "
Initial pressure, intermediate-pressure cylinder, absolute	52.8 "
Initial pressure, low-pressure cylinder, absolute	16.2 "
Mean pressure, high-pressure cylinder, absolute	50.7 "
Mean pressure, intermediate-pressure cylinder, absolute	17.6 "
Mean pressure, low-pressure cylinder, absolute	9.5 "

Temperatures.

Air	81.7 deg.
Injection	79.0 "
Discharge	87.0 "
Hot well	103.7 "
Feed-water at boiler	188.4 "
Uptake	518.5 "
Water in main	79.0 "
Steam in high-pressure cylinder	381.75 deg.
" intermediate-pressure cylinder	280.0 "
" low-pressure cylinder	221.5 "
" " exhaust pipe	131.8 "
Steam superheated at high-pressure steam chest	16.25 "

Coal—George's Creek, Cumberland.

Total coal consumed, moist	8,200 lb.
Moisture in coal	2½ per cent.
Total dry coal consumed	7,995 lb.
Ashes (5.85 per cent. of dry coal)	468 "
Combustible	7,527 "
Moist coal consumed per hour	512.5 "
" " " per square foot of grate per hour	14.04 "
Moist coal consumed per indicated horse-power per hour	1.48 "
Dry coal consumed per hour	499.68 "
" " per square foot of grate per hour	13.69 "
Dry coal consumed per indicated horse-power per hour	1.44 "
Combustible consumed per hour	470.44 "
" " per square foot of grate per hour	12.89 "
Combustible consumed per indicated horse-power per hour	1.357 "

Evaporation.

Total water evaporated in boilers	76,624.5 lb.
" steam used in calorimeter	4 "
" " to engine	76,620.5 "
" " " per hour	4,878.78 "
Steam condensed in jackets, total	3,951.54 "
" " " per hour	246.97 "
" " " " indicated horse-power	.71 "
Steam condensed in reheaters, total	4,117.30 "
" " " per hour	257.33 "
" " " " per indicated horse-power	.74 "
Percentage of steam to engine condensed in jackets and reheaters	10.53 per cent.
Steam passed through cylinders of engine and air and circulating pumps, total	68,551.65 lb.
Steam passed through cylinders of engine and A and C pumps per hour	4,284.48 "
Steam passed through cylinders of engine and A and C pumps per hour per indicated horse-power	12.36 "
Total steam used by engine, A and C pumps, jackets and reheaters per indicated horse-power per hour	13.81 "
Water evaporated per pound of moist coal	9.344 "
Equivalent evaporation from and at 212 degrees	10.1 "
Water evaporated per pound of dry coal	9.58 "
Equivalent evaporation from and at 212 degrees	10.36 "
Water evaporated per pound of combustible	10.18 "
Equivalent evaporation from and at 212 degrees	11.005 "
E.T.U. in water evaporated, total	80,005,479.4
" " " per hour	5,000,342.5
" " utilized by engine	80,001,302.9
B.T.U. in water utilized by engine per hour	5,000,081.4
B.T.U. in water utilized by engine per minute	83,334.7
B.T.U. per indicated horse-power per minute	240.4

Duty.

Per 100 lb. of moist coal	121,749,107 ft.-lb.
" 100 " of dry coal	124,870,879 "
" 100 " of combustible	132,634,872 "

Per 1,000,000 B.T.U.	124,784,288 ft.-lb.
" 1,000 lb. of feed-water . . .	130,290,270 "
Efficiency of boiler, 1 lb. of coal being assumed to contain 13,500 B.T.U. . .	72.28 per cent.

THE BUCKEYE ENGINE.—This engine is made in two forms, viz.: with a flat slide valve and flat cut-off valve, and with piston valves. In both cases the cut-off valve slides within the main valve, and the shaft governor and valve-moving mechanism are the same. The arrangement of the eccentrics and rockers is somewhat peculiar, effective, and interesting. Figs. 3206 and 3207 are general views of the engine as usually hitherto made, and detail views of its construction follow.

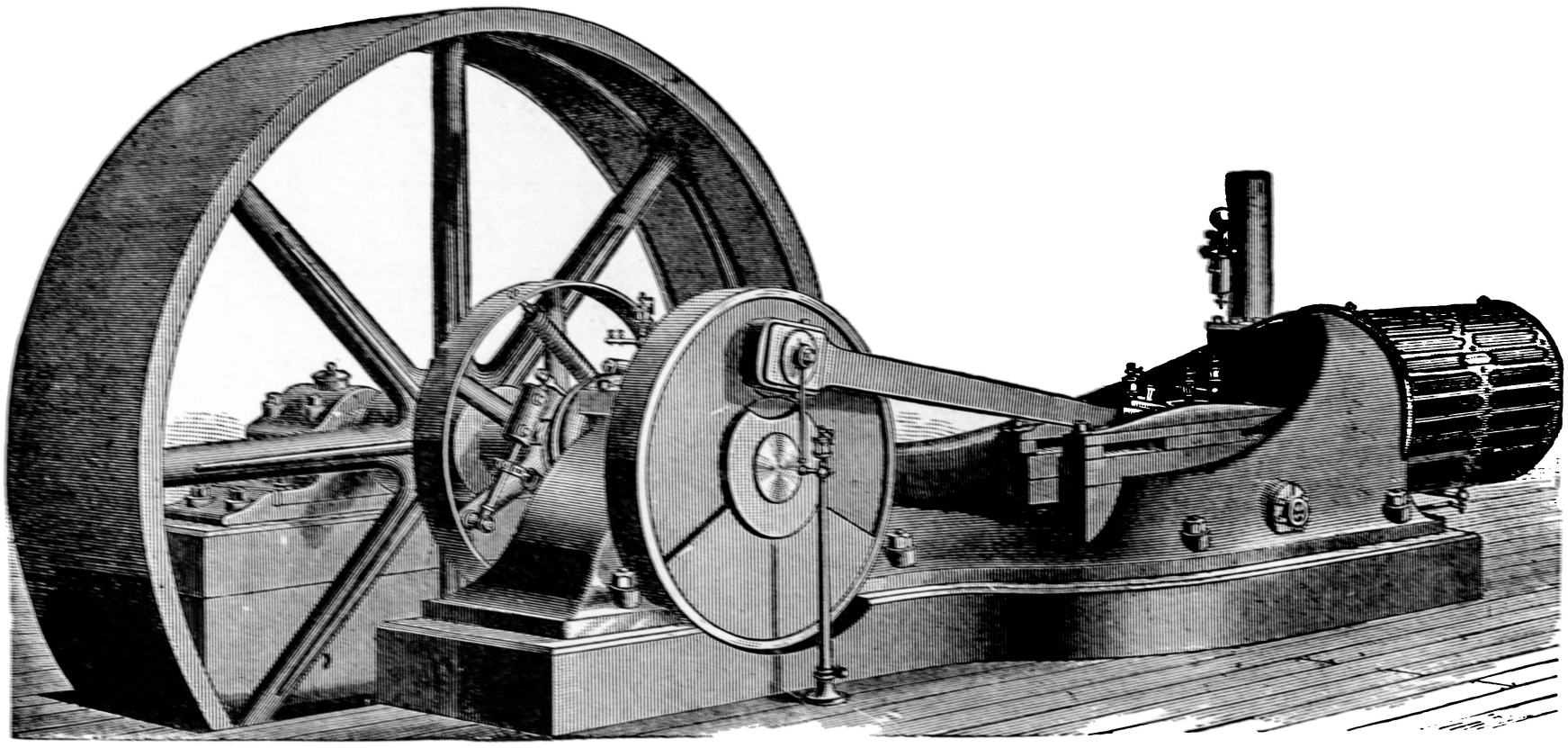

Fig. 3206.

The engine speed is regulated by a shaft governor, which moves the cut-off eccentric *around* upon the shaft, instead of *across* it, as is commonly the case, and thus gives to both its valves an equal and constant amount of travel, which prevents the surfaces from wearing unevenly.

Fig. 3208 is a horizontal section through the cylinder valves, steam chest, etc. The cylinder section is taken on one continuous central plane, while the steam chest and valves are shown upon two planes. The first, and nearest to the eye, extends from the crank end of the cylinder to the fracture at *f f f*, and shows the main valve in section through its centre. From the line of fracture *f f f* to the head end of the cylinder, a lower plane is taken, so as to pass through the centre of equilibrium rings, or balance pistons, this lower plane being on the line *b b*, Fig. 3209. This latter figure is a sectional view on the line A A, showing the back of the main valve with the balancing pistons removed from the crank end but in place in the head end.

Fig. 3210 is a cross section of the cylinder and valves taken on the line B B B in Fig. 3208 so as to pass through the centre of the valve-balancing pistons but leave the end of the cut-off valve in full view. Fig. 3211 is a sectional view on the line C C, Fig. 3208, and shows the back of the cut-off valve upon its seat in the main valve.

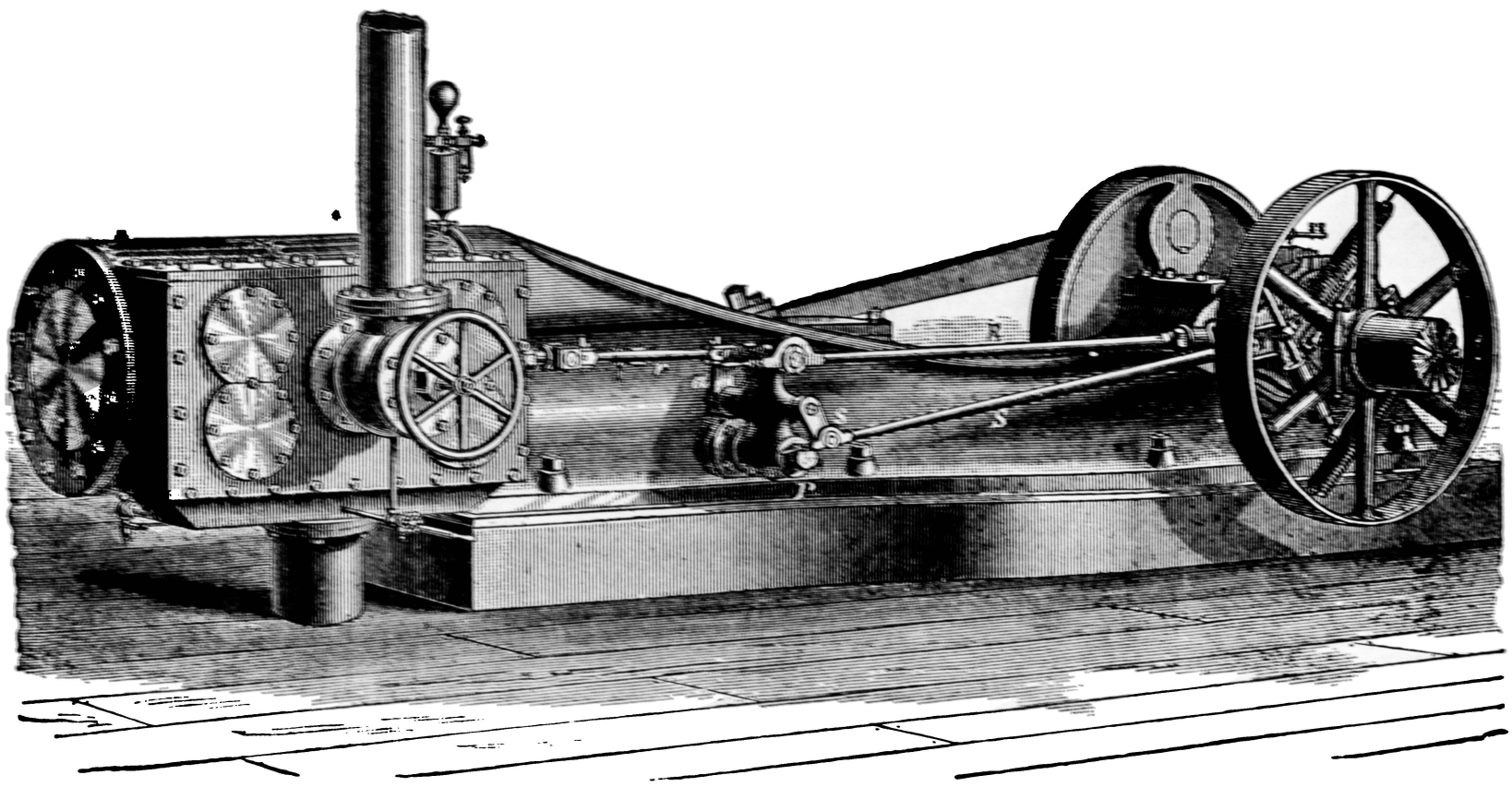

Fig. 3207.

The main valve V is a box or chamber seated at each end upon

the cylinder-port faces and provided inside with a flat surface or seat whereon the cut-off valve *v v'* operates, the cylinder ports being shown at *p' p''*. The cut-off valve consists of plates rigidly connected by means of the stretcher rods *h h'* and rides within the main valve, its spindle passing through that of the main valve.

The live steam takes the course denoted in Fig. 3208 by the arrows, filling the chamber D, which is in one piece with the valve chest cover, and passes into the back of the valve through the openings *d*, of which there are four (two at each end of the valve), as seen in Fig. 3209. The main valve is filled with live steam while the exhaust passes outside its ends to the outlet. The means employed to regulate the pressure of the valve on its seat are as follows:

The inner wall of chamber D has at each end a hub bored to

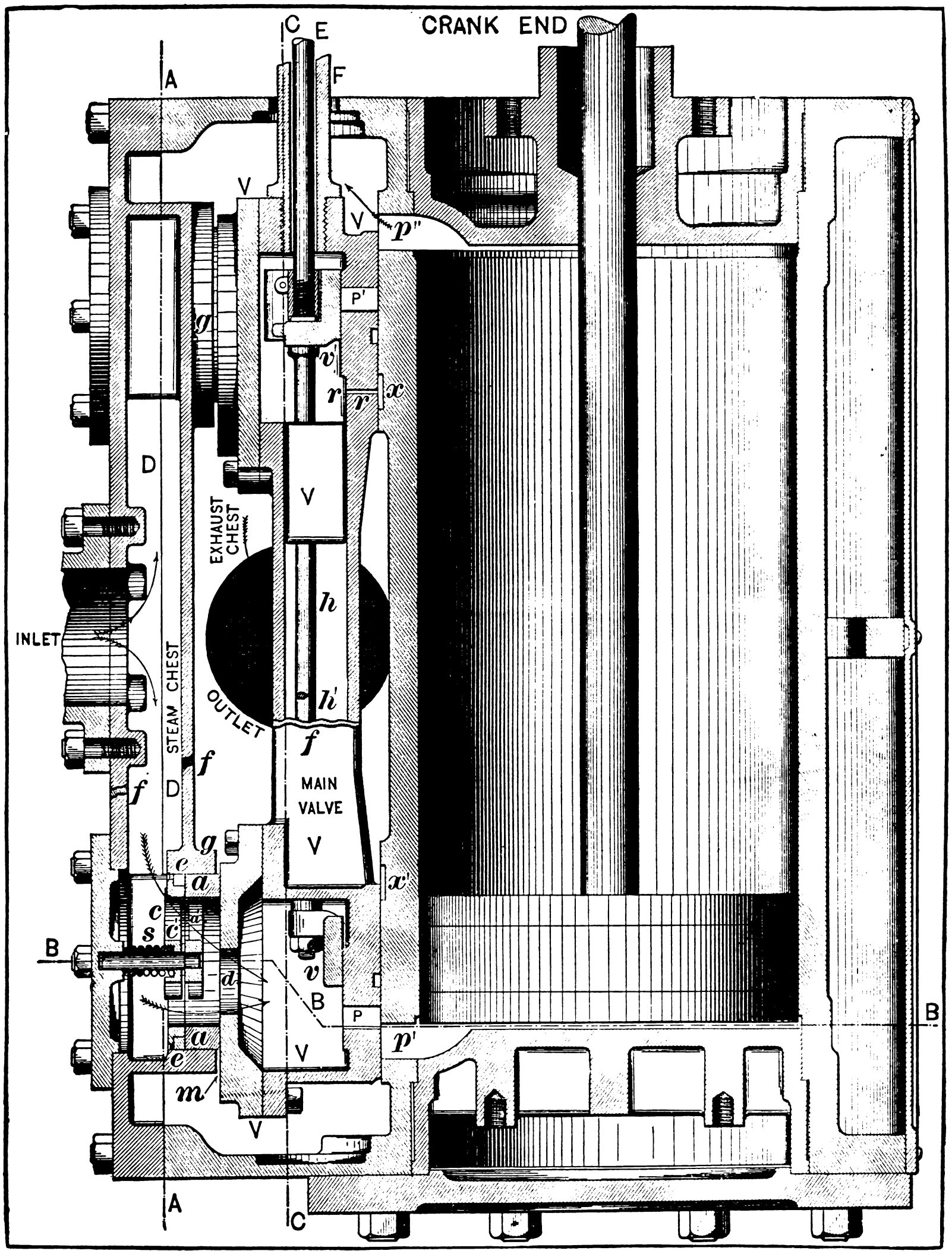

Fig. 3208.

receive equilibrium rings or valve-balancing pistons; these consisting of a spider *a* whose arms are shown at *a'*, the follower *c*, and packing ring *e*.

The spider has a guiding stem attached to its hub over which the follower slips easily. The spring S holds the follower and spider together and confines the packing ring *e* in its proper place.

The faces of the equilibrium rings or pistons *a* seat upon the back of the main valve, and, therefore, transmit to the valve whatever steam pressure they receive. The live steam, therefore, holds the valve to its seat by acting on the area enclosed within the circumference of the four equilibrium pistons *a*, and this area is so proportioned as to overcome the tendency of the valve to lift from its seat. This tendency is due to the cylinder port and the port in the main valve, and is greatest at the moment of admission.

With the parts in the position shown in Fig. 3208, for example, it is obvious that the steam in the port, at the head end of the cylinder, is acting on the underneath face of the main valve, and, therefore, in a direction to lift the valve from its seat, while, at the same time, the port on that end of the main valve permits the steam to press upon the cylinder face, and the steam being within the valve causes an equal area on the inside of the valve, and opposite to the port, to be unbalanced, and, therefore, act also to lift the valve.

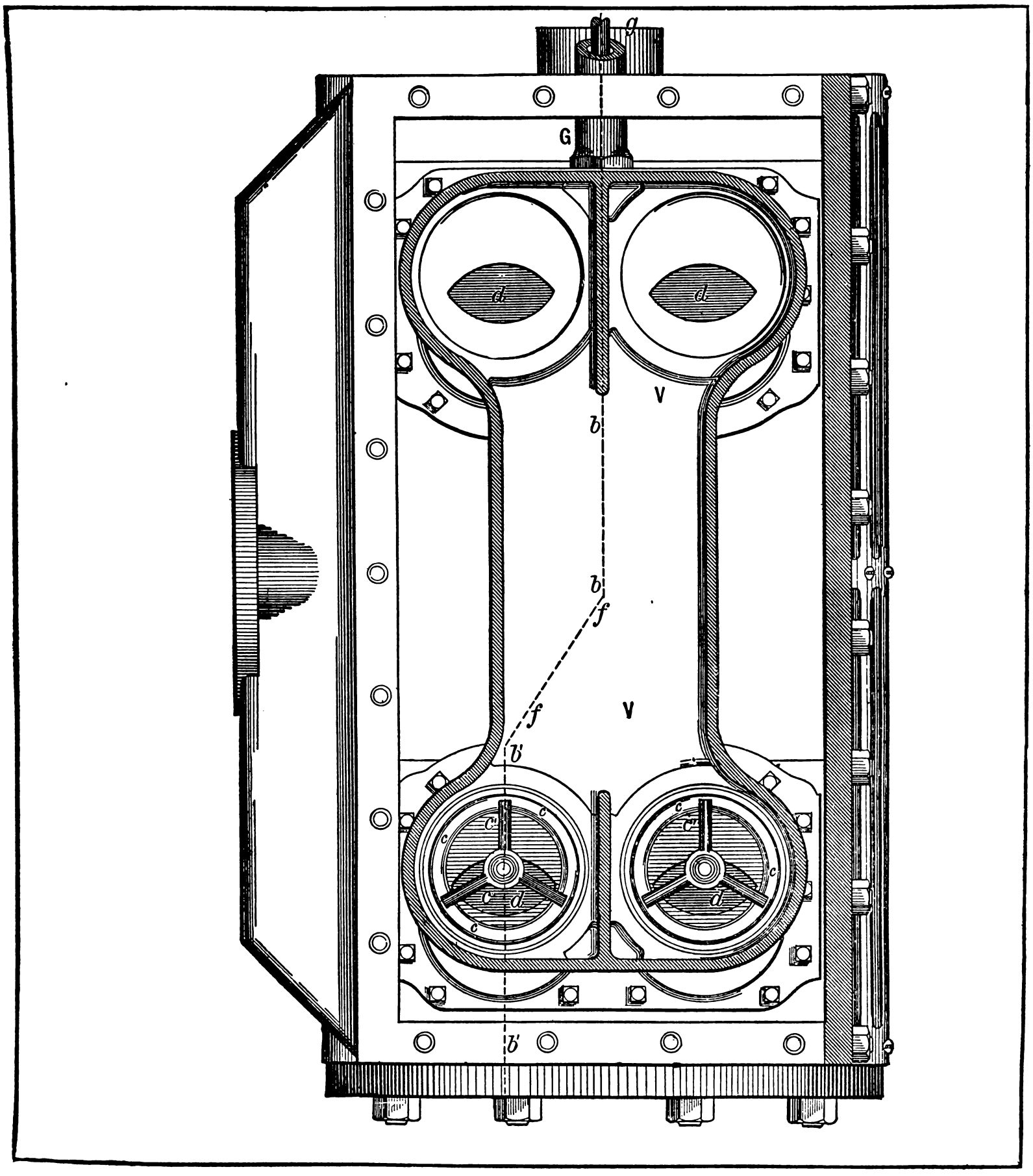

Fig. 3209.

The area, however, of the annular pistons is, as before stated, proportioned so as to overcome these two tendencies and hold the valve to its seat sufficiently to keep it steam tight.

It is obvious, however, that when the cylinder port is open to the exhaust, and the cut-off valve covers the port in the main valve, as is the case at the crank end of the cylinder, in Fig. 3208, the pressure upon that part of the valve that covers the cylinder port is reduced to that of the exhaust, while the port in the valve is

filled with steam that is enclosed between the cylinder face and the cut-off valve; hence, the annular pistons would, in the absence of any counteracting pressure, hold the valve more closely to its seat than is absolutely necessary at that end. But this is provided for by the relief ports or recesses, *x x'*, which, during that portion of the valve stroke in which it would otherwise be held to its seat with more force than necessary, receive steam, through the small hole shown to pass through the valve at *r*, and this steam,

It will be seen that the face *m* of the main valve does not quite reach the face of the hub *g*, and that the annular pistons, therefore, project through the bores of *g*, and this allows the main valve to lift from the seat to the amount of the space at *m*, in case the cylinder should receive a charge of water with the live steam. After the water has discharged into the exhaust, the steam pressure returns the valve to its seat, and the spring *r* causes the annular pistons to follow it up.

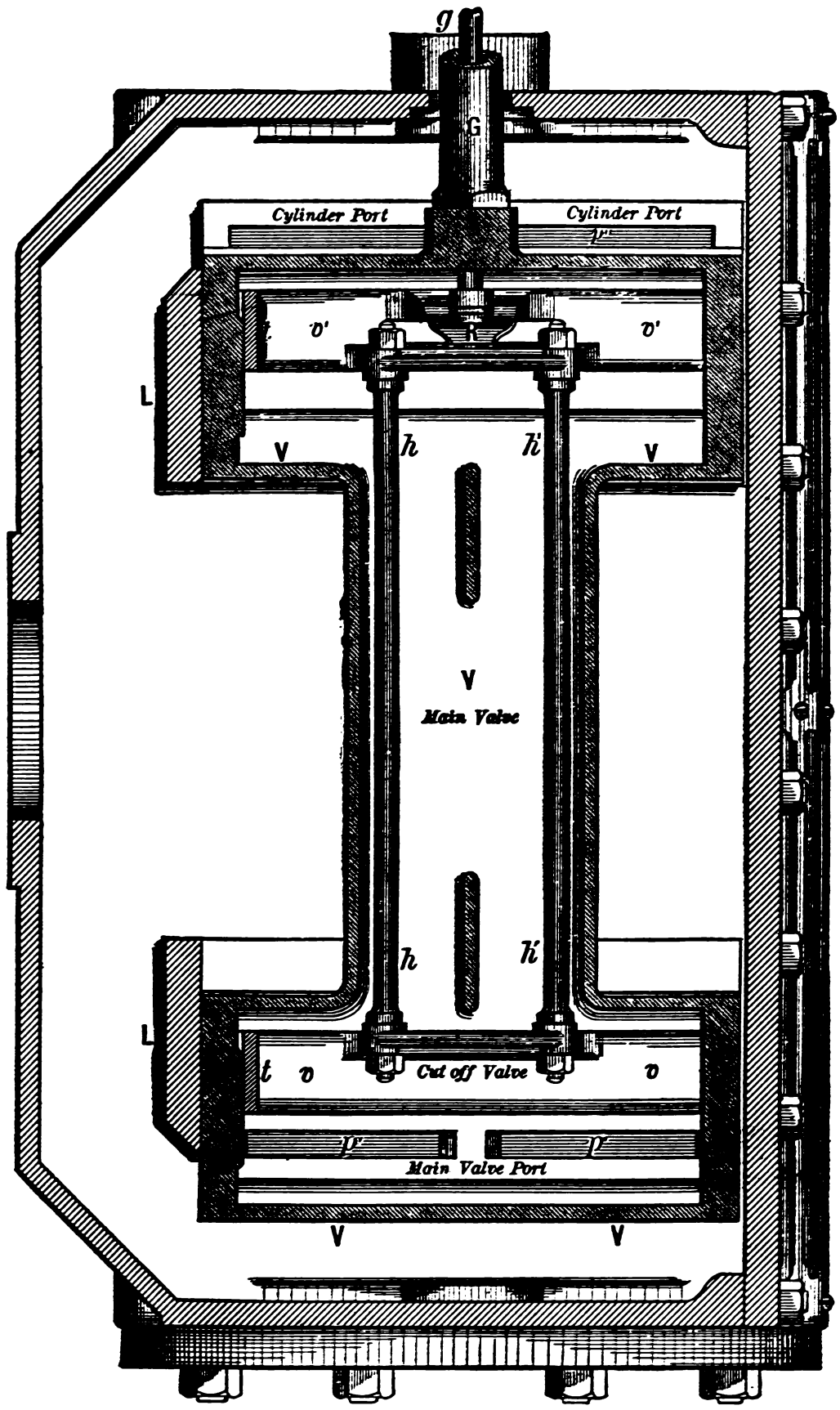

Fig. 3211.

acting on the face of the valve, relieves it of the undue pressure referred to. The relief recess is equal in area to the cylinder port, and is so located that it will be uncovered by the heel, or inner edge, of the main valve face, just after the cylinder port, at that end, is closed against the exhaust, and before any considerable compression pressure can arise in the cylinder.

The steam hole *r* is located to fill the recess at the proper time, which is just after it has been covered, as above stated, by the valve heel.

The cut-off valve is provided with an inclined plane at *t*, resting upon a corresponding inclined plane provided on the main valve; hence it moves of its own gravity up to its seat on the main valve, and its weight acts to cause it to seat itself fairly.

The mechanism for operating the valves is as follows:

Referring to the general view, Fig. 3212, and the cross sectional view of the frame and rock-shafts in Fig. 3213, the main eccentric is fixed upon the crankshaft, and its rod R drives the upper end of the main rocker (having journal bearing at *p'*, in

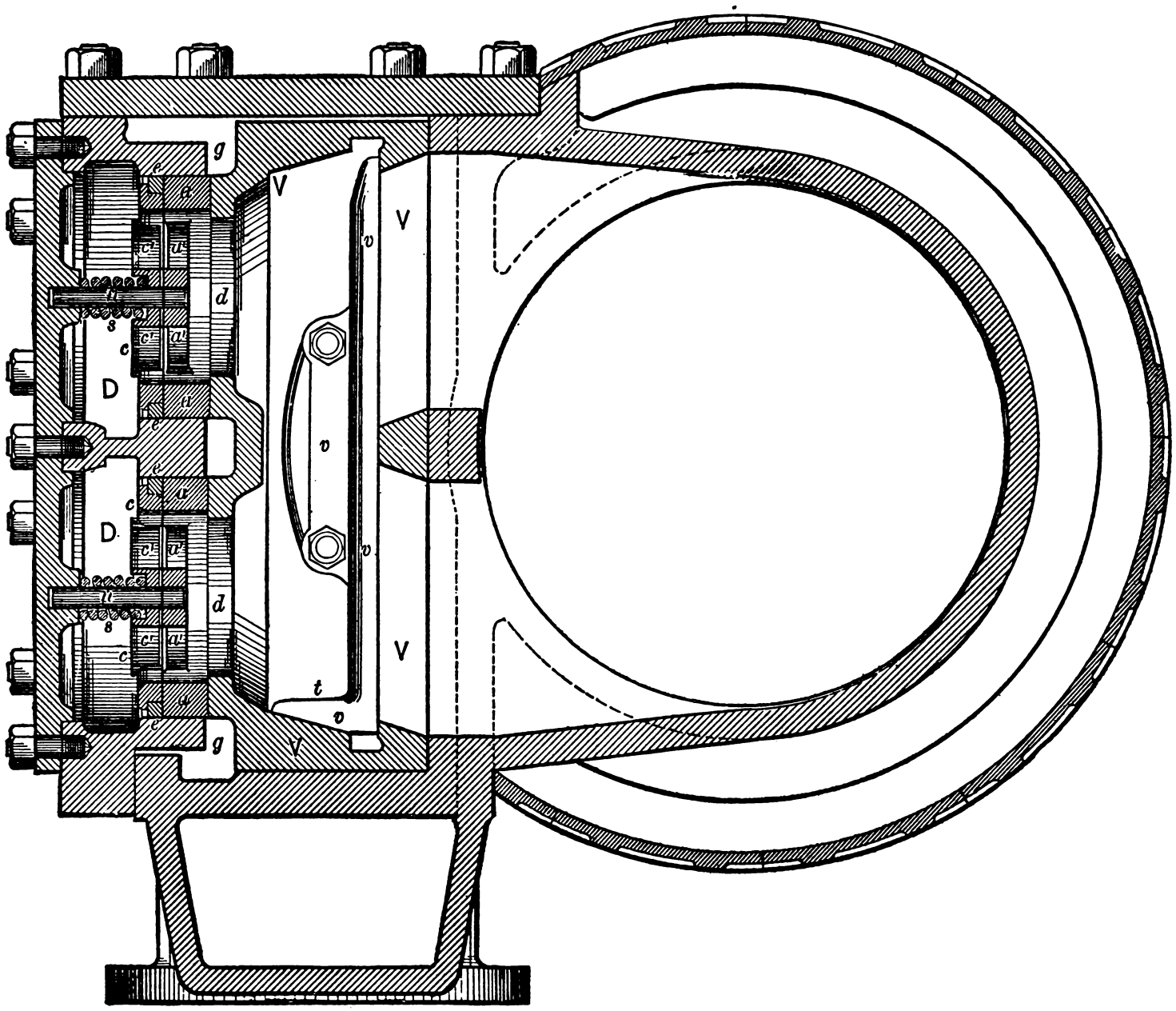

Fig. 3213

Fig. 3213). At F', Fig. 3213, it affords journal bearing for the rod which drives the main valve spindle.

The cut-off eccentric drives the rod S, which connects to the lower arm *s* of the cut-off rocker; *s* is fast upon A, which has journal bearing in the main rocker. The arm *a* is fast upon A, and provides at E' journal bearing for the rod that drives the cut-off valve.

The cut-off eccentric is a working fit upon the crankshaft, so that it may be moved around it by the governor, the construction being shown hereafter in connection with the governor. The construction of the valve rods is such that the spindle for the cut-off valve passes through that for the main valve.

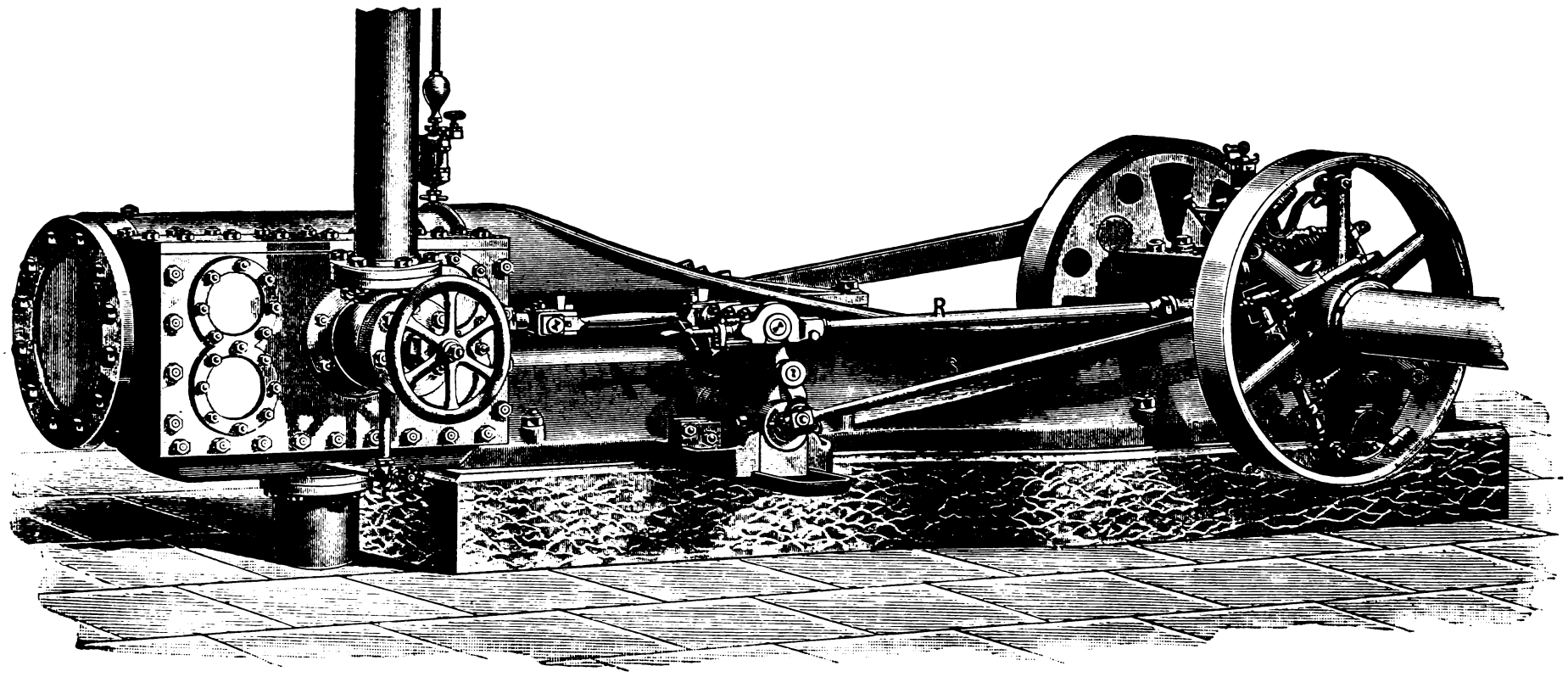

Fig. 3212.

In Fig. 3214 we have the main and cut-off valves removed from the other parts of the engine, their spindles, the rock-shaft, the eccentrics, and the crank being represented by their centre lines.

For ease of illustration, the rods from the rock-shafts are shown

shortened, and as if connected direct to their respective valves, which is sufficient for explaining the action of the mechanism, while it renders it easier to illustrate the movements of the parts.

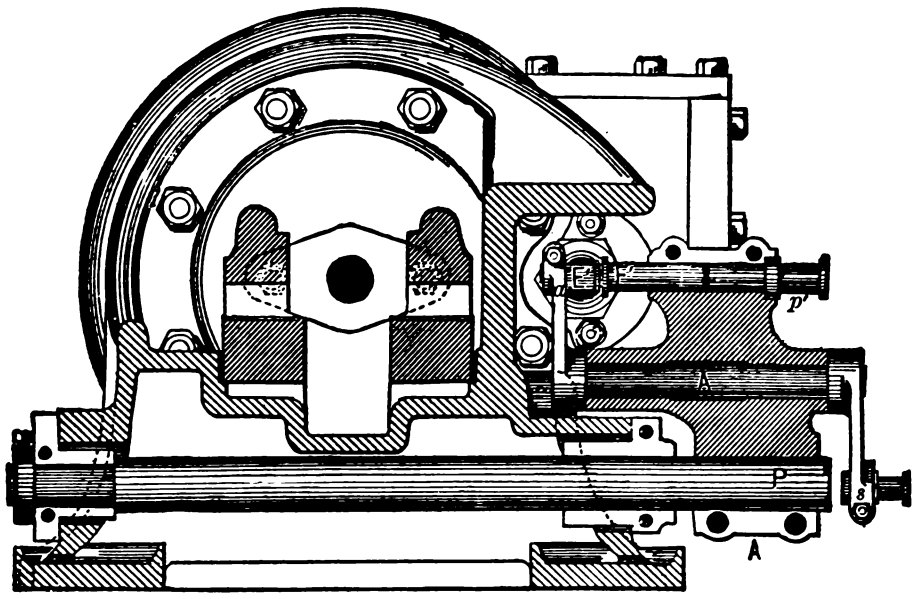

Fig. 3213.

The rods R and S correspond to R and S in Fig. 3212, as is also the case with the main and cut-off rock-shafts.

The crank is on the dead centre B, and revolves in the direction denoted by the arrow. The main eccentric is at *f*, and the cut-off eccentric at *e*. The main valve is operated by rod F, which is driven by the upper end *p* of the main rock-shaft. The cut-off valve is operated by the spindle E, which is driven by the upper arm *a* of the cut-off rock-shaft, which is pivoted in the main rock-shaft at A.

Since both eccentrics follow the crank in the direction of revolution, therefore, when the crank moves from the dead centre, the valves move in opposite directions, the main valve opening port *p'* for the live steam. As soon as the cut-off eccentric *e* passes the line of centres of the engine, it operates the cut-off valve in the same direction as the main valve, and both valves move in the same direction, until such time as the main eccentric *f* has also passed the line of centres, after which the valves are operated in different directions, until the cut-off valve crosses the line of centres on the other dead centre, at which time the valves will again move together, until the main valve has crossed the line of centres at that end.

This occurs by reason of the positions of the eccentrics, and of the employment of the cut-off rock-shaft, and will be readily perceived, because, with both eccentrics on the same side of the line of centres of the engine, they are both moving in the same direction, and as the cut-off rock-shaft *s a* reverses the direction of motion of the cut-off valve, while the main valve moves on the same as if it were connected direct to its eccentric, therefore, the valves move in opposite directions. But when the cut-off eccentric has crossed its line of centres, it moves rod S in a direction opposite to that in which the main rod R is moving, and its rock-shaft reverses the direction of motion of the valve; hence, both valves move together until the main eccentric, as before stated, also crosses the line of centres of the engine.

The proportions of the parts, in Fig. 3215, are for an engine having a cylinder of 14 inches diameter and 24 inches stroke, the throw of both eccentrics being 1½ inches, giving to each valve a travel of 3 inches. These proportions give the latest points of cut-off at five-eighths of the stroke, this being the latest the engines are designed to have. Earlier points of cut-off are effected by advancing the cut-off eccentric.

We may, however, for the present, confine our attention to the action of the mechanism when in position for the latest point of cut-off, and in Fig. 3215 we have the position of the parts when the cut-off is effected, and it is seen that the main and cut-off valves are moving in opposite directions, and that its cut-off eccentric is near the point at which it moves the cut-off valve most rapidly; hence it follows that the cut-off is effected rapidly. This construction permits of the employment of a very short valve travel, thus reducing the duty of operating the valves.

As the main valve is driven by an eccentric that is fixed to the

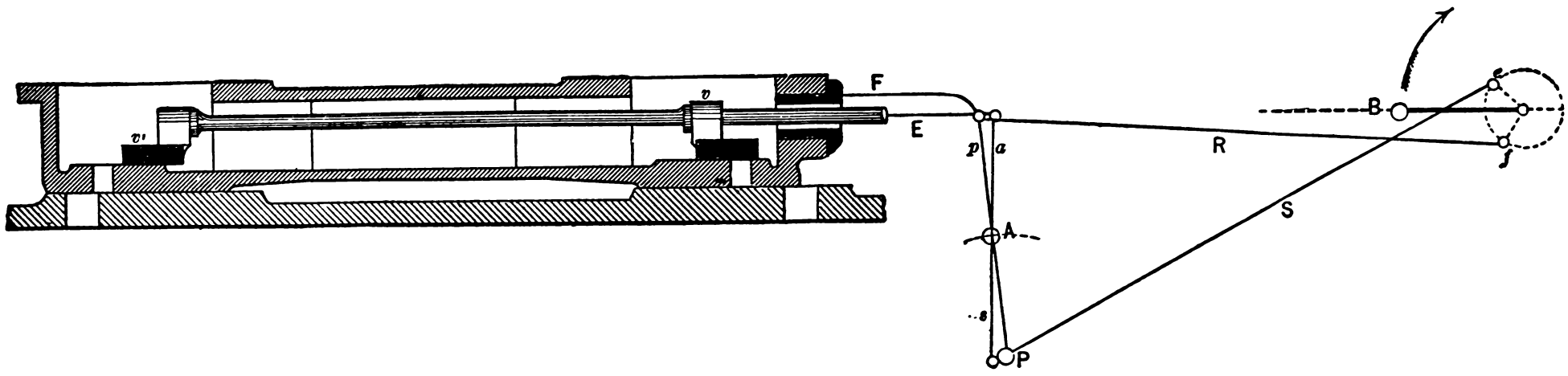

Fig. 3214.

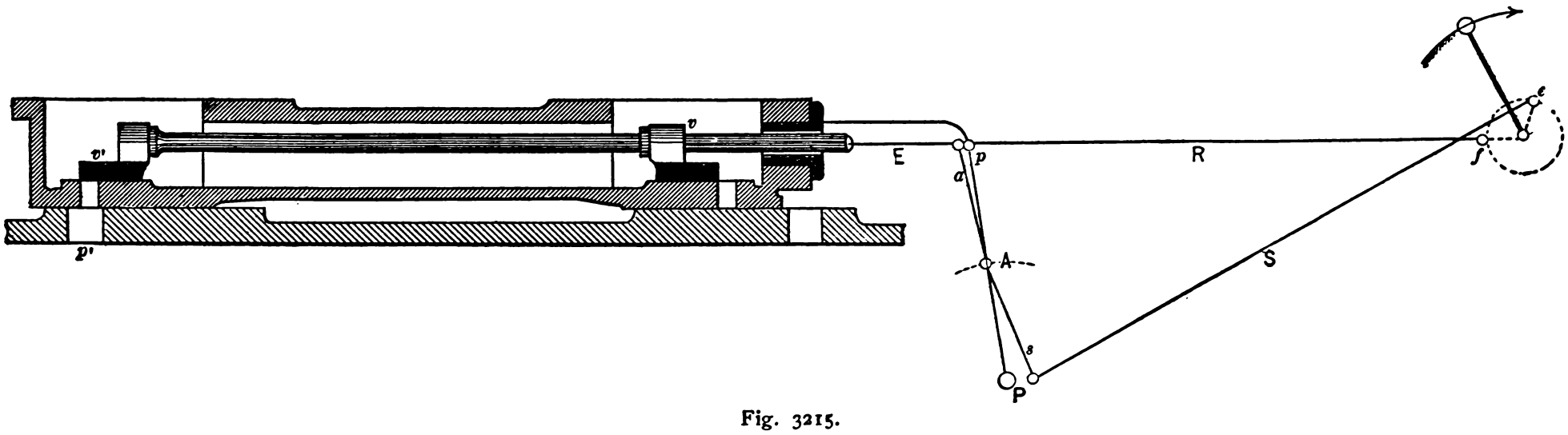

Fig. 3215.

crankshaft, its amount of travel is constant, and its ends pass over the ends of its seat; and as the ends of the valve pass alternately over the ends of its seat, therefore at all points of cut-off the

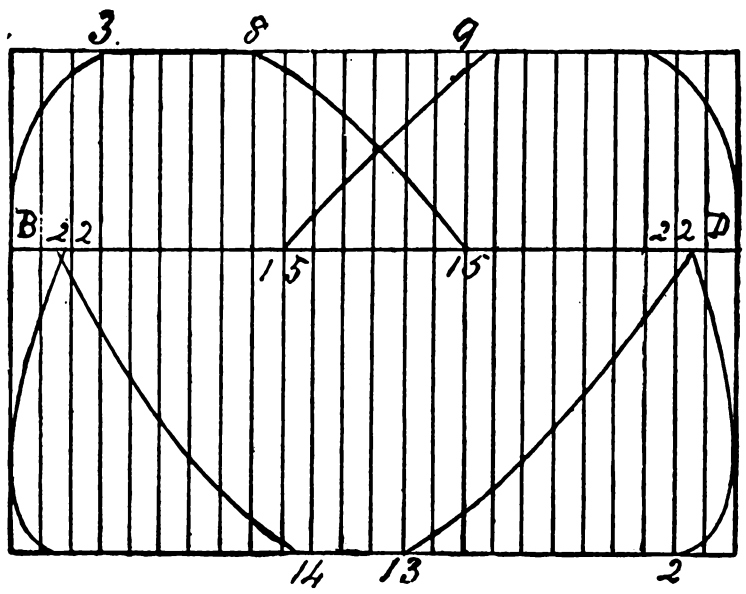

Fig. 3216.

tendency to wear the seat unevenly is avoided (this tendency existing when the stroke of a valve is decreased).

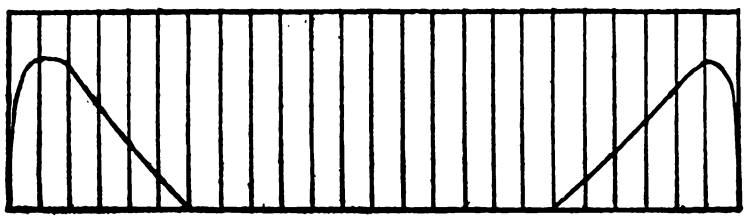

Fig. 3217.

In order that the cut-off valve may similarly pass over each end of its seat on the main valve, the shoulders on the faces are provided.

open full at the third inch of piston motion, remains full open up to the eighth inch, and cuts off at the fifteenth.

For the crank end, the port is full open at the third inch, remains open for 8½ inches, and cuts off at fifteen.

The amount of compression is 1½ inches at each end, the equalization being effected by unequal laps at the two ends of the main valve.

The exhaust opening is, it is seen, greater than the steam port opening.

The lead, compression, cushion, and exhaust being governed by the main valve, having a constant amount of travel, obviously remain constant for all points of cut-off.

The steam port openings when the cut-off occurs at quarter-stroke are shown in Fig. 3217, and the points of cut-off are, it is seen, equalized.

Fig. 3218 illustrates the mechanism constituting the governor, or speed regulator, which advances the position of the cut-off eccentric upon the crankshaft. Two levers, *a a*, are pivoted at their ends *b* to arms of the governor-wheel. Upon these levers, and adjustable along their lengths, are the respective weights A A. The ends of levers *a a* connect, by ball and socket joint, to the links B B, and these are attached, by ball and socket joint, to C, which is in one piece with the cut-off eccentric, the latter being a working fit on the crankshaft. When the wheel revolves, the centrifugal force generated by the weights A A and the levers *a a* will cause these parts to move outwards, as denoted by the dotted lines in the upper part of the figure. This causes the links B B to advance the cut-off eccentric upon the shaft in the direction of crank revolution, thereby hastening the point of cut-off, as has already been explained.

The outward motion of the arms *a a* is resisted by the springs F F, and it follows that when the engine is motionless, or is running too slow to enable the centrifugal force to overcome the tension of the springs, these springs will hold the cut-off eccentric at the position in which it effects the cut-off at the latest point in the stroke, the springs being under tension, and the weights A being held against the wooden buffers at *f*.

The further the weights are situated from the pivoted ends of the lever, the greater the effectiveness of the centrifugal force

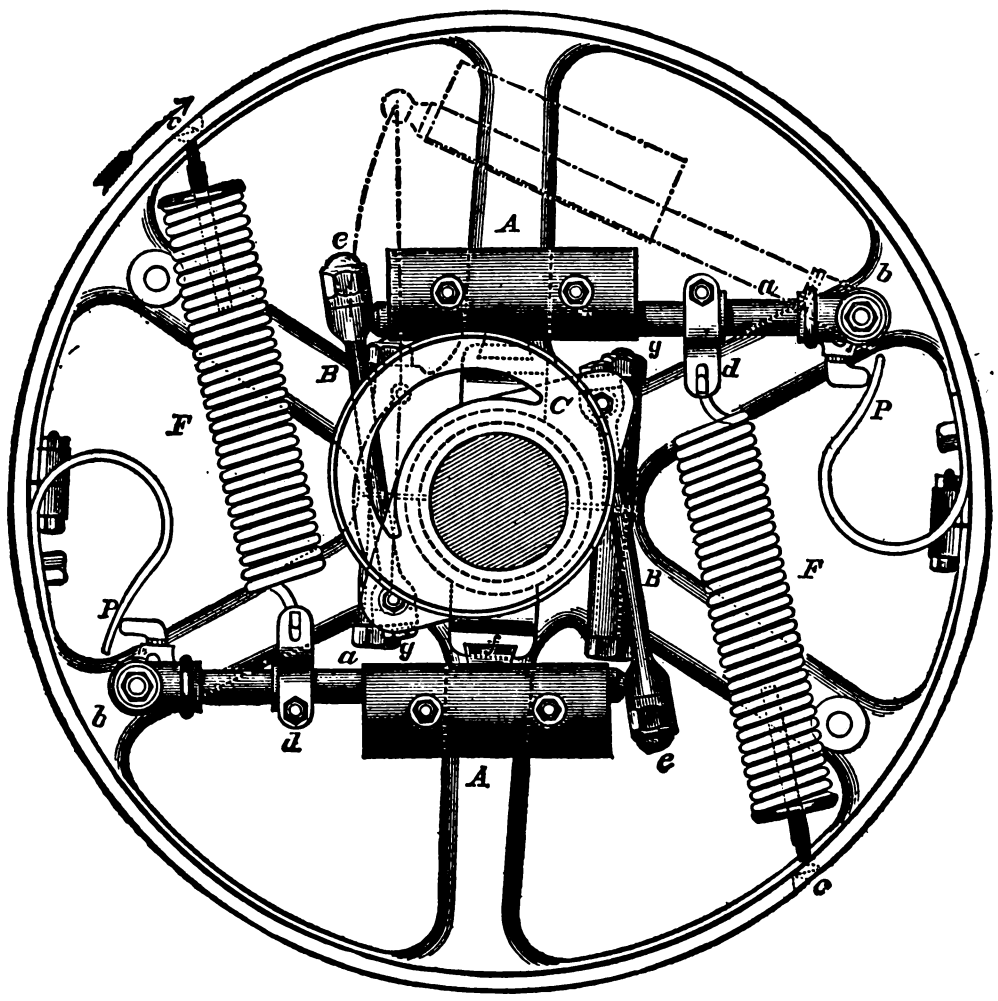

Fig. 3218.

Fig. 3215 shows the port openings for the cut-off at ⅝ stroke, and it is seen that, for the head end B of the cylinder, the port is

generated by them at a given speed of governor revolution; and the further out the levers swing, the greater the amount of centrif-

ugal force generated, because the weights revolve in a larger circle, and, therefore, at a greater velocity.

On the other hand, however, the outward motion of the levers and weights can only occur by distending the springs F F, and the power required to do this increases in proportion as the springs are distended.

While the governor is at rest, the force of the springs is static, but as soon as the parts revolve, this force becomes centripetal; hence we have, so far as the weights and springs are concerned, two opposing forces—one centripetal and the other centrifugal; and the most perfect adjustment of the weights and spring tension is that in which, at a given speed of revolution, these two forces are equal in amount throughout the whole range of movement of the springs and levers.

Now, suppose the parts are so accurately proportioned, and the adjustment so correctly made, that this equilibrium of the opposing centrifugal and centripetal forces is established; and if the power required to operate the valve is equal in amount at all points of cut-off, the action of the governor would be perfectly isochronal, or, in other words, it would maintain the engine speed equal under all changes of load.

In the Buckeye engine, the travel of the valve is constant in amount for all points of cut-off, and the power required to operate it is, therefore, equal. But there is another element to be considered, inasmuch as that the weighted levers act (as they move to different positions) at a varying leverage to the eccentric, with the following result:

When the weighted levers are in the positions in which they are at the greatest leverage to the points of connection on the eccentric, they will obviously exert more force in proportion to the centripetal force than they would when in their positions of least leverage, and (assuming the power required to operate the valve to be equal for all points of cut-off) the engine speed will increase, because, in order to maintain a constant and equal speed, the centrifugal force must, throughout the whole range of lever movement, bear a constant and equal proportion to the total force resisting it, this total force including the power required to operate the valve as well as that required to resist the tension of the springs.

In the Buckeye engine, the resistance offered by the friction of the cut-off eccentric and valve gear is centripetal in its tendency. This tendency is of greatest effect when the levers *a a* are at their extremes of movement, and the auxiliary springs P P, Fig. 3218, are employed to correct it.

These auxiliary springs are intended to start the levers out at the proper speed when the tension given to the main springs is that proper to secure the best regulation during the outer half of their range of movement, where it is mainly confined when the engine is properly loaded. Under such an adjustment of tension, it was found that the centripetal tendency of the resistance offered by the cut-off valve and gear, being augmented in effect in an increasing ratio from mid-movement inwards, in proportion to the increasing acuteness of the angle formed by the links with the eccentric ears, required more than the mean working speed to overcome it, and the auxiliary springs are made of such force as to just overcome this undue frictional centripetal tendency. They leave contact at mid-movement, where they are no longer needed, the above tendency being then at its minimum. Its increase from mid-movement outwards is provided for in the tension of the main springs, which is increased on that account to obtain a diminished ratio of increase of spring force.

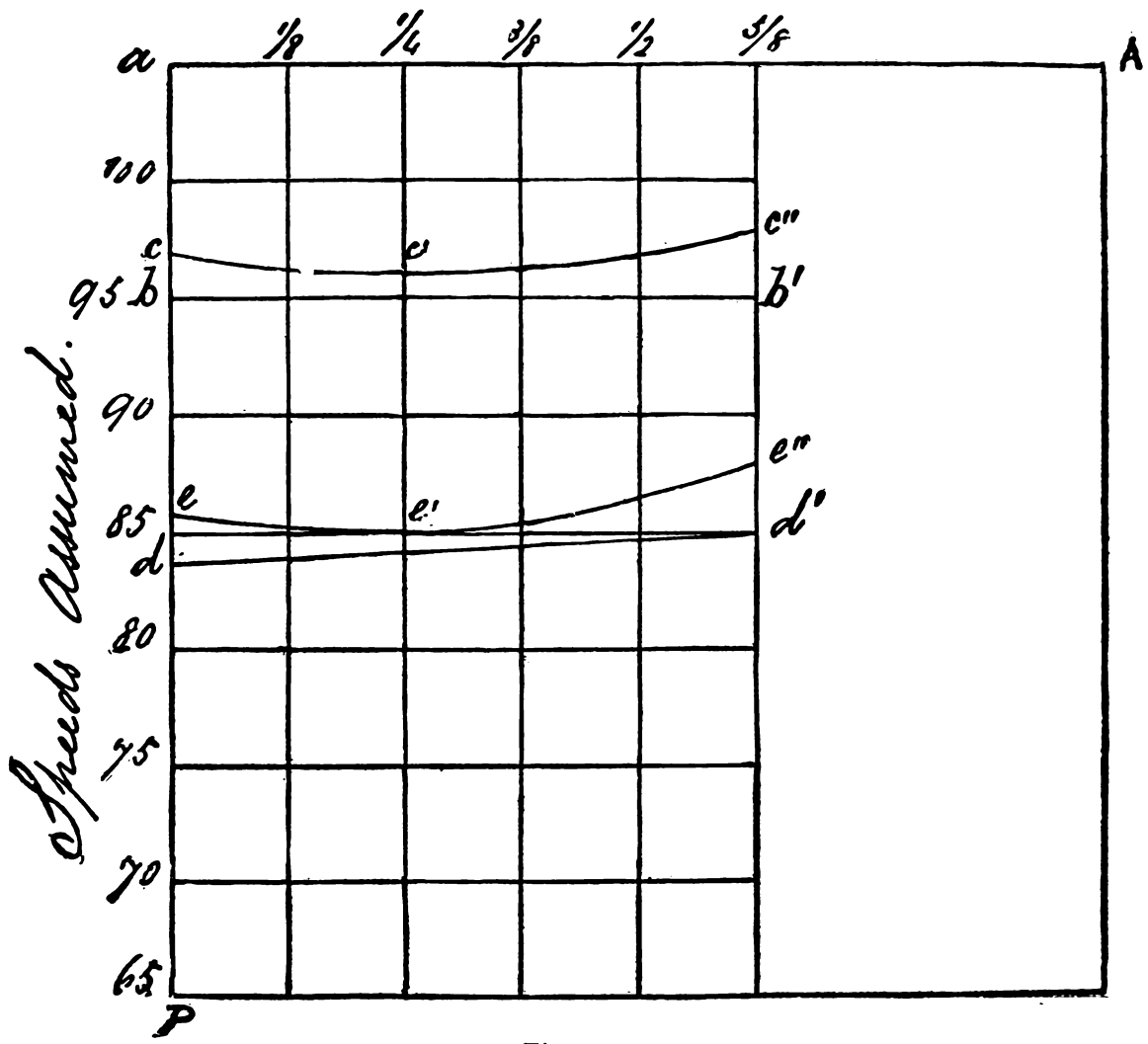

Fig. 3219.

The range of lever motion is sufficient to regulate the speed under all changes of load under all ordinary conditions of boiler pressure, and it is obvious that the ratio of the centripetal to the centrifugal force will remain the same whatever changes may occur in either the engine load or the boiler pressure.

To graphically illustrate the variation of the effective centripetal and centrifugal forces, and the use of the auxiliary springs, let the line *a* A, in Fig. 3219, represent the length of the piston stroke divided by lines representing points of cut-off at $\frac{1}{8}$, $\frac{1}{4}$, $\frac{3}{8}$, $\frac{1}{2}$, and $\frac{5}{8}$ stroke. The vertical line *a* P is equally divided into lines representing speeds.

Now, suppose that while the levers move from the inner to the outer end of the range of motion, the distance of the centre of centrifugal force from the centre of the shaft is doubled, and the amount of centrifugal force will be doubled. And if the total spring tension, resisting the centrifugal force, is also doubled at the same time, the two forces will increase in the same ratio, and

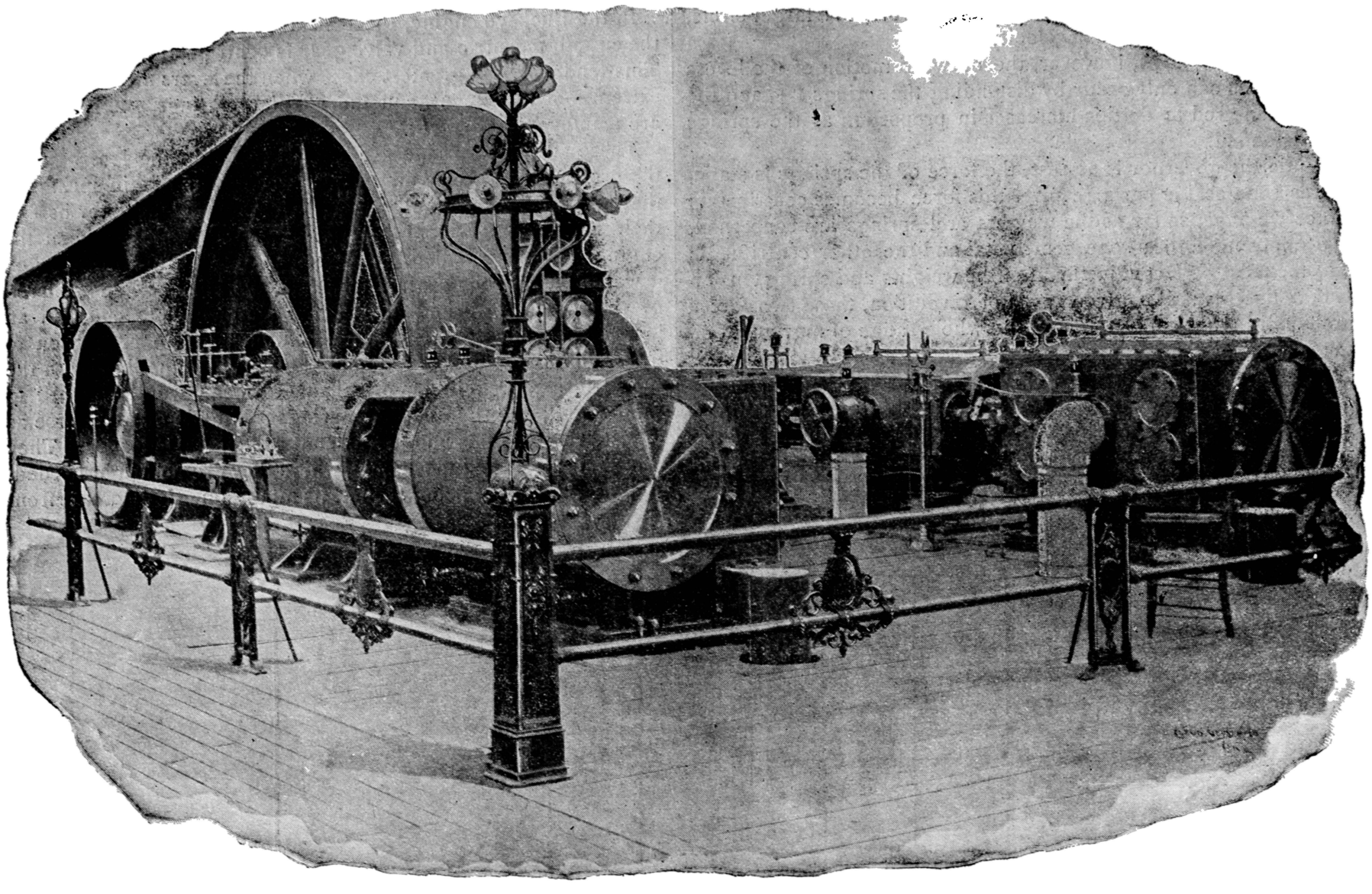

Fig. 3220.

the speed regulation will be isochronal. Such regulation may be represented, so far as the centrifugal force is concerned, by a line *b b'* parallel to *a* A.

Now, suppose that the centripetal friction would accelerate the speed at the earliest cut-off by an amount represented by the distance from *b* to *c* ; at $\frac{1}{4}$ cut-off by the distance *c'*, and at $\frac{5}{8}$ cut-off by the distance *c''* from line *b b'*, and through these points we may draw a curved line representing, in its curvature upwards, the amount to which the centripetal friction would accelerate the speed ; this acceleration being represented, at $\frac{1}{4}$ cut-off, by the distance *b' c'* ; at the earliest cut-off by the amount *b c* ; and at $\frac{5}{8}$ cut-off by the distance *b' c''*.

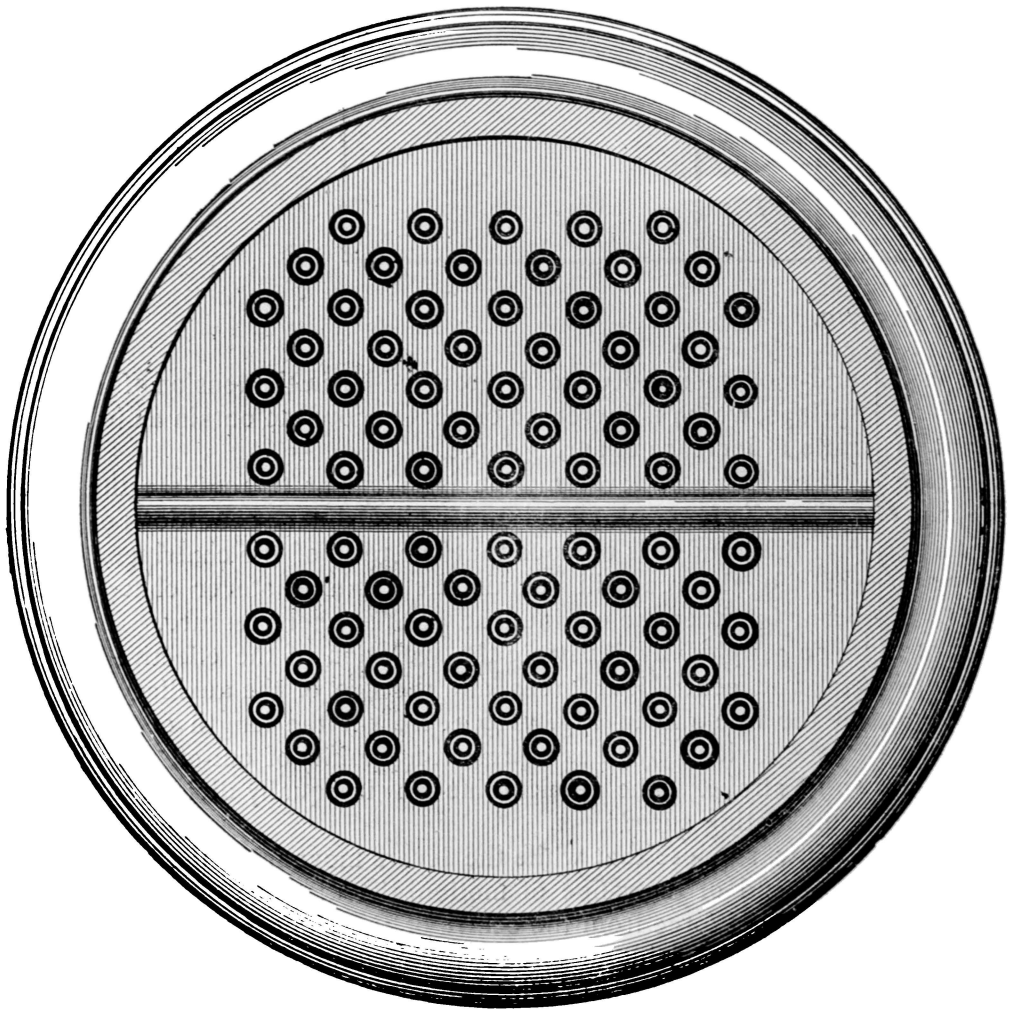

Fig. 3223.

This shows close regulation at and near *c'*, but near *c* there will be a change of speed accompanying changes of cut-off, and to remedy this, more spring tension is required.

From *c'* to *c''*, the speed variation is shown, by the upward curvature of the line, to be in the wrong direction, because, while the point of cut-off would be passing from *c'* towards *c''*, the speed would be accelerating, whereas the engine load is increasing, and its tendency is, therefore, to decrease the speed ; hence, for this part, the tension is too great, because, with less tension, the diminution of spring force would be more rapid, which would compensate for the increasing effectiveness of the centripetal friction.

By the application of the auxiliary springs P P, Fig. 3218, the speed may be cut down from *c''* to *b'*. This will give stability of speed throughout all points of cut-off from $\frac{1}{4}$, or *c'*, to $\frac{5}{8}$, or *b'*, leaving a margin of variation for points of cut-off between $\frac{1}{4}$ and zero, which margin is represented by radius *d c*.

This margin may, however, be diminished, to any required extent, by giving a spring tension that would give the fastest speeds at the latest cut-offs, as represented by the line *d d'*, and on this line we may draw the assumed frictional curve *e e' e''*, corresponding to line *c c' c''*, and it is seen that from *e* to *e'* it is sufficiently isochronal, and by changing *e' e''* to *e' d'*, by means of the auxiliary springs, the regulation becomes sufficiently isochronal throughout the whole range of cut-off.

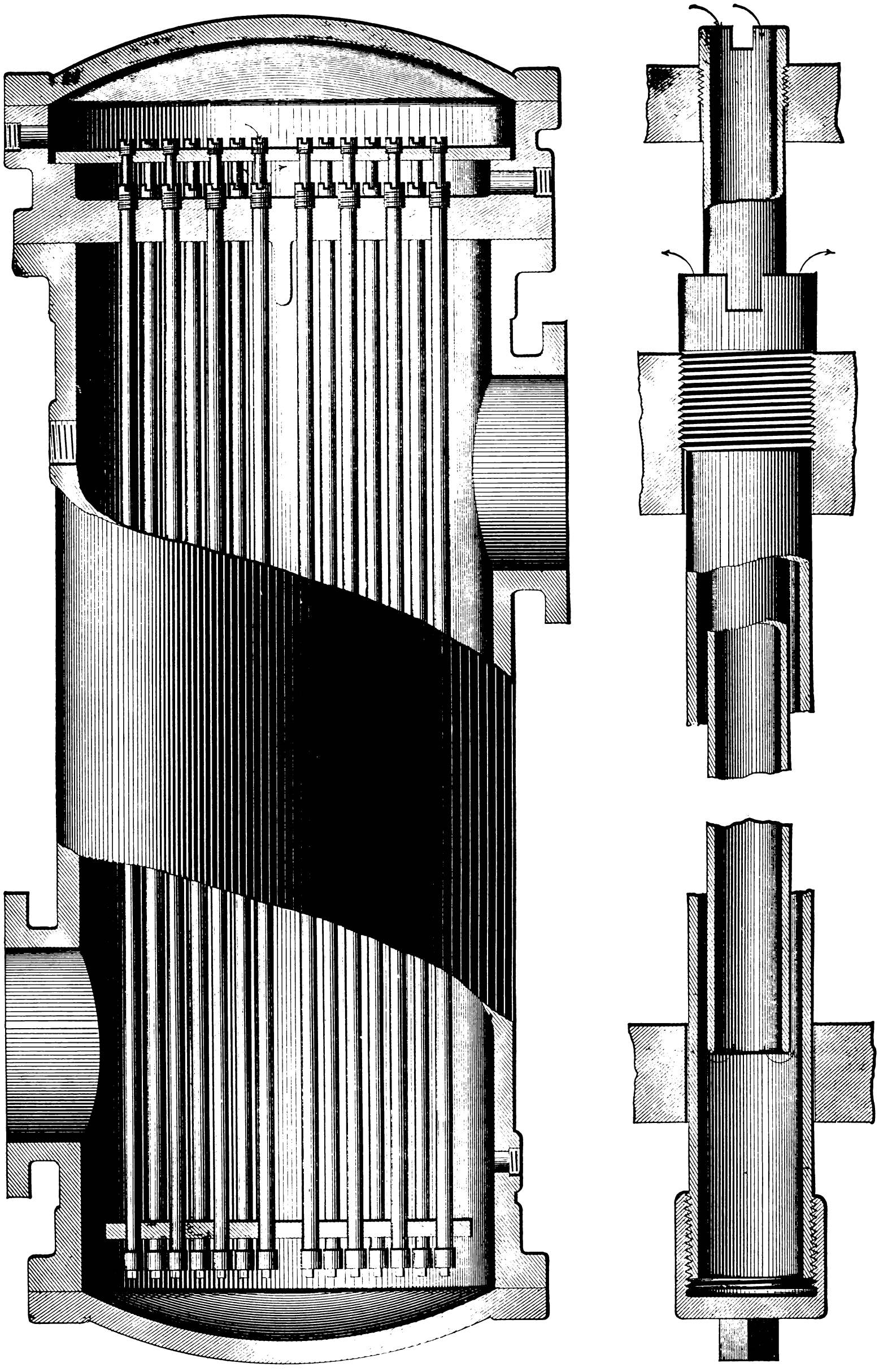

Fig. 3222.

Fig. 3220 represents a triple-expansion engine of 1,250 horse-power, exhibited by the Buckeye Engine Company at the Columbian Exhibition.

A recent improvement in the design of this engine, and one that is finding great favor, is shown in Fig. 3221 (frontispiece), which is a triple-expansion engine arranged tandem, with the receivers shown in position, and the passage of the steam throughout the engine marked by the arrows. The valves for all three cylinders are operated by one pair of eccentrics, the motion of the valve gear, so far as the admission, expansion, etc., of the steam are concerned, corresponding to that already explained with reference to the flat-valve engine. In this improved engine, however, piston valves are employed, the cut-off valve working inside the main valve.

An enlarged view of the reheater of the triple-expansion engine shown in Fig. 3220 is shown in Figs. 3222 and 3223, from which it will be seen that the live steam passes through a series of tubes that are enclosed in tubes of larger diameter, the latter being surrounded by the exhaust steam, which is thus reheated by the live steam from the boiler.

Suitable drain pipes are provided for conducting away the water of condensation.

The construction of the Proell cut-off valve gear, which has been received with much favor in England, is shown in Figs. 3225 and 3226, where it is shown in connection with a Corliss valve.

It comprises a double-beat valve, which governs the admission of steam to the steam chest. At the commencement of each stroke of the piston this valve is raised positively by the action of an eccentric; the closing is effected by a trip gear under the control of the governor, and the time of its occurrence depends on the load of the engine. There is, of course, a second distributing valve, which directs the steam alternately to each end of the cylinder, and controls the exhaust.

One form of this gear is illustrated in the figures, but it also takes many other shapes, according to the type of engine with which it is employed. In the case before us the cylinder is vertical, as seen in Fig. 3225, and has a small valve chest cast on one side near the base. In this chest there works a Corliss valve, shown in Fig. 3226 at *v*, operated directly and positively by an eccentric. This valve, it will be seen, unlike a slide valve, requires scarcely any clearance to move in, and hence when the Proell valve closes there is scarcely any steam between the two valves. The result is that the clearance space is practically no

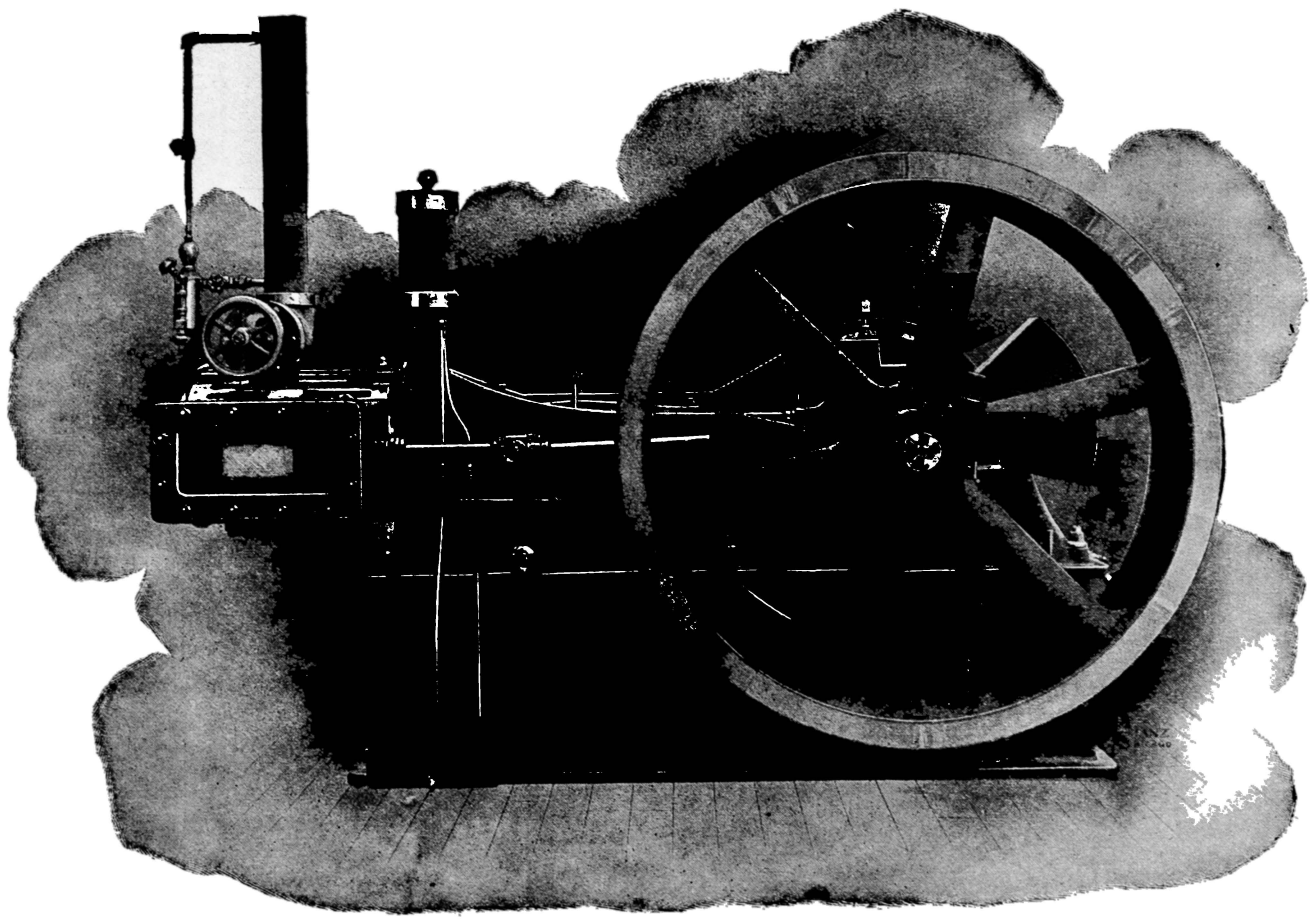

Fig. 3224.

Figs. 1 and 2, Plate XXX., represent the Ball centre-crank single cylinder and the Ball tandem compound engines, while Fig. 1, Plate XXXI., represents the tandem compound with the bedplate extended under the cylinders.

Fig. 3224 represents the centre-crank engine with automatic lubrication.

Important features in the design and construction of this engine are the construction of the slide valves, as shown in Plate XXXII.

The valves and ports are of the ordinary flat type working between two flat faces, through both of which the steam is admitted to the cylinder, as shown in Fig. 1, Plate XXXII., by the arrows. The valve is in two pieces and provided with circular rings, one fitting within the other and maintained steam tight by packing rings, as can be understood from Figs. 1, 2, 3, and 4. This produces a valve that may be said to be telescopically connected, each part being capable of self adjustment to its seat, taking up its wear, while being not only a balanced but a double-ported valve. The governor, Fig. 5, Plate XXXII., consists of a single moving piece suspended upon one pivotal point.

The connection between the two cylinders in the tandem compound engine is shown in Fig. 6, Plate XXXII., from which it will be seen that access to the glands is free and unobstructed.

greater than with an expansion valve working directly on the back of a slide, while the cut-off is more sudden and there is less leakage. This arrangement of valves is cheap to construct, and easy to maintain in order.

A vertical tandem compound engine, designed for high speed by Mr. J. C. Peache, is given in Figs. 3227 and 3228. The Peache engine is single acting, the balance of pressures on the pistons being in one direction—namely, downwards—although the arrangement of valve and the fact that the steam is admitted to the upper side of the high-pressure and the under side of the low-pressure piston at first suggests a double-acting engine. The single-acting effect is secured by the device which Mr. Peache terms the "controlling cylinder," this term being applied to the space comprised between the high and low-pressure pistons. It will be seen that when the parts are in the position in which they are shown in our section—namely, at the top of the stroke—the capacity of this space is equal to that of the high-pressure cylinder; while, when the pistons are at the bottom of the stroke, its capacity is that of the low-pressure cylinder. The steam contained in this controlling cylinder is thus compressed during the up stroke, and expanded during the down stroke. As this enclosed steam acts on the under surface of the high-pressure and the

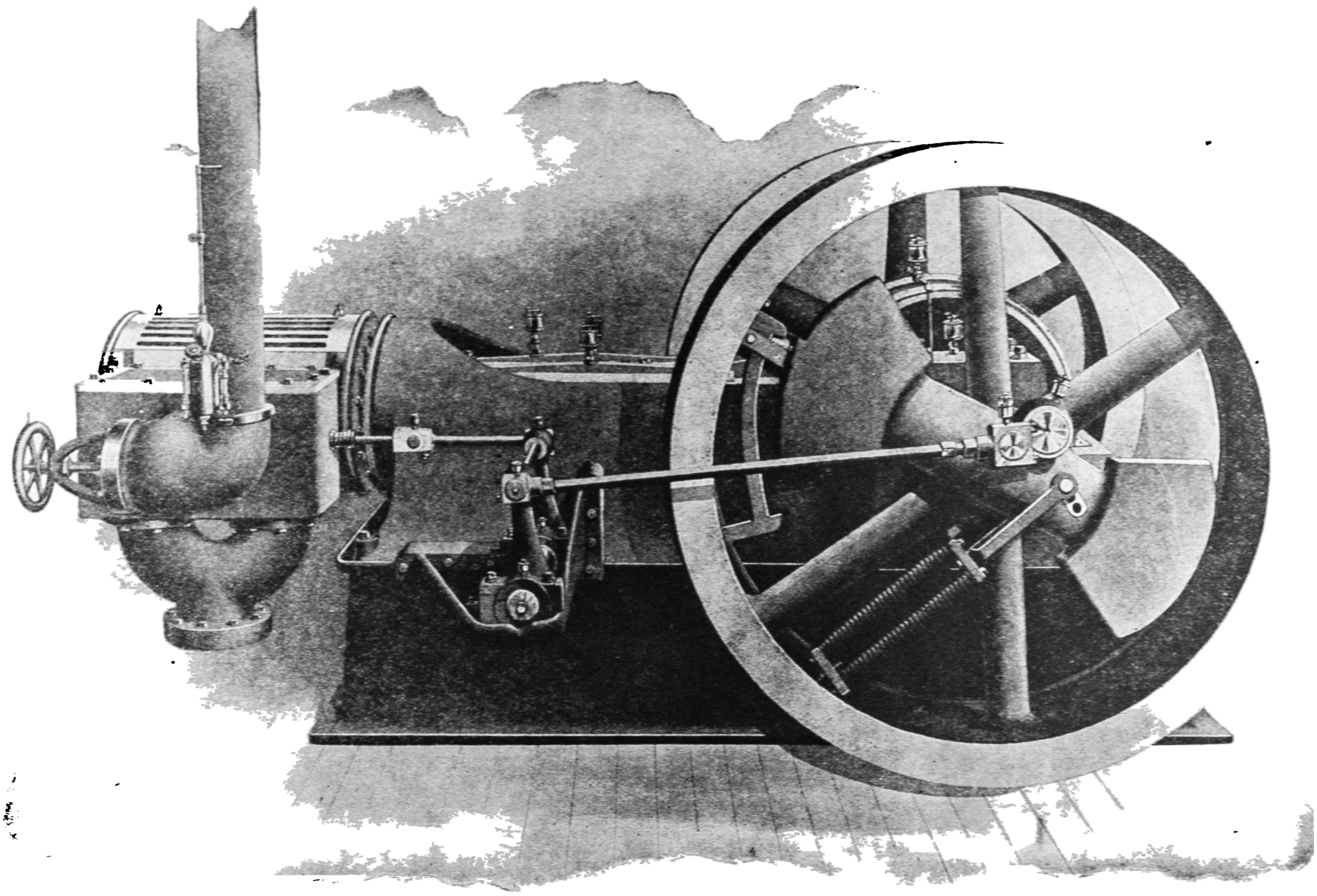

Fig. 1.

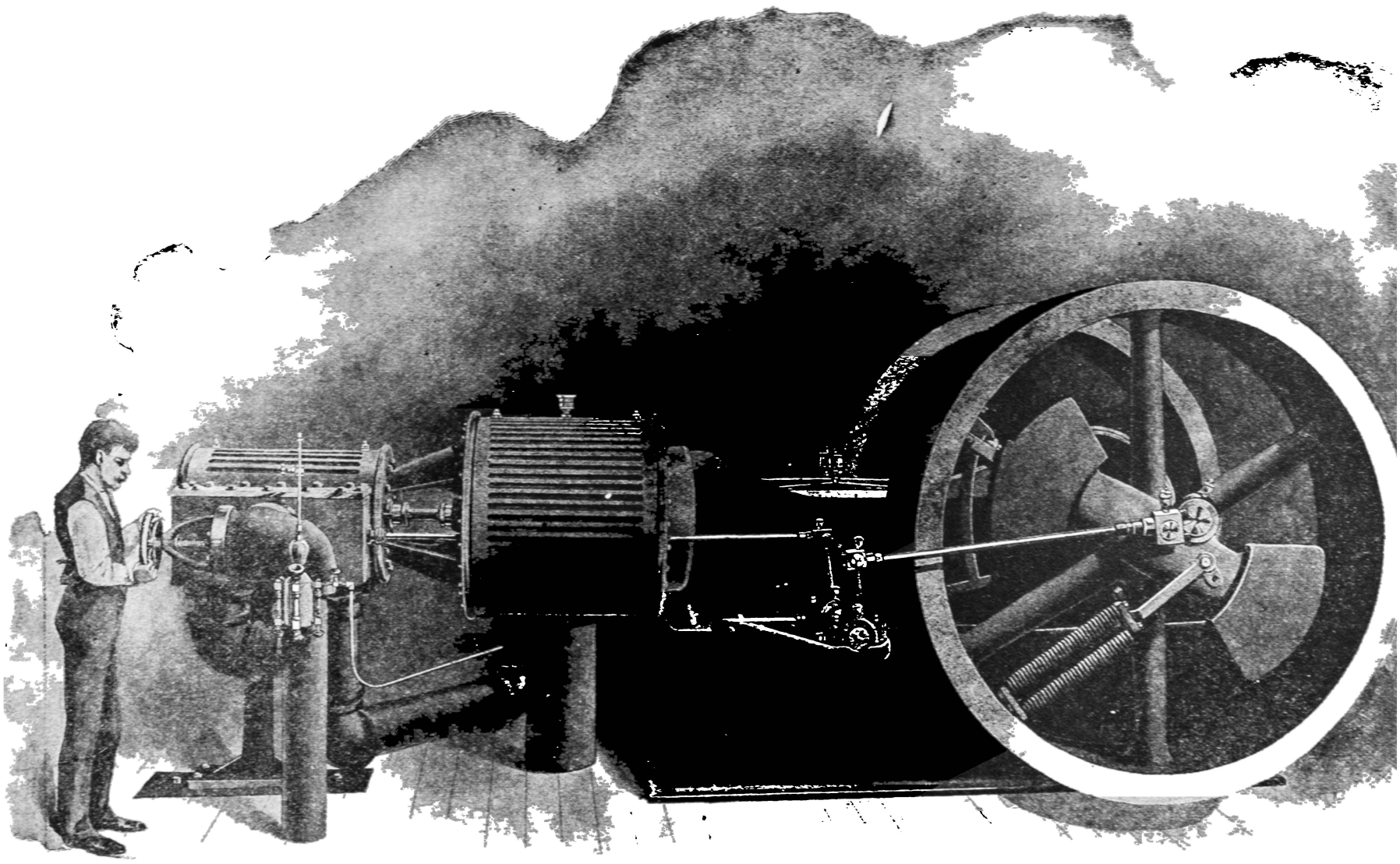

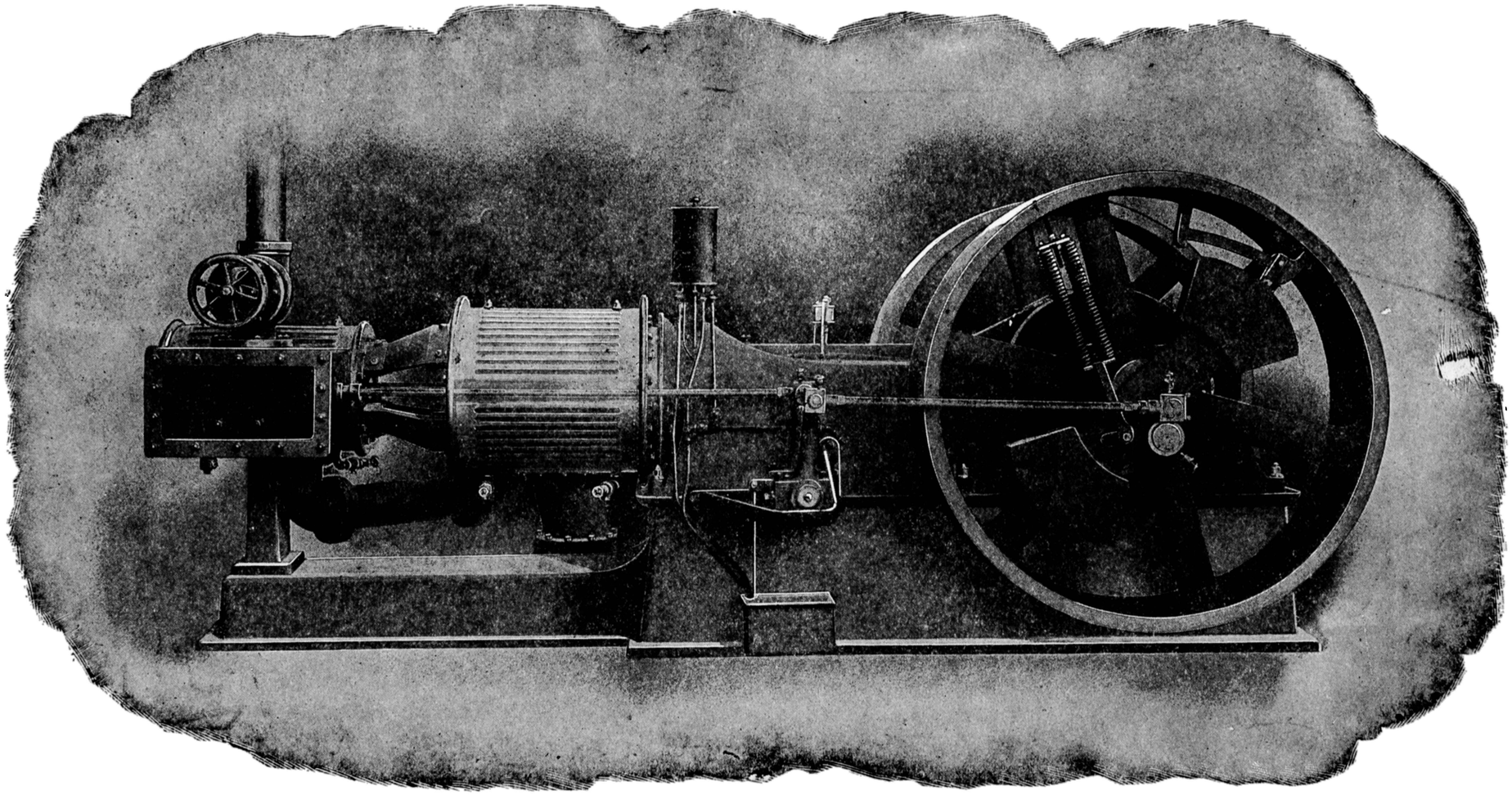

Fig. 1.

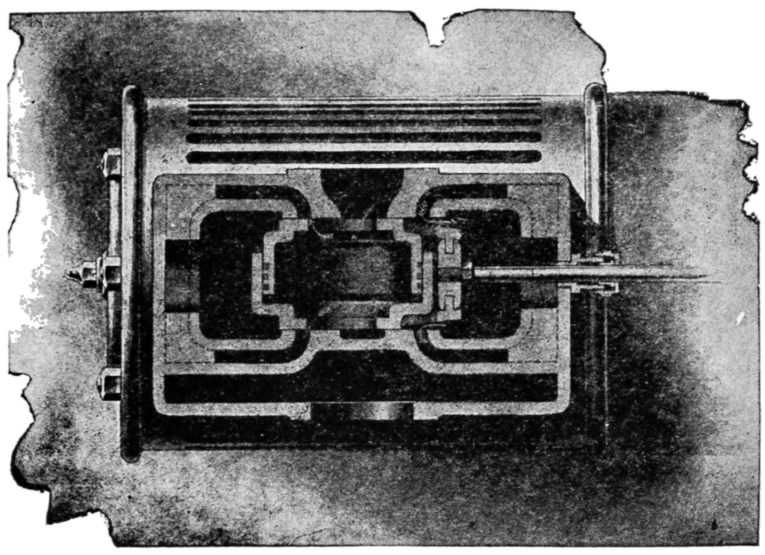

Fig. 1.

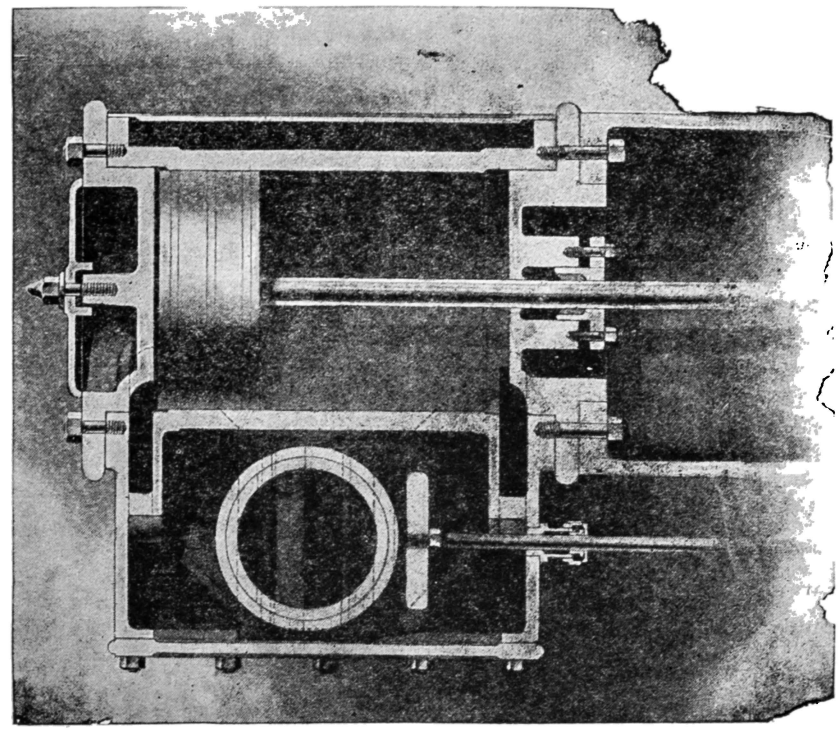

Fig. 2.

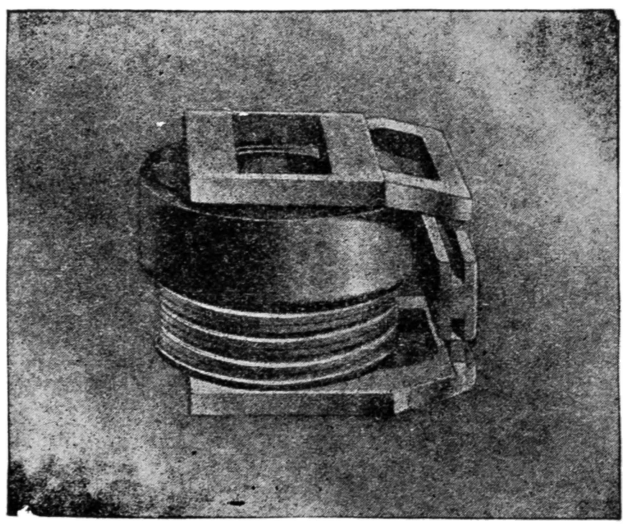

Fig. 3.

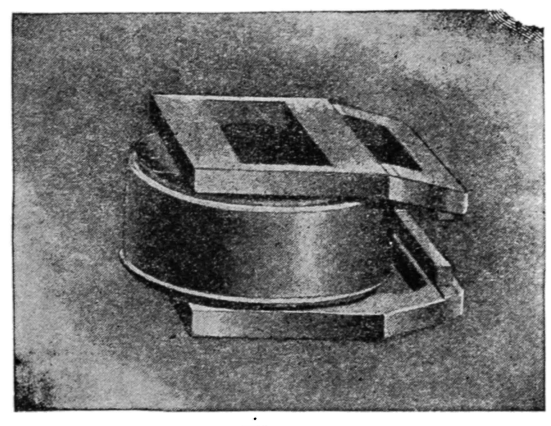

Fig. 4.

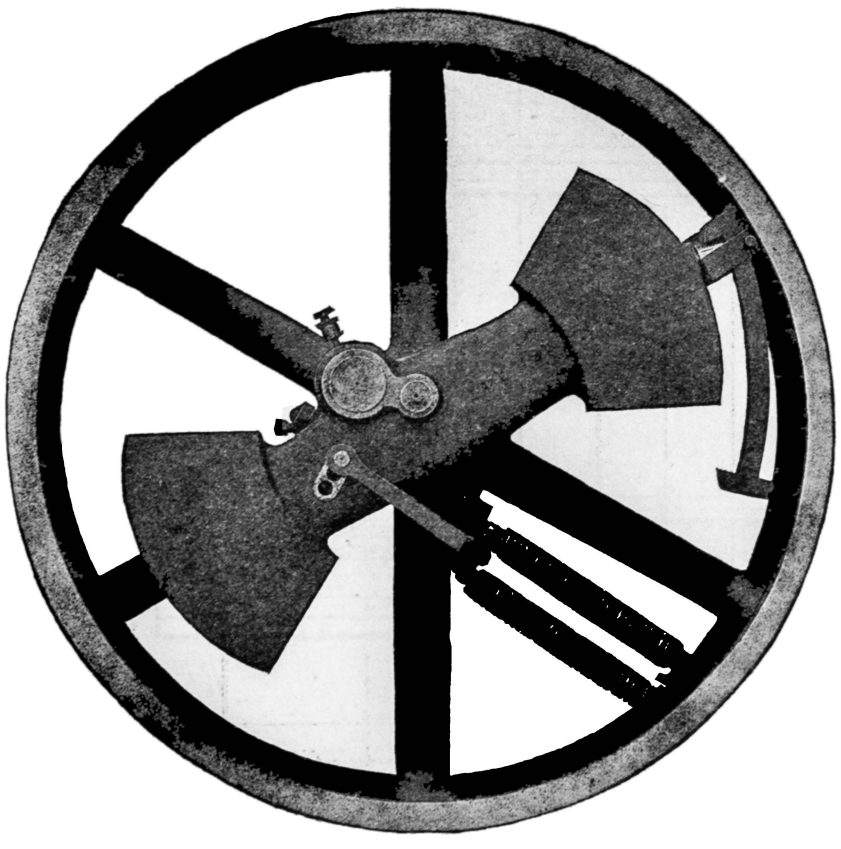

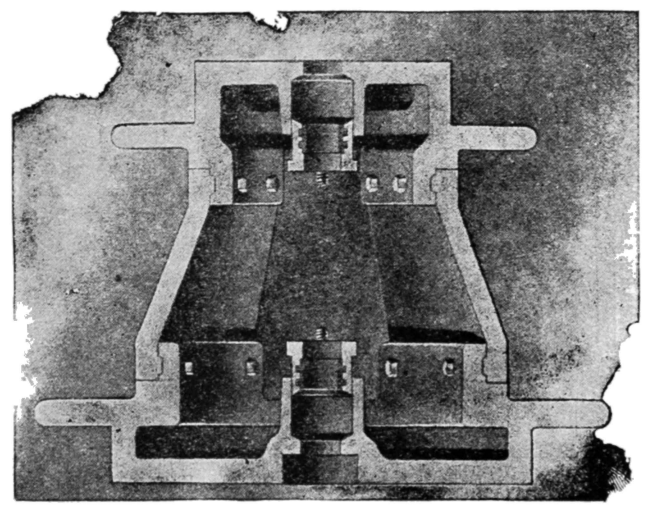

Fig. 6.

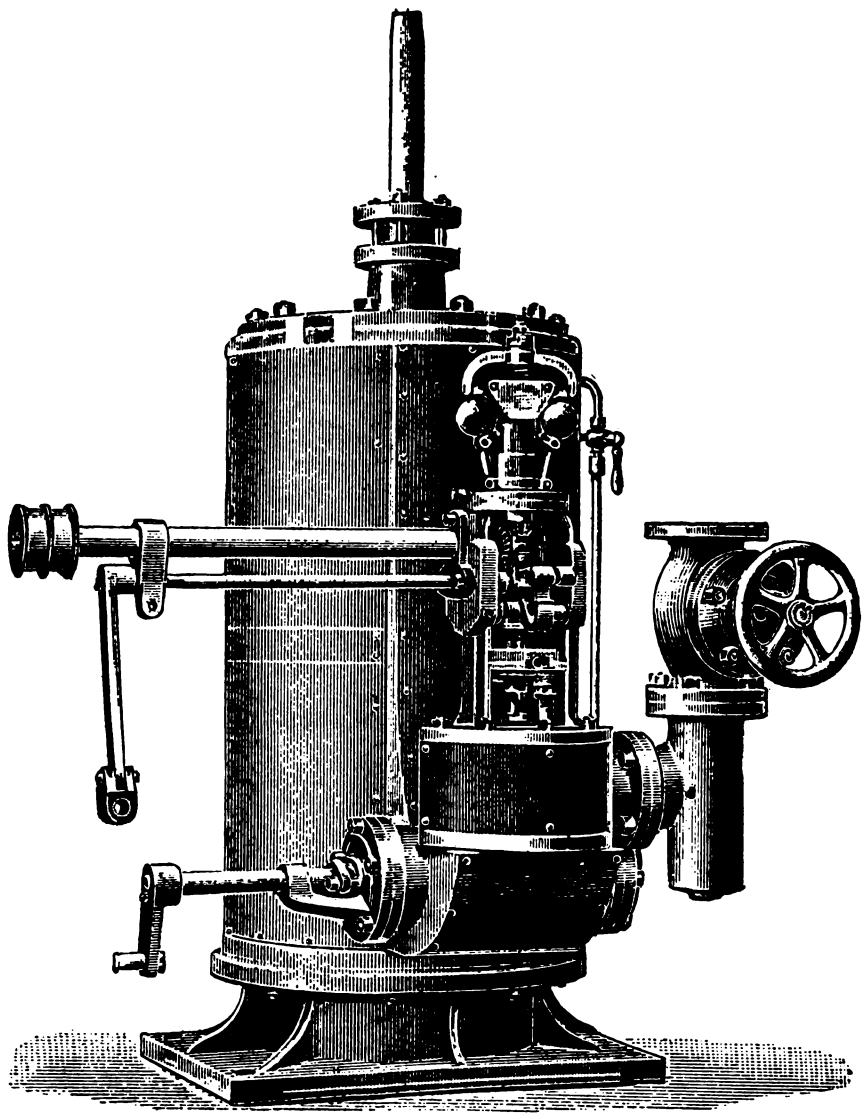

Fig. 3225.

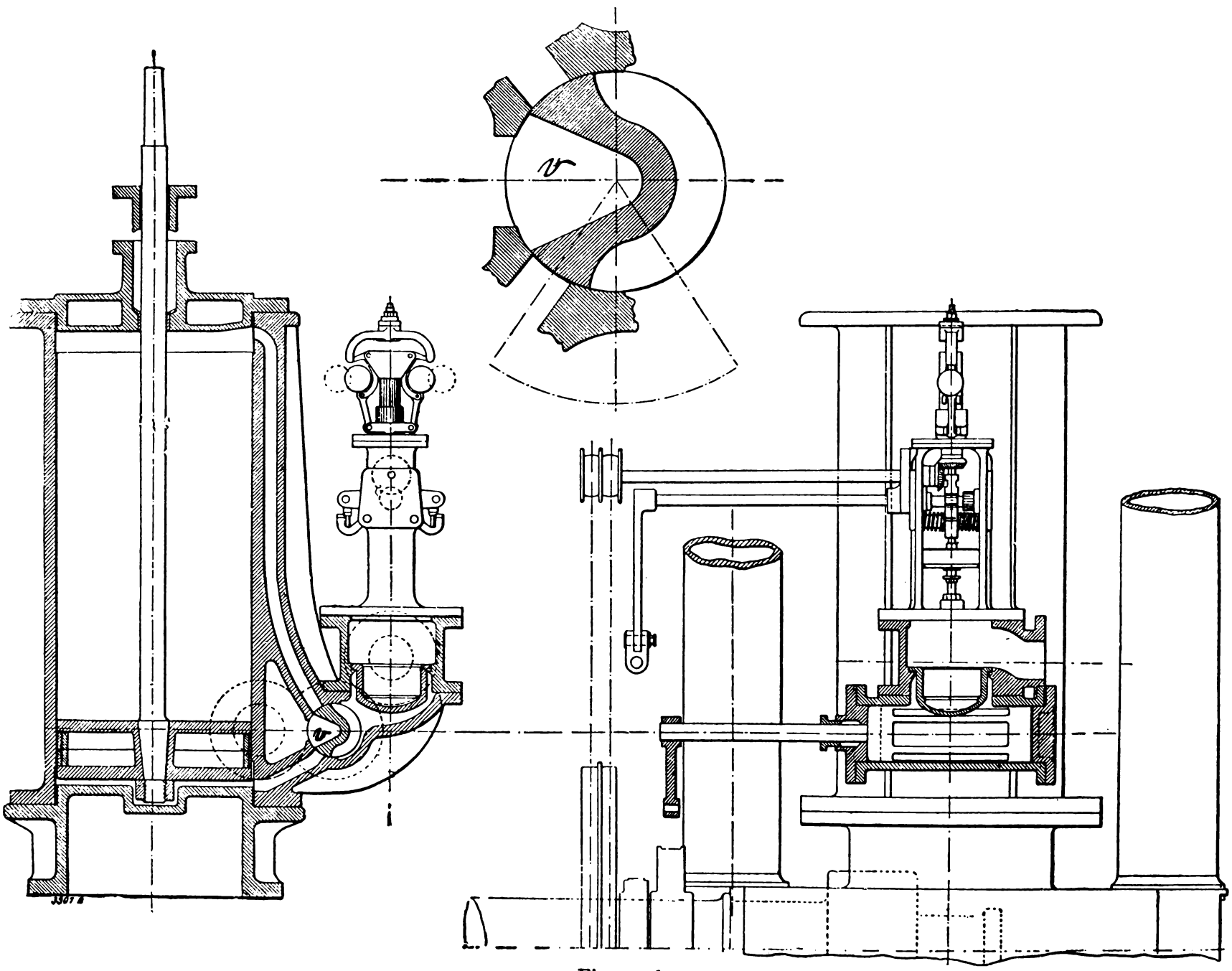

Fig. 3226.

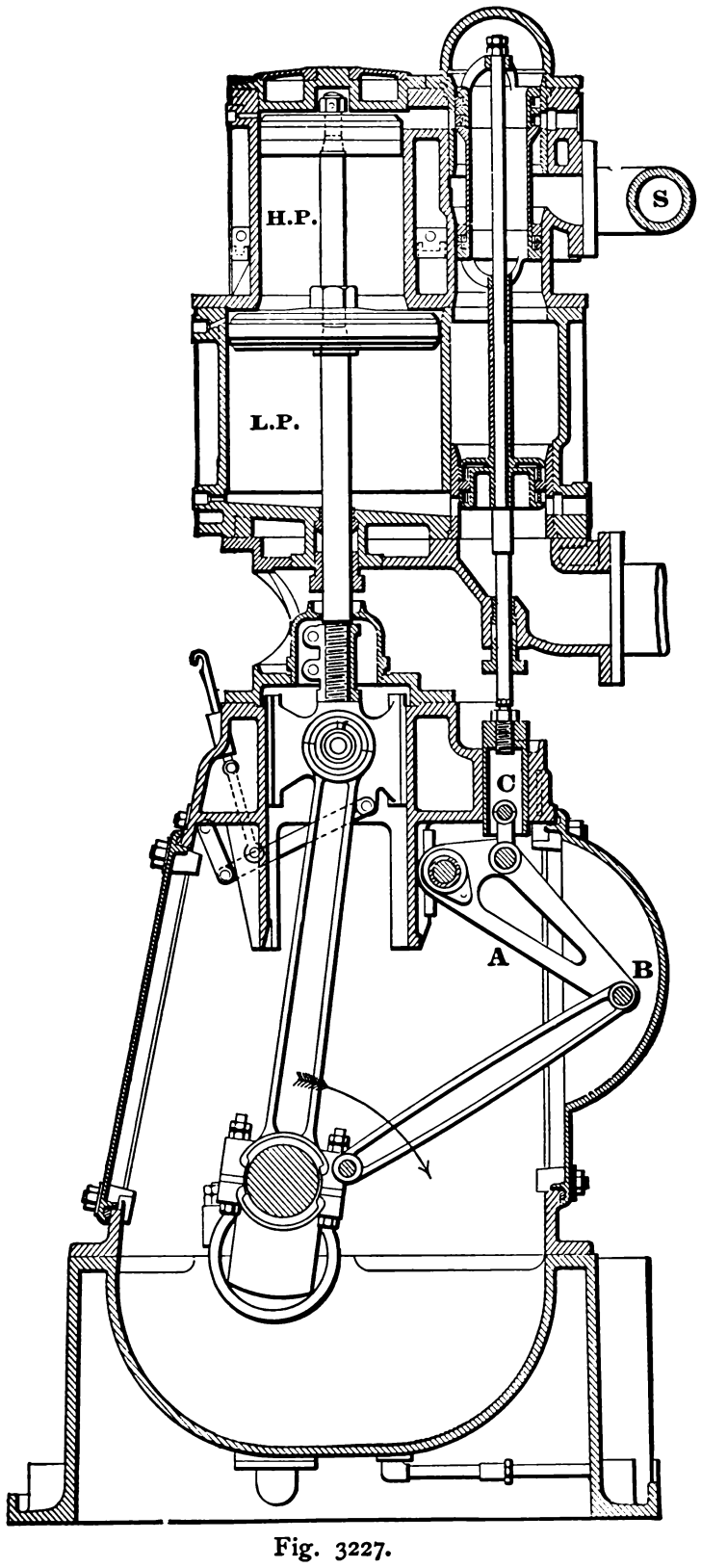

Fig. 3227.

PEACHE'S HIGH SPEED ENGINE.
Cylinders 10″ and 15″ diameter x $10\frac{3}{16}$ Stroke.

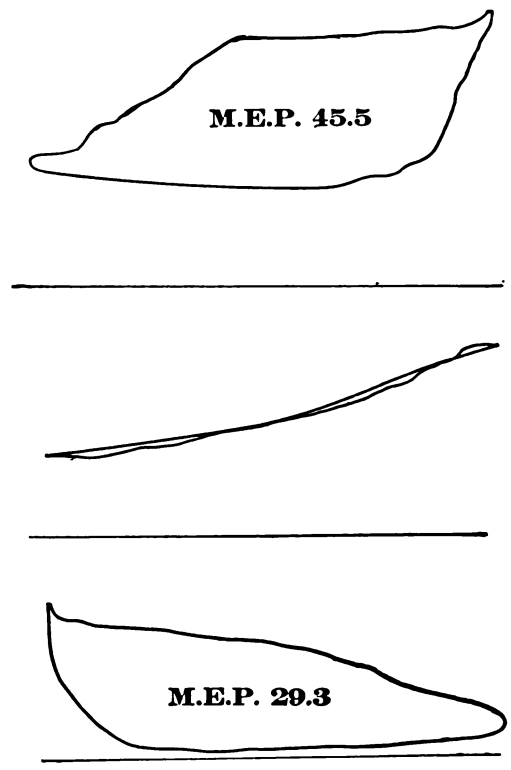

I.H.P. 81.3 Water per I.H.P. per Hour 22 lbs.
Boiler Pressure 130 lbs. M.E.P. reduced to L.P. piston 49.8 lbs.

Fig. 3228.

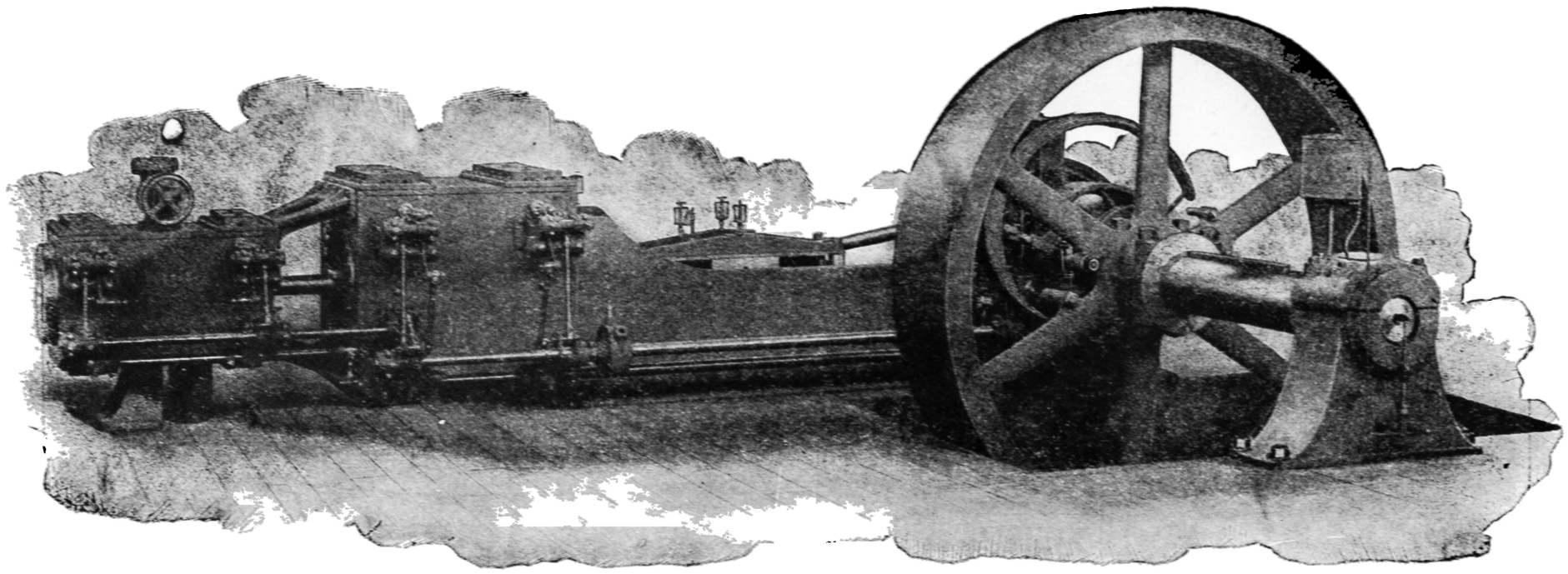

Fig. 3229.

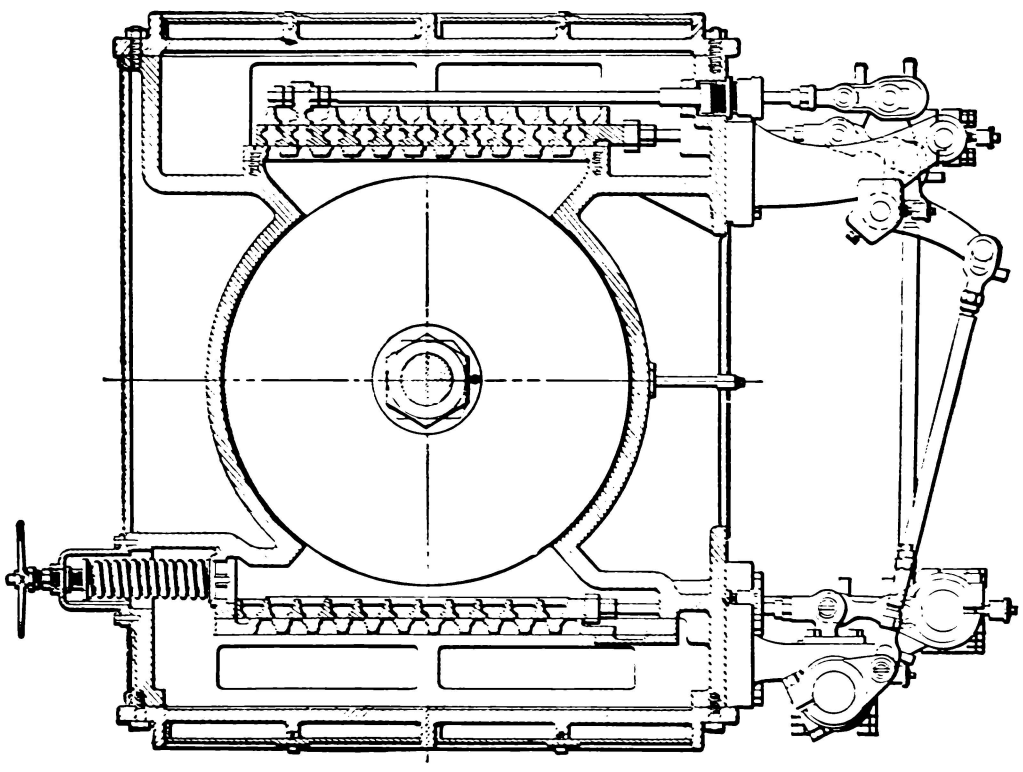

Fig. 3230.

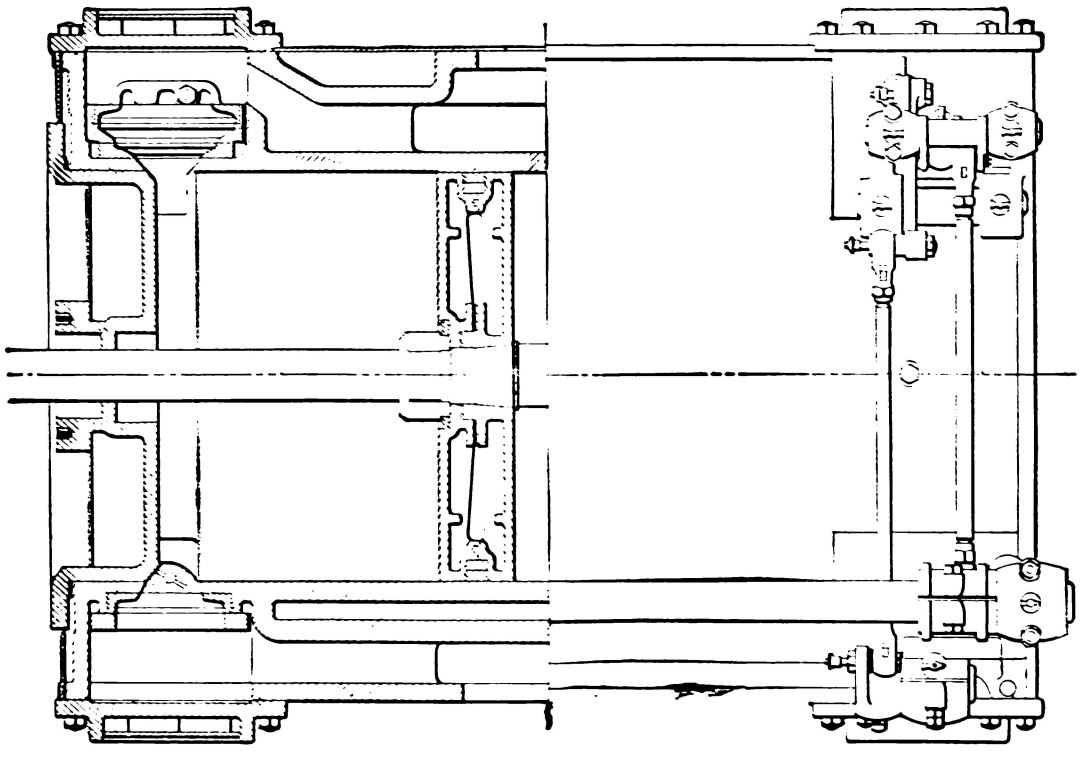

Fig. 3231.

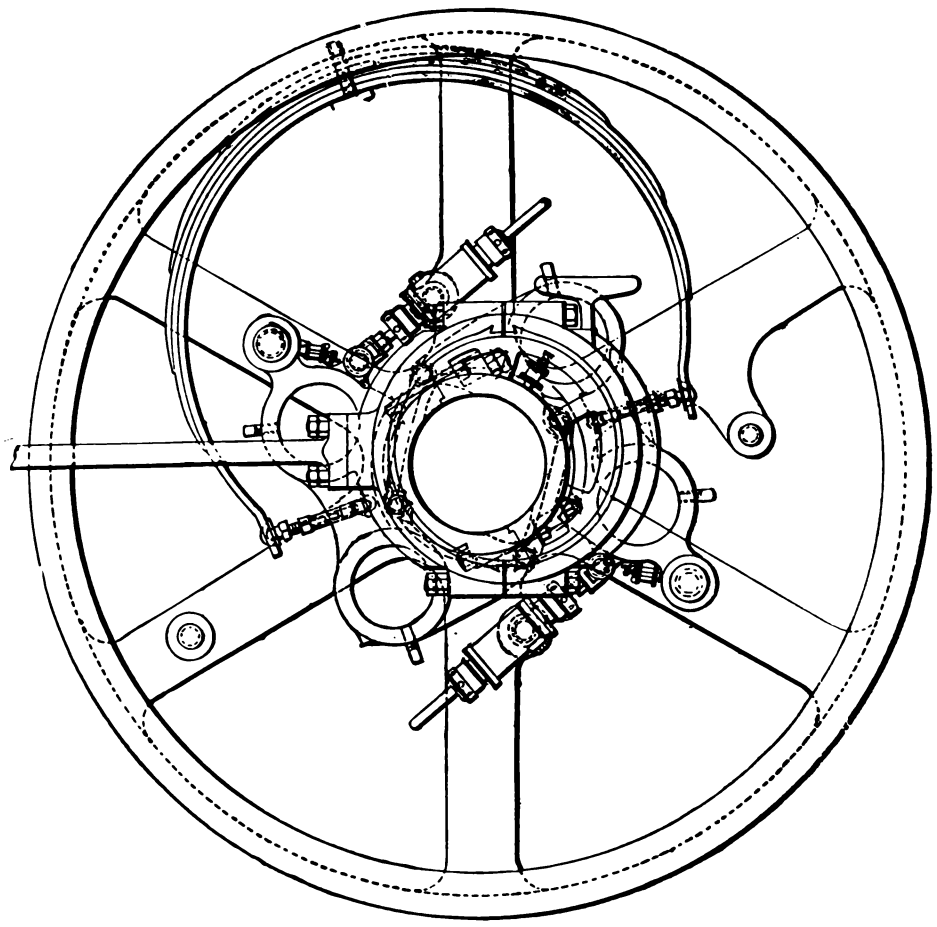

Fig. 3232.

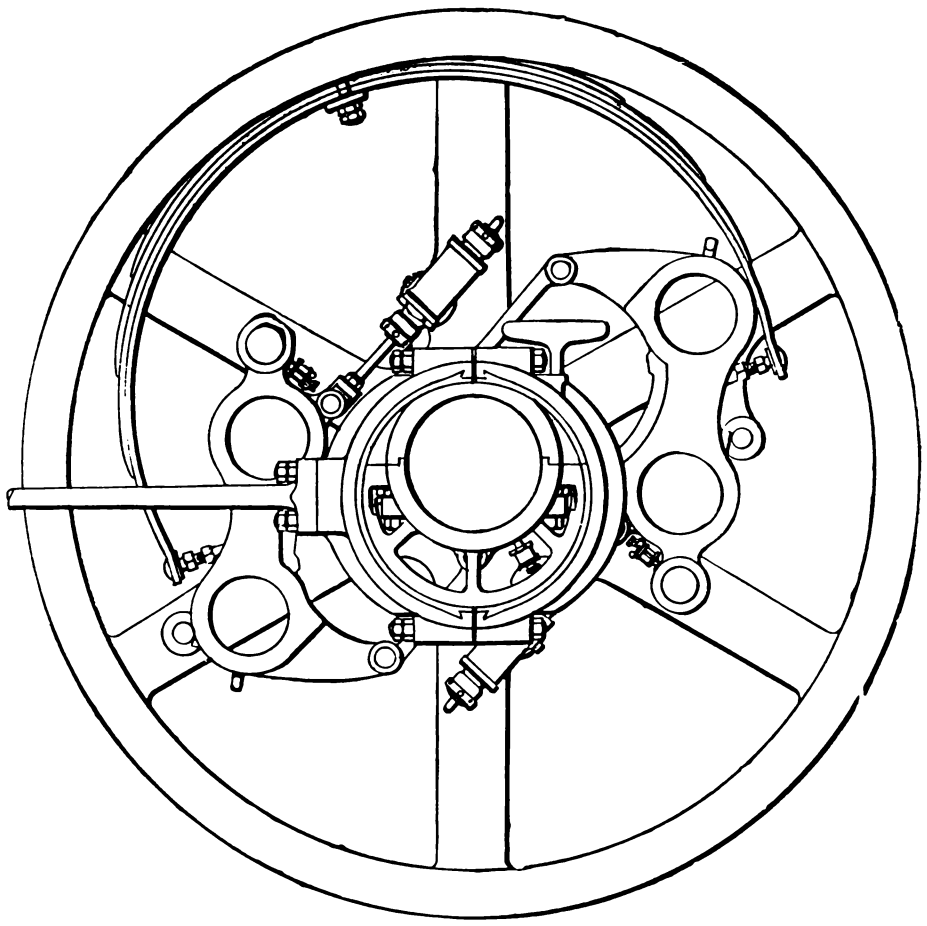

Fig. 3233.

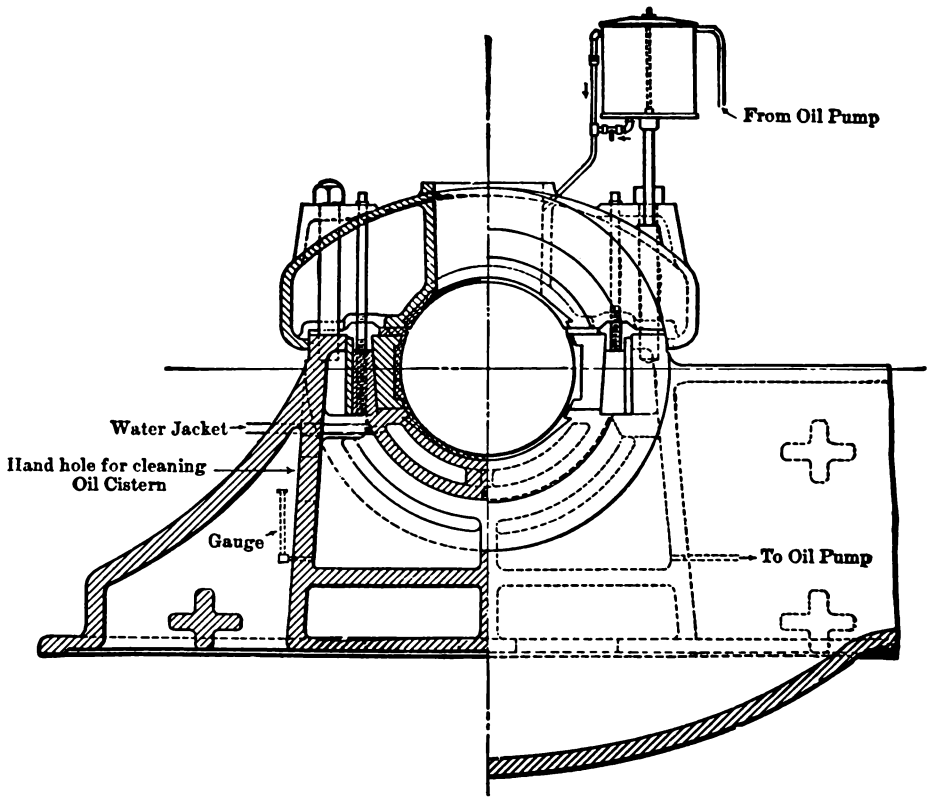

Fig. 3234.

upper surface of the low-pressure piston, the greater area of the latter causes it at all times to exert a downward force on the combined pistons. Whether or not this downward pressure results in a downward pressure on the crankpin depends upon the relation between the pressure of the steam enclosed in the controlling cylinder and that in the lower end of the low-pressure cylinder during the up stroke. By adjusting the quantity of steam enclosed in the controlling cylinder, the pressure in that cylinder at the end of the down stroke can be made to fall below that acting on the under side of the low-pressure piston, and the inertia of the reciprocating parts can thus be overcome without throwing a strain on the crankpin. The supply of steam to the controlling cylinder is effected through a very small by-pass port (not shown in our section), which is momentarily uncovered by the high-pressure piston at the top of its stroke. Practically, however, this port is found to be scarcely needed when the controlling cylinder has once been charged.

The action on the cylinder walls of the steam in this controlling cylinder is interesting. Being compressed on the up stroke, it heats the walls of the high-pressure cylinder to near the temperature of the steam which comes into contact with them during the down stroke, and thus produces, in this respect, over the whole cylinder, much the same effect as cushioning does to the piston and cylinder cover surfaces of an ordinary engine.

The manner in which the distribution of steam is effected will be readily understood from our section. There is, as will be seen, a long piston valve, tubular at its upper part and carrying three pistons. Steam is admitted between the upper and middle pistons, while the exhaust from the upper end of the high-pressure cylinder takes place over the top of the valve and down through the tubular portion. Admission to the lower end of the low-pressure cylinder takes place past the upper edge of the bottom piston of the valve, while the exhaust escapes below.

The valve is worked from the head of the connecting rod by the system of links and bell-crank lever shown, there being no eccentrics, and the spaces on the crankshaft between the cranks being thus left free for use as bearings.

It will be noticed that the crankshaft is not placed under the centre line of the cylinders, but some distance to the front of the engine. This causes the connecting rod to act at more favorable angles during the downward, or working, stroke, and relieves the pressures on the crosshead slide. The crankshaft, connecting rod, and crosshead guides are all enclosed in a chamber to which the exhaust steam has access, but between the top of this chamber and the bottom of the low-pressure cylinder a space is provided for access to the glands, as shown.

There are many mechanical details about this engine which are worthy of notice, but of these we can at present only speak briefly. Thus the crosshead pin has a wearing surface of cast-iron, it consisting of a split cast-iron shell encircling a steel pin having a coned head and a loose coned collar, by means of which the shell can be set up tight in the jaws of the crosshead, thus making an excellent job. The piston rod, it will be seen, is screwed into the crosshead, the part into which it is so screwed being split, and being capable of being tightened up on the rod by a couple of bolts. By this means the clearances in the cylinders can be adjusted for wear of the crosshead, connecting rod, or crankshaft bearings, without interfering with the latter. The governing is effected by a throttle valve, and in the case of the engines at the Empire of India Exhibition the variations of speed between full and no load is stated not to have exceeded 2 per cent. The connecting rod is of cast steel, with white metal bushes, and altogether the mechanical details of the engine are well worked out, both to secure efficiency and economy in manufacture.

A few particulars are given of a six hours' trial of the first engine of the type built, which was carried out at Colchester. In this case the engine was run with steam at 130 lb. pressure, and the indicator diagrams which we reproduce were obtained.

We are informed that the brake horse-power was found to amount to 88 per cent. of the indicated horse-power, and that the steam consumption was 22 lb. per indicated horse-power per hour. In this instance the cut-off was made late—as is necessary in practice when a throttling governor is used.

Fig. 3229 represents a 400 horse-power tandem compound engine, by Messrs. McIntosh and Seymour, of Auburn, New York.

The prominent features of these engines are the gridiron valves shown in Figs. 3230 and 3231, which operate crosswise of the cylinders, and are driven by a valve motion which is positive throughout.

The shaft governor shown in Figs. 3232 and 3233 regulates the speed, and consists of centrifugal weights which vary the point of cut-off by revolving the governor eccentric upon the shaft, and is designed so that the centrifugal force of each weight is very great, making the governor exceedingly powerful. These forces are opposed in a direct and frictionless manner by a plate spring through hardened steel pins resting in cups at each end, so that there is no friction or pressure due to these forces upon the pins upon which the weights turn. Dashpots are provided which give stability to the governor. The governor can be adjusted as to sensitiveness by changing the length of the pins between the centrifugal weights and spring, these pins being arranged to telescope for this purpose. The speed is regulated by changing the weight of bushings in the centrifugal weights.

The main bearings shown in Fig. 3234 are provided with cylindrical shells, which can be revolved around and taken out by simply jacking up the shaft to take the weight off the bearings. It is unnecessary to disturb other parts of the engine, and this feature is particularly valuable when the armature of a dynamo is mounted upon the engine shaft. These shells are made hollow for water circulation, which can be used in case the bearings should warm from dirt or other causes, to enable the engine to complete its run. These bearings are provided with a positive feed self-oiling device. Rings at the end of bearings throw off escaping oil into shields, from whence it is conveyed to a large settling reservoir beneath the bearing, provided with a gauge-glass for determining the height of oil. A small pump driven from the valve gear forces a continuous supply of oil from this lower reservoir to one situated above the bearing, from which it is fed by gravity on top of the bearing, keeping it constantly flooded with oil.

BREAKDOWNS OF STATIONARY STEAM ENGINES.*—Having been engaged during the last twenty years in the inspection and insurance of factory engines, and having seen something of the weaknesses and frailties leading to their breakdowns, it occurred to the author to offer to the Institution a short digest of his experience on a subject which is naturally of much practical interest to mechanical engineers. The present paper is primarily statistical; but the statements of fact are interspersed with suggestions as to their meaning, whenever the latter seems to have been ascertained. The statistics are derived from the last thousand breakdowns with which the writer had to deal previously to December 31, 1894. The number is no doubt small for forming the basis of a statistical inquiry; but the labor of searching more deeply into the records of the past forbade its being exceeded. These breakdowns have been analyzed and classified, in order to show which parts of the engines gave way first; and then the breakdowns of the different parts have been subdivided into groups, in order to show as far as possible the various causes to which the breakages of each of the several parts were due. In some instances, where the causes of damage are well defined, the writer has ventured to suggest the steps which should be taken to avoid them; in others, where they can less clearly be distinguished, it is left to the designers, makers, and users of steam engines to draw their own conclusions from the evidence. The paper is not intended as a treatise on steam-engine design; but may be likened rather to a mariner's chart, whereon are marked the rocks and shoals round which the wrecks lie thickest.

The results of the first analysis and classification are as follows:

* Paper read before the Institution of Mechanical Engineers, by Mr. Michael Longridge, of Manchester.

TABLE I.—PARTS WHICH APPEAR TO HAVE BROKEN FIRST, AND NUMBER OF CASES.

Valves and valve gear	213
Spurwheels	124
Air-pump motions	121
" " buckets and valves	88
Columns, entablatures, bedplates, and pedestals	86
Main shafts	49
Connecting rods	41
Cylinders and valve chests	35
Parallel motions	35
Governors and governor gear	28
Piston rods	27
Piston-rod crossheads	27
Pistons	22
McNaught and main links	22
Flywheels	19
Air pumps and condensers	13
Cranks	12
Gudgeons in beams	12
Crankpins	11
Beams	6
Slide bars	5
Ropes	3
Entire smash, no cause ascertained	1
Total number of breakdowns	1,000

It is unnecessary to discuss this list, as it represents merely the preliminary sorting of the breakdowns into classes suitable for closer examination. But before proceeding with this examination, it may be premised in the first place that the engine, as the word is used in the present paper, is limited by the crankshaft and the wheels upon it. The spur pinion upon what is called in Lancashire the "second-motion" shaft—that is, the pinion which is geared with the driving wheel upon the engine crankshaft—is not considered as a part of the engine. It is important to notice this distinction, because the breakages of spurwheels would have been much more numerous than stated in Table I. if the breakages of pinions had been included in the list. The risk attending the use of spur gearing, therefore, is not by any means to be estimated by the proportion 124 per 1,000. And, secondly, considering the number of accidents which occur through the failure of bolts, studs, split pins, and other fastenings, it might be expected that the fastenings generally would have been assigned to a special class; but the author came to the conclusion that it would suit the present purpose better to include the fastenings of each part with the part itself. Thus the bolts securing piston covers to pistons are classified with pistons, the gibs and cotters or bolts in connecting rods are considered as parts of the connecting rods, and so on.

Valves and Valve Gear.—The 213 breakages under this head may be subdivided as in Table II.

TABLE II.—VALVES AND VALVE GEAR.

Cause or Nature of Breakage, and Number of Case.

A. Valve spindles broken:		
Weakness of screw threads	34	
Sundry causes	12	
		46
B. Eccentric straps broken:		
Cause not ascertained	11	
Weakness	8	
Various causes	5	
		24
C. Rocking shafts and levers broken:		
Weakness, wear and tear, and causes not ascertained		23
D. Nuts, cotters, and pins, for securing valves to spindles, got loose		21
E. Eccentric rods broken:		
At screw threads	9	
Weakness	5	
Cause not ascertained	4	
		18
Carried forward		132
Brought forward		132
F. Slide valves broken		17
G. Eccentrics, nuts, cotters, or other fastenings of valve motions, got loose		13
H. Brass pieces, pinned to valves for increasing the lap, had come off		11
I. Trip motion of Corliss valve gear, broken:		
Dashpot rods, from vibration	4	
Other parts, cause not ascertained	3	
		7
J. Brackets for Corliss valve spindles		6
K. Eccentrics broken		5
L. Sundry breakdowns		22
Total breakdowns of valves and valve gear		213

The results of the subdivision of this class are rather disappointing. The miscellaneous character of the parts included in it, the uncertainty as to the stresses they had to bear, and the difficulty of ascertaining all the circumstances attending their breakage, are antagonistic both to brevity and distinctness. Still something may be learnt from it. As most of the breakages to which no cause could be assigned were really due rather to inability to endure the ordinary conditions of work than to the action of any abnormal stresses, it becomes evident that there is room for considerable improvement in the designing of valve gears, as regards both the strength and the arrangement and workmanship of the various fastenings.

Of the 46 valve spindles in group A, no fewer than 34 broke at screw threads. Most of these were of steel, and the appearance of the fractured surfaces nearly always showed that the fracture had commenced at the bottom of the thread and had extended gradually through the spindle. Doubtless, screw threads are necessary for purposes of adjustment; but if used, they should not be of the ordinary V-shape; gas threads are better, and round threads are best. Moreover, the joints in the valve gear should have adjustable brasses with large surfaces, to take up wear. And above all, cross-bending stresses, however slight, should be rendered impossible by the use of rigid and properly adjusted guides.

The causes of the 24 breakages of eccentric straps in group B were generally obscure. Some broke from heating; two through the valve motion getting jammed by foreign bodies; but most from weakness, particularly weakness of the lugs or bolts by which the two halves of the straps were joined together.

To weakness also were due most of the 23 breakages of rocking shafts and levers in group C. Or, if "weakness" be objected to in the absence of definite proof or calculation, "inability to bear the ordinary wear and tear of working" may be substituted.

Of the 21 breakdowns in group D, caused by fastenings working loose inside valve chests, 12 were traced to nuts coming off valve spindles or to corrosion of screw threads, and five to cotters working loose. Three were due to the breaking of buckles or bridles from weakness; and one to the excursions of a lump of iron, which had been bolted to the inside of a valve chest in order to reduce its capacity. Probably the best way of fastening a slide valve to its spindle is to thread it upon a plain tube a bare $\frac{1}{32}$ inch longer than itself; to thread this tube upon the spindle; and to secure it by nuts screwed hard up against each end of the tube. If the nuts be placed in recesses in the back of the valve, it becomes absolutely impossible for them to get off the spindle. It is also advisable to provide hand holes in the valve chests or in the valve-chest doors of large engines, in order to facilitate examination.

Of the 18 broken eccentric rods in group E, nine gave way at the screwed ends by which they were attached to the eccentric straps; exemplifying the fatal effect of cross-bending stresses upon V-threads. Nine broke in the body of the rod without ascertained cause.

The breakages of valves in group F were due, for the most part, to weakness. In five instances the faces of common slide valves were broken off from the exhaust hollow, probably through slamming against the cylinder face. In two the cast-iron jaws which received the T-headed ends of the valve spindles were broken off. Two valves having expansion plates on the back parted across the

nearer or front portway; the front piece, to which the spindle was fastened, became detached from the back part, in which the exhaust hollow was cast. The remaining eight cases were of a miscellaneous character.

The 11 breakdowns resulting from the breaking loose of strips of brass pinned to the edges of slide valves or ports need no explanation. The remedy is evident.

SPUR GEARING.—In this class, as already explained, only the driving wheels upon the engine main shafts were counted, the driven wheels or pinions being excluded. Had the latter been counted also, the breakages of spur gearing would have been nearly doubled. Moreover, there were many instances in which a wheel suffered a series of misfortunes, one following close upon another, and all arising from the same cause. In such instances the whole series of breakages is counted as only one breakdown; this also will make spur gearing appear less troublesome than it really is.

The 124 breakdowns in this class may be grouped as follows:

TABLE III.—SPUR GEARING.

Cause or Nature of Breakage, and Number of Cases.	
A. Backlash from belt or rope drums on second-motion shafts	23
B. Vibration due to high speed, heavy load, insufficient flywheel, and small pinions	19
C. Excessive stress due to teeth bearing on their corners and up to their points	16
D. High speed and irregular pitch	11
E. Bolts or pieces of broken teeth had got between wheels	10
F. No evidence as to causes	9
G. Fractures from internal stress	7
H. Insufficient or loose supports	6
I. Mortice wheels stripped	5
J. Putting new pinions to work with old wheels	4
K. Small size of pinions	5
L. Sundry causes and pure accident	9
Total breakdowns of spur gearing	124

In group A, the word "backlash" is used in the extended sense in which it is understood in Lancashire and Yorkshire, including not only backlash proper, but also break of contact between the working faces of the teeth of the two wheels when the driven wheel overruns the driver without actual backlash.

To place rope or belt drums of any considerable size upon the shafts driven by spur gearing is nearly always dangerous. Such drums are often put upon second-motion shafts, to replace existing gearing or to drive additional machinery. As they have generally to be got into existing buildings where there is little room to spare, there is often a great temptation to keep down their width, and to adopt a high circumferential speed.

This alone is sufficient to make the pinion on the second-motion shaft overrun the spurwheel on the main shaft of the engine: but when, in addition, the ropes or belts bounce, as they sometimes do if long, unless the engine has a powerful flywheel, the effect is sure to be disastrous to the gearing. In fact, it may be safely stated that heavy rope or belt driving should never be placed in sequence to spur gearing, except after special investigation by a competent engineer fully aware of the risk thereby incurred. The conditions necessary to success are, first and most important, a powerful flywheel on the engine crankshaft; secondly, a fairly uniform load, or a load which changes but slowly; thirdly, slow speed of ropes. It is true that, if the speed of the ropes be reduced, their number and weight must be increased, but it must be remembered that while the capacity of a rope to transmit power varies at moderate velocities approximately as the speed, its capacity for doing mischief, being measured by its energy, varies as the speed squared. Hence, although two ropes running at 2,000 feet per minute may be required to transmit the same power as one running at 4,000 feet, the two will have only half the power of the one in respect of damaging the gearing. The fact that 23 breakdowns have occurred among the limited number of engines which turn rope drives through gearing is strong evidence of the danger of the arrangement.

For want of a more suitable expression, the 19 breakdowns in group B have been ascribed to vibration. The cause is actually wear and tear of a particular kind of segmental spurwheel working under particular conditions, which may be understood from the following Table IV.

Except in two instances, where the teeth were cast upon the felloes or segments of the flywheel, the spur rims of all these wheels were made in segments, generally machine moulded, which were secured upon the outer circumference of the felloes by dovetails, keys, and bolts, somewhat as shown in Fig. 3235. At *a a a* the felloes and spur segments in most cases were turned and bored to fit each other. It will be seen that, except in the first instance, the power transmitted was 1,000 indicated horse-power or more; the speed at the pitch line was over 2,200 feet per minute; and the teeth in the pinion were few in number, of great breadth.

Spur Gearing

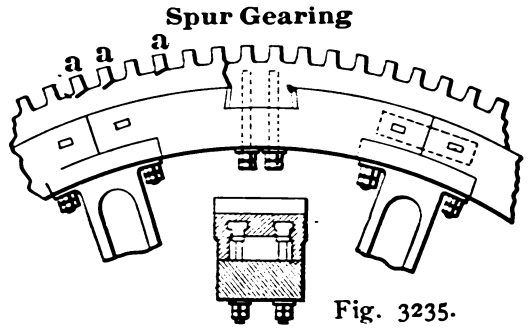

Fig. 3235.

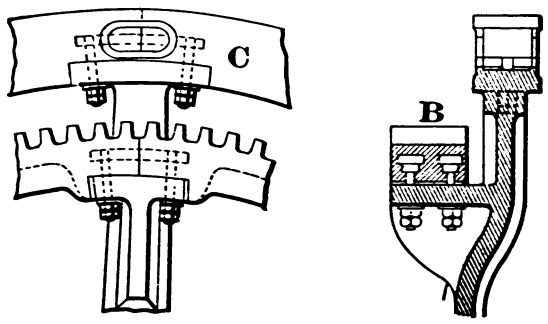

Fig. 3236.

TABLE IV.—SPUR GEARING.

Nineteen Segmental-rim Wheels Driving Pinions.

Power Transmitted.	Circumferential Speed. Feet per Minute.	Mean Pressure on Teeth.	Pitch of Teeth.	Breadth of Teeth.	Number of Teeth in Pinion.	Velocity Ratio, or Ratio of Revolutions of Pinion and Wheel.
i.h.p.		lb.	in.	in.		
700	2,280	10,100	4.5	14	42	3.8
1,000	2,356	14,000	5.4	17	41	3.4
1,000	2,334	14,200	5.0	18	43	3.2
1,000	2,261	14,600	5.5	18	41	3.3
1,000	2,241	14,700	5.6	18	46	2.5
1,000	2,208	14,950	5.0	18	47	3.2
1,000	2,200	15,000	5.62	18	46	3.4
1,080	2,318	15,400	5.25	16¾	43	3.0
1,100	2,401	15,000	5.0	17	47	2.9
1,100	2,406	15,100	5.5	18	50	2.3
1,100	2,410	15,050	5.0	17	47	2.9
1,130	2,242	16,600	5.8	18	43	3.1
1,150	2,320	16,300	5.75	18	46	3.1
1,150	2,320	16,350	5.75	18	47	3.0
1,190	2,323	16,900	5.7	18	47	3.0
1,200	2,209	17,900	5.0	19	52	3.0
1,200	2,418	16,400	4.75	19	52	3.2
1,220	2,209	18,200	5.0	18¾	49	3.2
1,360	2,325	19,300	4.5	18	71	2.8

Moreover, in many cases the pinion teeth were made of such a shape as to have a longer contact with the wheel teeth before and after passing the pitch point. All these wheels failed in one or two ways. Either the teeth were fractured, as shown at *a a a*, by excessive pressure on their ends, owing to the crankshafts shifting in their bearings or getting out of level; or else the bearing of the segments upon the felloes and against each other was ground

away by jar, and the segments broke across, generally between the end tooth and the end but one. It is not possible to describe in detail the causes of this destructive jar, or the symptons by which it may be detected; it is preferable to avoid entirely the use of wheels of this design under the conditions of large power and high velocity ratio.

If it be absolutely necessary to use gearing under these conditions, the spur segments should be carried upon the arms of the flywheel, as shown in Fig. 3236, at B and C, and not upon the felloes; and the latter should have as large a radius as can be got in between the crankshaft and the second-motion shaft, so that the power of the wheel may be as great as possible.

To place the spur rim, whose velocity should be low, on the outside of the flywheel, whose velocity should be high, is contrary to common sense. The number of teeth in the pinion should approach 60; and in order to obtain sufficient strength, with the fine pitch which the division of the circumference of the pinion into as many as 60 parts will frequently require, the spur rim and pinion should be of steel. Contact should commence about half a pitch before the pitch point, and should cease about a pitch beyond, so that the work may be done rather in going out of gear than in coming into gear. This means that the bearing of the teeth upon each other should extend but little on each side of the pitch line: in other words, that the teeth should be short. In no case should their height exceed half the pitch. In some cases even shorter teeth may be desirable, in order to gain strength and to diminish wear; for when wheels differ much in diameter, the sliding of the teeth upon each other increases rapidly as their line of contact recedes from the pitch line.

Short teeth may be narrower than longer teeth, and thus will be less likely to suffer from concentration of the pressure on their ends. It is also a good plan in moulding the teeth to level the wearing faces of the teeth of both wheel and pinion at the ends which are at the bottom of the mould; so that, when the wheels are geared together, with the bottom face of one wheel opposite the top face of the other, the bevelled faces of the wheel teeth will be at the right or left hand end, and those of the pinion teeth at the left or right hand end, thus preventing concentration of pressure upon the extreme ends of either. This is a better plan than bevelling the ends of the teeth. When the number of teeth in the pinion has to be reduced to 40 or less, double helical gearing should be used; but in this case, the length of the second-motion shaft which carries the pinion should be short; and the shaft should have a claw coupling at each end, in order to allow the pinion to move from side to side, so as to distribute the load equally upon each half of the double tooth.

Finally, the pedestals for the second-motion shaft, and the fixings which carry them, must be massive and rigid. It is well to use wood keys behind these pedestals, in order to allow the wheels to separate, should anything get between them.

The 16 breakdowns in group C are attributed to causes similar to the last; but with this difference, that the more serious evils of heavy load and high velocity ratio were not both of them present. By keeping the shafts level, and the points and roots of the teeth chipped, most of these breakdowns might have been prevented. Many steam users are quite satisfied to see a pair of wheels with teeth polished from point to root, considering they have reached perfection. This is all very well, so long as the crankshaft can be held quite steady; but let an accident occur, such as a hot neck or anything which will displace the wheels by ever so little, and the result is sure to be disastrous.

In group D, containing breakages from high speed and irregular pitch, 10 out of the 11 wheels had spur segments moulded from patterns, instead of by machinery; and in 3 of the 10 the teeth were cast upon the felloes, and were twisted and drawn, as they generally are when cast in this way, by the contraction of the mass of metal of which they form a part. In every instance the speed was high, and in several cases there was more or less backlash or overrunning.

Out of the 10 breakdowns in group E, caused by bolts or broken teeth getting between the wheels, 6 were caused by bolts used for fastening spur segments. In each instance the bolt passed through the segment between the teeth, its head being countersunk; and it was secured by a nut on the inner side of the felloe or bracket to which the segment was attached. The bolts broke at the screw threads, and the shanks, having nothing to hold them back, were driven out by centrifugal force. Few wheels have segments fastened in this way, but among the few were these 6 breakdowns.

Of the 7 wheels in group G which broke from internal stress, 6 were cast whole, of the following diameters: 6 feet; 6 feet 10 inches; 8 feet 2 inches; 9 feet 8 inches; 10 feet; and 10 feet 11 inches; and one of 10 feet 9 inches diameter was cast in halves. When large wheels are cast whole, the bosses should be split at least between each pair of arms, slotted out, and packed with planed wrought-iron plates, the whole being afterwards secured by strong wrought-iron hoops shrunk on each end of the boss. A key should be fitted under each segment of the boss.

In the 5 instances in group K, in which the breakages have been attributed to the small size of the pinions, the numbers of teeth in the pinions were 29, 32, 34, 34, and 36. It is, of course, possible to make wheels mathematically correct with less than half these numbers of teeth; but where one of the shafts is movable, like the crankshaft of an engine, pinions with so few teeth cannot be used to transmit much power, except at speeds unsuitable for mill work. Such wheels should have double helical teeth, as already described.

AIR-PUMP MOTIONS.—The 121 breakdowns of these parts may be subdivided as in Table V. subjoined.

The breakages of air-pump motions are almost as difficult to treat as those of valve gear. There is the same uncertainty as to stresses, and the same absence of detailed information as to the dimensions of the broken parts and as to the circumstances under which the breakdowns occurred. The consequence is, that nearly half the cases have been included in group A under the heading, "weakness, wear and tear, or neglect." At first sight it might appear that there should be no difficulty in distinguishing between the effects of these three causes; in fact, it is otherwise.

TABLE V.—AIR-PUMP MOTIONS.

Cause or Nature of Breakage, and Number of Cases.		
A. Weakness, wear and tear, or neglect		
Air-pump rod crossheads broken . .	20	
Levers, principally bellcrank, broken . .	17	
Crankshafts, cranks, rocking shafts or eccentrics, broken	11	
Slides or slidebars broken	3—	51
B. Air-pump rods broken:		
At cotter holes by driving cotters, or from weakness at other parts	15	
From various causes	6—	21
C. Fastenings getting loose:		
Cotters coming out of top ends of bucket rods	7	
Cotters coming out of other parts of motions .	4	
Bolts breaking or getting loose . . .	7—	18
D. Breakages of eye bolts or rod ends at bottom of trunks from wear		14
E. Fastenings at bottom ends of bucket rods getting loose or breaking		12
F. Sundry breakages		5
Total breakdowns of air-pump motions .		121

The load on an air-pump bucket when the head valve opens may be anything from 10 lb. to 20 lb. per square inch; for the first a motion may be sufficient; for the second, far too weak. Again, with the arrangement of links, bellcrank levers, and side rods, commonly adopted for horizontal engines—and 46 out of the 51 motions in group A were of this kind—the distribution of the load upon the different parts may be materially affected by improper adjustment of brasses and cotters; yet all evidence of the fact may be destroyed on the occurrence of a breakdown. As regards the crossheads, the author has sufficient data to say that they were generally too weak.

As regards the other parts mentioned in group A, there is not enough information to decide which of the three causes—weak-

ness, wear and tear, or neglect—was most destructive. All that can be said about them is that they afford strong evidence that many air-pump motions are unable to correspond with their environment. They need more attention than they commonly receive, greater strength, larger bearings, cleaner and lighter situations. One reason they are so often neglected is that they often cannot be approached with safety while at work, and only at the expense of a suit of clothes while standing. For factory engines, where weight is of little consequence, the parts should be calculated to bear a load of 20 lb. per square inch upon the bucket with a stress of, say, 5,000 lb. per square inch; and the wide crossheads with side rods far apart, so common in horizontal engines, should, if possible, be done away with.

The second group, B, is important, because cotters are here met with for the first time. It contains 15 instances of rods broken at the cotter hole. Cotters are often treated with slight consideration. This is unwise, because a little inattention will change a cotter from a useful servant into an effective instrument of destruction.

For instance, if a cotter has not exactly the same taper as the cotter hole, the stress will be concentrated on the metal at the edge of the cotter hole, where the material runs up to a sharp edge. Again, if the cotter be not deep enough to be absolutely free from any tendency to bend, the same concentration of stress upon the extreme edges of the cross-section will occur. And even if the cotter be absolutely rigid and accurately fitted, the stress at the edges of the cotter hole may be much enhanced if the rod be permitted to bend in the plane in which the cotter is driven. A cotter should, therefore, be deep enough to be rigid, and should be accurately fitted. The cotter hole should be formed with all its edges well rounded off, so as to increase the quantity of metal available for bearing the maximum stress. And, lastly, the cotter should be driven in the plane at right angles to that in which bending of the rod is likely to occur, so that the cotter hole, being in the neutral position, may not suffer deformation.

Cotters occur also in the third group C; and it is worth noting that 6 of the first 7 breakdowns in this group were caused by cotters coming out of the top ends of air-pump bucket rods of beam engines.

The fourth group, D, is more satisfactory to deal with, as it teaches a definite lesson. Among the engines which have furnished the material for this paper there were certainly not many more than 14 which had air-pump buckets driven by trunk motions, possibly not even so many as 14; so that the figure in Table V. shows that, if the trunk motions insured did not all of them break down, at least a large percentage of them did, and some of them more than once. The cause was the same in every instance—accumulation of dirt in the bottom of the trunk, wear of the pin connecting the rod to the eye bolt, or of the eyes in which the pin worked, heavy knocking, and breakage. The lesson taught is that trunk motions should not be adopted, if there be room for any other arrangement.

The fifth group, E, is also satisfactory, as showing clearly what should not be done in the matter of fastening air-pump buckets upon their rods. In all the 12 instances the buckets were slipped upon the end of the rods, and secured against a cone or collar by nuts or cotters or both on the under side. Thus the fastenings could not be examined without drawing the buckets, and were neglected till they got loose or broke, or disappeard by corrosion, with the result that the buckets dropped off the rods, and were pounded to pieces by the rod ends. The collar or the big end of the cone should be at the extreme end of the rod, and the bucket should be secured against it by a cotter, or preferably by a nut, on the upper side; the same cotter or nut may also secure the guard if the bucket have a single valve. Or if plain cast-iron buckets be used, they may be warmed and screwed firmly upon the ends of the rods, which may then be riveted over.

CHAPTER XXXIV.—BOILERS FOR STATIONARY STEAM ENGINES.

THE boiler for a steam engine requires the most careful usage and inspection, in the first case because a good boiler may be destroyed very rapidly by careless usage, and in the second case because the durability of a boiler depends to a great extent upon matters that are beyond ordinary control, and that in many cases do not make themselves known except in their results, which can only be discovered by careful and intelligent inspection. All that the working engineer is called upon to do is, to use the boiler properly, keep it clean, and examine it at such intervals as the nature of the conditions under which it is used may render necessary.

The periods at which a boiler should be cleaned and inspected depend upon the quality of the water, whether the feed water is purified or not, and to a certain extent upon the design of the boiler; hence these periods are variable under different circumstances.

The horse power of a boiler is estimated in various ways, and there is no uniform practice in this respect. Some makers estimate a boiler to have a horse power for every fifteen square feet of heating surface it possesses, while others allow but 12 square feet.

The heating surface of a boiler of any kind is the surface that is exposed to the action of the fire on one side, and has water on the other; hence the surface of the steam space is not reckoned as heating surface, even though it may be exposed to the action of the heat. The effectiveness of the heating surface of a boiler obviously, however, depends upon the efficiency of the fire, and this depends upon the amount of draught, hence the estimation of horse power from the amount of its heating surface, while affording to a certain extent a standard of measurement or comparison while the boiler is not in use, has no definite value when the boiler is erected and at work.

Thus whatever amount of steam a boiler may produce under a poor or moderate draught, it will obviously produce more under an increased draught; hence the efficiency of the same boiler depends to a certain extent upon the draught, or in other words upon the quantity of fuel that can be consumed upon its fire bars.

The amount of water required in steam boilers varies from 16 lbs. to 40 lbs., per horse power per hour, and it has been proposed to compute the horse power of boilers from the water evaporation, taking as a standard 30 lbs. of feed water at a temperature of 70 degrees, evaporated into steam at a temperature of 212 degrees, at which temperature the steam is assumed to equal the pressure of the atmosphere.

* "The strength of the shell of a cylindrical boiler to resist a pressure within it, is inversely proportional to its diameter and directly, to the thickness of the plate of which it is formed.

"For instance, take three cylindrical boilers each made of ½ inch plate, the first one 2 feet 6 inches in diameter; the second twice that, or 5 feet in diameter; and the third twice that again, or 10 feet in diameter; and if the 2 foot 6 inch boiler is fit for a safe working pressure of 180 lbs. per square inch, then the 5 foot boiler will be fit for exactly one-half that amount, or 90 lbs. per square inch; and the ten foot boiler will be fit for half the working pressure of the five foot boiler, hence we have:

Diameter of boiler shell.	Thickness of plate.	Relative working pressure.
2 feet 6 inches.	½ inch.	180 lbs. per square inch.
5 "	" "	90 " " " "
10 "	" "	45 " " " "

"The reverse applies to the thickness of the plate. For instance, if we take two cylindrical boiler shells, each 5 feet in diameter, the first one made of plate ½ inch thick, and the second twice that, or 1 inch thick, and if the first is equal to a safe working pressure of 90 lbs. per square inch, then the second is equal to a safe working pressure of twice as much, or 180 lbs. per square inch, providing, of course, that the riveted seams are of equal strength in each case, and that both boilers are allowed the same margin for safety; hence we have:

Diameter of boiler.	Thickness of shell.	Safe working pressure.
5 feet.	½ inch.	90 lbs. per square inch.
5 "	1 "	180 " " " "

"These principles (namely, that the strength of a boiler is, all other things or elements being equal, inversely proportional to its diameter, and directly proportional to its thickness) afford us a groundwork upon which we may lay down rules for determining by calculation the strength of the solid part* of any boiler shell, and the bases of these calculations are as follows:

"If the shell plate of a cylindrical boiler is ½ inch thick, there is

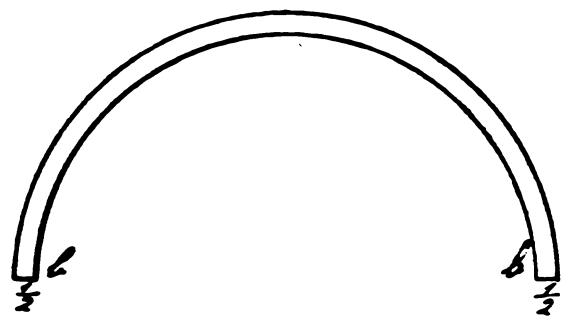

Fig. 3237.

one inch section of metal to be broken before the boiler can be divided into two pieces, that is to say there is ½ inch on each side

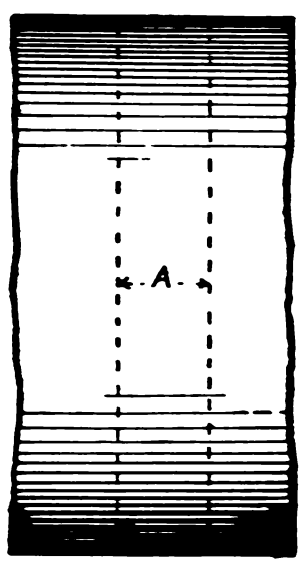

Fig. 3238.

of the shell, as shown in Fig. 3237. and the two together will make 1 inch. If we take a ring an inch broad, as, say, at A in Fig. 3238 we shall obviously have a section of 1 square inch of metal to break before the ring can be broken into two pieces.

* From "*Steam Boilers.*"

* In the case of the riveted joints or seams other considerations come in, as will be shown hereafter.

"The next consideration is, what is the average strength of a plate of boiler iron? Now suppose we have a strip of boiler iron 2 inches wide and ½ inch thick, or, what is the same thing, a bar of boiler iron 1 inch square, and that we lay it horizontally and pull its ends apart until it breaks, how many lbs. will it bear before breaking? Now for our present purpose we may assume this to be 47,040 lbs., and if this number of lbs. be divided by the diameter of the boiler in inches, it will give the bursting pressure in lbs. for any square inch in the ring, or any other square inch in the cylindrical shell of the boiler.

"The reason for dividing by the diameter of the boiler is as follows:

"Of course the steam pressure presses equally on all parts of the interior surface of the shell, and may be taken as radiating from the centre of the boiler, as in Fig. 3239, which represents an end

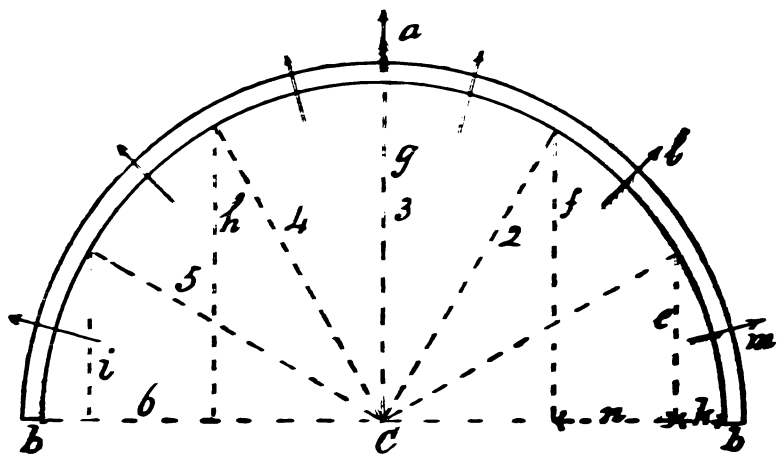

Fig. 3239.

view of a strip an inch wide, of one half of a boiler. Now leaving the riveted seam out of the question, and supposing the shell to be truly cylindrical, and the metal to be of equal quality throughout, it will take just as much pressure to burst the shell apart in one direction as it will in another, hence we may suppose that the boiler is to be burst in the direction of arrow *a*, and it is the section of metal at *b b* that is resisting rupture in that direction.

"Now suppose we divide the surface against which the steam presses into six divisions, by lines radiating from the centre C, and to find the amount of area acting on each division to burst the shell in the direction of arrow *a*, we drop perpendicular lines, as line *e*, from the lines of division to the line *b b*, and the length of the line divided off (by the perpendicular) on the diameter represents the effectiveness of the area of that division to burst the boiler in the direction of arrow *a*; thus for that part of the boiler surface situate in the first division, or from *b* to line *e*, the area acting to burst the boiler in the direction of *a* is represented by the length of the line *k*, while the general direction of the pressure on this part of the shell is represented by arrow *m*.

"Similarly, for that part of the shell situate between vertical line *e* and vertical line *f*, the general direction of the steam pressure is denoted by the arrow *l*, while the proportion of this part that is acting to sever the boiler in the direction of *a* is represented by the distance *n*, or from the line *e* to line *f* measured on the line *b b*.

"By carrying out this process we shall perceive that, although the pressure acts upon the whole circumference, yet its effectiveness in bursting the boiler in any one direction is equal to the boiler diameter. Thus in Fig. 3240, the pressure acting in the direction of the arrows *a* (and to burst the boiler apart at *b b*) is represented by the diametral line *b b*, while the pressure actually exerted upon the whole boiler shell is represented by the circumference of the boiler.

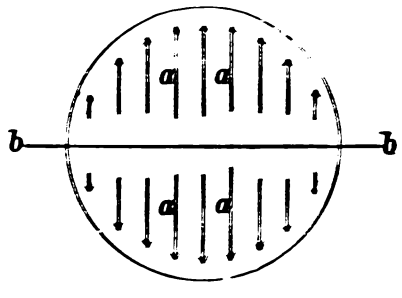

Fig. 3240.

"To proceed, then, it will now be clear that the ultimate strength of the boiler material, multiplied by twice the thickness of the boiler shell plate in inches or decimal parts of an inch, and this sum divided by the internal diameter of the boiler, in inches, gives the pressure (in lbs. per square inch) at which the boiler shell will burst."

We have here only considered the strength of the solid plate of the shell, and may now consider the strength of the riveted joints, because, as the boiler cannot be any stronger as a whole than its weakest part is, and as the riveted joints are the weakest parts of a cylindrical boiler,* therefore the strength of the riveted joint determines the strength of the boiler.

†"The strains to which a riveted joint is subjected are as follows: That acting to shear the rivet across its diameter is called the *shearing* strain. But the same strain acts to tear the plate apart; hence, when spoken of with reference to the action on the plate, it is called the *tearing* strain.

"The same strain also acts to crush and rupture the plate between the rivet hole and the edge of the plate, and in this connection it is called the *crushing* strain.

"Thus, Fig. 3241 represents a single riveted lap joint, in which

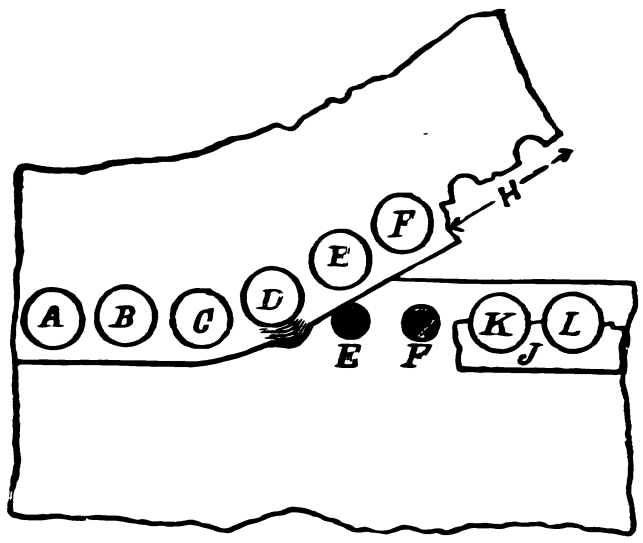

Fig. 3241.

the joint at rivets A, B, and C is intact, the metal outside of D has crushed, the rivets E, F have sheared, and the plate has torn at H, leaving a piece J on the rivets K L.

"It is obvious that, since it is the same strain that has caused these different kinds of rupture, the joint has, at each location, simply given way where it was the weakest.

"If a riveted joint was to give way by tearing only, the indication would be that the proportion of strength was greatest in the rivets, which might occur from the plate being of inferior metal to the rivets, or from the rivets being too closely spaced. If the rivets were to shear and the plate remain intact, it would indicate insufficient strength in the rivets, which might occur from faulty material in the rivets, from smallness of rivet diameter, or from the rivets being too widely spaced.

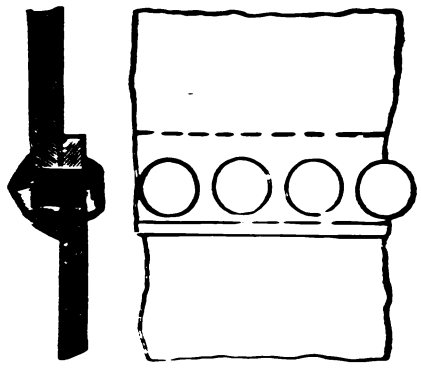

Fig. 3242.

"The object then, in designing a riveted joint is to have its re-

* It may be here noted that the riveted joint of a flat plate is stronger than the flat surface of the plate, because at the joint the plate is doubled, or one plate overlaps the other.

† From "*Steam Boilers.*"

sistance to tearing and shearing proportionately equal, whatever form of joint be employed."

The English Board of Trade recommends that the rivet section should always be in excess of the plate section, whereas, in ordinary American practice, for stationary engine boilers, the plate and rivet percentages are made equal.

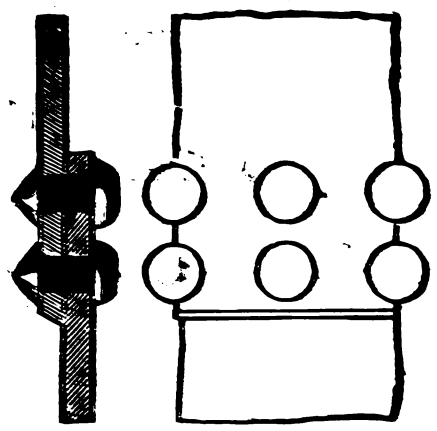

Fig. 3243.

The forms of riveted joints employed in boiler work are as follows:

Fig. 3242 represents a single riveted lap joint. Fig. 3243 represents a double riveted lap joint, chain riveted; and Fig. 3244, a double riveted lap joint, with the rivets arranged zigzag.

Fig. 3245 represents a single and Fig. 3246 a double riveted

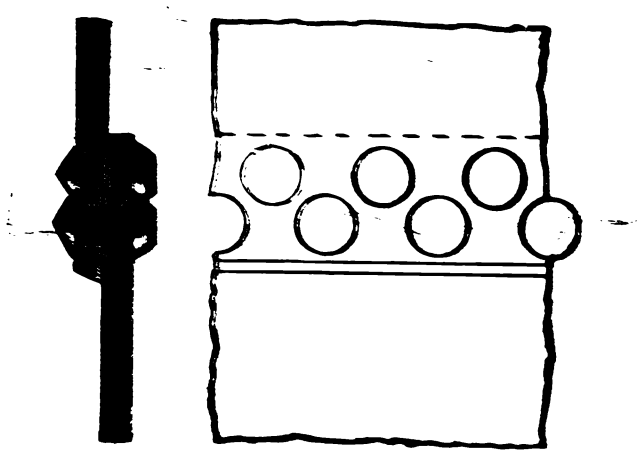

Fig. 3244.

butt joint, so called because the ends of the boiler plate abut together. The plates on each side of joint are called butt straps.

The advantages of the butt joint are, first, that the boiler shell is kept more truly cylindrical, and the joint is not liable to bend as it does in the lap joints, in the attempt of the boiler (when under pressure) to assume the form of a true circle, and second that the

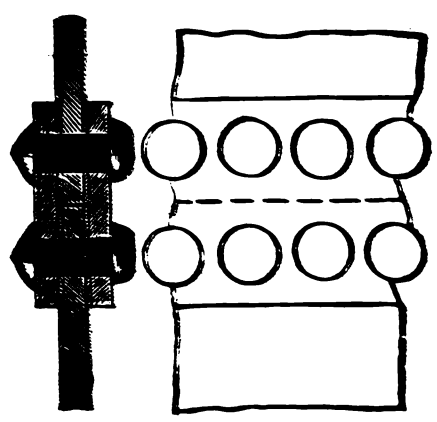

Fig. 3245.

rivets are placed in double shear. That is to say, if in a lap joint the rivet was to shear between the plates, the joint would come apart, whereas, in a butt joint, the rivet must shear on each side of the plate, and therefore in two places.

Fig. 3247 represents a form of joint much used in locomotive practice in the United States. It is a lap joint, with a covering plate on the inside of the joint; rivets E and F are in single and rivets D in double shear.

*"When we have to deal with comparatively thin boiler plates,

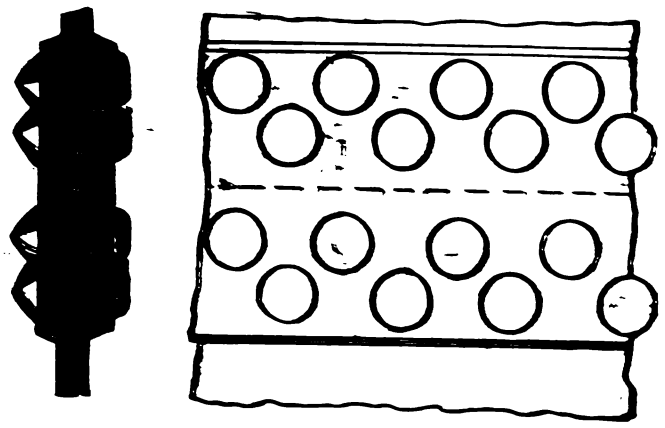

Fig. 3246.

there is no difficulty in obtaining a sufficiently high percentage of strength in the joints, by using the ordinary double riveted joint, but when we have to deal with thick plates, as in the case of large marine boilers, as 1 inch or upwards, a more costly form of joint

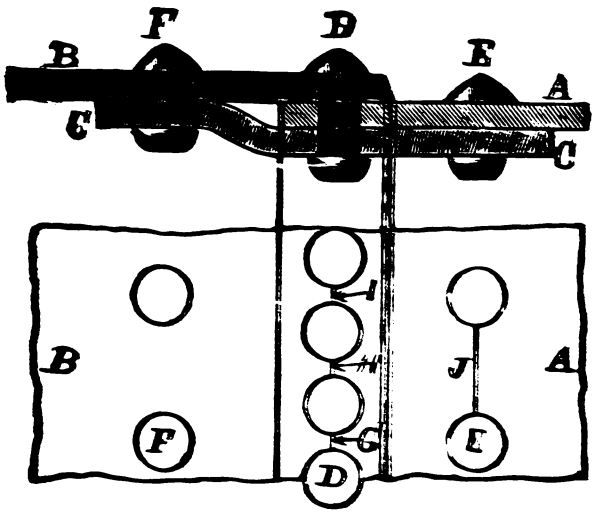

Fig. 3247.

must be employed, in order to obtain the required percentage of strength at the joint; hence the ordinary double riveted joint is replaced by various other forms as follows:

"First, a triple zigzag riveted lap joint, such as shown in Fig.

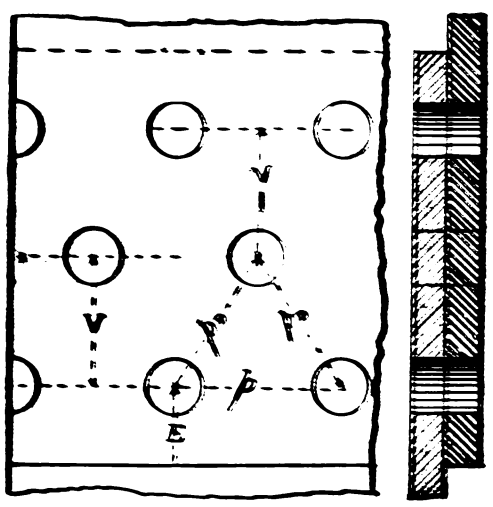

Fig. 3248.

3248, or a chain riveted joint as in Fig. 3249, in both of which the third row of rivets enables the rivet pitch to be increased, thus increasing the plate percentage, while the third row of rivets also increases the rivet percentage.

"Second, by employing butt joints with butt straps, either double or treble riveted.

* From "*Steam Boilers.*"

"A double riveted butt joint with double straps is shown in Fig. 3250, and a treble with double straps in Figs. 3251 and 3252.

"Third. By various arrangements of the rivets in conjunction

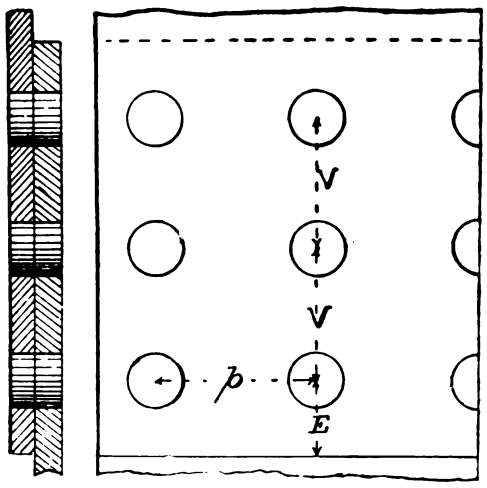

Fig. 3249.

with butt joints and double straps, with which it is not necessary, at this point, to deal.

"One of the great advantages obtained by the use of the double strap is that of bringing the rivet into double shear (or in other words, the rivet must shear on each side of the plate, or in two places, instead of between the plates only, before the joint can give way by shearing), and thus obtaining an increased calculated

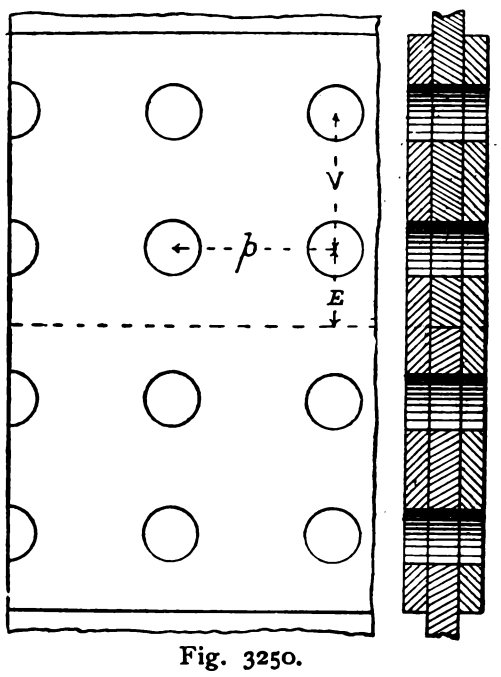

Fig. 3250.

strength of 1¾ times the ordinary or single shear, the rule being to find the rivet strength in the ordinary way (as before explained), and then multiply the result by 1.75.

"The Board of Trade rules for spacing the rivets of these joints are as follows:

"Dimension E is the distance from the edge of the plate to the centre of the rivet hole. Dimension V is the distance between the rows of rivets, dimension *p* is the pitch of the rivets, which is always measured from centre to centre of the rivets, and dimension *pd* is the diagonal pitch of the rivets.

"The rule for finding dimension E, whether the plates and rivets are either of steel or iron, is as follows:

"Multiply the diameter of the rivet by 3 and divide by 2, the formula being as follows:

$$\frac{3 \times d}{2} = E.$$

"To find the distance V between the rows of rivets in chain riveted joints. This distance must not be less than twice the rivet diameter, and a more desirable rule is four times the rivet diameter plus 1 divided by 2, thus:

$$\frac{4d + 1}{2} = V.$$

"To find the distance between the rows of zigzag riveted joints:

$$\frac{\sqrt{(11p + 4d) \times (p + 4d)}}{10} = V,$$

that is, multiply 11 times the pitch plus 4 times the rivet diameter, by the pitch plus 4 times the rivet diameter, then extract the square root and divide by 10.

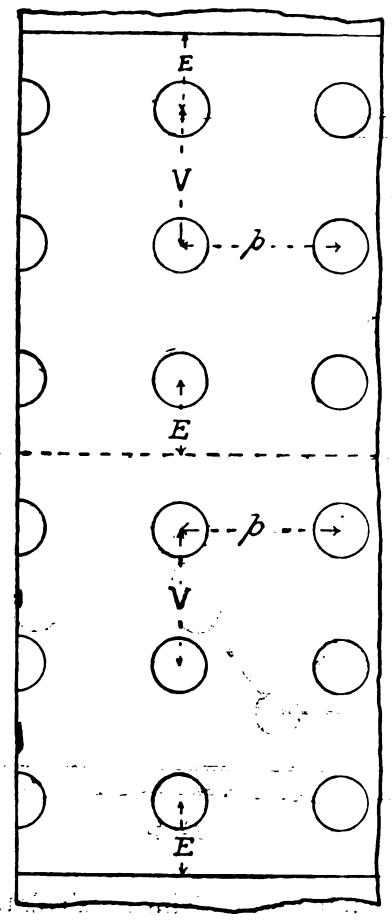

Fig. 3251.

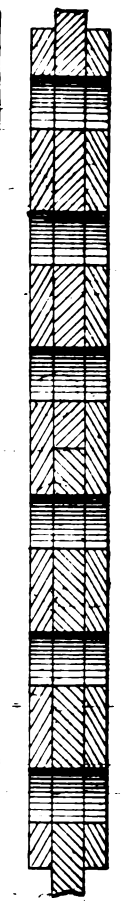

Fig. 3252.

To find diagonal pitch *pd*, multiply the pitch *p* by 6, then add 4 and divide by 10, thus:

$$\frac{6p + 4}{10} = pd.$$

Fig. 3253 represents a form of high percentage joint, used upon marine boilers of 10 to 14 feet diameter, and carrying from 100

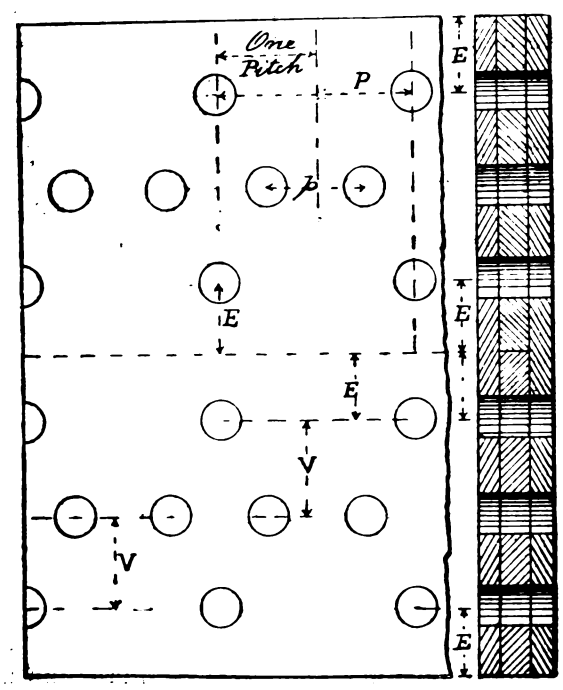

Fig. 3253.

to 190 lbs. pressure of steam. The rivets are what are termed unevenly pitched, or, that is to say, on each side of the joint, there

are three rows of rivets, of which the inner and outer rows are wider pitched than the middle row.

* "The advantage gained by this spacing is that the shear of the outer row of rivets is added to the plate section at the narrow pitch, that is to say, if the plate section broke through the line of rivet holes at the narrow pitch, it has yet to shear the outer row of rivets before the plate can separate."

Fig. 3254 represents a second example of joint with rivets unevenly pitched, this form finding much favor in recent practice. The four inner rows of rivets are spaced at narrow pitch and the two outer rows are wide pitched.

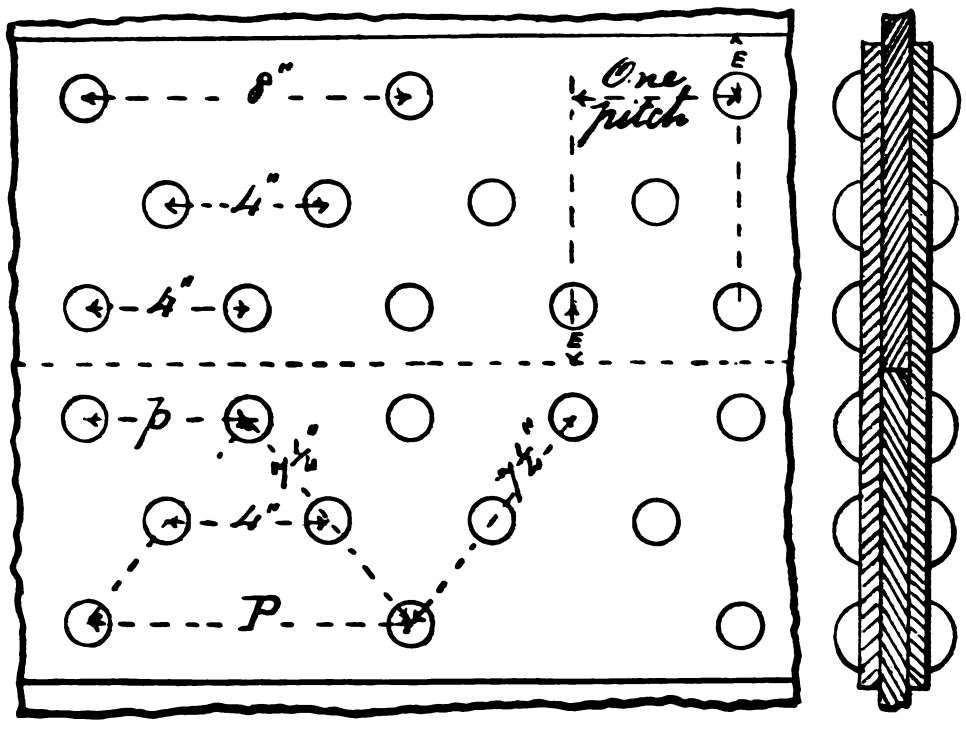

Fig 3254.

† "The strength percentage of this joint is calculated from three points of view, as follows:

"First. The plate section at the wide pitched rivets.

"Second. The rivet section in one pitch.

"Third. The plate section at the narrow pitch plus half the double shear of the outer or wide pitched rivet."

The steam pressures generally employed in the boilers of stationary engines range from about 60 to 100 lbs. per square inch, and as a result of these comparatively low pressures less perfect forms of construction are employed than would be permissible if higher pressures were used.

The strength of the shell plate of boilers of small diameter is always largely in excess of the requirements, and as a result the strength of the joints may bear a very low percentage to that of the solid plate, and yet give a sufficient factor of safety for the working pressure.

Take, for example, a boiler shell of 36 inches internal diameter with a shell plate ¼ inch thick, and allowing the strength of the material to be 48,000 lbs. per inch of section, and with a factor of safety of 4, the working pressure will be 166 lbs. per square inch, thus:

$$\frac{\overset{\text{Strength of the material}}{48000} \times \overset{\text{Plate thickness} \times \text{by } 2}{(.25 \times 2)}}{\underset{\text{Diameter of boiler.}}{36}} = 666\tfrac{2}{3} \text{ lbs.} = \text{bursting pressure.}$$

By dividing this 666 by the factor of safety 4 we get 166⅔ lbs. as the working pressure of the shell plate independent of the riveted joint. Usually, however, such a boiler would not be used for a pressure above about 60 lbs. per inch, and this leaves a wide margin for the reduction of strength caused by the riveted joints.

Suppose, for example, that a single riveted lap joint is used, and the strength of this joint is but 50 per cent. of that of the solid plate, and we have as follows:

$$\frac{\overset{\text{Strength of material.}}{48000} \times \overset{\text{\% strength of riveted joint.}}{.50} \times \overset{\text{Twice the plate thickness.}}{(.25 \times 2)}}{\underset{\text{Internal diam. of boiler.}}{36} \times \underset{\text{Factor of safety.}}{4}} = 83\tfrac{1}{3} \text{ lbs.} = \text{W.P.}$$

Here then we find that the working pressure of the solid plate is double that of the riveted joint, and that the working pressure of the boiler is 83 lbs. per square inch, notwithstanding that the strength of the riveted joints is but 50 per cent. of that of the solid plate. Such a boiler would not, however, be used for a pressure of over 60 lbs. per square inch.

If the above-named boiler was double riveted so as to bring the percentage of joint strength up to say 70 per cent. of that of the solid plate, its working pressure would be 116 lbs. per square inch, thus:

$$\frac{\overset{\text{Strength of material.}}{48000} \times \overset{\text{\% strength of riveted joint.}}{.70} + \overset{\text{Twice plate thickness.}}{(.25 \times 2)}}{\underset{\text{Internal diam. of boiler.}}{36} \times \underset{\text{Factor of safety.}}{4}} = 116\tfrac{2}{3} \text{ lbs.} = \text{W.P.}$$

But in practice such a boiler would not be used for pressures above about 75 lbs. per square inch, hence the shell plate thickness is still largely in excess of the requirements, and it may be remarked that plates less than ¼ inch thick are not used on account of the difficulty of caulking them and keeping them steam tight.

On account therefore of the excessive strength of the shell plates in boilers of small diameter, butt straps are rarely used in stationary boilers, while punching the rivet holes and other inferior modes of construction are employed.

We may now consider the circumferential seams of the boilers for stationary engines, such boilers sometimes being of great length in proportion to the diameter.

In proportion as the length of a boiler (in proportion to its diameter) is increased, the construction of the circumferential or transverse seams, as they are sometimes called, becomes of more importance.

The strength of the circumferential seams is so much greater than that of the longitudinal seams that it is often taken for granted that they are sufficiently strong if made with a lap joint and single riveted, but that such is not always the case will be shown presently.

In Fig. 3255 is represented a boiler composed of three strakes (*i. e.*, three rings or sections), and it is clear that as the thickness of

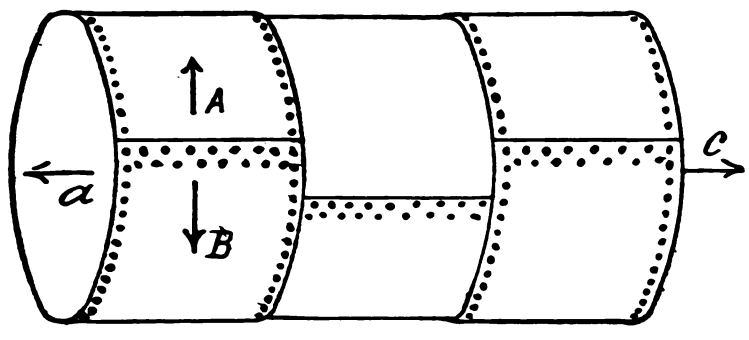

Fig. 3255.

the shell is doubled at the circumferential seams where the ends of the middle strake pass within the end strakes, therefore the strength of the lapped joint of the shell to resist rupture in a transverse direction, as denoted by the arrows A, B, is actually increased by reason of the lap of the riveted joint. But suppose this boiler to be supported at the ends only, and the weight of the shell and of the water within it will be in a direction to cause the middle of the boiler to sag down, and therefore places a shearing strain on the rivets of the circumferential seams.

* From "*Steam Boilers.*"

† From "*Steam Boilers.*"

Moreover, the temperature of the outside of the boiler cannot be made or maintained uniform, because the fire passing beneath the bottom of the boiler first will keep it hotter, causing it to expand more, and this expansion acts to shear the rivets of the circumferential seams. In proportion as the heat of the fire varies in intensity, the amount of the expansion will vary, and the consequence is that the circumferential seams may get leaky or the joint may work, especially in boilers that are long in proportion to their diameters. It is clear, therefore, that for the very best construction at least a double riveted circumferential joint should be employed.

Leaving these considerations out of the question, however, we may find the amount of stress on the circumferential seams by multiplying the area of the end of the boiler by the working pressure, and dividing by the cross-sectional area of all the rivets in one circumferential seam.

Suppose, for example, that the diameter of the boiler is 36 inches, the working pressure 60 lbs. per square inch, and that there are in each circumferential seam 50 rivets, each $\frac{3}{4}$ inch in diameter, and we proceed as follows:

The area of a circle 36 inches in diameter = 1017.87 square inches.
The area of a rivet $\frac{3}{4}$ inches in diameter = .4417 square inch.

Then

$$\frac{\underset{\text{Area of boiler end.}}{1017.87} \times \underset{\text{Working pressure.}}{60}}{\underset{\text{Number of rivets.}}{50} \times \underset{\text{Area of each rivet.}}{.4417}} = 2765 \text{ lbs. per cross-sectional square inch of rivet.}$$

By multiplying the area of the boiler end by the working pressure, we get the total steam pressure acting to shear the rivets, and by multiplying the number of rivets by the area of one rivet, we get the total area resisting the steam pressure, and then by dividing the one quantity into the other, we get the shearing stress per square inch of rivet section.

In the case of longitudinal seams, we have as follows, the pitch being say $2\frac{1}{8}$ and the rivets $\frac{3}{4}$.

$$\frac{\underset{\text{Diameter of boiler in inches.}}{36} \times \underset{\text{Steam pressure.}}{60} \times \underset{\text{Pitch.}}{2.125}}{\underset{\text{Rivets in one pitch.}}{2} \times \underset{\text{Area of rivet.}}{.4417}} = 5196 \text{ lbs. per square inch of rivet area.}$$

It is seen, therefore, that the stress placed by the steam pressure on the transverse seam is about one-half of that it places on the longitudinal seam. But, as before remarked, the transverse seam is subject to racking strains, from which the longitudinal seams are exempt; thus, for example, the expansion of the boiler diameter, whether uniform or not, does not strain the longitudinal seam, whereas it may severely strain the transverse seam.

The English Board of Trade rules, in assigning values to the various constructions and qualities of workmanship, assign a certain value, in the form of an addition to the factor of safety, which takes into account the difference in the stress upon the transverse and longitudinal seams, the quantities in each case having been determined both from experiment and from experience. A comparison of the different values may be made as follows:

The rules take a boiler shell made of the best material, with all the rivet holes drilled after the strakes are rolled into shape and put together, with all the seams (both longitudinal and transverse) fitted with double butt straps each at least five-eighths of the thickness of the shell plates they cover, and with all the seams at least double riveted, with rivets having an allowance of not more than 75 per cent. over the single shear, and provided that the boilers have been open to the inspection of their surveyors during the whole period of construction, and say that such a boiler shell shall be allowed a factor of safety (divisor of seam strength) of 5.

But for every departure from this, which they deem the best mode of construction, a penalty in the shape of an addition to the factor of safety is made. These additions to the factors of safety with reference to the longitudinal as compared to the transverse seams, are given in the following table:

Nature of the deviation in the construction or workmanship.	Addition to the factor of safety if the deviation is in the longitudinal seam.	Addition to the factor of safety if the deviation is in the transverse seam.
The holes not fair and good	.75	.2
Holes drilled out of place after bending	.15	.1
Holes drilled before bending	.3	.15
Holes punched after bending	.3	.15
Holes punched before bending	.5	.2
Joints lapped and double riveted instead of having double butt straps	.2	.1
Joints double riveted but have single butt straps	.3	.1
Joints single riveted and have a single butt strap	1.0	.2
Joints lapped and single riveted	1.0	.2

An addition of .25 is also made to the factor of safety, when the strakes are not entirely under or over. In Fig. 3256 for example,

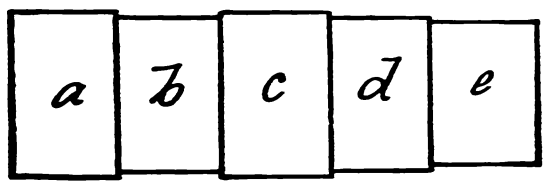

Fig. 3256.

strake *b* is within or under strake *a* at one end and strake *c* at the other end, hence *b* is entirely under; strake *c* is over *b* and *d*, and therefore entirely over; while strake *d* is under *c*, and over *e*, and therefore not entirely under nor entirely over.

When the rivet holes are punched they do not match properly, and unless the holes are punched somewhat smaller than the required size and reamed out afterwards, some rivets receive more stress than others, and may consequently shear in detail. It is customary, however, to punch the holes for ordinary stationary boilers, and it is with seams having punched holes therefore that we have at present to deal.

In the United States the rivet diameter and plate percentages are, in the boilers of stationary engines, usually made equal, and the reasons advanced both for and against this are as follows:

First, in favor of a greater plate percentage than rivet section, it is advanced that the plate gets thinner by wear, whereas the rivet does not, hence the wear reduces the plate section; that the plate is weakened by the punching process, and requires a greater percentage to make up its strength as compared to the rivet; that the rivets are usually of better material than the plates.

In favor of a greater rivet section than plate section, it is advanced that the shearing strength of iron is but about four-fifths of the tensile strength, and that with equal plate and rivet sections the rivet is therefore the weakest; that with punched holes the rivets may be sheared in detail, and that the rivets may be sheared gradually by the working of the joint from varying expansion and contraction.

From these premises the assumption is drawn that the weakening of the plate from being punched and from corrosion about offsets the excess of the tensile over the shearing strength, and that it is best therefore to employ such a pitch that the area of the rivet and of the metal left between the rivet holes shall be equal.

In order to do this the diameter of the rivet must be determined, and the following are the proportions given by the various authorities named:

TABLE OF THE DIAMETERS OF RIVETS FOR VARIOUS THICKNESSES OF PLATES WITH SINGLE RIVETED LAP JOINT.

Thickness of Plate.	Diameter of Rivets.					
	Lloyd's Rules.	Liverpool Rules.	English Dockyards.	Fairbairn.	Unwin.	Wilson.
in.	in.	in.	in.	in.	in.	in.
$\frac{5}{16}$	$\frac{5}{8}$	$\frac{5}{8}$	$\frac{1}{2}$	$\frac{5}{8}$	$\frac{11}{16}$	$\frac{5}{8}$
$\frac{3}{8}$	$\frac{5}{8}$	$\frac{5}{8}$	$\frac{5}{8}$	$\frac{3}{4}$	$\frac{3}{4}$	$\frac{11}{16}$
$\frac{7}{16}$	$\frac{5}{8}$	$\frac{3}{4}$	$\frac{3}{4}$	$\frac{21}{32}$	$\frac{13}{16}$	$\frac{3}{4}$
$\frac{1}{2}$	$\frac{3}{4}$	$\frac{13}{16}$	$\frac{3}{4}$	$\frac{3}{4}$	$\frac{7}{8}$	$\frac{3}{4}$
$\frac{9}{16}$	$\frac{3}{4}$	$\frac{13}{16}$	$\frac{7}{8}$	$\frac{27}{32}$	$\frac{7}{8}$	$\frac{7}{8}$
$\frac{5}{8}$	$\frac{3}{4}$	$\frac{7}{8}$	$\frac{7}{8}$	$\frac{15}{16}$	$\frac{15}{16}$	$\frac{7}{8}$
$\frac{11}{16}$	$\frac{7}{8}$	$\frac{7}{8}$	$\frac{7}{8}$	$1\frac{1}{32}$	1	$\frac{7}{8}$
$\frac{3}{4}$	$\frac{7}{8}$	$\frac{15}{16}$	1	$1\frac{1}{8}$	$1\frac{1}{16}$	1
$\frac{13}{16}$	$\frac{7}{8}$	1	1	$1\frac{7}{32}$	$1\frac{3}{32}$	1
$\frac{7}{8}$	1	$1\frac{1}{8}$	$1\frac{1}{8}$	...	$1\frac{1}{8}$	1
$\frac{15}{16}$	1	$1\frac{3}{16}$	$1\frac{1}{8}$	...	$1\frac{3}{16}$	$1\frac{1}{8}$
1	1	$1\frac{1}{4}$	$1\frac{1}{8}$	...	$1\frac{1}{4}$	$1\frac{1}{8}$

From the above it is seen that with thin plates the diameter of rivet employed is about twice the thickness of the plate, whereas as the thickness of plate increases the proportion of rivet diameter decreases, and the reasons for this are, first, that with rivets twice the thickness of thick plates and pitched so as to equalize the rivet and plate sections the pitch would be too great to permit of the seams being caulked steam tight.

The diameter of the rivet having been determined, the rivet area and area of plate left between the rivet holes may be made equal by determining the pitch by the following rule:

Rule.—To the area of the rivet divided by the plate thickness add the diameter of the rivet, and the sum so obtained is the pitch. The correctness of this rule may be shown as follows:

Suppose the rivet diameter to be $\frac{7}{8}$ inch = decimal equivalent .875, and its area will be .6013 square inch. Suppose the thickness of the plate to be $\frac{9}{16}$ = decimal equivalent .5625, then by the rule:

```
                    Rivet area.
Plate thickness = .5625).6013(1.0689
                         5625
                          38800
                          33750
                           50500
                           45000
                            55000
                            50625
```

To this 1.0689 we are to add the rivet diameter, thus:

```
1.0689
 .8750 = rivet diameter.
1.9439 = pitch of the rivets.
```

We have thus found the required pitch to 1.9439 inches, and as the joint is single riveted there are two half rivets or one whole one to one pitch, and if we subtract the diameter of the rivet from the pitch we shall get the width of the metal or plate left between the rivets, thus:

```
1.9439 = pitch of rivets.
 .8750 = diameter of rivet.
1.0689 = distance in inches between the rivets.
```

If now we multiply this distance between the rivets by the thickness of the plate, we shall get the area of the plate that is left between the rivet holes, thus:

```
                1.0689 = width of plate between rivets.
                 .5625 = thickness of plate.
                 53445
                21378
Area of plate  64134
  between     53445
  rivets =   .60125625
```

Here then we find the area of plate left between the rivet holes to be 6.01 square inches, and as the area of the rivet is 6.01 square inches, the two are shown to be equal.

We may now place the various rivet diameters and the pitches that will make the rivet area and plate area in a single riveted joint equal in a table as follows:

TABLE OF RIVET DIAMETERS AND PITCHES FOR SINGLE RIVETED LAP JOINTS.

Thickness of Plate.	Diameter of Rivet.	Pitch.
$\frac{1}{4}$	$\frac{1}{2}$	$1\frac{1}{4}$
$\frac{5}{16}$	$\frac{5}{8}$	$1\frac{5}{8}$
$\frac{3}{8}$	$\frac{11}{16}$	$1\frac{11}{16}$
$\frac{7}{16}$	$\frac{3}{4}$	$1\frac{3}{4}$
$\frac{1}{2}$	$\frac{3}{4}$	$1\frac{5}{8}$
$\frac{9}{16}$	$\frac{7}{8}$	2
$\frac{5}{8}$	$\frac{7}{8}$	$1\frac{7}{8}$
$\frac{11}{16}$	$\frac{7}{8}$	$1\frac{3}{4}$
$\frac{3}{4}$	1	..
$\frac{13}{16}$	1	2
$\frac{7}{8}$	1	$1\frac{1}{8}$
$\frac{15}{16}$	$1\frac{1}{8}$	$2\frac{1}{8}$
1	$1\frac{1}{8}$	$2\frac{1}{8}$
$1\frac{1}{16}$	$1\frac{1}{8}$	$2\frac{1}{8}$
$1\frac{1}{8}$	$1\frac{3}{16}$	$2\frac{1}{4}$
$1\frac{1}{4}$	$1\frac{3}{16}$	$2\frac{1}{8}$

The rivets in double riveted lap joints, and in butt strap joints having a single cover, are spaced alike, because in both cases there are two rivets in one pitch, and the rivets are in single shear.

As there are two rivets in one pitch (instead of only one as in a single riveted joint), therefore the percentage of rivet section is doubled, and the plate section must therefore be doubled if the plate and rivet sections are to be made equal, and the rule for finding the required pitch is as follows:

Rule.—To the amount of rivet area in one pitch, divided by the thickness of the plate, add the diameter of the rivet.

Example.—Let the plate thickness be as in the last example $\frac{9}{16}$, decimal equivalent = .5625, and the rivet diameter be $\frac{7}{8}$ inch = decimal equivalent .875, the area of one rivet being .6013 square inch, and the pitch is calculated as follows:

```
                 .6013 = area of one rivet.
                     2 = the rivets in one pitch.
Plate thickness = .5625)1.2026(2.1377
                        1.1250
                          7760          2.137
                          5625          .875 = rivet diameter.
                          21350         3.012 = pitch.
                          16875
                           43750
                           39375
                            43750
                            39375
                             4375
```

We find, therefore, that the pitch is 3.012, or 3 inches (which is near enough for practical purposes), and we may now make it clear that this is correct.

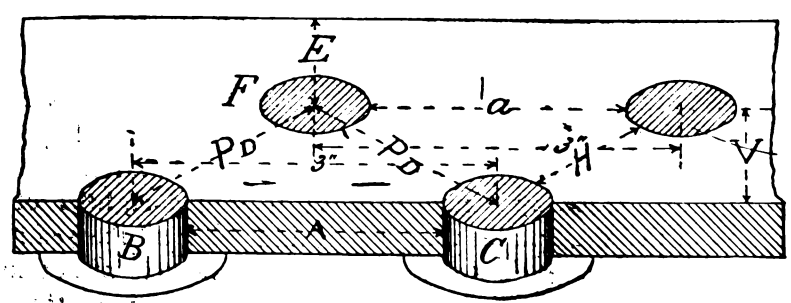

Fig. 3257.

In Fig. 3257 the joint is shown drawn one-half full size, and the length A of plate left between the rivet holes measures (as nearly as it is necessary to measure it) $2\frac{5}{32}$ inches, or 2.156, and if we

multiply this by the thickness of the plate = .5625 inch, we get 1.2 square inches as the area of the plate left between the rivet holes.

Now there are two rivets in a pitch (as one-half of B, one-half of C, and the whole of F), and as the area of each rivet is .6, therefore the area of the two will be 1.2, and the plate section and rivet section are shown to be equal.

The area at *a* is obviously the same as that at A, because the pitches of both rows of rivets are equal, this being an ordinary zigzag riveted joint.

We may now consider the diagonal pitch of the rivets, using the rule below.

$$\frac{\text{The pitch} \times 6, + 4 \text{ times the rivet diameter}}{\text{divided by } 10} = \text{the diagonal pitch } p_D.$$

In this example the pitch has been found to be 3 inches, hence we have

```
   .875 = diameter of rivet.
      4 = constant.
  -----
  3.500

      3 = pitch of the rivets.
      6 = constant.
     --
     18
    3.5 = rivet diameter multiplied by 4.
10)21.5(2.15 = the diagonal pitch.
   20
   --
    15
    10
    --
     50
```

The diagonal pitch, that is, the distance p_D, Fig. 3257, is therefore found to be 2.15, or $2\frac{1}{8}$ inch full.

The amount of metal left between the rivets, measured on the diagonal pitch, is twice the dimension H multiplied by the thickness of the plate, and as this (with the diagonal pitch determined as above) always exceeds the pitch A or *a*, therefore if the plate fails, it will be along the line *a*, and not through the diagonal pitch.

We may now consider the total amount that the plates overlap in a double riveted lap joint zigzag riveted, this amount being twice the distance E, added to the distance V between the rows of rivets.

Placed in formula, the rule appears as follows, *d* representing the rivet diameter, and *p* the pitch.

$$\frac{\sqrt{(11p + 4d)(p + 4d)}}{10} = \text{distance V between the rows of rivets}$$

As this rule involves the extraction of the square root of the sum of quantities above the line, and as in determining the diagonal pitch, we have already determined the distance V, it is unnecessary to our purpose to carry out this latter calculation, as it is easier to find the diagonal pitch, and then, after drawing the joint, the distance between the rows of rivets can be measured if it is required, as it might be in finding the length of plate required to roll into a strake for a boiler of a given diameter and having a double riveted lap joint.

We may now consider chain riveted joints in comparison with zigzag riveted joints, which is especially necessary, because it has been assumed by some that the second row of rivets in a chain riveted joint added nothing to the strength of the joint.

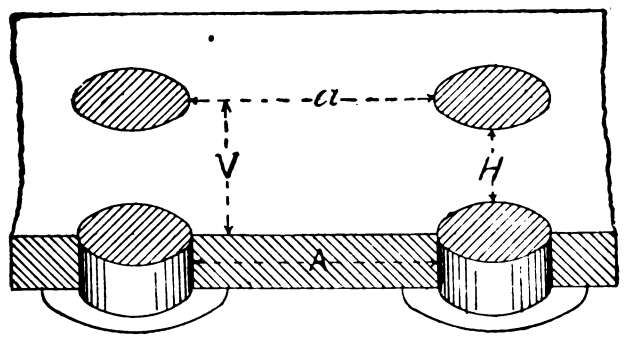

Fig. 3258.

Fig. 3258 represents a chain riveted joint, having the same thickness of plate, rivet diameter and pitch as the zigzag riveted joint in Fig. 3257, and it will be seen that the plate sections at A and at *a* are the same in the two figures, and as there are four half rivets, which are equal to two rivets, in one pitch, therefore the strength of the two joints is equal.

Each joint can be as efficiently caulked as the other, as the rivet spacing is the same and the edge of the plate is the same distance from the rivets in both cases.

The pitch of the rivets is obtained by the same rule as for zigzag riveted joints, and all we have now to consider is the distance apart of the two rows of rivets or distance V in the Fig. 3258, and

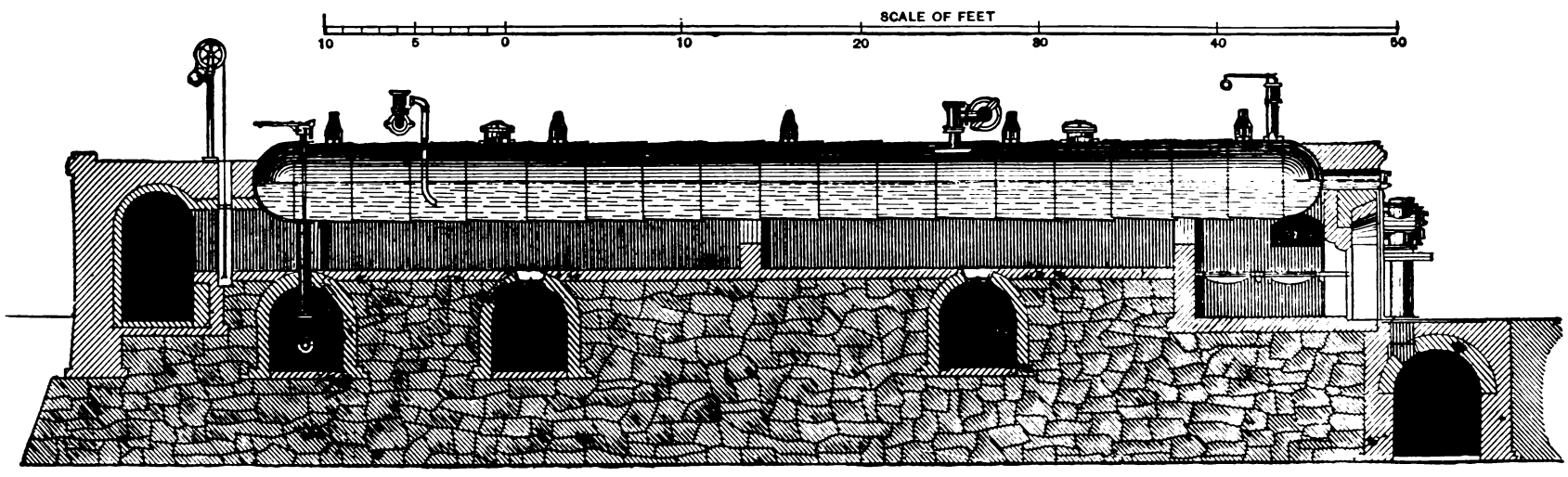

Fig. 3259.

The distance E, Fig. 3257, is usually made one and a half times the diameter of the rivet, this being found to give sufficient strength to prevent the edge of the plate from tearing out and to prevent the rivet from shearing the plate out to the edge, rupture not being found to occur in either of these directions.

The rule for finding the distance V, when the diagonal pitch has been determined by the rules already explained, is as follows:

Rule.—To the pitch multiplied by 11, add 4 times the rivet diameter, then multiply by the pitch, plus 4 times the rivet diameter. Then extract the square root and divide by 10.

for this there are two rules, the first being that it shall not be less than twice the diameter of the rivet, which would leave a dimension at H in the figure equal to the diameter of the rivet. The second rule is that a better proportion than the above is to multiply the diameter of the rivet by 3. This makes the dimension at H equal to twice the rivet diameter.

When the joints have double buttstraps, the rivets may be spaced as wide as the necessity for tight caulking will admit, because, on account of the rivets being in double shear, the rivet percentage exceeds the plate percentage.

The allowance for the rivets being in double shear is 75 per cent., or in other words, a rivet in double shear is allowed 1.75 times the area of the same size rivet in single shear.

STATIONARY ENGINE BOILERS.

The simplest form of horizontal boiler is the plain cylinder boiler, an example of which is given in Fig. 3259, and which is largely used in iron works and coal mines.

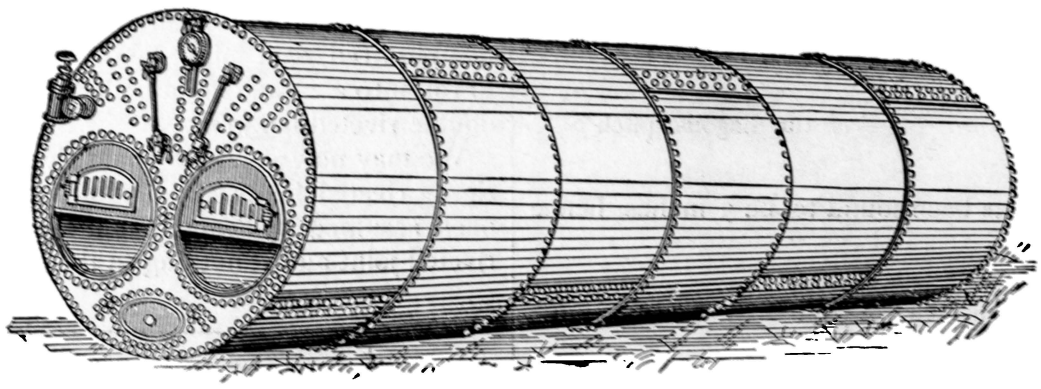

Fig. 3260.

Boilers of this class are easily cleaned, because the whole interior can be readily got at to clean.

As the bottom of this boiler gets thinned from wear, the boiler is turned upside down, thus prolonging its life.

Fig. 3260 represents an internally fired flue boiler, known as the

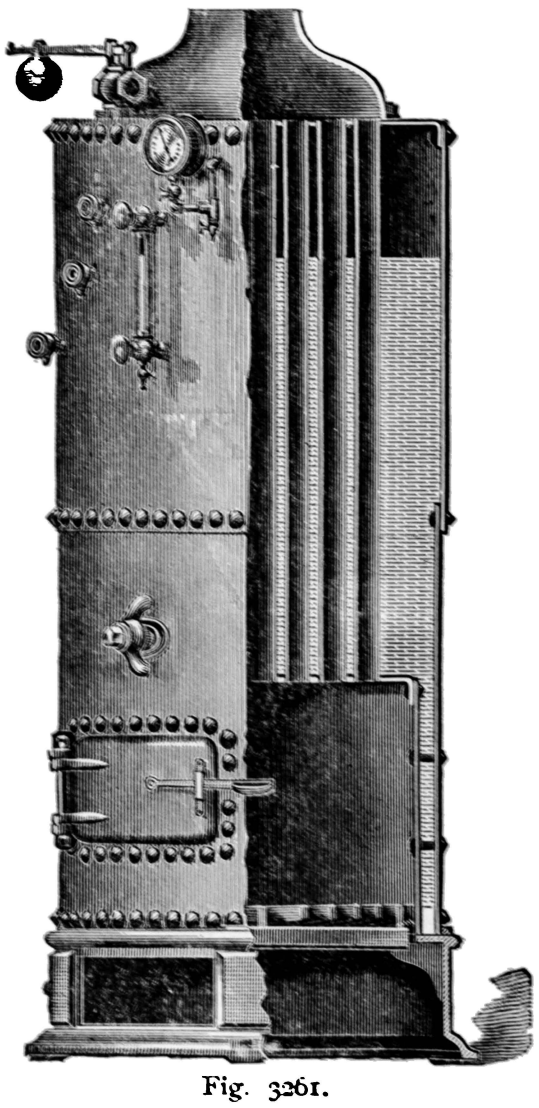

Fig. 3261.

Cornish or Lancashire boiler. The furnace is at one end of the flues, the fire passing through them to the chimney. There is here obviously more heating surface than in the plain cylinder boiler, but somewhat less facility for cleaning.

The Galloway boiler is of this class, but has vertical water tubes placed at intervals in the flues. These water tubes are wider at the top than at the bottom. They serve to break up the body of heat that passes through the flues, and increase the heating surface while extracting more of the heat and promoting the circulation of the water in the boiler.

A water tube is one in which the water is inside and the fire outside, as distinguished from a fire tube, in which the fire passes through the tube and the water is outside. A water tube is stronger than a fire tube, because the former is subject to bursting pressure and the latter to collapsing pressure.

Vertical boilers are internally fired, and in the ordinary forms have no return tubes or flues, examples of those used for small stationary engines being given as follows.

Fig. 3261 represents an ordinary form with vertical tubes. The upper ends of the tubes here pass through the steam space—a condition that under the moderate pressures and firing that this class of boiler is subjected to is of less importance than it is in boilers having higher chimneys and therefore a more rapid draught, and using higher pressures of steam. Furthermore, the small diameters and lengths or heights in which these boilers are made give them ample strength with shells and tubes of less

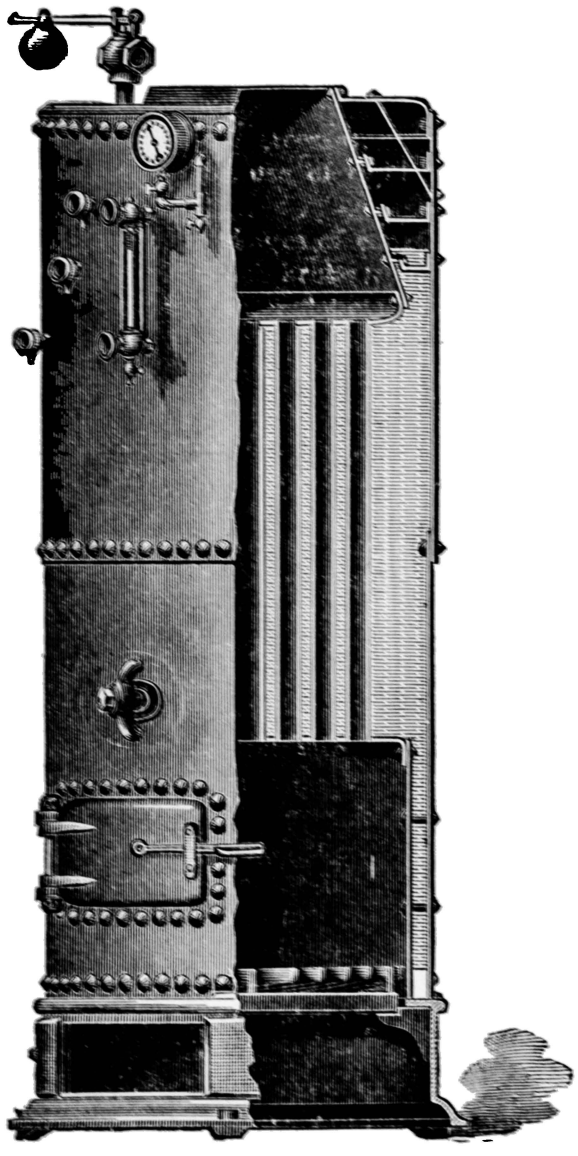

Fig. 3262.

thickness, while the condition of tube ends with steam on one side and fire on the other is permissible without the injurious effects that ensue under rapid combustion and high pressures.

The crown sheet of the fire boxes or furnaces of this class of boiler is very effective heating surface, first, because of the great depth

(and therefore weight) of water resting upon it insuring constant contact between the water and the plate, while there is no danger of the crown sheet burning from shortness of water.

A similar boiler, but with the upper ends of the tubes below the water level, is shown in Fig. 3262.

From the small diameters of these boilers, the flat surfaces are not stayed except to the extent that the holding power of the tubes serves that end.

A return flue vertical boiler is shown in Figs. 3263 and 3264. The whole of the surfaces having contact with the fire also have contact with the water, and the height of the crown sheet removes it from the intense heat of the fire. It is stayed to the top of the boiler. The fire box or combustion chamber being taper increases the effectiveness of its sides as heating surface, since the heat in its vertical passage impinges against it.

The products of combustion pass from the top of the combustion chamber through short horizontal flues, which enter an annular space surrounding the lower section of the boiler, and from this space vertical flues pass to a corresponding space at the bottom of the boiler.

The passage of the steam generated at the sides of the combustion chamber is facilitated by the taper of the chamber, which gives increased room for the steam as it gathers in ascending.

Vertical boilers for high pressures, as from 60 to 120 lbs. per inch, are represented in the figures from 3265 to 3260.

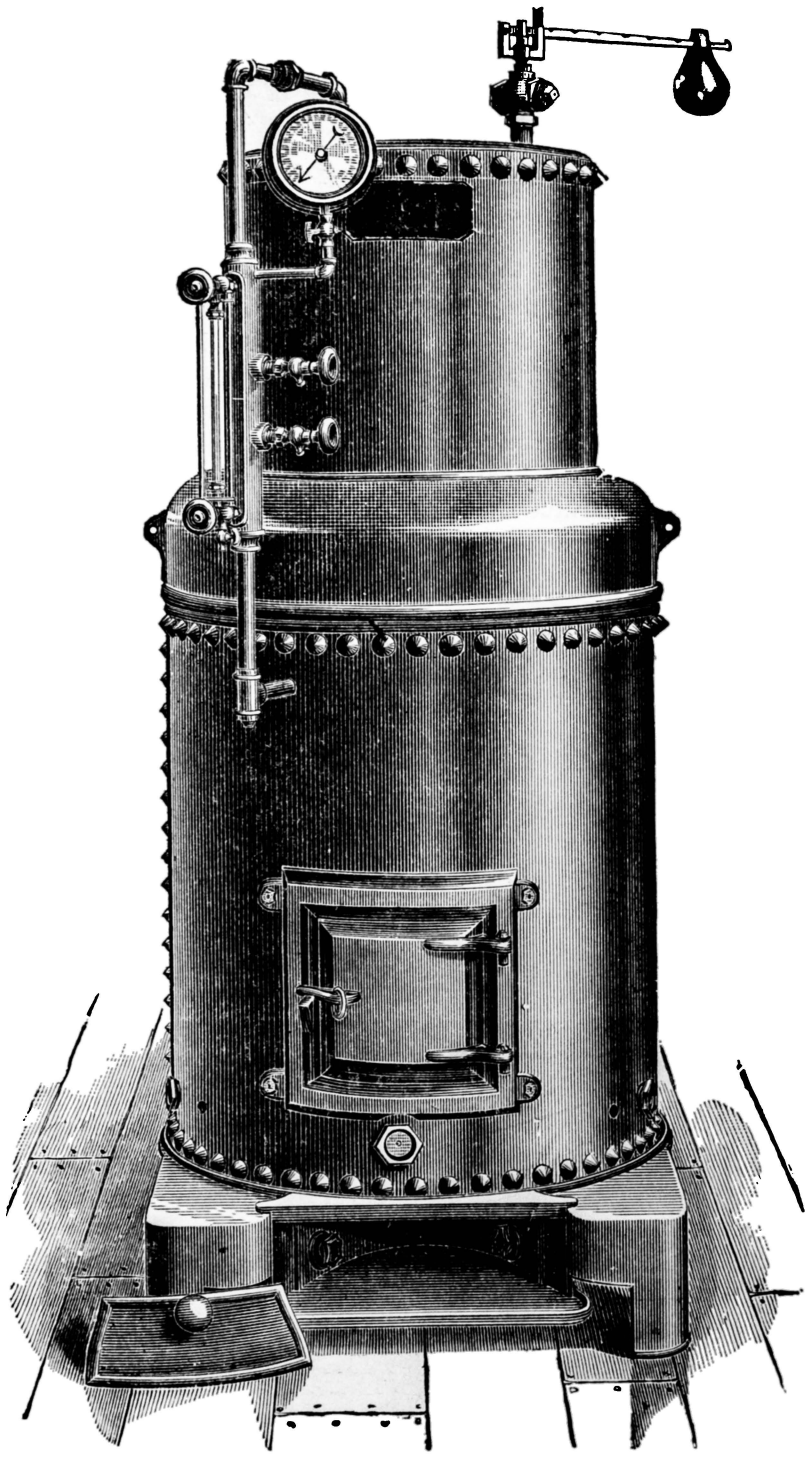

Fig. 3263.

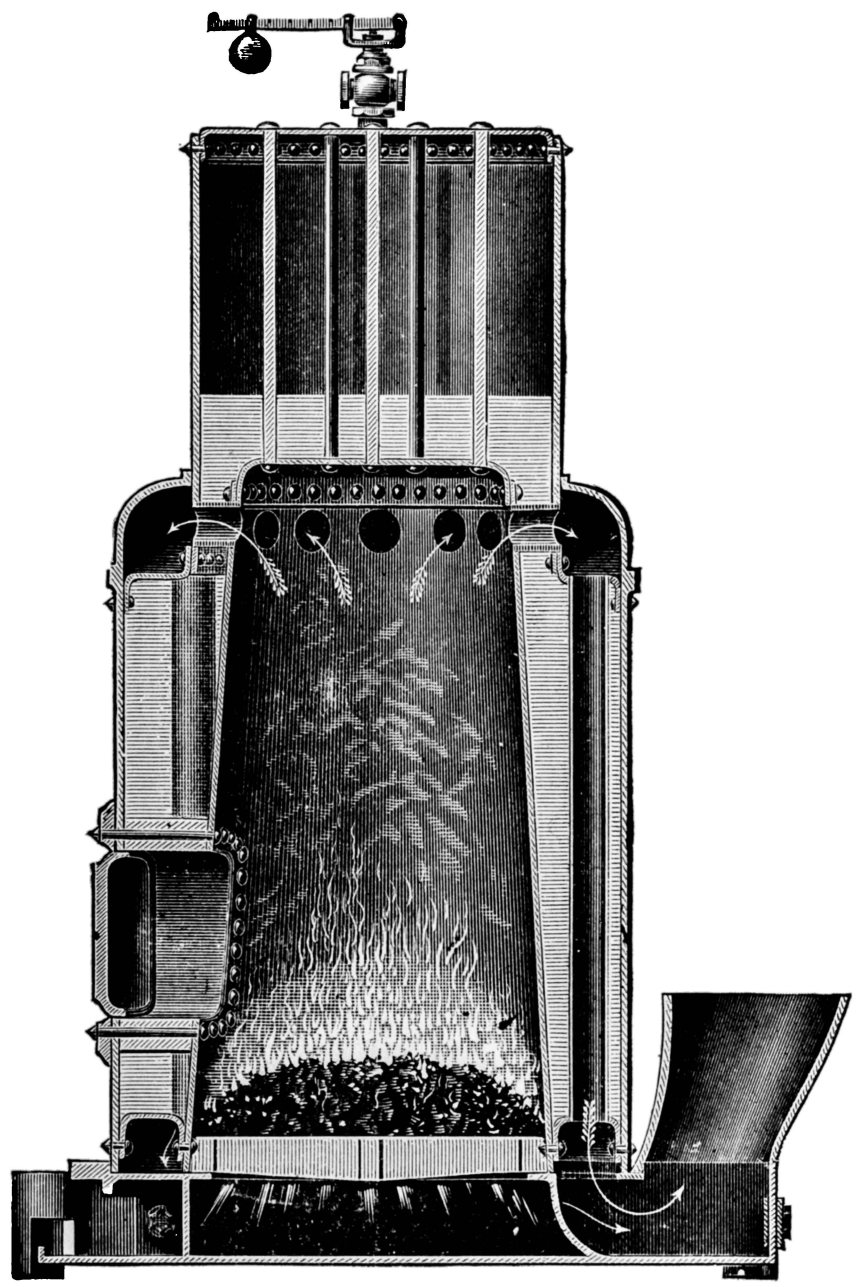

Fig. 3264.

In boilers of this class, a majority contain water tubes, which, when properly arranged, promote rapid evaporation and circulation.

A boiler with *Field* tubes is shown in Fig. 3265. It consists of an outer shell and a cylindrical fire box, from the crown sheet of which a number of Field tubes are suspended in the fire box or combustion chamber.

Fig. 3266 is a sectional view of a Field tube, the construction being as follows:

The outer tube, which is expanded into the tube plate, is enclosed at its lower end, and has at its upper end in the water space of the boiler a perforated mouth piece, from which is suspended an inner tube that extends nearly to the bottom of the outer tube.

As the outer tube is bathed in the fire, steam is generated very rapidly, and a thorough and rapid circulation is kept up, the water passing down the inner and up the outer tubes, as denoted by the arrows.

The outer tube is spread out at the upper end to a slight cone, so that it cannot be forced out of the tube sheet by the pressure, and as it hangs free, there is no liability for it to loosen or get leaky from expansion and contraction.

From the great amount of heating surface obtained with these tubes, the fire box may be kept at a minimum diameter for the duty, while still leaving a wide space for the water leg, which facilitates the circulation.

The damper, which is suspended in the uptake, spreads the fire sideways.

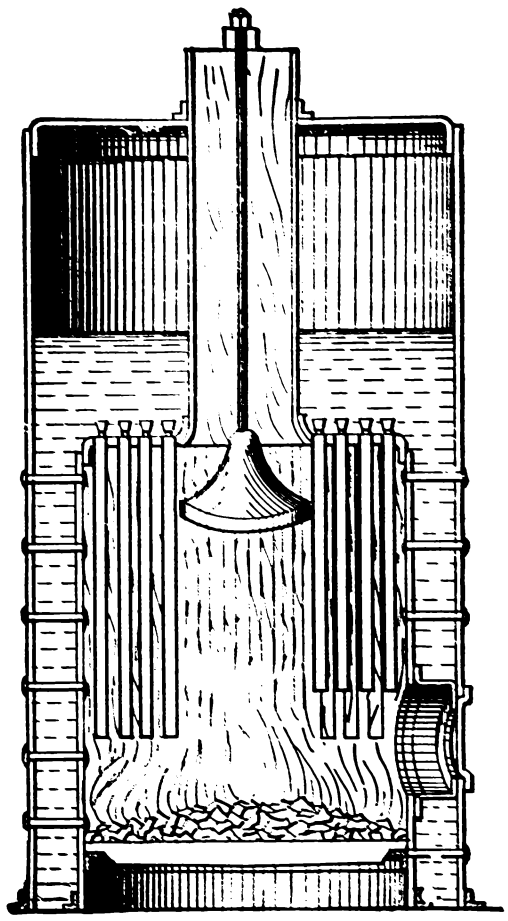

Fig. 3265.

Fig. 3267 represents the arrangement of Field tubes in a boiler.

A boiler of this form may for a given capacity be made lighter

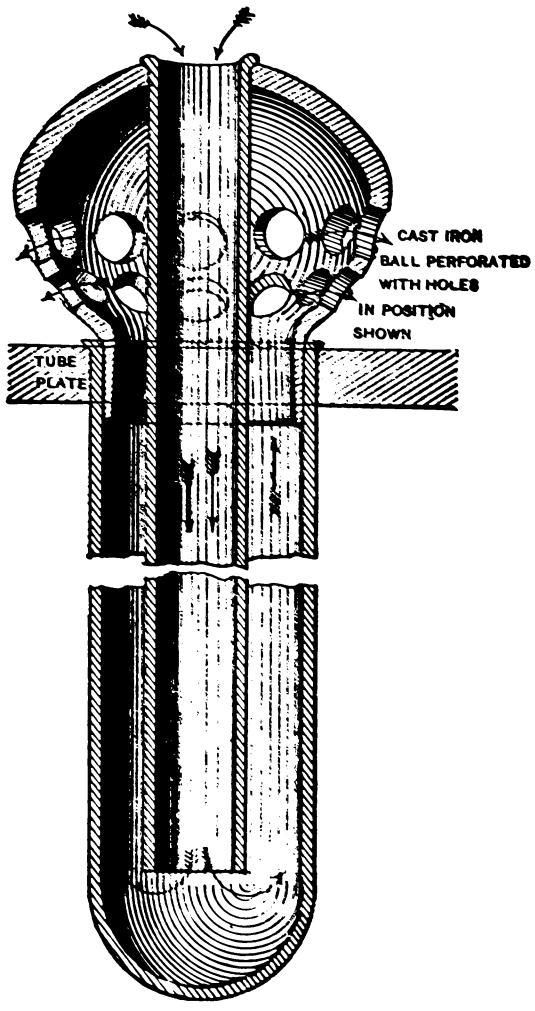

Fig. 3266.

and smaller than in any other of the ordinary forms, while the rapid circulation acts to keep the tubes clean.

The inner tubes may be thin, because they are under pressure both inside and out, while the outer tubes may be thin, because they are under a bursting strain, whereas a fire tube is under collapsing pressure.

A design of high rate boilers, in which the uptake does not

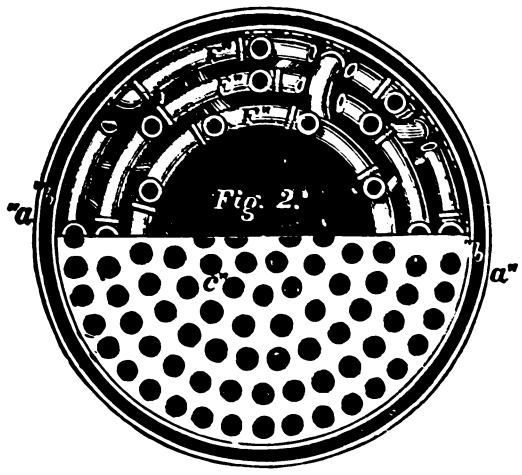

Fig. 3267.

come into contact with the water, and water tubes are employed, is shown in Fig. 3268. In the fire box is an inclined tube which promotes the circulation, and is very effective heating surface, and in the combustion chamber are a number of vertical water tubes.

Two manholes give access for cleaning purposes.

The efficiency of the heating surface in this class of boiler is increased from the fact that, as the heat does not pass direct through the boiler, it impinges against the surface. In Fig.

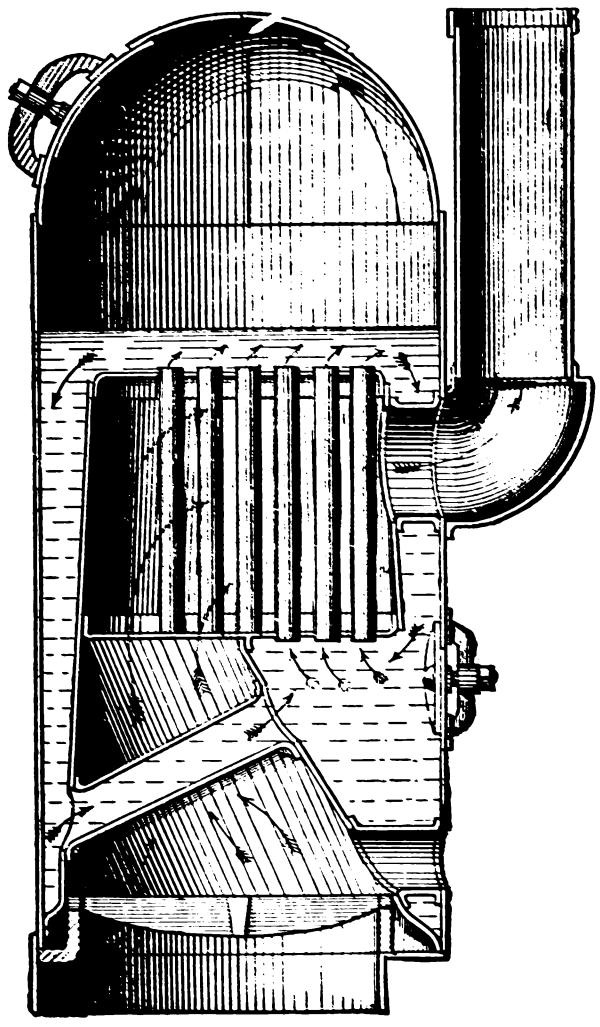

Fig. 3268.

3269, for example, the exit from the spherical fire box is on one side of the boiler, and the uptake on the other, the heat passing from the fire box into a combustion chamber, and thence through the horizontal fire tubes to the uptake.

The crown sheet is here stayed by gusset stays, but if made spherical, as in Fig. 3270, the stays may be omitted.

Figs. 3271, 3272, and 3273 illustrate a 60-inch horizontal return tubular boiler constructed by the Hartford Steam Boiler Inspection and Insurance Company. This class of boiler has found much favor in the United States. It is an externally fired, return tube boiler, the fire passing beneath the boiler and returning through

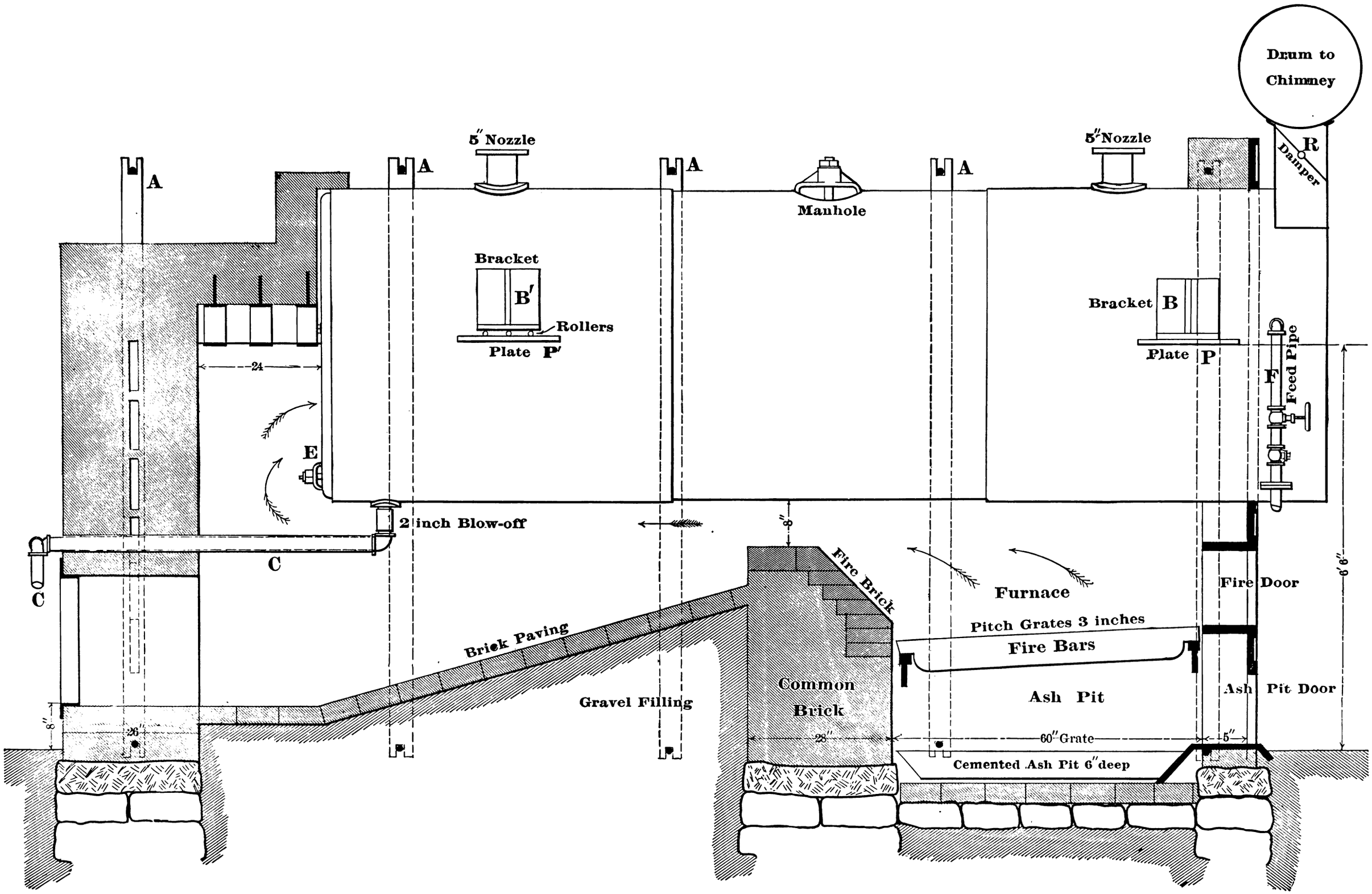
Drum to Chimney
R
Damper
5″ Nozzle
5″ Nozzle
A
A
A
A
Manhole
Bracket
B′
Rollers
Plate P′
Bracket B
Plate P
F
Feed Pipe
24
E
2 inch Blow-off
C
C
8″
Fire Brick
Furnace
Fire Door
6′ 6″
Pitch Grates 3 inches
Fire Bars
Brick Paving
Common Brick
Ash Pit
Ash Pit Door
Gravel Filling
8″
26″
28″
60″ Grate
5″
Cemented Ash Pit 6″ deep

Fig. 3271.

the tubes to the front end of the boiler, whence it passes through the drum to the chimney.

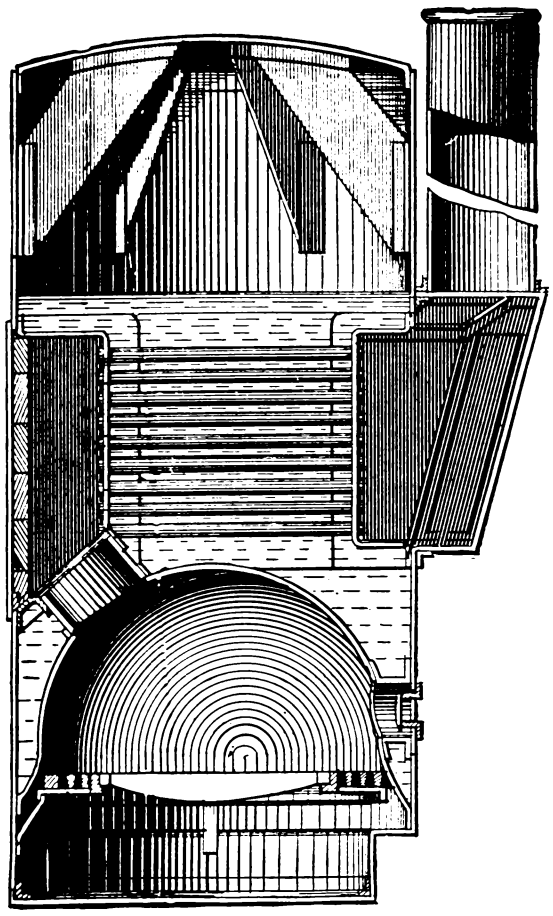

Fig. 3269.

The boiler is supported on the brackets B, B′, the front one, B, resting on an iron plate imbedded in the brickwork, and the back ones on rollers which rest on the plates P′ imbedded in the brickwork. This allows the boiler to expand

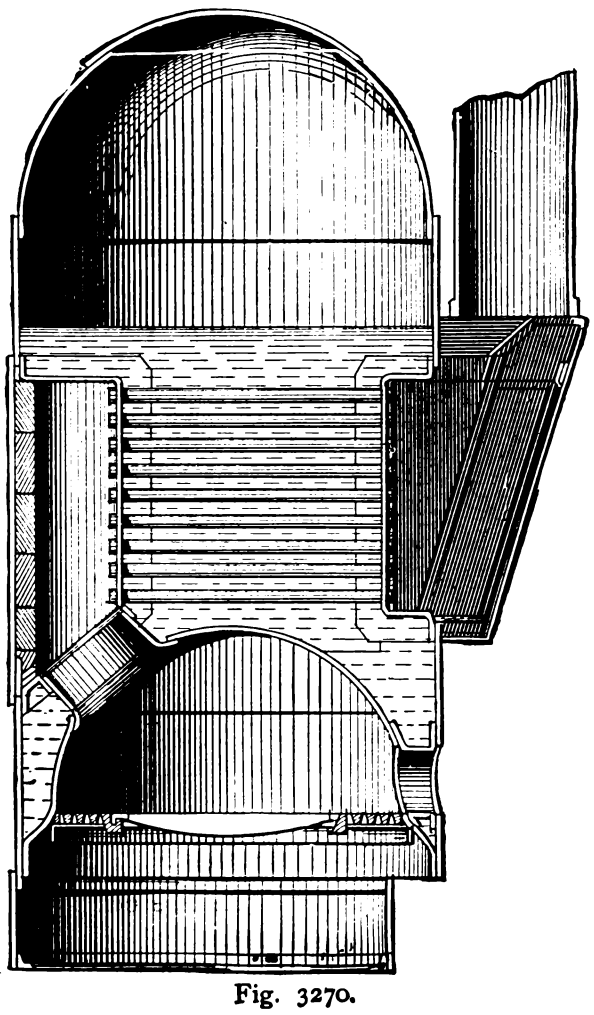

Fig. 3270.

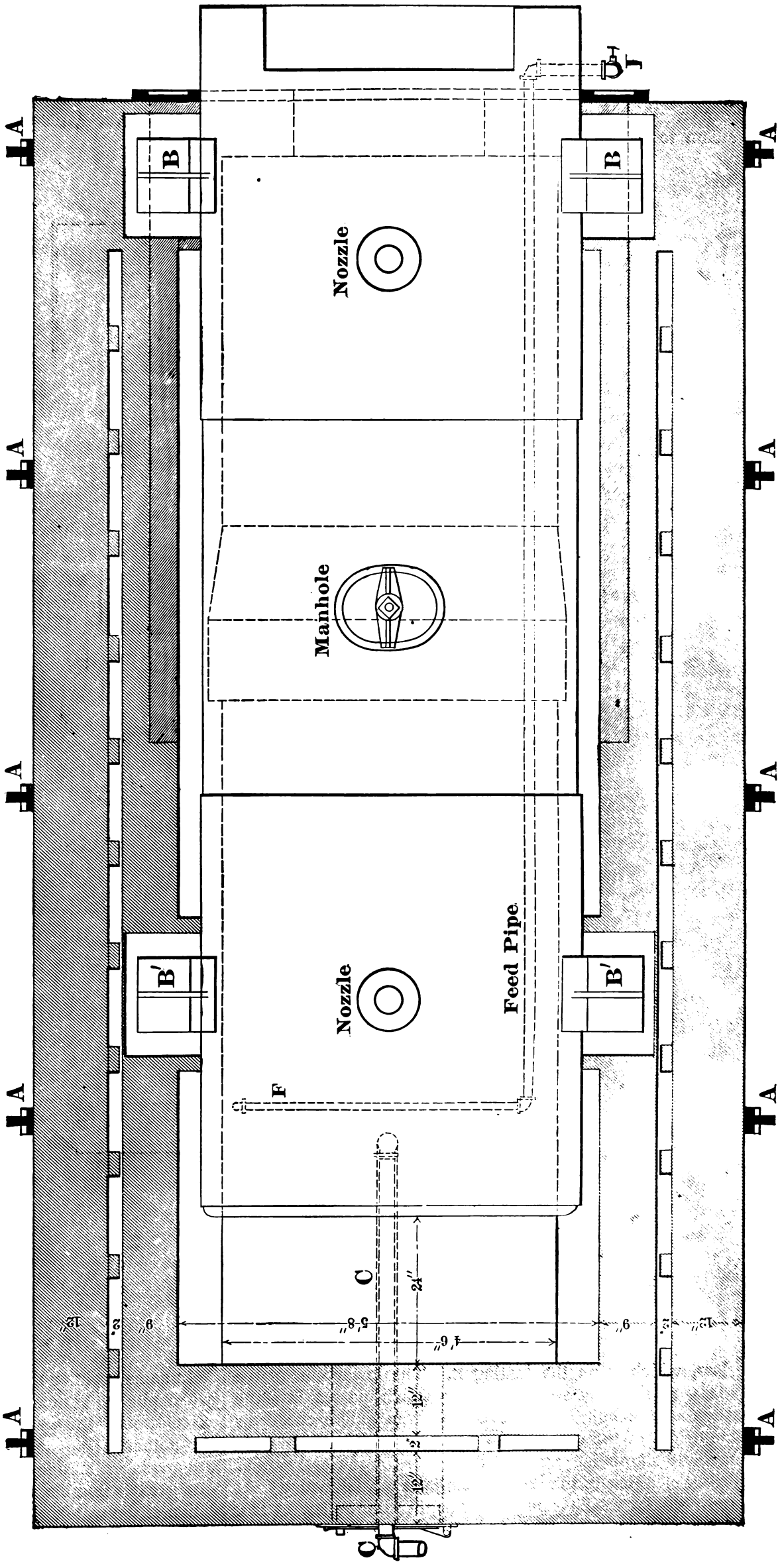

Fig. 3272.

and contract endways under variations of temperature without racking the brickwork.

A, A, etc., are for holding the brickwork together. The blow-off pipe C is for emptying or blowing down the boiler. The feed-pipe F enters the front end of the boiler, passes along it, and then crosses over. A pipe H from the steam space of the boiler supplies steam to the steam gauge G, and to the upper end of the gauge glass, which is on the casting K. The lower end of the gauge glass receives water from a pipe which passes into the water space of the boiler; at J are the three gauge cocks for testing the height of the water in the boiler.

The manhole affords ingress into the boiler for inspecting and for scaling or cleaning it, the nozzles being for a safety valve. At E is a hand-hole for washing out and cleaning the boiler. P is a damper in the fire door for admitting air above the fire bars, and R is a damper for regulating the draught.

In the brick walls that support the boiler there are air spaces to prevent the conduction of the heat through and prevent cracking of the brickwork. The tubes are arranged in vertical and horizontal rows and are equally spaced throughout.

Fig. 3274 represents the front end, and Fig. 3275 a longitudinal sectional view of the front end of a boiler of this class. In this case, however, the pipes for the water gauge pass direct into the boiler.

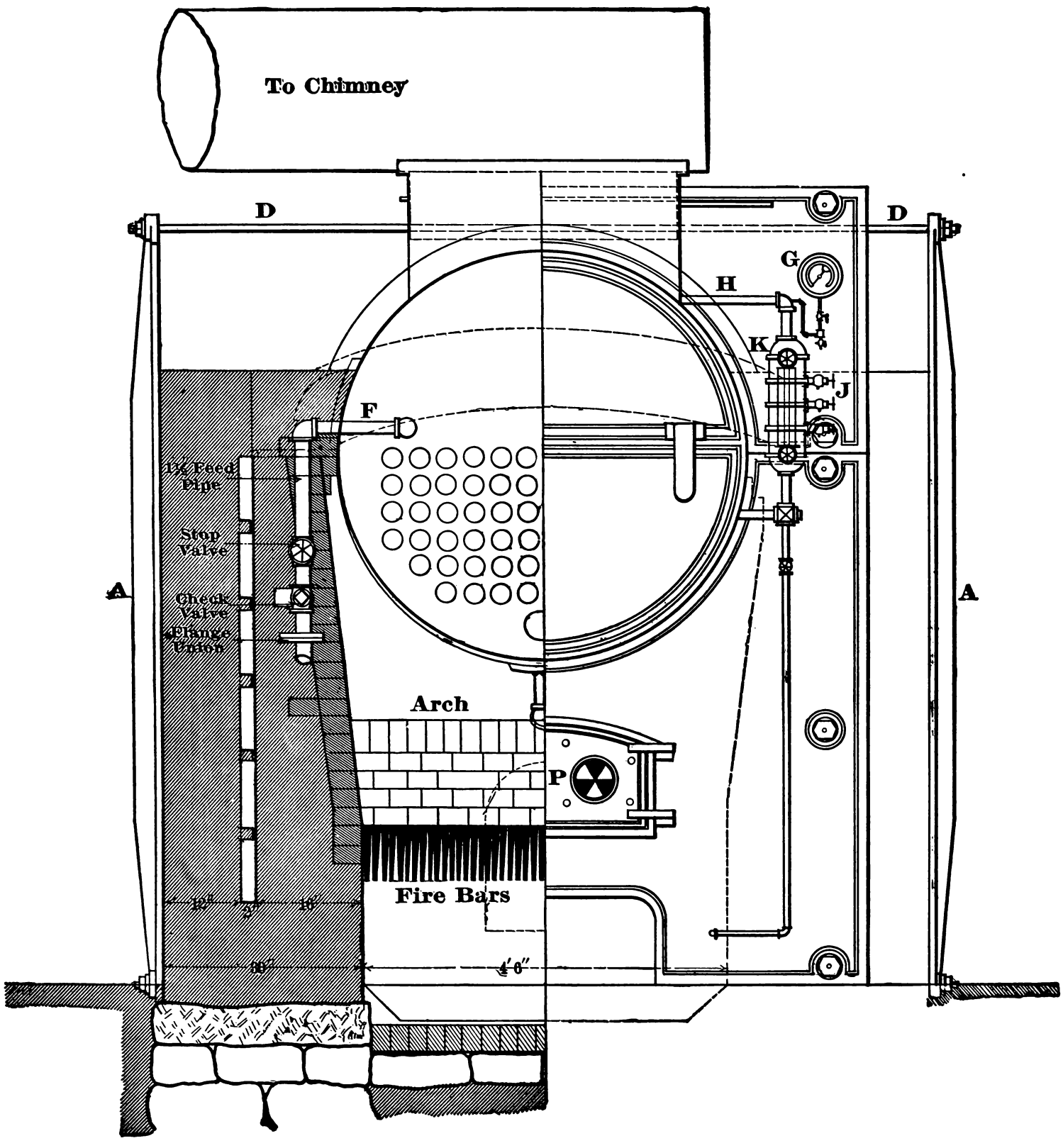

Fig. 3273.

In some practice the tubes are arranged as in Fig. 3276, being wider pitched or spaced in the middle of the boiler to increase the circulation of the water in the boiler.

Another arrangement is shown in Fig. 3277, the tubes being *staggered* or arranged zigzag. This permits of the employment of a greater number of tubes, but does not afford such free circulation of the water.

Fig. 3278 represents an arrangement where the tubes are in rows both vertically and horizontally.

Fig. 3279 represents a boiler by the Erie Iron Works, the details of the setting being as follows:

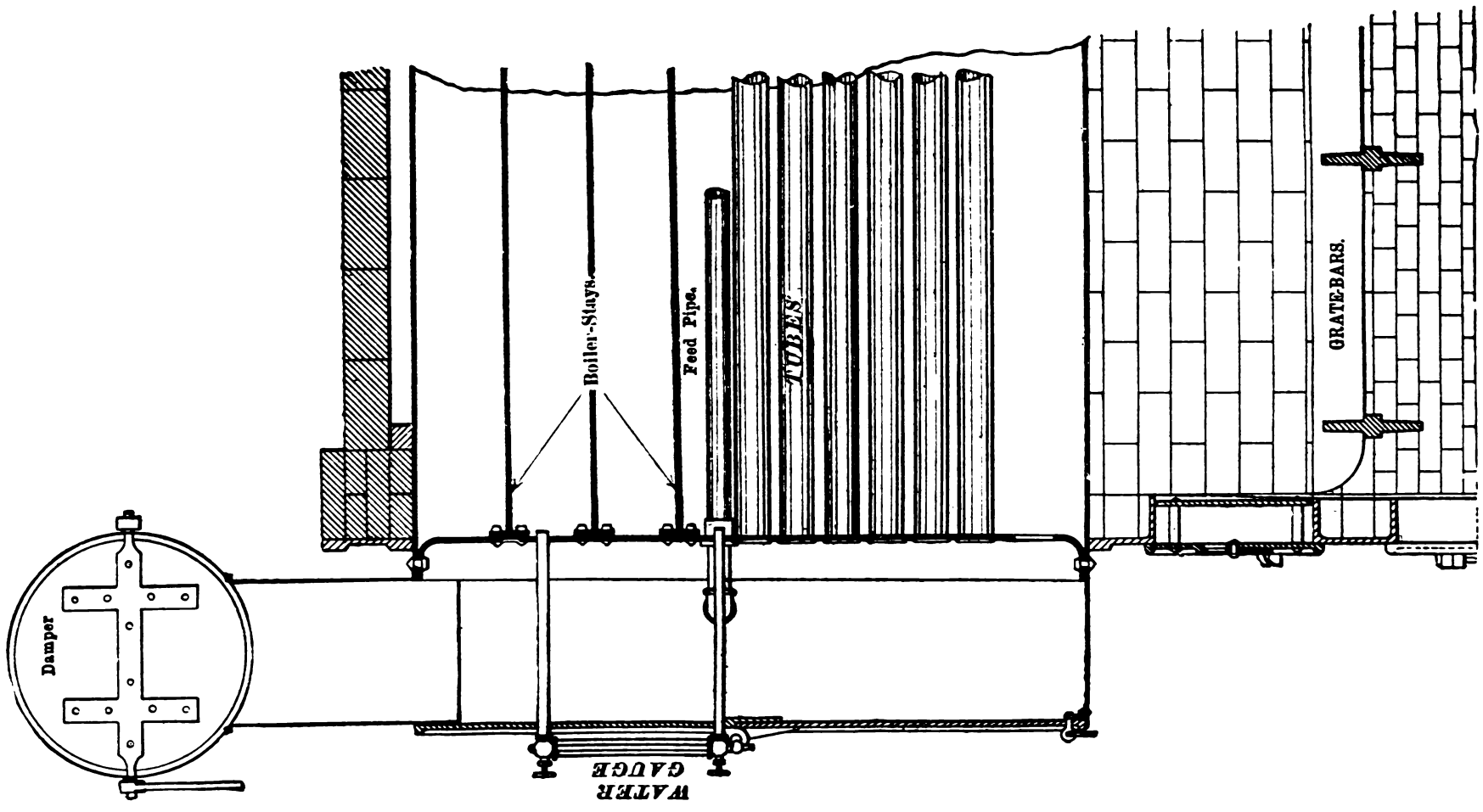

Fig. 3275.

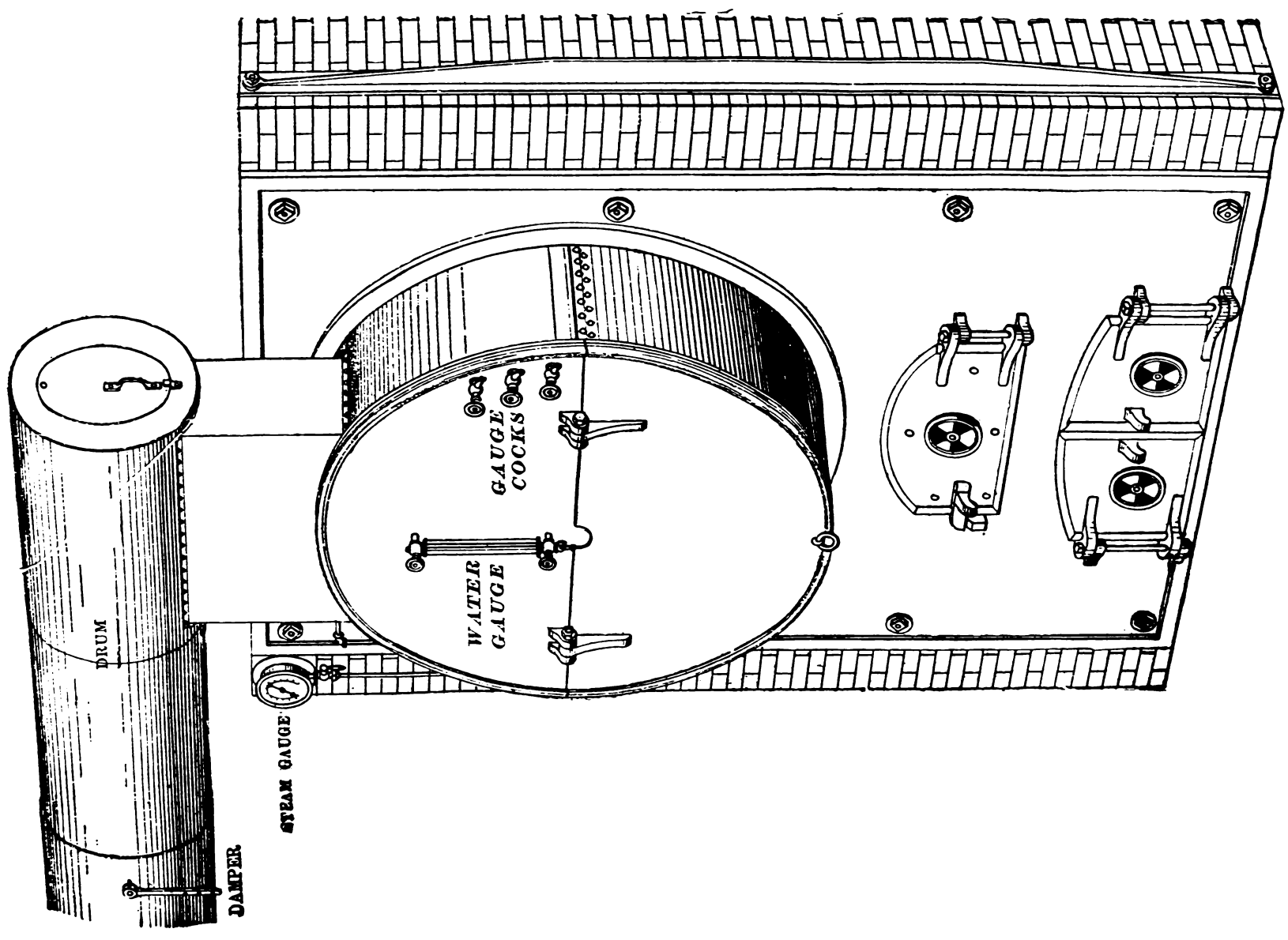

Fig. 3274.

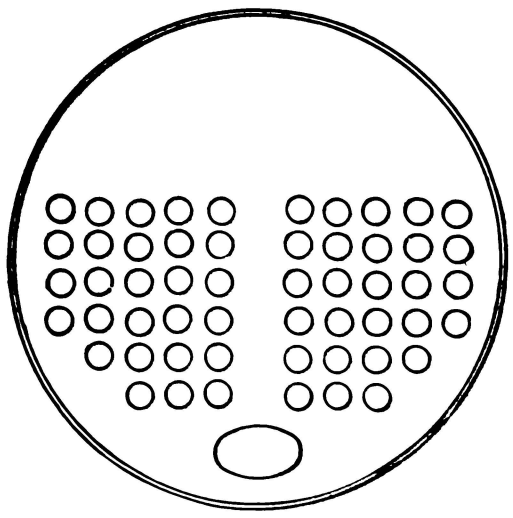

Fig. 3276.

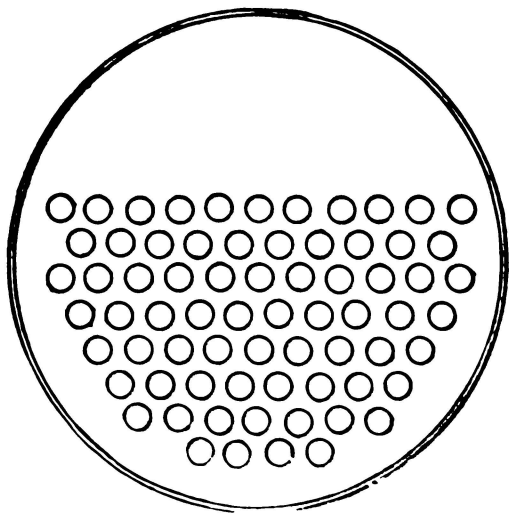

Fig. 3277.

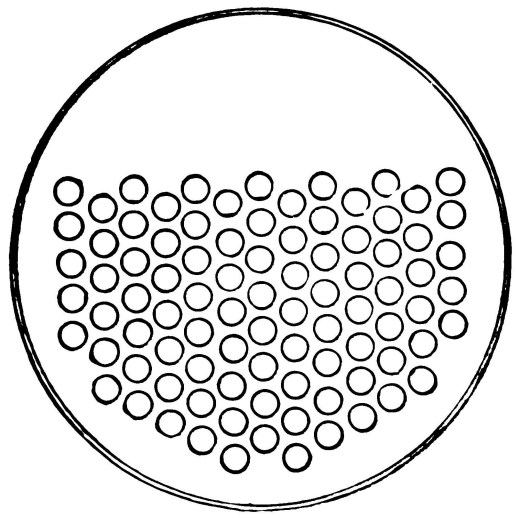

Fig. 3278.

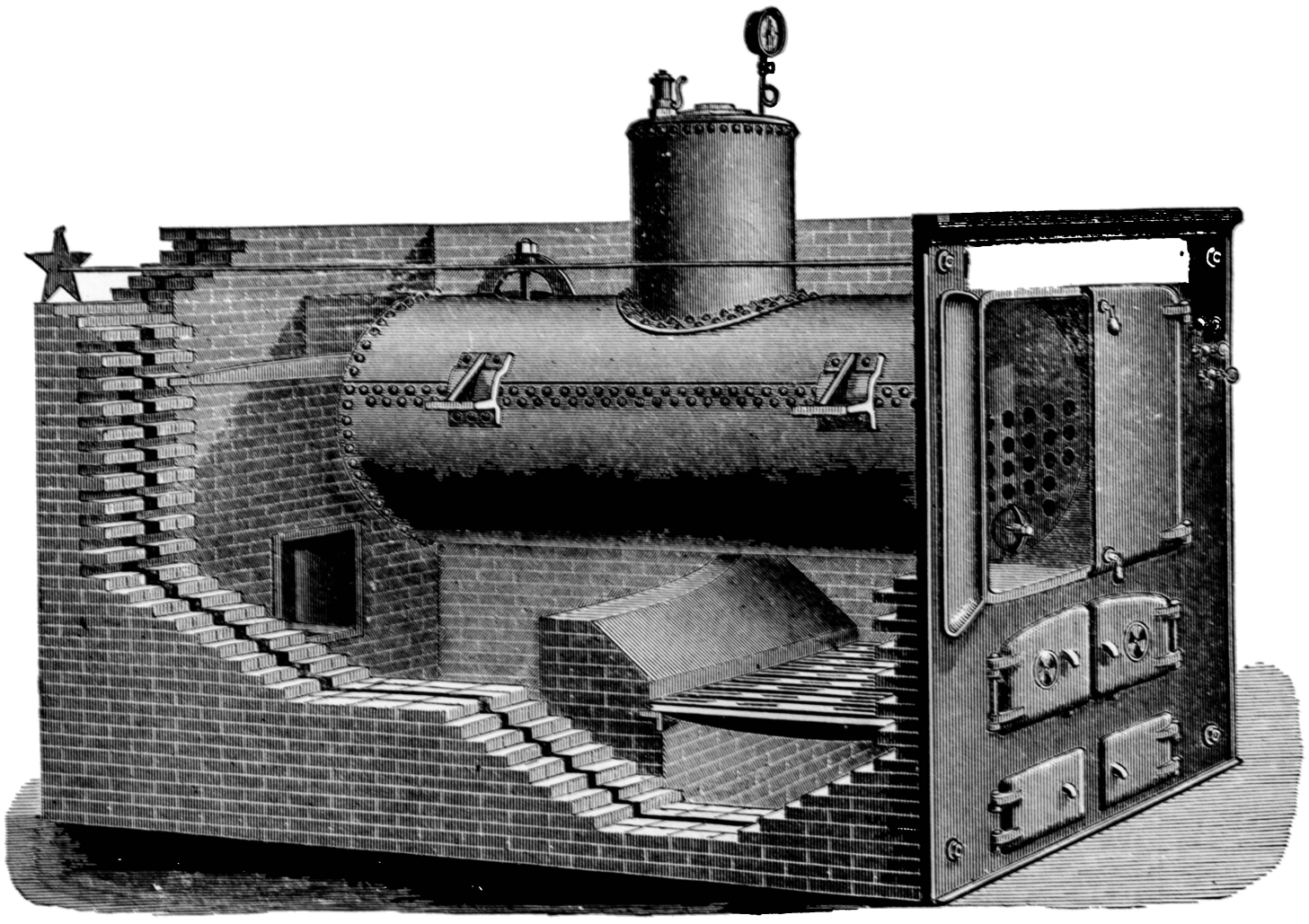

Fig. 3279.

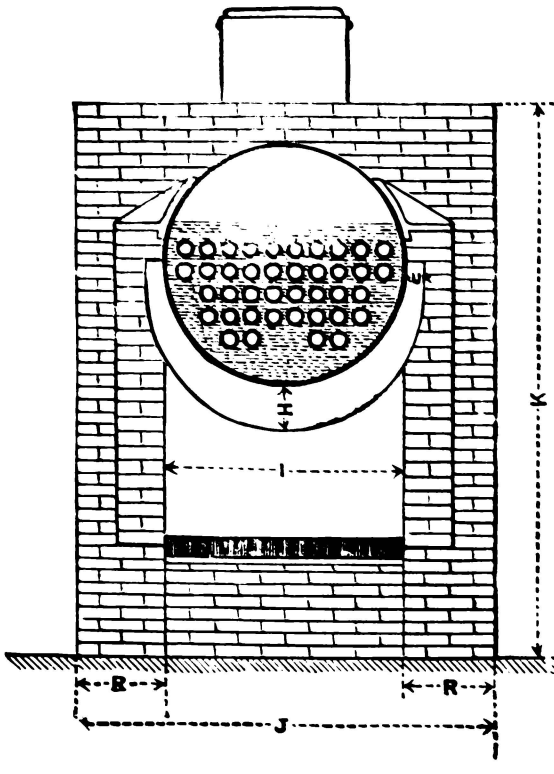

Fig. 3280.

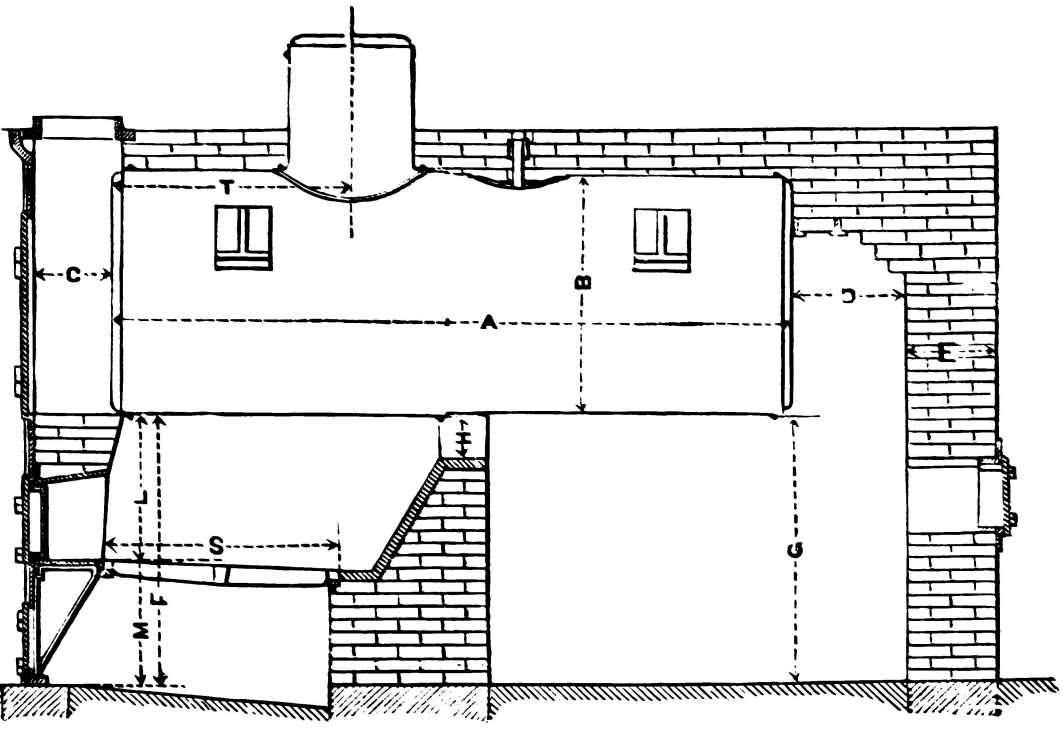

Fig. 3281.

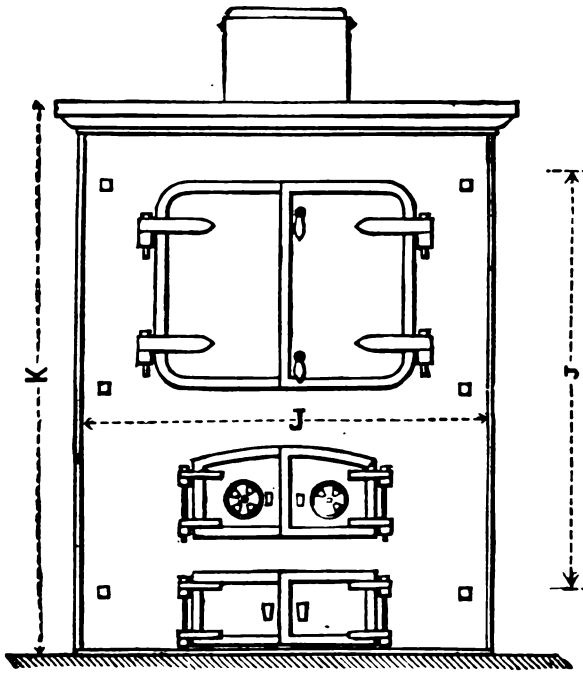

Fig. 3282.

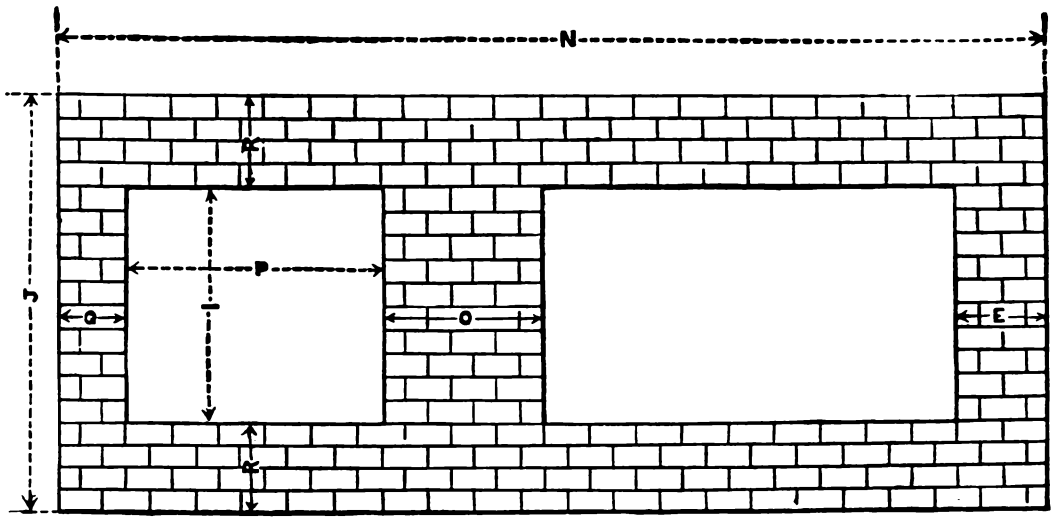

Fig. 3283.

Fig. 3280 is an end view of the setting with the brickwork in section.

Fig. 3281 side view of the boiler and setting.

Fig. 3282 a front end view of the boiler, and Fig. 3283 a ground plan of the brickwork. When the front plate of the boiler setting extends above the middle of the boiler, as in Fig. 3279, it is said to have a "full arch front." Whereas when this plate or casting extends to the middle only of the boiler, it is said to have a half arch front.

Figs. 3284, 3285, 3286, and 3287 show the setting for a half arch front boiler, the dimensions of the settings of both these boilers being given in the following tables:

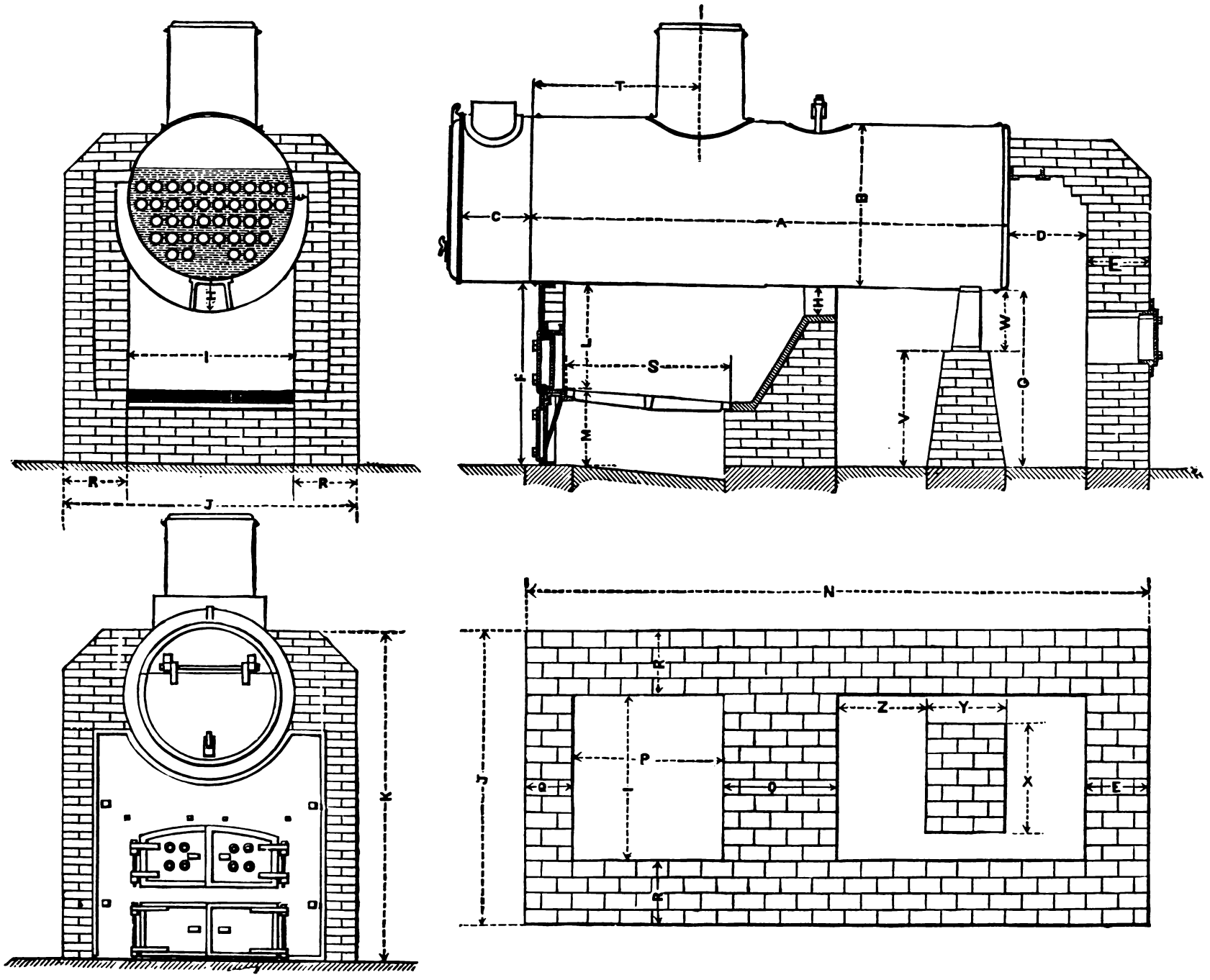

Figs. 3284, 3285, 3286, 3287.

MEASUREMENTS FOR SETTING TUBULAR STATIONARY BOILERS WITH FULL ARCH FRONTS.

REFERENCE LETTERS ON DIAGRAMS.

No.	A	B	C	D	E	F	G	H	I	J	K	L	M	N	O	P	Q	R	S	T	U	NO. OF FIRE BRICK.	NO. COMMON BRICK ABOVE FLOOR LEVEL.
	Ft.	Ins.	Ins.	Ins.	Ins.	Ins.	Ins.	Ins.	Ins.	Ins.	Ins.	Ins.	Ins.	Ft. Ins.	Ins.	Ins.	Ins.	Ins.	Ins.	Ins.	Ins.		
1	7	32	12	20	16	45	44	7	32	64	85	26	19	11–6	20	40	12	16	36	34	4	600	6800
2	7	34	12	20	16	48	47	8	34	66	90	26	22	11–6	20	40	12	16	36	34	4	600	7500
3	8	36	12	20	16	48	47	8	36	68	92	26	22	12–6	24	40	12	16	36	34	4	650	7700
3½	10	36	12	20	16	48	47	8	36	68	92	26	22	14–6	28	46	12	16	42	42	4	720	8500
4	8	42	14	20	16	48	47	8	42	74	98	27	21	12–8	24	40	12	16	36	34	4	730	8500
5	10	42	14	20	16	48	47	8	42	74	98	27	21	14–8	28	46	12	16	42	42	4	770	9600
6	10	44	14	24	16	48	47	10	44	76	100	27	21	15–0	28	46	12	16	42	42	4	880	10500
7	12	44	14	24	16	48	46½	10	44	76	100	27	21	17–0	32	52	12	16	48	49	4	940	10800
7½	14	44	14	24	16	47	45½	10	44	76	99	26	21	19–0	36	58	12	16	54	84	4	1120	11500
8	12	48	16	24	16	47	45½	10	48	88	103	26	21	17–2	32	52	12	20	48	49	4	1120	13600
9	14	48	16	24	16	47	45½	10	48	88	103	26	21	19–2	36	58	12	20	54	84	4	1140	15700
10	12	54	16	24	20	50	48½	10	54	94	112	26	24	17–6	32	52	12	20	48	49	4	1160	16200
10½	15	54	16	24	20	50	48½	10	54	94	112	26	24	20–8	36	56	16	20	54	90	4	1270	17500
11	12	60	18	24	20	50	48½	12	60	108	118	26	24	17–10	32	50	16	24	48	49	4	1400	20500
12	14	60	18	24	20	50	48½	12	60	108	118	26	24	19–10	36	56	16	24	54	84	4	1500	23000
13	16	60	18	26	20	50	48	12	60	108	118	26	24	22–0	40	56	16	24	54	96	4	1540	25300
14	15	66	18	28	20	50	48½	12	66	114	124	26	24	21–2	36	56	16	24	54	90	4	1590	26000
15	16	66	18	28	20	50	48	12	66	114	124	26	24	22–2	40	56	16	24	54	96	4	1620	27000
16	16	72	20	30	20	50	48	12	72	120	130	26	24	22–6	40	56	16	24	54	96	4	1750	30000

NOTE.—In setting "Standard" boilers, the side walls should be so built that the longitudinal seams of the shell will be protected from the fire.

MEASUREMENTS FOR SETTING TUBULAR STATIONARY BOILERS WITH HALF ARCH FRONTS.

REFERENCE LETTERS ON DIAGRAMS.

No.	A	B	C	D	E	F	G	H	I	J	K	L	M	N	O	P	Q	R	S	T	U	V	W	X	Y	Z	NO. OF FIRE BRICK.	NO. OF COM. BRICK ABOVE FLOOR LEVEL.
	Ft.	Ins.	Ins.	Ins.	Ins.	Ins.	Ins.	Ins.	Ins.	Ins.	Ins.	Ins.	Ins.	Ft. Ins.	Ins.	Ins.	Ins.	Ins.	Ins.	Ins	Ins.	Ins.	Ins.	Ins.	Ins.	Ins.		
1	7	32	14	20	16	46	45	7	32	64	73	26	20	10–3	20	33	12	16	36	34	4	36	9	24	12	7	600	6150
2	7	34	14	20	16	46	45	8	34	66	75	26	20	10–3	20	33	12	16	36	34	4	36	9	28	12	7	600	6200
3	8	36	14	20	16	46	45	8	36	68	77	26	20	11–3	24	33	12	16	36	34	4	36	9	28	12	15	650	6700
3½	10	36	14	20	16	46	45	8	36	68	77	26	20	13–3	28	39	12	16	42	42	4	36	9	28	12	25	720	7050
4	8	42	18	20	16	46	45	8	42	74	83	27	19	11–3	24	32½	12	16	36	34	4	32¾	12¼	32	16	11	730	7700
5	10	42	18	20	16	46	45	8	42	74	83	27	19	13–3	28	38½	12	16	42	42	4	32¾	12¼	32	16	25	770	8700
6	10	44	18	24	16	46	45	10	44	76	85	27	19	13–7	28	38½	12	16	42	42	4	32¾	12¼	36	16	25	880	8800
7	12	44	18	24	16	46	44½	10	44	76	85	27	19	15–7	32	44½	12	16	48	49	4	32¼	12¼	36	20	35	940	9300
7½	14	44	18	24	16	46	44½	10	44	76	85	27	19	17–7	36	50½	12	16	54	84	4	32¼	12¼	36	24	45	1120	9500
8	12	48	19	24	16	50	48½	10	48	88	93	26	24	15–7	32	48	12	20	48	49	4	36¼	12¼	36	20	35	1120	11100
9	14	48	19	24	16	50	48½	10	48	88	93	26	24	17–7	36	54	12	20	54	84	4	36¼	12¼	36	24	45	1140	12900
10	12	54	19	24	20	50	48½	10	54	94	99	26	24	15–11	32	48½	12	20	48	49	4	34	14½	42	20	35	1160	13200
10½	15	54	19	24	20	50	48½	10	54	94	99	26	24	19–1	36	52½	16	20	54	90	4	34	14½	42	24	57	1270	14200
11	12	60	21	24	20	46¾	45½	12	60	108	101¾	26	20¾	16–1	32	47	16	24	48	49	4	31	14½	48	20	37	1400	16700
12	14	60	21	24	20	46¾	45	12	60	108	101¾	26	20¾	18–1	36	53	16	24	54	84	4	30½	14½	48	24	45	1500	19200
13	16	60	21	26	20	46¾	45	12	60	108	101¾	26	20¾	20–3	40	53	16	24	54	96	4	30½	14½	48	24	65	1540	21500
14	15	66	24	28	20	47	45½	12	66	114	108	26	21	19–5	36	52½	16	24	54	90	4	31	14½	54	24	57	1590	22100
15	16	66	24	28	20	47	45½	12	66	114	108	26	21	20–5	40	52½	16	24	54	96	4	31	14½	54	24	65	1620	23100
16	16	72	24	30	20	48	46½	12	72	120	115	28¼	19¾	20–7	40	52½	16	24	54	96	4	27½	19	54	24	65	1750	26000

NOTE.—In setting "Standard" boilers, the side walls should be so built that the longitudinal seams of the shell will be protected from the fire

THE EVAPORATIVE EFFICIENCIES OF BOILERS.

*"Many tests have been undertaken to ascertain the evaporative power of different classes of boilers in actual work; but few of these are of any value, owing to the unreliable means usually employed to measure the quantity of water evaporated. The easiest method, and consequently the one most frequently adopted, is to measure the quantity by the difference of its height in the water-gauge glass at the beginning and end of the trial, and also at intermediate stages. This method is very rude and uncertain, since there can be little doubt that in many boilers at work the surface of the water is not level, but is usually higher over the furnace, or where the greatest ebullition occurs. The difference in height at any moment will greatly depend upon the intensity of the ebullition, which is ever varying during the intervals between firing. With mechanical firing the difference of height is probably reduced to a minimum.

"The meters employed for measuring the water are sometimes not trustworthy. The only sure method of ascertaining the quantity of water evaporated is by actual measurement with a cistern or vessel whose cubic contents are accurately known. The quantity of water in the boiler before and after the trial should be measured at the same temperature, which should not exceed 212° to insure accuracy. But even when the amount of water introduced and the quantity passed off from the boiler are accurately ascertained, there yet remains a doubt as to how much has been actually evaporated, and how much may have passed off in priming, unless the trial has been conducted with the boiler open to the atmosphere, which appears to be the only condition under which accuracy can be insured, unless a suitable apparatus can be provided for accurately measuring the weight and temperature of all the steam and water given off, when the boiler is working above atmospheric pressure.

"There are very few boilers that do not prime more or less, and the quantity of water passed off in this manner is sometimes very considerable, and has led to the impossible results of 16 and 17 lbs. of water evaporated per lb. of ordinary coal in locomotive and water-tube boilers being seriously recorded. Externally fired boilers, that have given the moderate result of 5 lbs. of water per

* From "*A Treatise on Steam Boilers*," by Robert Wilson.

lb. of coal at atmospheric pressure, have shown the unexpected result of 10 and 12 lbs. of water evaporated at 40 lbs. pressure. In fact, unless the amount of water passed over with the steam by priming or foaming, when working under pressure, can be accurately ascertained, the evaporative results are not to be relied upon, however careful in other respects the trial may have been conducted. It is customary to give the quantity of water evaporated from and at a temperature of 212°, or the boiling point at atmospheric pressure, to which the results of evaporation are reduced."

The quantity corresponding to any temperature of feed water and working pressure can readily be found with the aid of the annexed table, taken from *The Encyclopædia Britannica*, wherein are presented the relations of the properties of steam, as now accepted by the best authorities.

TABLE GIVING THE PRESSURE, TEMPERATURE, AND VOLUME OF STEAM.

Total pressure per square inch measured from a vacuum. lbs.	Gauge pressure or pressure above atmosphere. lbs.	Sensible temperature in Fahrenheit degrees.	Total heat in degrees from zero of Fahrenheit.	Weight of one cubic foot of steam. lbs.	Relative volume of steam compared with the water from which it was evaporated.
1	—	102.1	1144.5	.0030	20582
2	—	126.3	1151.7	.0058	10721
3	—	141.6	1156.6	.0085	7322
4	—	153.1	1160.1	.0112	5583
5	—	162.3	1162.9	.0138	4527
6	—	170.2	1165.3	.0163	3813
7	—	176.9	1167.3	.0189	3298
8	—	182.9	1169.2	.0214	2909
9	—	188.3	1170.8	.0239	2604
10	—	193.3	1172.3	.0264	2358
11	—	197.8	1173.7	.0289	2157
12	—	202.0	1175.0	.0314	1986
13	—	205.9	1176.2	.0338	1842
14	—	209.6	1177.3	.0362	1720
14.7	0	212.0	1178.1	.0380	1642
15	.3	213.1	1178.4	.0387	1610
16	1.3	216.3	1179.4	.0411	1515
17	2.3	219.6	1180.3	.0435	1431
18	3.3	222.4	1181.2	.0459	1357
19	4.3	225.3	1182.1	.0483	1290
20	5.3	228.0	1182.9	.0507	1229
21	6.3	230.6	1183.7	.0531	1174
22	7.3	233.1	1184.5	.0555	1123
23	8.3	235.3	1185.2	.0580	1075
24	9.3	237.8	1185.9	.0601	1036
25	10.3	240.1	1186.6	.0625	996
26	11.3	242.3	1187.3	.0650	958
27	12.3	244.4	1187.8	.0673	926
28	13.3	246.4	1188.4	.0696	895
29	14.3	248.4	1189.1	.0719	866
30	15.3	250.4	1189.8	.0743	838
31	16.3	225.2	1190.4	.0766	813
32	17.3	254.1	1190.9	.0779	789
33	18.3	255.9	1191.5	.0812	767
34	19.3	257.6	1192.0	.0835	746
35	20.3	259.3	1192.5	.0858	726
36	21.3	260.9	1193.0	.0881	707
37	22.3	262.6	1193.5	.0905	688
38	23.3	264.2	1194.0	.0929	671
39	24.3	265.8	1194.5	.0952	655
40	25.3	267.3	1194.9	.0974	640
41	26.3	268.7	1195.4	.0996	625
42	27.3	270.2	1195.8	.1020	611
43	28.3	271.6	1196.2	.1042	598
44	29.3	273.0	1196.6	.1065	595
45	30.3	274.4	1197.1	.1089	572
46	31.3	275.8	1197.5	.1111	561
47	32.3	277.1	1197.9	.1133	550
48	33.3	278.4	1198.3	.1156	539
49	34.3	279.7	1198.7	.1179	529
50	35.3	281.0	1199.1	.1202	518
51	36.3	282.3	1199.5	.1224	509
52	37.3	283.5	1199.9	.1246	500
53	38.3	284.7	1200.3	.1269	491
54	39.3	285.9	1200.6	.1291	482
55	40.3	287.1	1201.0	.1314	474
56	41.3	288.2	1201.3	.1336	466
57	42.3	289.3	1201.7	.1364	458
58	43.3	290.4	1202.0	.1380	451
59	44.3	291.6	1202.4	.1403	444
60	45.3	292.7	1202.7	.1425	437
61	46.3	293.8	1203.1	.1447	403
62	47.3	294.8	1203.4	.1469	424
63	48.3	295.9	1203.7	.1493	417
64	49.3	296.9	1204.0	.1516	411
65	50.3	298.0	1204.3	.1538	405
66	51.3	299.0	1204.6	.1560	399
67	52.3	300.0	1204.9	.1583	393
68	53.3	300.9	1205.2	.1605	388
69	54.3	301.9	1205.5	.1627	383
70	55.3	302.9	1205.8	.1648	378
71	56.3	303.9	1206.1	.1670	373
72	57.3	304.8	1206.3	.1692	368
73	58.3	305.7	1206.6	.1714	363
74	59.3	306.6	1206.9	.1736	359
75	60.3	307.5	1207.2	.1759	353
76	61.3	308.4	1207.4	.1782	349
77	62.3	309.3	1207.7	.1804	345
78	63.3	310.2	1208.0	.1826	341
79	64.3	311.1	1208.3	.1848	337
80	65.3	312.0	1208.5	.1869	333
81	66.3	312.8	1208.8	.1891	329
82	67.3	313.6	1209.1	.1913	325
83	68.3	314.5	1209.4	.1935	321
84	69.3	315.3	1209.6	.1957	318
85	70.3	316.1	1209.9	.1980	314
86	71.3	316.9	1210.1	.2002	311
87	72.3	317.8	1210.4	.2024	308
88	73.3	318.6	1210.6	.2044	305
89	74.3	319.4	1210.9	.2067	301
90	75.3	320.2	1211.1	.2089	298
91	76.3	321.0	1211.3	.2111	295
92	77.3	321.7	1211.5	.2133	292
93	78.3	322.5	1211.8	.2155	289
94	79.3	323.3	1212.0	.2176	286
95	80.3	324.1	1212.3	.2198	283
96	81.3	324.8	1212.5	.2219	281
97	82.3	325.6	1212.8	.2241	278
98	83.3	326.3	1213.0	.2263	275
99	84.3	327.1	1213.2	.2285	272
100	85.3	327.9	1213.4	.2307	270
101	86.3	328.5	1213.6	.2329	267
102	87.3	329.1	1213.8	.2351	265
103	88.3	329.9	1214.0	.2373	262
104	89.3	330.6	1214.2	.2393	260
105	90.3	331.3	1214.4	.2414	257
106	91.3	331.9	1214.6	.2435	255
107	92.3	332.6	1214.8	.2456	253
108	93.3	333.3	1215.0	.2477	251
109	94.3	334.0	1215.3	.2499	249
110	95.3	334.6	1215.5	.2521	247
111	96.3	335.3	1215.7	.2543	245
112	97.3	336.0	1215.9	.2564	243
113	98.3	336.7	1216.1	.2586	241
114	99.3	337.4	1216.3	.2607	239
115	100.3	338.0	1216.5	.2628	237
116	101.3	338.6	1216.7	.2649	235
117	102.3	339.3	1216.9	.2674	233
118	103.3	339.9	1217.1	.2696	231
119	104.3	340.5	1217.3	.2738	229
120	105.3	341.1	1217.4	.2759	227
121	106.3	341.8	1217.6	.2780	225
122	107.3	342.4	1217.8	.2801	224
123	108.3	343.0	1218.0	.2822	222
124	109.3	343.6	1218.2	.2845	221
125	110.3	344.2	1218.4	.2867	219
126	111.3	344.8	1218.6	.2889	217
127	112.3	345.4	1218.8	.2911	215
128	113.3	346.0	1218.9	.2933	214
129	114.3	346.6	1219.1	.2955	212
130	115.3	347.2	1219.3	.2977	211
131	116.3	347.8	1219.5	.2999	209
132	117.3	348.3	1219.6	.3020	208
133	118.3	348.9	1219.8	.3040	206
134	119.3	349.5	1220.0	.3060	205
135	120.3	350.1	1220.2	.3080	203
136	121.3	350.6	1220.3	.3101	202
137	122.3	351.2	1220.5	.3121	200
138	123.3	351.8	1220.7	.3142	199
139	124.3	352.4	1220.9	.3162	198
140	125.3	352.9	1221.0	.3184	197
141	126.3	353.5	1221.2	.3206	195
142	127.3	354.0	1221.4	.3228	194
143	128.3	354.5	1221.6	.3250	193
144	129.3	355.0	1221.7	.3273	192
145	130.3	355.6	1221.9	.3294	190

Total pressure per square inch measured from a vacuum. lbs.	Gauge pressure or pressure above atmosphere. lbs.	Sensible temperature in Fahrenheit degrees.	Total heat in degrees from zero of Fahrenheit.	Weight of one cubic foot of steam. lbs.	Relative volume of steam compared with the water from which it was evaporated.
146	131.3	356.1	1222.0	.3315	189
147	132.3	356.7	1222.2	.3336	188
148	133.3	357.2	1222.3	.3357	187
149	134.3	357.8	1222.5	.3377	186
150	135.3	358.3	1222.7	.3397	184
155	140.3	361.0	1223.5	.3500	179
160	145.3	363.4	1224.2	.3607	174
165	150.3	366.0	1224.9	.3714	169
170	155.3	368.2	1225.7	.3821	164
175	160.3	370.8	1226.4	.3928	159
180	165.3	372.9	1227.1	.4035	155
185	170.3	375.3	1227.8	.4142	151
190	175.3	377.5	1228.5	.4250	148
195	180.3	379.7	1229.2	.4357	144
200	185.3	381.7	1229.8	.4464	141
210	195.3	386.0	1231.1	.4668	135
220	205.3	389.9	1232.3	.4872	129
230	215.3	393.8	1233.5	.5072	123
240	225.3	397.5	1234.6	.5270	119
250	235.3	401.1	1235.7	.5471	114
260	245.3	404.5	1236.8	.5670	110
270	255.3	407.9	1237.8	.5871	106
280	265.3	411.2	1238.8	.6070	102
290	275.3	414.4	1239.8	.6268	99
300	285.3	417.5	1240.7	.6469	96

Here we see that at 212° the total quantity of heat in the steam is 1178.1°, which gives a difference of 966.1°. This heat, usually termed latent, is absorbed in performing the work of expanding the particles of water from the liquid to the gaseous state. Now, suppose the water is evaporated at 60 lbs. pressure, the steam will have a temperature of 307°, and a total heat of 1207°. If the feed has been introduced at 60°, it is evident that 1147° of heat have been imparted. As the amount evaporated is inversely proportional to the quantity of heat required, we have $1147 \div 966 = 1.2$. Multiplying by this factor, the quantity evaporated at 60 lbs. pressure from 60°, we obtain the amount that would be evaporated at 212° by the same quantity of fuel.

By the same table can be ascertained the comparatively small increase of heat required to evaporate water at higher pressures. Suppose we take water evaporated at 45 lbs. pressure from a feed temperature of 60°, then each lb. of water will require $1202.7 - 60 = 1142.7°$ for its conversion into steam. If we take the pressure at 100 lbs., we shall have $1216.9 - 60 = 1156.9°$ as the quantity required. The difference between these two total quantities is only 14.2°, and is so small as to be scarcely worth considering. Leaving out of account the loss due to the slight reduction of the conducting power of the material, the increased amount of heat required for the higher pressure will be only $\frac{1}{80}$ of the total heat required at 60 lbs. With an evaporation of 7 lbs. of water from 1 lb. of coal, it will be obtained by using $\frac{1}{363}$ more fuel, or about 1 lb. in about 556 lbs., a quantity not appreciable to the ordinary modes of weighing coal. The economy is then manifest of using steam of high pressures when at the same time advantage is taken of the facilities it offers for working the steam more expansively to the engine cylinders.

The saving that may be effected by heating the feed water may be shown as follows:

If we take the normal temperature of the feed water at 60°, the temperature of the heated water at 212°, and the boiler pressure at 20 lbs., the total heat imparted to the steam in one case is

$$1192.5° - 60° = 1132.5°$$

and in the other case $1192.5° - 212° = 980.5°$

the difference being 152°, or a saving of $\frac{152°}{1132.5°}$

which is 13.4 per cent. If the pressure be taken at 120 lbs., instead of 20 lbs., the saving will be 13.1 per cent. showing a slight diminution in the economy effected by heating the feed water when a high boiler pressure is employed.

THE CARE AND MANAGEMENT OF STATIONARY ENGINE BOILERS.

The first thing to do in taking charge of a stationary engine boiler is to know from personal inspection that the safety fittings and the boiler-feeding apparatus are in good order.

The safety valve is the first thing to inspect, as it is liable to stick in its seat, especially in cases in which it is set at a greater pressure than is got up in the boiler, because in that case it is not lifted from the seat and in time sticks fast there.

In such cases it is proper to lift the valve at least once a day while steam is on. For this purpose a cord may be attached to the lever, passing over a pulley directly above the lever, and thence to some convenient place near the boiler, but where it is not liable to get caught and pulled accidentally.

Before lighting the fire, see that there is sufficient water in the boiler. If there is a gauge glass on the boiler, it should show three-quarters full, or three-quarters of a glass, as it is called.

The gauge glass may show a false water level, and to be sure that such is not the case, open the top gauge cock and the cock at the bottom of the gauge glass, letting the water run through the gauge glass. Open and close the cock below the gauge glass two or three times to see that the water comes to the same level each time.

If the steam pressure has been allowed to fall in the boiler without any of the cocks being opened, there will be a partial vacuum in the boiler, and air must be let in before the true water level will be shown either by the gauge glass or by the gauge cocks.

Opening the upper gauge cock will let in the air, and it should not be closed again until enough steam has been got up in the boiler to expel the air again, or in other words, until steam begins to issue from it.

The grate bars and ash pit should be cleaned of clinker, ashes, etc., and it should be seen that the tubes are clear of ashes, etc., before the fire is laid; if the grate is a shaking one, the lever should be applied to see that the grate will shake properly.

TO LIGHT THE FIRE.—In the case of anthracite or hard coal, as it is sometimes termed, first cover the bars with a thin layer of coal and then put in pieces of lighted greasy waste (if it is at hand) distributed about the furnace, taking especial care to light the fire at the fire-door end and in the corners, because the fire will spread from the front end towards the back easier than it will from the back end towards the front.

The fire should light from the bottom and not from the top, hence the thinnest pieces of the wood should be put in first.

If there is any soft coal at hand, a small quantity of it will accelerate lighting the fire, as it burns easier and quicker than hard coal.

Before putting on the coal the wood should be well lighted, the bottom portion of it having ceased flaming.

This causes the lighted wood to spread over the bars and the fire to light evenly.

Charge the coal lightly, first covering the places that have burned up the most.

FIRING.—The fire door should be kept open as little as possible, as it admits cold air that is detrimental to the combustion, as well as to the draught, hence firing should be done quickly.

A good fireman will maintain as even a temperature as possible in the fire box by charging the coal lightly and quickly.

Some firemen will, after the fire is at its proper depth all over the grates, charge the fire in the front end, that is, at the fire-door end, and push it back as it burns up, to keep up the thickness of the fire at the back.

The thickness of the fire depends upon the size and kind of coal.

With small coal a fire from 4 to 6 inches deep will answer, while, if the lumps are five or six inches in diameter, a fire from a foot to 15 inches deep may be maintained, as is done in some locomotives.

The object is to have the fire thick enough to prevent it from burning through in spots or letting cold draughts of air pass through it.

The sides of the furnace require particular attention, not only because cold air is more likely to get through there, but also in boil-

ers having fire boxes the cool sides of the box keep the temperature of the fuel down, hence a thicker fire is necessary around the sides than in the middle of the furnace or fire box.

Three things are to be considered in cleaning a fire—first, that the boiler pressure will fall during, and for a short time after, the cleaning; second, that the depth of fire will be diminished by the cleaning; and third, that the temperature of the fire will fall during the cleaning.

SHAKING GRATE BARS.

When a furnace has shaking grate bars, the cleaning of the fire is greatly facilitated, and with bars that shake singly (and good coal) the fire is often not disturbed during the day, except to shake the bars occasionally, passing the poker through it and using the hoe to keep it evenly spread.

If the grate shakes in sections, more cleaning will be required to

Fig. 3288.

break up the clinker, while, if the bars do not shake, the cleaning assumes greater importance.

Before cleaning, therefore, see that there is sufficient water in the boiler, that it need not be fed while cleaning, nor just after cleaning the fire.

Prepare for cleaning by having a thick fire on the grate, so that after cleaning it will burn up quickly, and let the cleaning be done as quickly as possible.

The tools used for cleaning the fire are the slice bar, Fig. 3288,

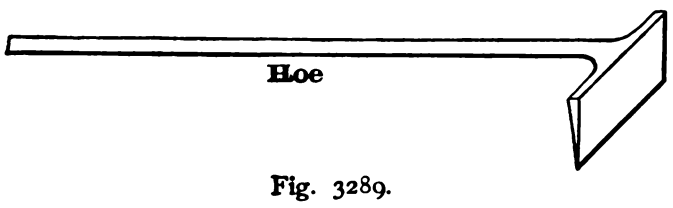

Fig. 3289.

which is pushed along the top of the fire bars to loosen up the fire, and let the ashes fall through the bars.

The hoe, Fig. 3289, which is used to push the fire to the back of the furnace and to pull it forward. The poker, Fig. 3290, which dislodges any clinker that may be between the bars, and lets the ashes fall through.

The clinker hook or devil's claw, Fig. 3291, which is used to haul clinker out of the fire, and the rake, Fig. 3292, which is used to spread the fire evenly over the bars after it is cleaned.

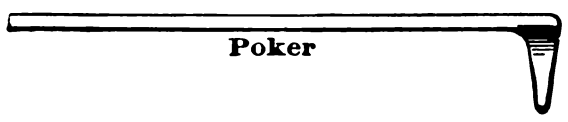

Fig. 3290.

In cleaning a fire, first use the slice bar to loosen up the fire and let the ashes fall through, and also dislodge clinkers from the surface of the bars. Then push the fire to the back of the furnace. Next use the poker to clean out clinker from between the exposed part of the bars. Then with the hoe pull a part of the fire forward and pull out the clinker that may be in this part, doing so with the hoe as far as possible, as that will save time, but if it should be necessary, use the clinker hook.

Then pull forward a second portion of the fire, and spread it on the bars, removing the clinker as before. When all the fire has thus been cleaned, use the rake to spread it evenly over the bars, and put on a light charge of coal, covering the brightest parts of the fire first, and taking care that no part of the fire bars is left uncovered.

The cleaning should be done quickly.

DRAUGHT.—The draught should be decreased while the fire is being cleaned, but the damper should never be entirely closed, as this might cause an explosion in the fire box and tubes.

During a temporary interruption, as in the case of the engine stopping, partly close all the dampers, as it is wasteful to make steam and blow it off through the safety valve.

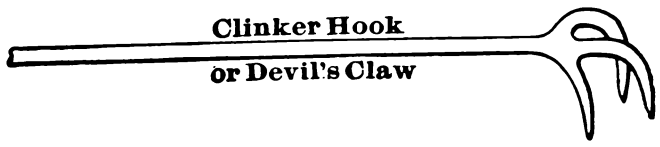

Fig. 3291.

COMBUSTION.—A blue flame is evidence of incomplete combustion, but there may be a blue flame and imperfect combustion at the back end of the furnace, and a white flame and perfect combustion at the other end.

This is likely to occur with heavy firing near the fire door, and a thin fire at the tube sheet end of the fire box. In this case the unconsumed gases produced near the fire door (as evidenced by the blue flame) are consumed in passing over the bright fire at the tube plate end of the furnace.

AT NIGHT.—Always leave plenty of water in the boiler when leaving it for the night, not only to allow for any leak, but also because it gives a fair start in the morning and more time to remedy any defect in the feed pump if it arise.

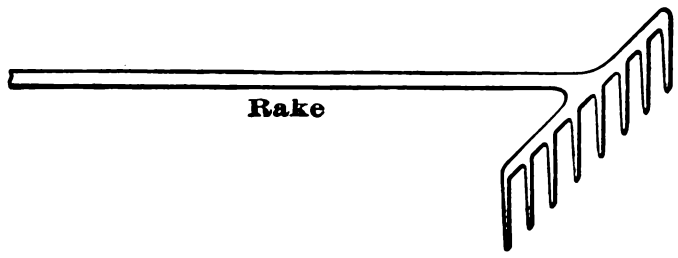

Fig. 3292.

By plenty of water, very nearly a full gauge is meant, or if there is no gauge glass to the boiler, let the water stand above the second or middle cock.

The usual method of leaving the fire for the night is to bank it. There is an element of danger, however, in banking a fire, unless it is done to suit the circumstances, because steam may generate very rapidly, and perhaps more rapidly than the safety valve can carry it off.

A safe method is to clean the fire, leaving the clinker and ashes covering the front half of the grate and the fire piled up on the back half.

The damper and ash pit door should be closed tight, the fire door open, and the fire well covered with fresh coal, choosing small rather than large coal.

If this method is found not to keep up the fire sufficiently, the same plan may be employed, except that the ashes and clinker may be removed, and if this still leaves too cold a boiler, and too poor a fire in the morning, the fire may be left spread over the grate, but heavily covered with fresh coal, the draught being stopped as much as possible by closing the dampers and opening the furnace door.

To further insure safety, the weight on the safety valve lever should be pushed towards the valve, so as to cause the safety valve to blow off at a less pressure than during the day.

IN THE MORNING.—In starting up a banked fire in the morning, first close the fire door and open the damper, so as to give the fire all the draught possible, and let it burn up a little; then, if it has been piled up at the back of the furnace, clean out the ashes by passing the T bar beneath the fire, and spread it over the grate, letting it burn up a little before making up a fire.

BOILER-FEED.—The fireman should endeavor, if possible, to so regulate the boiler feed that it is kept going as nearly continuously as possible while maintaining a uniform quantity of water in the boiler, and this, with uniform firing, will give the greatest economy.

When pumps are used to feed with, the amount of the lift of the valves can be regulated by a screw, so as to vary the amount of

water the pump will deliver, and in this case it is comparatively easy to set them so that the pump may be kept going without putting too much water in the boiler.

When injectors are used, however, the feed will be intermittent, and a uniform quantity of water in the boiler is best obtained by feeding at short intervals, stopping the feed when the fire door is opened much, as when cleaning the fire.

If the feed water is dirty, the gauge glass should be kept clean by first shutting off the upper cock and opening the lower one, so as to let the water blow through the lower cock, and then shutting off the lower cock from the boiler, and opening the upper one, which will let the steam blow all the water out of the glass. This should be done two or three times a day, so as to keep the holes in the boiler and those in the cocks from closing up with fur or scale.

If the water falls in the glass, or if the gauge cocks show the water to be falling, notwithstanding that the feed pump has been started, it is evident that the pump is not working.

This may occur from a stuck valve, a leak in the suction pipe, from the feed water being too hot, or from the pump failing to start in action from leaky or choked valves.

A stuck valve may generally be relieved by striking a few blows on the outside of the pump with a hammer and a block of wood, or if this does not answer, with the hammer only. Check valves are the ones most likely to stick.

If a pump fails to work by reason of the feed water being too hot, the remedy is to open the pet cock to let the steam out of the pump, but if this does not succeed, cold water may be poured on the outside of the pump, which will start it, after which, in most cases, the pump will keep going and the pet cock may be closed.

If the suction pipe has a joint, a leak there will impair the action of the pump, and, if the leak is great enough, will stop it; the remedy is to make the joint tight.

Plunger pumps sometimes fail to act because the plunger has worn so small in diameter that there is sufficient air between the plunger and the pump barrel to expand and compress without lifting the valve; the remedy is obviously a new plunger of as large diameter as the pump gland will admit of, boring the gland out to admit the new plunger.

All the impurities in the water are left in the boiler when the water has evaporated, and it is obvious these impurities must be blown off or they will form scale on the internal surface of the boiler and the external surface of the tubes or flues.

This scale obstructs the passage of the heat from the iron to the water, and if let get thick enough will cause the iron to rapidly burn out.

To prevent the formation of scale, two principal methods are employed, one being to purify the feed water, and the other to occasionally blow the impurities out of the boiler.

Feed-water heaters generally serve also as purifiers, and their effectiveness is increased in proportion as the water can pass quietly through them, and has a large area on which the impurities can settle. Horizontal heaters have the advantage that they have a large settling area, and a less distance for the impurities to fall through. The water-gauge glass and the lower gauge cock are usually set so as to have a margin of about three inches of water above the tubes or crown sheet of the fire box, hence if it is known that the water is but just below the bottom of the gauge glass or gauge cock, there is no positive danger, although it is improper to let it get so low.

If the water is out of sight, and it is not known exactly how low it is, then it is dangerously low, and every minute is of vital importance.

Should the water get dangerously low in the boiler, the most dangerous thing to do is to lift the safety valve or pump in cold water, especially if it is not known how much water there is in the boiler.

As quickly as possible cover the fire with ashes, coal, earth, sand, or anything that is at hand that will smother the fire, then close the draught to the fire, leaving the fire door and the chimney damper open.

Leave all the steam outlets just as they are, and also the feed.

PRIMING.—Priming, which is also called "foaming," is that the steam carries up water into the steam space. This may arise from several causes, but it is well known that what will stop priming in some cases will cause it in others.

The known causes of priming are—first, too little room for the steam in the boiler, and it follows that a high water level may cause priming; second, it may be caused by a difference of temperature between the water and the steam in the boiler. Suppose, for example, that the pressure of the steam and water in the boiler is 160 lbs. by gauge, and its sensible temperature will be 370 degrees. Suppose then that enough steam is permitted to escape from the boiler to reduce the steam pressure to 140 lbs., and its temperature will be reduced to 361 degrees. But the water will remain at 270 degrees, and the result will be that it will pass into steam so rapidly that it will carry up the water and hold it in suspension among the steam. The water will pass with the steam into the engine cylinder, and the boiler will be said to "prime," "foam," or "work water." The same thing may happen if the water is heated very rapidly.

Priming is wasteful because it rapidly empties the boiler of its water, and dangerous because it may cause the piston to knock out the cylinder head or cover.

When the safety valve blows off, priming may be induced, especially if the engine is at work, because in this case the boiler is being forced, or, in other words, is making steam more rapidly than it is designed to do, and the passage of so large a body of steam through the water is apt to lift it.

Muddy water will sometimes cause foaming or priming, as will also insufficient circulation of the water in the boiler or sometimes the presence of grease or oil.

Priming may be detected from the discharge of water with the steam when the gauge cock is opened, the steam looking white and fluttering as it escapes, and also by violent motion of the water in the gauge glass, or by a thump or pound at the ends of the piston stroke.

To stop priming, the steam from the boiler should be decreased by slackening the speed of the engine, or if necessary, by stopping it. The true water level can then be seen, and if there is too much water in the boiler some of it may be blown off, while if the quantity of water in the boiler will permit it, the feed may be put on.

If the boiler has a surface blow-off cock, or a mechanical boiler cleaner, it is best to blow off from that, as it carries off the scum at the same time as relieving the boiler.

To prevent priming, a steady and uniform rate of boiler feed, the use of pure water, a clean boiler, and steady firing are the best means, turning on the steam slowly so as not to violently disturb the water in the boiler.

The engine as well as the boiler requires attention when the boiler primes. Thus the cylinder cocks should be opened to let out the water from the cylinder and prevent breakage of the cylinder cover.

SCALE IN BOILERS.—The steam leaves behind it all the impurities that the water contained, and these impurities deposit in form of mud and scale, which must be got rid of because it causes a loss of fuel, and if allowed to get thick enough will cause the boiler to burn.

The use of boiler compounds or scale preventatives may be resorted to with advantage, providing they are of a nature to suit the water, but mechanical cleaning must also be resorted to at periods determined by the nature of water.

Boilers are cleaned in two ways—first, by blowing off the impurities before they have formed into scale; and second, by removing at certain intervals whatever scale has formed.

Blowing down may be done in two ways—first, from the surface of the water by means of mechanical cleaners; and second, by blowing out from the bottom of the boiler.

The first draws off the impurities as they are thrown to the surface, the second draws them off after they have become more condensed and sink to the bottom.

How often a boiler should be blown down depends upon the kind of water fed to the boiler; where purifiers are used, less blowing down is obviously needed.

It is best to blow off from the bottom of the boiler when no steam is being used, as during dinner time, letting the water blow down about a quarter of the glass, or from the upper to the middle gauge cock.

As no steam is being used, the feed can then be put on to restore the quantity of water without reducing the temperature of the boiler so much. The feed should be gradual and the fire regulated to keep the steam pressure even.

How often a boiler should be washed out and cleaned depends upon the quality of the water it uses, and varies from about once a week to once a month, according to whether bad and unpurified water or purified water is used.

The first thing to do is to draw the fire, leaving the chimney damper open and closing all the other dampers so that as little cold air as possible can get into the boiler, while the heat can pass away up the chimney.

Let the steam and water all remain in the boiler until there is a gauge pressure of about 5 lbs. in the boiler.

Then open the blow-off cock and let out the water. If the water is blown off under a high pressure, then after the waste is all out the iron is hot enough to dry up the scale, making it hard and very difficult to remove.

After all the water is blown off, take out all the mud plugs and the man-hole and hand-hole covers, and wash out the boiler under as much water pressure as can be had, directing the hose so to reach all parts of the boiler and tubes, and continuing the washing until the water leaves the boiler clean.

Then with a wooden hoe on a piece of gas-pipe of small diameter for a handle, and small enough to pass through the hand-hole, draw all the loose scale to the hand-hole and remove it, letting the water run slowly, so as to carry the small pieces of scale towards the hand-hole as fast as the hoe disturbs it.

Then get inside the boiler, and a few blows with a light ball-pened hammer will loosen the scale, and a steel scraper will remove more, which must be washed down and drawn out with a hoe.

After the cleaning and scaling are complete, the engineer, with lamp in hand, should carefully examine the interior of the boiler and of the fire box, paying especial attention to the stays to see that they are not broken.

The hammer test should also be applied. It consists of sounding the boiler by light blows given by a light ball-pened hand hammer, the sound indicating defective places.

CHAPTER XXXV.—THE STEAM ENGINE.

THE high pressure steam engine, in whatever form it exists, consists of a frame or bed plate carrying two distinct mechanisms, first, the driving or power-transmitting mechanism, and second, the valve gear or valve motion, and to these are added such other mechanisms as the nature of the duty the engine is to perform may require.

The most prominent of these additional mechanisms is a governor for regulating the speed at which the engine is to run; nearly all steam engines require a governor in some form or other, while for electric lighting and some other purposes it constitutes the main feature in the design of the engine.

In a locomotive the air brake and the sand box are elements not found in other engines.

In a jet condensing engine, the condenser and injection water, or condensing water mechanism, is a part of the engine.

In a surface condensing engine, the air pumps and circulating pumps are a part of the engine.

In marine engines there are mechanisms for turning the engine around when no steam is up; for moving the reversing gear quickly, and for varying the point of cut off, and therefore the amount of expansion, and various other and minor mechanisms.

Referring now to the simplest form of high pressure stationary steam engine, such as represented in Figs. 3293, 3294, and 3295, its valve gear or valve motion consists of the eccentric and its strap, the eccentric rod, the valve rod guide A, the valve rod or valve spindle, and the valve *v*, these parts controlling the admission of steam to one side of the piston, and the exhaust from the other.

The piston, piston rod, cross head, connecting rod, crank, crank shaft, main shaft or driving shaft, and the fly wheel constitute the driving or power-transmitting mechanism.

The steam side of the piston is that against which the steam is pressing, as side S in Fig. 3295. The exhaust side, E, of the piston is that on which the steam is passing out or exhausting.

The governor for a common D valve engine regulates the engine speed by varying the opening in the bore of the pipe through which the steam passes from the boiler to the steam chest, leaving a wider opening in proportion as the engine runs slower, and reducing the opening when the engine runs faster. Assuming the engine to be running at its slowest, or its load to be so great that a full supply of steam is required in order to keep the engine up to its proper speed, and the governor will be open at its widest, so that all the further action the governor can have is to reduce the steam pipe opening, and thus cause the pressure in the steam chest to be less than that in the steam pipe.

This action is called wire-drawing the steam, and the governor is called a throttling governor.

An engine bed or bed plate is a frame that is seated or bedded to its foundation along its whole length.

An engine frame is seated to its foundations at two or more places, but not continuously throughout its length.

THE CYLINDER.

Cylinders are secured to the engine frames in three principal ways, as follows: by bolting them down to the bed plate; by bolting them to one end of the bed plate, so that they may expand and contract without springing the bed plate; and in vertical engines, by bolting them to the top of the frames.

The bores of cylinders require to be parallel, so that the piston rings may fit to the bore without requiring to expand and contract in diameter at different parts of the stroke.

Cylinders are designated for size by the diameter of the cylinder bore and the length of the stroke; thus, a 10×12 cylinder has a piston of ten inches diameter and 12 inches stroke.

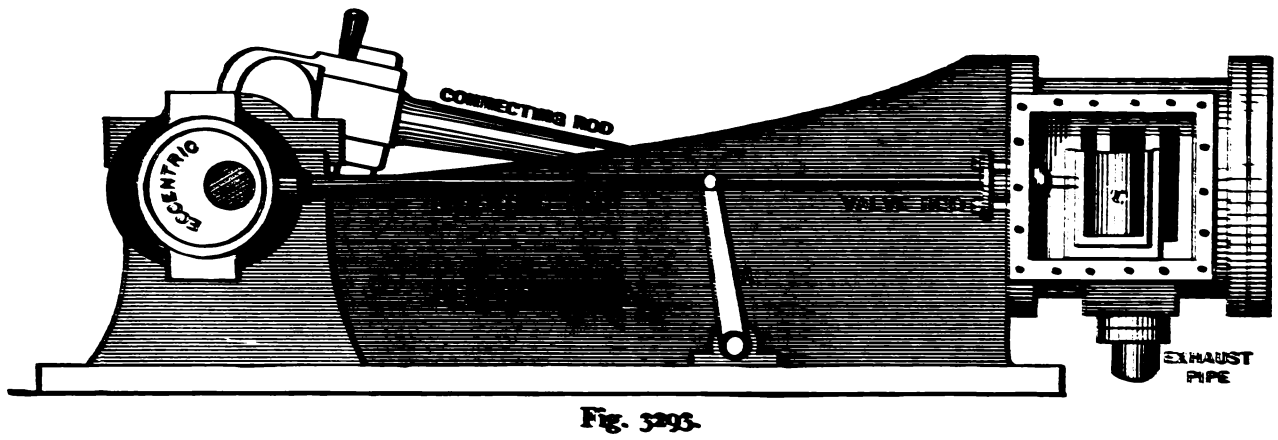

Fig. 3293.

The wear of a cylinder bore is (if the engine is kept in proper line and the piston rings, or packing rings as they are sometimes termed, fit to the bore with an equal pressure throughout the stroke) greatest near the middle of the length and least at the ends of the stroke. But when the piston rings are set out by the steam pressure, and the point of cut off occurs early in the stroke, the wear may be greatest at the ends of the cylinder bore, because of the pressure of the steam diminishing during the expansion.

The counterbore of a cylinder is a short length at each end of the cylinder, that is made of larger diameter than the rest of the bore, so that the piston head may travel completely over the working bore, and thus prevent the formation of a shoulder at each end of the cylinder. Such a shoulder forms when there is a part of the bore over which the piston does not pass. The length of the counterbore should exceed the amount of the taper on the connecting rod key, so that as the connecting rod length alters from the wear, the piston shall not strike the cylinder head.

The clearance of a cylinder is the amount of space that exists between the face of the piston when it is at the end of its stroke and that of the valve when it covers the port, the piston being at the end of the stroke, and as this space exists at each end of the cylinder, the total clearance for a revolution is twice the above amount.

The clearance at the crank end of the cylinder is reduced by the piston rod passing through it.

The amount of clearance may be measured by the following method, which has been given by Professor John E. Sweet:

See that the piston and valves are made tight, and the valves disconnected; arrange to fill the clearance spaces with water through the indicator holes, or holes drilled for the purpose. Turn the engine on the dead centre; make marks on the cross-head and guide that correspond; weigh a pail of water, and from it fill all the clearance space. Weigh the remaining water, so as to determine how much is used. Then weigh out exactly the same amount of water, turn the engine off the centre, pour in the second charge of water, and turn back until the water comes to the same point that it did in the first case. Make another mark on the cross head, and the distance between these marks is exactly what you really wish to know; that is, it is just what piston travel equals the clearance. This gives the proportion that the clearance space bears to the space in the cylinder occupied by the steam at the end of the piston stroke. Thus, if it takes one pound of water to fill this space, and to admit the one pound of water the piston must be moved one inch, then the clearance bears the same relation to the capacity of the engine as one inch bears to the stroke of the piston. Thus, under these circumstances, in an engine of ten-inch stroke, it would be said the engine had ten per cent. clearance.

When a cylinder is to be rebored, the boring bar should be set true or central to the circumference of the counterbore, so that the bore of the cylinder may be brought to its original position with reference to the bore of the stuffing box.

pipe of the engine, the oil being distributed over the surfaces by the steam.

Cylinder oilers sometimes have a pump to force the oil in, and in others the steam in the oiler condenses, and the water thus formed floats the oil over the top of a tube, or up to an orifice through which the oil gradually feeds as the condensation proceeds.

In other oil feeders, the feed is regulated by increasing or diminishing the opening through which the steam passes from the cup to the steam pipe.

Sight oil feeders are those in which there is a glass tube or body, in which the passage of the oil can be seen as it drops.

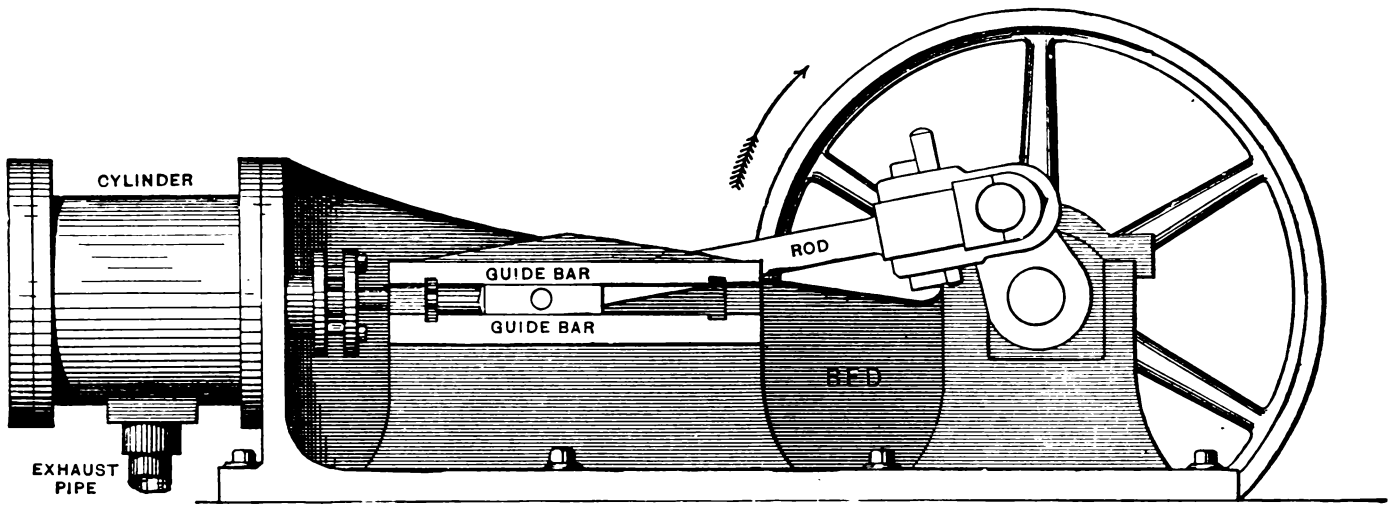

Fig. 3294.

Cylinder cocks are employed at each end of the cylinder to let out the water that condenses from the steam when admitted to a cold or partly cooled cylinder. The two cocks are usually connected together by a rod, so that both may operate together.

Cylinder relief valves are valves at each end of the cylinder to relieve the cylinder from the charges of water that sometimes enter from the boiler with the live steam.

Steam ports give a quicker admission in proportion as their length is increased, and this reduces the amount of valve travel, and are sometimes given a length equal to the diameter of the cylinder bore.

The bottoms of the steam ports are sometimes so placed as to be below the level of the cylinder bore, so as to drain off the water of condensation of the steam.

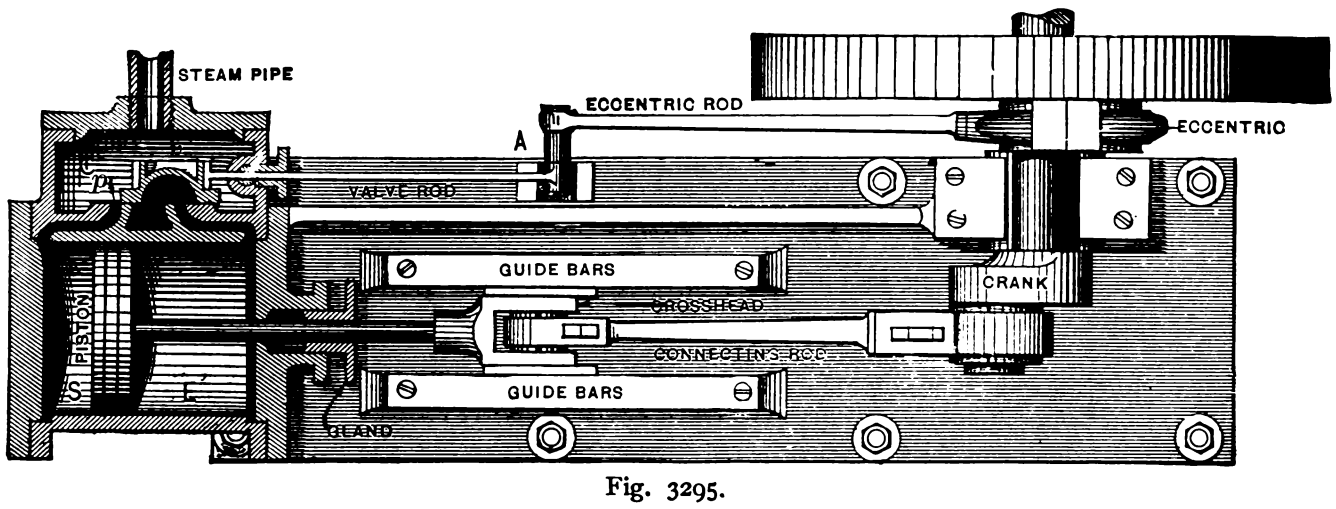

Fig. 3295.

Cylinders require lubricating, both to avoid friction and wear of the cylinder bore, as well as of the valve and valve seat. The amount of lubrication required depends upon the degree of tightness of the piston rings, upon the speed of the piston, upon the amount of pressure of the valve to its seat, and upon the method of operating the side valve.

Cylinders with releasing valve gears require freely lubricating, because the closure of the valve depends upon the dash pot, and undue friction retards the closing motion.

The less the movement of the valve at the moment of its release, the easier it is to move it, because the friction is less, and less lubrication is required.

Cylinders are lubricated by automatic oilers placed on the steam

Rule to find the required area of steam port.

Multiply the area in square inches of the piston, by the number opposite to the given piston speed in the following table:

Speed of piston in feet per minute.	Number by which to multiply the piston area.
100	0.02
200	0.04
300	0.06
400	0.07
500	0.09
600	0.1
700	0.12
800	0.14
900	0.15
1,000	0.17

The cylinder exhaust port must be open when the valve is at the end of its travel, to an amount equal to the width of the steam port, but what this width will be in any given case depends upon the width of the bridges, the amount of the steam lap and the travel of the valve, as will be explained with reference to the slide valve.

Jacketed cylinders are those in which there is a space around the cylinder that is filled with live steam.

The object of jacketing is to prevent the loss of heat from the steam within the cylinder by radiation. The steam in the jacket should be received direct from the boiler, and should not be drawn from the jacket into the steam chest because the jacket reduces its temperature and condenses it.

The water of condensation of a steam jacket should not be allowed to accumulate in any part of the jacket, but should drain off and pass back to the boiler. To render the jacket as effective as possible, it should extend from end to end of the cylinder, the exhaust steam pipe leading directly away, so as to have as little communication with both the cylinder and the jacket as possible.

The jacket should have open communication with the boiler at all times, so as to have the pressure in the jacket at the same pressure as that in the steam chest, while the cylinder being kept hot, it will be unnecessary to blow steam through in order to warm the cylinder when starting the engine. The steam should enter the jacket at the highest point, so as to prevent the accumulation of air in the jacket. Or, if the steam is admitted at some other point, it should be so arranged as to permit its thorough circulation in the jacket. When a jacket is used, the metal of the cylinder body should be as thin as possible, because the transmission of heat through the metal is, both in time and quantity, inversely as the distance or thickness passed through.

The steam in the jacket should be as dry as possible, so that all wet steam admitted during the live steam period may be evaporated by the heat received from the steam in the jacket. The outside of the jacket should be thoroughly protected from cooling by being lagged or clothed with felt or some other material that is a non-conductor of heat.

From experiments made by Mr. Charles A. Smith, of St. Louis, it was found that the amount of variation of temperature that occurred during the stroke in a locomotive cylinder was inversely proportional to the speed of engine revolution, which shows the advantages of jacketing cylinders and of lagging them, as well as the advantage of a high rotative speed.

A lagged cylinder is one clothed, which is sometimes done with wood or metal strips, leaving an air space around the cylinder, while in others this space is filled with felt or some non-conducting material.

Experiments made by Charles E. Emery gave the following general results: The thickness of the pipes and of the non-conducting materials was kept constant.

Hair felt was the best non-conducting material of all those tested, and the value of a thickness of two inches of hair felt was taken as unity and the maximum.

The value of two inches of mineral wool as a non-conductor was 0.832 of hair felt; two inches of mineral wool and tar was 0.715. Two inches of sawdust, 0.68; two inches of a cheaper grade of mineral wool, 0.676; charcoal, 0.632; two inches of pine wood, across the grain, 0.553; two inches of loam, 0.55. This was from the Jersey flats, and almost all vegetable fibre not yet become compact. Slaked lime from the gas works, expressed decimally, with hair felt as unity, 0.48; coal ashes, 0.345; coke, only 0.277, the same as used for fuel; two inches of air space, only 0.136, which dashes a great many people's hopes, and is as interesting as any part of the data; two inches of asbestos, 0.363; two inches of Western coke, about the same as the other coke; two inches of gas house charcoal, 0.47.

These are very interesting, particularly so this matter of an air space. It has been supposed that an air space around a pipe is as good as anything we can have. The fact is, convection or circulation takes place; the air is cooled on one side of the space, descends, and rises on the other, and it is necessary to break up the air space, and that undoubtedly accounts for the efficiency of these different materials. It is the air probably that is the non-conductor; but it should be kept quiescent instead of being allowed to circulate. The air space itself is of very little value until the circulation is prevented.

THE PISTON.

In calculating the power of an engine it is the piston speed that is taken into account, and not the length of the stroke, the latter being used merely in order to obtain the piston speed.

Long strokes are usually employed upon engines running at moderate piston speeds, as from 300 to 500 feet per minute, and short strokes for piston speeds from 400 to 800 feet per minute.

The Porter Allen engine has been run noiselessly at 1,100 feet per minute.

In determining the stroke of an engine the nature of the valve-operating mechanism is taken into account.

In releasing mechanisms, or those in which connection between the eccentric rod and valve spindle is broken in order to permit the valve to close quickly, too high a speed of revolution may cause the tripping mechanism to fail to act, hence a high piston speed is obtained by means of employing a comparatively long stroke.

In positive valve gears, or those in which the valve is controlled throughout the whole of its movement by the eccentric, the valve mechanism may operate quicker without danger of missing, hence the piston speed may be greater.

When the stroke equals the diameter of the cylinder bore, the cylinder presents the least amount of exposed surface in proportion to its cubical contents.

To obtain the same amount of expansion in a short as in a long stroke engine, the steam must be expanded through an equal proportion of the stroke; thus, if the steam is cut off at half stroke in both cases, the amount of this expansion will be equal.

Pistons are made an easy fit to the cylinder bore, a steam-tight fit between the two being obtained by means of the piston rings.

Solid pistons are provided with snap piston rings.

A snap piston ring is one that is larger in diameter than the cylinder bore, and is closed in to get it into the cylinder, while it depends on its own spring outwards for its fit to the cylinder bore, having no supplementary rings or springs to force it out.

Piston rings that are expanded by supplementary springs should be tapering in thickness, the thickest part being opposite to the split, and the thinnest at the split. This causes the ring to conform itself to the cylinder bore, and makes it sit more evenly around its whole circumference. These rings are made larger in diameter than the cylinder bore, in proportion of about $\frac{1}{8}$ inch per foot of diameter, the split being closed when the ring is sprung into place in the cylinder. But if made of brass, the split must be left open enough to allow for the expansion, or otherwise the ring expanding more than the cylinder will seize and cut single.

The split of a piston ring should be placed on the bottom of the piston (in a horizontal engine), so that the piston head, in resting on the cylinder bore, will cover up the opening of the ring.

When two or more rings are employed, the splits may be placed on the lower half of the cylinder, so as to cover up their splits as much as possible.

The follower of a piston is a plate or cover that is employed to hold the piston rings in place, and the piston rings should be so fitted that the follower should be bolted firmly up, or otherwise the bolts may come loose and work out, and getting between the piston and the cylinder cover, may cause the piston to knock the cylinder cover out.

Piston followers are necessary when the rings are set out by springs or other parts adjustable within the piston head. Snap piston rings, however, permit the use of a solid piston, dispensing with the need for a follower.

The effectiveness of a piston ring may be tested, when the construction of the engine will permit it, by disconnecting the valve for the head end, setting it so that it covers the port, and then taking off the cylinder cover at the head end and admitting

steam through the crank end steam port, when any leak in the piston rings will be seen by the escape of the steam.

THE PISTON ROD.

Piston rods should be of slightly diminishing diameter at the ends, so that the wear shall not leave a shoulder at each end of the rod.

In determining the diameter of the piston rod, allowance is made for turning it occasionally in the lathe to restore its parallelism, the wear reducing its diameter more in the middle than at the ends. The diameter of a piston rod is found in practice to range between one-sixth and one-tenth the diameter of the cylinder bore.

Steel piston rods wear better than those of wrought iron, being free from scaly seams which are apt to cut the packing and cause the rod to wear in grooves.

The best method of securing a piston rod to a piston head and to the cross head is by a taper seat and a key, so that no nut is needed, and the cylinder cover need not have a recess to receive the nut when the piston is at the end of the stroke, and the amount of clearance is correspondingly reduced.

Piston head keyways are sometimes given so little clearance that the key completely fills the keyway when driven fully home. This prevents the edges of the keys from bulging into the clearance space in the keyway, which action is apt to cause the key to loosen in time. The key should have a safety pin at its small end.

When piston rods are threaded into the cross head, or into the piston, the threads are made an easy fit, and taper seats or split hubs secured by clamping screws are relied upon to keep the rod true to the cross head or piston, it being found that the screw alone cannot be relied upon for this purpose.

PISTON ROD PACKING.

Piston rod packing, of fibrous or similar material, should be cut in rings that will not quite fully envelop the piston rod, and the first ring should be placed with its split upwards. After two or three rings have been inserted, each having its split at a different part of the bore, so as to "break joints," the gland should be screwed up enough so as to carry the packing home to the back of the stuffing box. This process should be continued until the stuffing box is filled for about two-thirds of its depth, when the gland may be screwed home.

The gland should be screwed up quite evenly, so that the packing in the stuffing box shall be compressed equally all around the rod, and will not cause the gland to bind on the rod or in the stuffing box bore.

The wrench should be applied first to one nut, giving it a turn or two, and then to the other, and after the gland is firmly home the nuts should be eased back about two turns.

When a gland requires packing, it is proper to take out all the old packing that has become hard and set.

A leak in piston rod packing may sometimes be remedied by taking out three or four rings of the packing and reversing it.

If the packing is tightened up while the engine is running, it should be done very gently and evenly, as a very little screwing up may stop the leak, while excessive screwing produces undue friction.

Piston rods are in some of the most advanced practice packed with metallic packing, or packing composed of soft metal. In some forms of metallic packing the construction is such that the gland and packing do not attempt to restrain the line of motion of the piston rod, this duty being left to the guide blocks and guide bars, where it properly belongs.

THE CROSS HEAD.

In engines having Corliss frames, the cross head is provided with shoes and adjusting screws, to take up the wear.

When guide bars are shaped thus ⊥⊤ the cross head is provided with gibs (usually of brass composition) to take up the wear.

In either case care must be taken to make the adjustment correct, and thus keep the piston rod in line. The shoes or gibs should not bear hard upon the guides, but be an easy sliding fit without lost motion.

Cross head pins should be kept eased away on the two parts of their circumference which are within the connecting rod brasses or boxes and near the joint faces of the same. This is necessary because the wear is greatest on the crowns of the boxes, and the pins are apt to wear oval. In some engines, the surface of the pin is cut away, but if it is not, and the pin can be revolved in the cross head, it is a good plan to give it half a turn occasionally, which will keep it round.

THE GUIDE BARS.

The guide bars of an engine require to be set exactly in line with the axis of the cylinder bore, so that they may guide the piston to travel in a straight line. They should be an easy sliding fit to the cross-head guide.

The top bar is more difficult to lubricate than the bottom one, especially when it receives the most pressure, as is the case when the top of the fly-wheel runs towards the cylinder.

Cast iron guide bars wear better than either brass, iron, or steel ones, so long as they are properly lubricated. The face of each guide bar should be cut away, so that the ends of the cross head guides will travel past it. This will prevent a shoulder forming at the ends of the bar as the face wears away. Such shoulders are apt to cause a knock as the connecting rods are lined up, because in the lining the connecting rod is restored to its original length, and the path of the cross-head guides along the bars may be altered.

THE CONNECTING ROD.

There are two principal kinds of connecting rods, the "strap ended" and the "solid ended." The solid ended wear the best, but are more difficult to get on and off the engine.

Connecting rod straps are secured to the stub ends (as the ends of the rod are called), either by bolts or by one or two gibs, and the brasses are set up by a taper key or wedge.

The taper for connecting rod keys is about an inch per foot.

The angularity of a connecting rod is a term that applies to its path of motion, which is (during all parts of the stroke except on the dead centre) at an angle to the line of engine centres. The effect of this angularity is to cause the piston motion to be accelerated at one part of the stroke and retarded at another, thus causing the point of cut-off to occur at different points of the two strokes.

The direction of the variation is to cause the point of cut-off to occur later on the stroke when the piston is moving from the head end of the cylinder towards the crank.

The amount of variation caused in the two points of cut off by the connecting rod depends upon the proportion that exists between the length of the crank and that of the connecting rod, and is less in proportion as the length of the connecting rod is greater than that of the crank.

An ordinary length of connecting rod is six times the length of the crank, or *six cranks*, as it is commonly termed.

Fig. 3296 represents a cylinder, piston and rod, cross head, connecting rod, and crank.

The piston *b* is shown in the middle of the cylinder, the cross head at E, and the crank pin at B, instead of being at G′, as it would but for the connecting rod, or if the connecting rod was infinitely long.

Now take a pair of compasses and set it from *b* to E, and then try it from *a* to D, and from *c* to F, and it will be seen that the three cross head positions D, E, and F correspond correctly to the three piston positions *a*, *b*, *c*. Then take a pair of compasses and set them to the length of the connecting rod (from E to B) and try them from D to A, from B to E, and from C to F, and it will be seen that crank pin positions A, B, and C correspond to cross head positions D, E, and F, and therefore that the crank is not at half

stroke when the piston is in the middle of the cylinder. Take these same compasses, and resting one point at (G') mark the arc H, and that is where the cross head would be when the crank was at (G'). Now then we see that the connecting rod causes the piston to move slower while running from *a* to *b* than it does while running from *b* to *c*.

THE D SLIDE VALVE.

The various events which are governed by the D slide valve of a steam engine are as follows:

The live steam period is that during which the steam is admitted from the steam chest into the cylinder and the steam admitted during this period is termed *live* steam.

The point of cut off is that at which the valve closes the steam port, and the admission of steam into the cylinder is stopped, hence the point of cut off is at the end of the live steam period.

The period of expansion is that during which the steam is allowed to expand in the cylinder, and therefore begins at the point of cut off, and ends at the point of release.

The point of release is that at which the valve opens the port and permits the steam to escape.

The point of compression is that at which the exhaust port is closed, which occurs before the piston has reached the end of its stroke; the steam that has not passed out of the cylinder is therefore compressed, the compression continuing until the valve opens for the lead.

The lead of the valve is the amount the port is open to the live steam when the crank is on the dead centre.

The point of admission is that at which the port opens for the live steam to enter, and it follows that the lead and compression both act as a cushion, arresting the motion of the piston when it reaches the end of the stroke.

Cushioning begins, however, at the time the exhaust port is closed enough to arrest the escape of the steam, while compression begins when the valve has closed the exhaust port.

The construction of a common slide valve is shown in Fig. 3297,

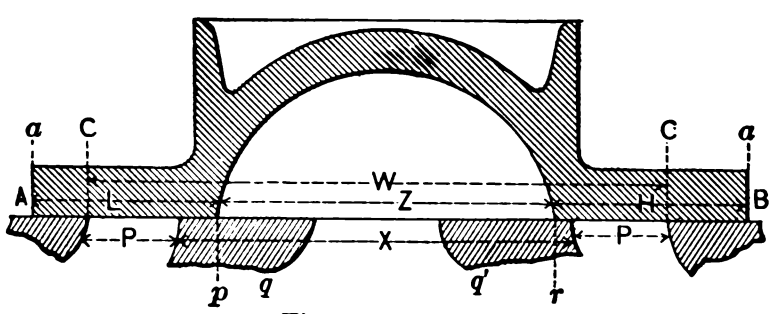

Fig. 3297.

in which the valve is shown in its mid-position. P P are the cylinder steam ports (as the openings through which the steam passes from the steam chest to the cylinder are termed), and at X is the cylinder exhaust port, through which the steam escapes from the cylinder. Z is the valve exhaust port or exhaust cavity.

The lip of a valve is the width of its flange face, or the distance L, which is measured from the steam edge A to the exhaust cavity Z. At the other end of the valve, H is the lip extending from the steam edge B to the exhaust cavity.

Steam lap is the distance the steam ends (or the steam edges as they are called) A, B overlap the steam ports, this distance being shown on the ends of the valve at *a* C. If the valve had no steam lap, its steam edges would just cover the ports, as denoted by the dimension W.

Exhaust lap is the amount the exhaust cavity Z overlaps the bridges *q q'*, as at *p*, *r*.

Unequal steam lap is given to cause the point of cut off to occur at equal points in the piston stroke; thus in the figure there is more steam lap at the head end than at the crank end of the valve. But unequal lap could also be given in order to greatly vary the points of cut off for the two piston strokes, if such was desired.

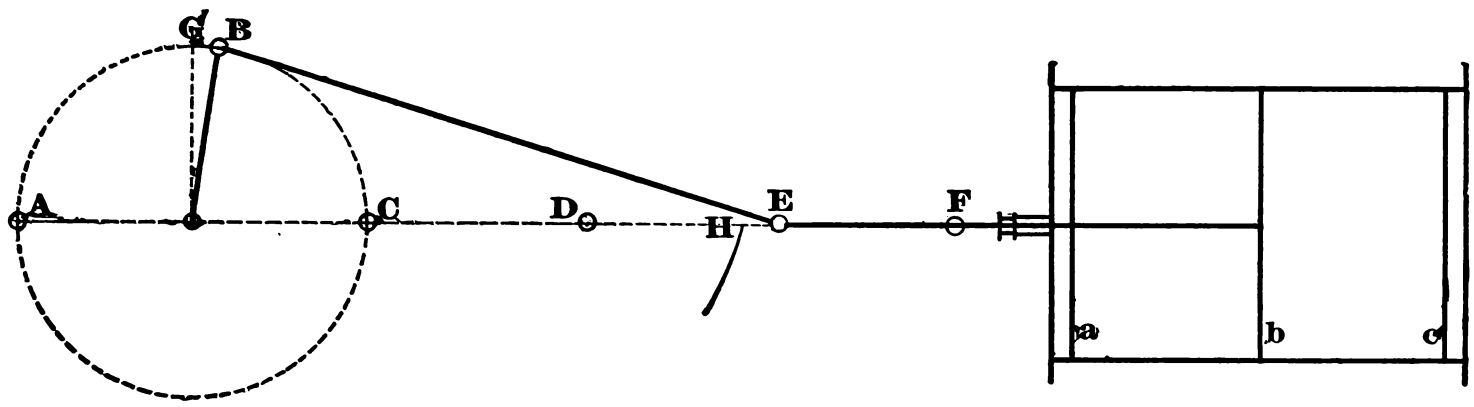

Fig. 3296.

Unequal exhaust lap may be given to equalize the point of release, or to equalize the points of compression.

The head end of the valve (or of the cylinder) is that which is furthest from the crank shaft, the other end, or that nearest to the crank shaft, being termed the crank end.

THE ACTION OF A COMMON SLIDE VALVE.

The action of a common slide valve may be traced as follows:

Port *a*, open to the amount of the lead.

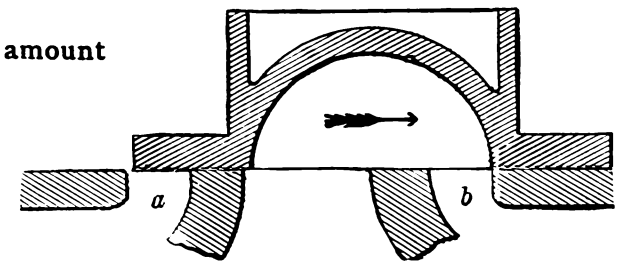

Fig. 3298.

Port *a*, full open for the admission.

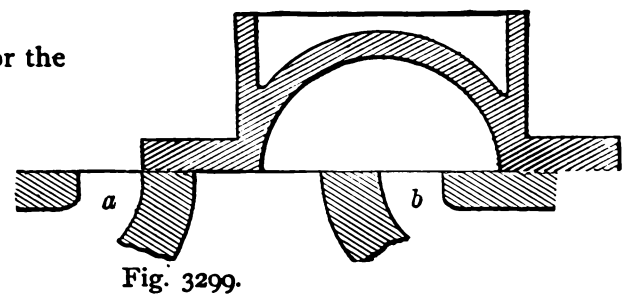

Fig. 3299.

Port *a*, closed for cut off.

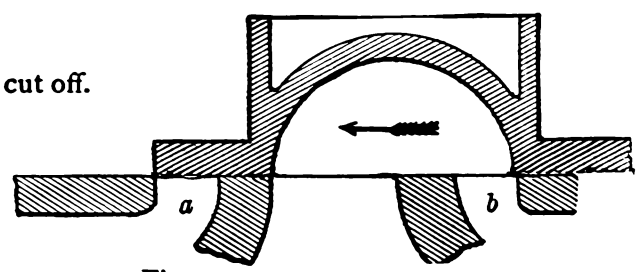

Fig. 3300.

Valve opening port *a*, for the exhaust.

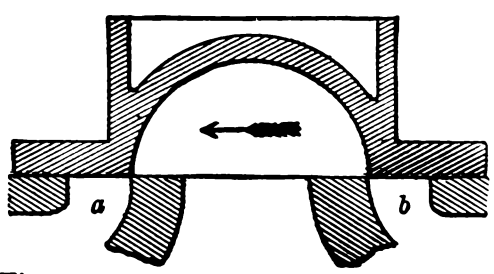

Fig. 3301.

Port *a*, full open for the exhaust.

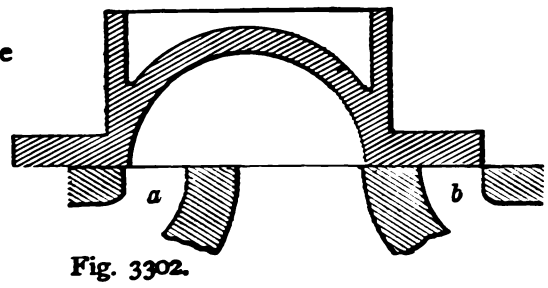

Fig. 3302.

Suppose the port *a* to be at the head end of the cylinder and open to the amount of the lead with the crank on the corresponding dead centre, and if the valve travel be made equal to twice the lap and the lead, the various positions of the valve will be as marked in Figs. from 3298 to 3302; the event corresponding to each valve position being stated in the figures.

DOUBLE PORTED VALVES.

The term *port* applies strictly to the area of opening of the steam passage where it emerges upon the valve seat. The term *steam passage* includes the full length of the opening from the cylinder bore to the face upon which the valve is seated.

A double ported steam port is one in which there are *two* openings or steam ports, leading into *one steam passage*.

A double ported valve is one in which there are two ports *at each end* of the valve. These two ports in some cases admit steam to a single cylinder port, and in others to two steam ports, terminating in one steam passage.

A griddle valve is one that has two or more ports at each end upon a seat that has two or more ports for each steam passage.

Double ported valves are employed in some cases to increase the admission of live steam to the cylinder, and in others to increase the exhaust openings also. The effectiveness of a double ported valve is mainly valuable at the beginning of the stroke, and is especially valuable in cases when the travel of the valve is diminished to hasten the point of cut off, because in such cases the outer edges of the valve do not open the steam port to its full width, and a single port is apt to wire draw the steam. By the employment of more than one port, or several ports, a sufficient admission may be obtained with less valve travel.

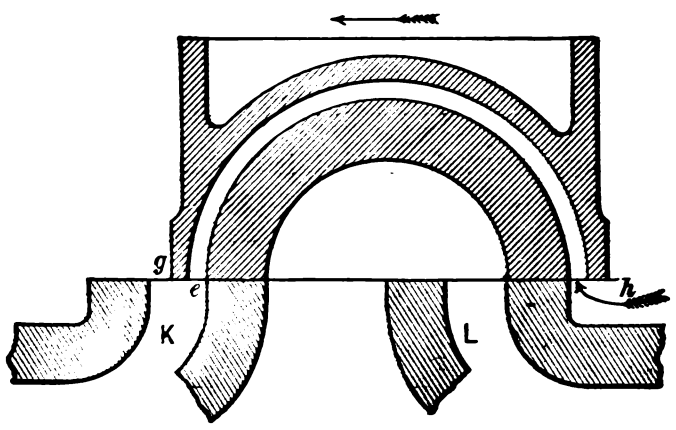

Fig. 3303.

The Allen double ported valve is one in which the second port increases the port opening for the admission only, as shown in Fig. 3303, in which the valve is moving in the direction of the arrow; the port K will receive steam through the opening at *g*, and from a port passing through the valve, the steam entering it as shown by the arrow. The second port forms part of the lap of the valve, and enables the travel to be short enough to be cut off at early points in the stroke, without employing so much steam lap as to widely distort the points of cut off, this latter being a defect of the D valve.

Webb's patent slide valve is circular, and is so arranged as to be free to revolve in the hoop of the valve rod, the effect being that the valve moves around, or to and fro in the hoop, without any special mechanism to produce such movement, and the result is, that the valve and port facings wear smooth and even without any tendency to become grooved.

BALANCED VALVES.

A balanced valve is one in which means are employed to relieve the back of the valve of the steam pressure, and thus prevent its being forced to its seat with unnecessary pressure.

In some of the most successful balanced valves this is accomplished by providing a cover plate, which may be set up to exclude the steam from the back of the valve which works (a sliding fit)

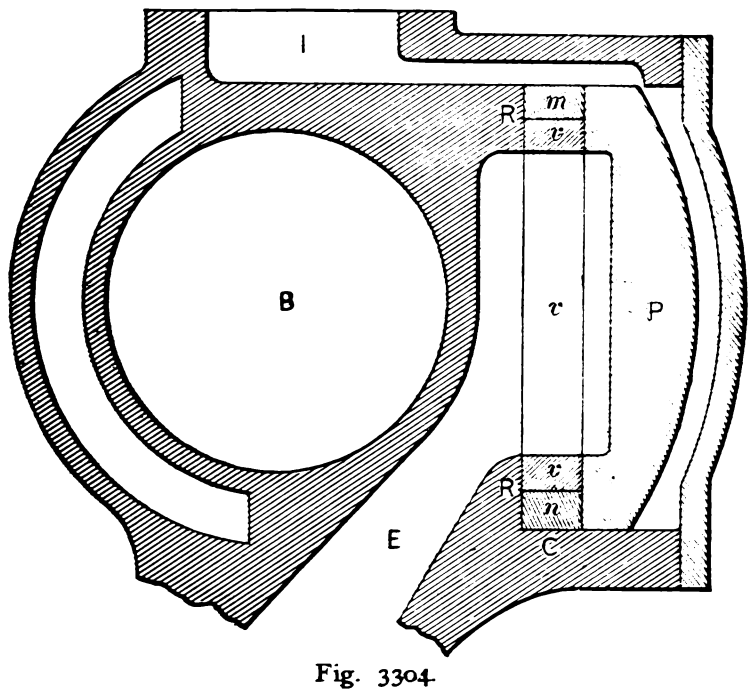

Fig. 3304.

between the valve face and the face of the cover plate. Such a method of balancing is sufficiently effective for all practical purposes, if the following conditions are observed: The valve rod must be accurately guided so as to avoid side strains; the valve must fit accurately to its seat and to the cover plate, and the adjustment so made that the valve slides freely at first, being steam tight, and yet allowing room for lubrication to enter. When the travel of a valve, balanced by a cover plate, is varied to alter the point of cut off, the construction must be such that the ends of the valve at the shortest stroke pass over the ends of the seat and cover plate faces, or otherwise the middle of the seat and cover plate faces will wear hollow.

The Buckeye, Porter-Allen, and Straight-Line Engines are examples of practically balanced valves. The first of these has a balancing device that follows up the wear; the second has an adjustment whereby the cover plate may be set up to take up the wear; and in the third the wear is reduced to a minimum, by accurately fitting and guiding the parts.

The construction of the valve in the Straight-Line Engine is shown in Fig. 3304, in which B represents the cylinder bore; the valve *v* rests on a parallel strip *n*, and on its top rests the parallel strip *m*, the pressure relieving plate P is set up firmly against the pieces *m n*, whose thicknesses are such as to leave the valve a working fit between the faces of R R and of P.

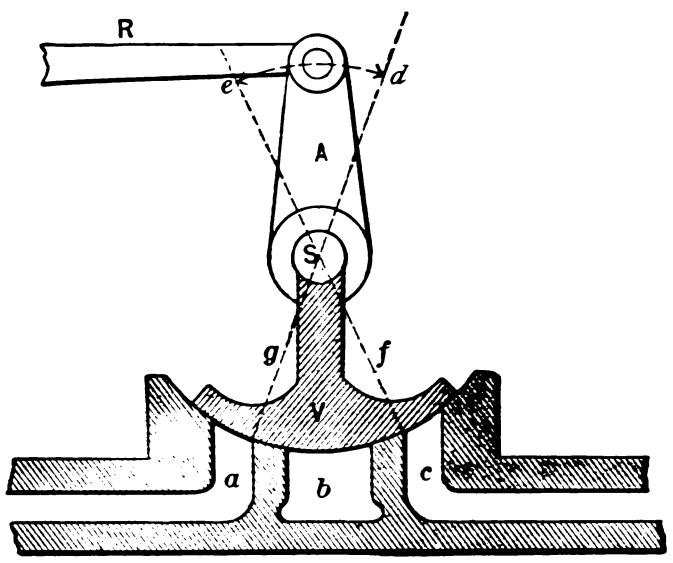

Fig. 3304 *a*.

Instead of the valve sliding on a flat face, it may work upon a shaft or spindle as a centre, its face moving in an arc of a circle, and its action will be the same as a flat valve having the same proportions. Fig. 3304*a* represents a valve V of this construction, whose shaft is at S, A being an arm fast on S, and driven by the eccentric rod R. To find the necessary amount of travel for such a valve, we draw lines, as *f*, *g*, from the inner edges of the steam ports, through the centre of the shaft S, and also draw an arc through the centre of the eye of arm A, and where lines *f g* cut the arc, as at *d* and *e*, are the extremes of motion of A.

PISTON VALVES.

A piston valve acts the same as a flat or plain (D) valve, having the same amount of lap lead and travel. In Fig. 3305 we have a cylinder with a flat valve on one side and a piston valve on the other, the head end ports being about to take steam, and it is seen that the eccentrics occupy the same positions for the two valves.

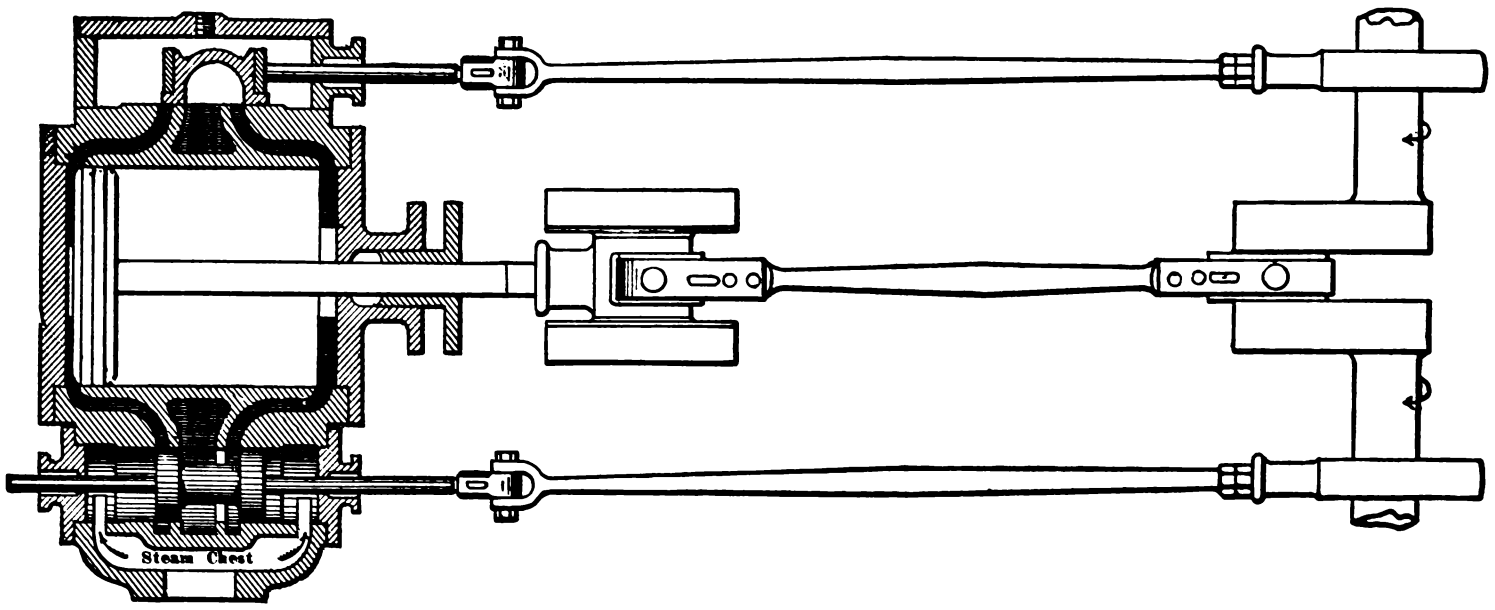

Fig. 3305.

The steam ports are, for the piston valve, annular grooves provided in the bore in which the valve fits. The piston valve is balanced because it receives its steam pressure on the ends, but it will not follow up its wear as the flat valve does, hence it is liable to leak.

SEPARATE CUT OFF VALVES.

Meyer's cut off valve is constructed as shown in Fig. 3306, M being the main valve, and *v v* the two cut off valves, whose sole duty is to cut off the steam at an earlier point than the main valve would do.

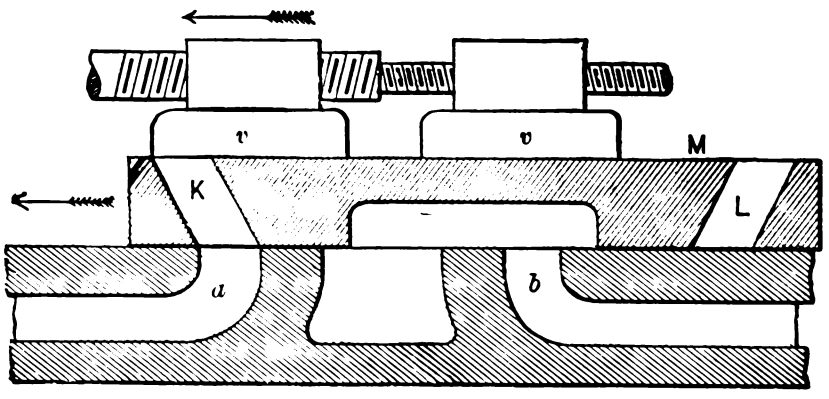

Fig. 3306.

If the engine is to have a fixed point of cut off, or, in other words, if the cut off is always to occur at some one particular point in the stroke, the valves may be set to do so, and equalize the points of cut off.

Variable points of cut off with the Meyer's valve may be obtained by shifting the position of the eccentric that operates the cut off valve, but it is usually done by means of moving the valve by a right and left hand screw, such as shown in Fig. 3306. The cut off eccentric is set ahead of the main eccentric, so that the cut off valve will close the ports before the main valve would do so; thus, in the figure the cut off valve is shown to have effected the cut off for port *a* by the time the main valve has fully opened port *a*, and is reversing its motion. If the engine requires to reverse its motion, the cut off eccentric is set exactly opposite to the crank, but otherwise, it may be set 8 or 10 degrees either ahead of or behind the crank, but if set too little ahead of the crank, the port may reopen after the cut off has been effected.

Gonzenback's cut off valve is constructed as in Fig. 3307, the steam chest having two compartments. A, A are the cylinder steam ports, C the main valve, and E the cut off valve, whose ports (as G) are made wider than the ports F.

Reducing the travel delays the point of cut off in the Gonzenback valve, whereas in the common slide valve it gives an earlier cut off.

THE ECCENTRIC.

When a single eccentric is used, it is simply termed *the* eccentric. If a cut off valve (or two cut off valves) are used upon the engine, then the eccentric that works the main valve is called the

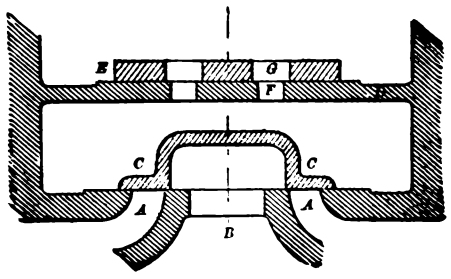

Fig. 3307.

main eccentric, while that which works the cut off valve or valves is called the cut off eccentric. The main valve is that which works on the cylinder face; the cut off valve is that which effects the cut off.

A shifting eccentric is one that is *moved across* the shaft so as to alter its amount of throw, and, therefore, the amount of valve travel, the effect being to vary the point of cut off.

In engines where a constant amount of lead is given, or in other words, when the eccentric position is intended to be fixed, the eccentric should be secured to the crank shaft by a feather or key sunk into the crank shaft so as to prevent the eccentric from moving, while enabling it to be taken off and replaced without re-

quiring any operations to adjust its position with relation to the crank.

The feather should fit tight on the sides, as well as on the top and bottom, and may have a slight taper on the sides, which will make it easier to fit the featherway or keyway to the feather, and easier to put the eccentric on or take it off.

By this means the eccentric cannot shift, and may be replaced after being taken off without having to set the whole valve motion over again.

When the amount of valve lead or of compression is varied to suit the speed at which the engine is to run, or to aid the counterbalancing of the engine, a feather cannot be used because it will not permit the eccentric to be moved to effect the adjustment.

Set screws possess disadvantages, inasmuch as that the point of the set screw may leave an indentation, which, if the eccentric is moved a trifle, may cause the set screw point to fall back into the old indentation, thus rendering it difficult to make a small adjustment of eccentric position.

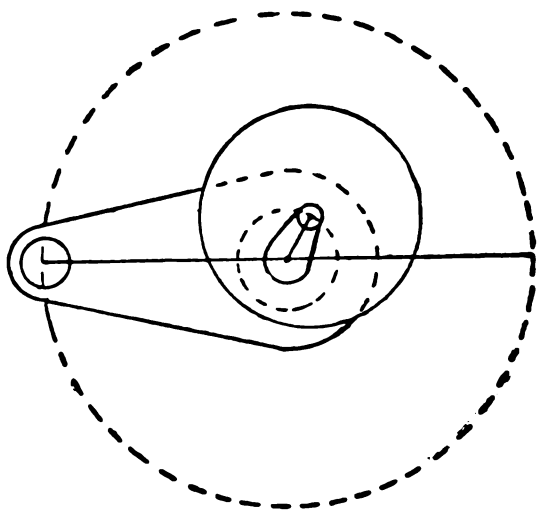

Fig. 3308.

An eccentric is the exact equivalent of a crank having the same amount of throw, as may be seen from Fig. 3308, in which the outer dotted circle represents the path of the crank and the inner one the path of the centre of the eccentric. A small crank is marked in, having the same throw as the eccentric has, and the motion given by this small crank is precisely the same as that given by the eccentric whose outer circumference is denoted by the full circle.

Considering the motion of both the crank and the eccentric, therefore, we may treat them precisely the same as two levers, placed a certain distance apart, revolving upon the same centre (the centre of the crank shaft), and represented by their throw-lines.

In Fig. 3309, let the full circle E E represent an eccentric upon a shaft whose centre is at C, and let the centre of the eccentric be at *e*. The path of revolution of the eccentric centre will be that of the dotted circle whose diameter is B, D. As the eccentric is in mid-position (*e* being equidistant from B and D), the valve will be in mid-position as denoted by the full lines at the bottom of the figure. Now suppose the eccentric to be revolved on the centre C, until its centre moves from *e* to V, its circumference being denoted by the dotted circle A A, and if we draw from V a vertical line cutting the line B, D at *f*, then from C to *f* will be the distance the eccentric would move the valve, which would then be in the position denoted by the dotted lines at the bottom of the figure. It becomes clear then that if we suppose the eccentric to have moved from mid-position to any other position, we may find how much it will have moved the valve by first drawing a circle representing the path of the centre of the eccentric, next drawing a line (as B D) through its centre, and then drawing a vertical line as (C *e*) through its mid-position and also a vertical line from the eccentric centre in its new position, the distance between these two vertical lines (as distance C *f* in the figure) being the amount the eccentric will have moved the valve.

It may have been noticed that the diameter of the eccentric does not affect the case, the distance B D, or the diameter of the circle described by the centre of the eccentric, being that which determines the amount of valve motion in all cases. This being the

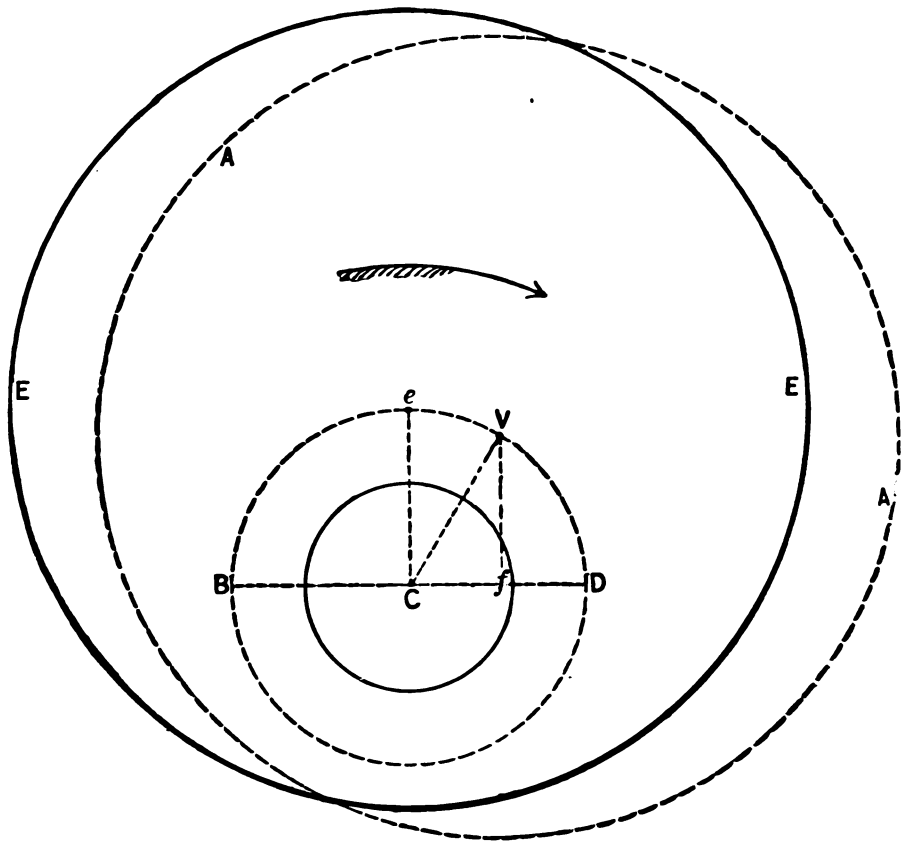

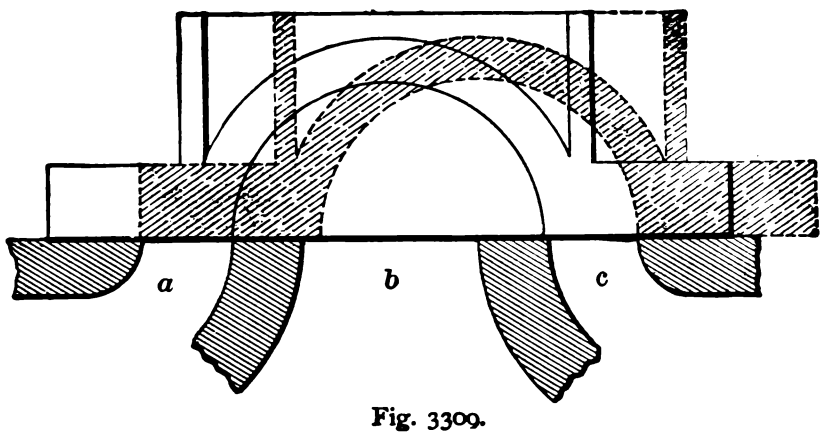

Fig. 3309.

case, we may use the circle representing the path of the eccentric centre for tracing out the valve movement without drawing the full eccentric, and the diameter of that circle will of course equal the full travel of the valve.

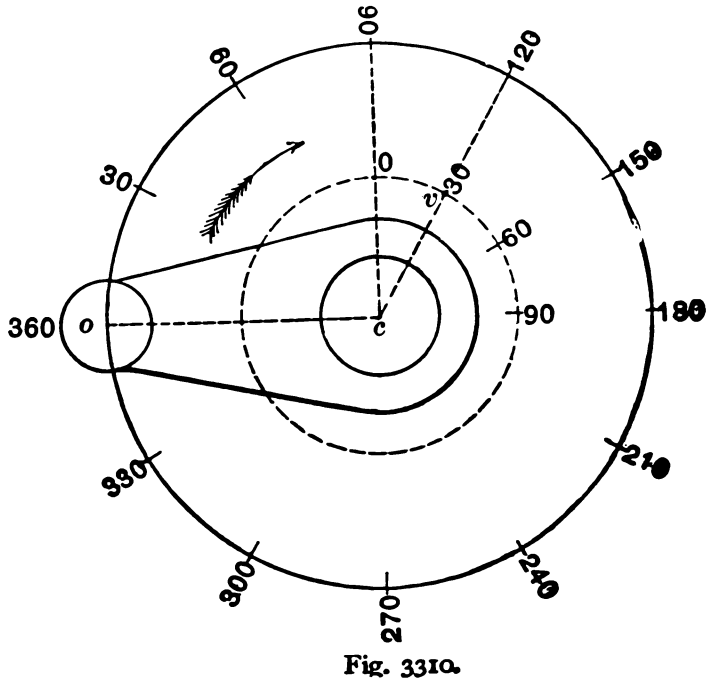

Fig. 3310.

The position of an eccentric upon a shaft is often given in degrees of angle, which is very convenient in some cases. If a valve has no lap or lead, the eccentric will stand at a right angle or angle of 90 degrees when the crank is on the dead centre.

The division of a circle into degrees may be explained as follows: Suppose we take a circle of any diameter whatever and divide its circumference into 360 equal divisions, then each of these divisions will be one degree. The number 360 has been taken as the standard, and this being the case, there are 360 degrees in a circle, in a quarter of a circle there will therefore be 90 degrees, because 90 is one quarter of 360. By means of dividing a circle in degrees therefore we have a means of measuring or defining any required portion of it.

In Fig. 3310 the degrees of a circle are applied for defining the relative positions of a crank and an eccentric. As the zero position of the crank is on a dead centre, it is so placed in the figure, while as the zero position of the eccentric (which is for a valve having no steam lap) is at 90 degrees from the crank, therefore the dotted circle representing the path of the eccentric centre has its O or zero point at 90 degrees from the crank. Now suppose the eccentric centre stood at *v* and the eccentric throw line at *c v*, and it will stand at 30 degrees from O, hence the angular advance of the eccentric is in this case 30 degrees, or in other words, it is 30 degrees in advance of its zero position, or the position it would occupy when the crank is on the dead centre and the valve has no lap and no lead.

If we measure the distance apart of the crank and the eccentric in degrees, we find it is 120 degrees, hence place the crank where we may, we can find the corresponding eccentric position because it is 120 degrees ahead of the crank. The sign for degrees is a small ° placed at the right hand of the figures and slightly above them; thus, thirty degrees would be written 30°.

FINDING THE WORKING RESULTS GIVEN BY A D SLIDE VALVE.

Although not strictly within the line of duty of an engineer or engine driver, he is nevertheless sometimes called upon to find out how a valve of given proportions will dispose of the steam, or what proportions to give to a valve to accomplish certain results.

This is easy enough when either the travel of the valve or the amount of the lap and the width of the port are given, but if the width of the port alone is given, and all the other elements are to be found, it becomes a more difficult problem.

An engineer, however, is rarely called upon to solve the question from this stand-point, which properly belongs to the draughtsman or engine designer.

If the amount of valve travel is given, however, all the other elements may readily be found by the following construction:

Suppose that in Fig. 3311 a D valve is to be designed to cut off the steam when the piston has travelled from position B′ to R, or at three-quarters of its stroke. Then to find the position the crank pin will be in when the cut off occurs, we draw a circle, B D, representing the path of the crank on the same scale that the length of the piston stroke is represented. The straight line from B to D will, therefore, represent the piston stroke without drawing the piston or cylinder at all (this being done in the figure to make the explanation clear). When the crank is on its dead centre, B, the piston, will be at B′, and the valve in the position shown (supposing it to have no lead). As soon as the crank and valves begin to move, the steam will enter steam port *a*, and to find where the crank will be when the piston is at three-quarters stroke, and is, therefore, in position R′, we mark a point at R three-quarters of the distance from B to D. Then, taking no account of the length of the connecting rod, we draw a vertical line Y from R to the circle, and this line gives at H the position the crank will be in when the piston is at R. We have so far, therefore, that while the piston travels from B′ to R′, the crank will travel from B to H. Now, it will be found that if we set a pair of compasses from B to F, which is half-way from B to H, and then rest the compasses at D, and mark an arc V, then a line from V to the centre of the crank will give us the proper position of the eccentric. As the centre of the crank pin and also the centre of the eccentric both travel in a circle, we may, therefore, take a circle having a diameter equal to twice the throw of the eccentric, (or, what is the same thing, equal to the full travel of the valve), and let it represent the paths of both the eccentric centre and the crank pin centre, the latter being drawn to a scale that is found by dividing the length of the piston stroke by the travel of the valve; thus, if the travel is 3 inches and the stroke 30 inches, the diameter of a 3 inch circle will represent the valve travel full size, and the piston stroke one-tenth full size, because 30 ÷ 3 = 10. It has been shown on page 376 that the length of the connecting rod affects the motion of the piston by distorting it, and it is necessary to take this into account in constructing the actual diagram, which may be done as follows:

The valve travel and point of cut off being given, to find the required amount of lap, there being no lead, draw a circle equal in diameter to the travel of the valve, and draw the line of centres B D, Fig. 3312; mark on the line of centres a point R, representing the position the piston is to be in at the time the cut off is to take place.

Set a pair of compasses to represent the length of the connecting rod on the same scale as the circle B D represents the path of the crank; thus, if the connecting rod is three times the length

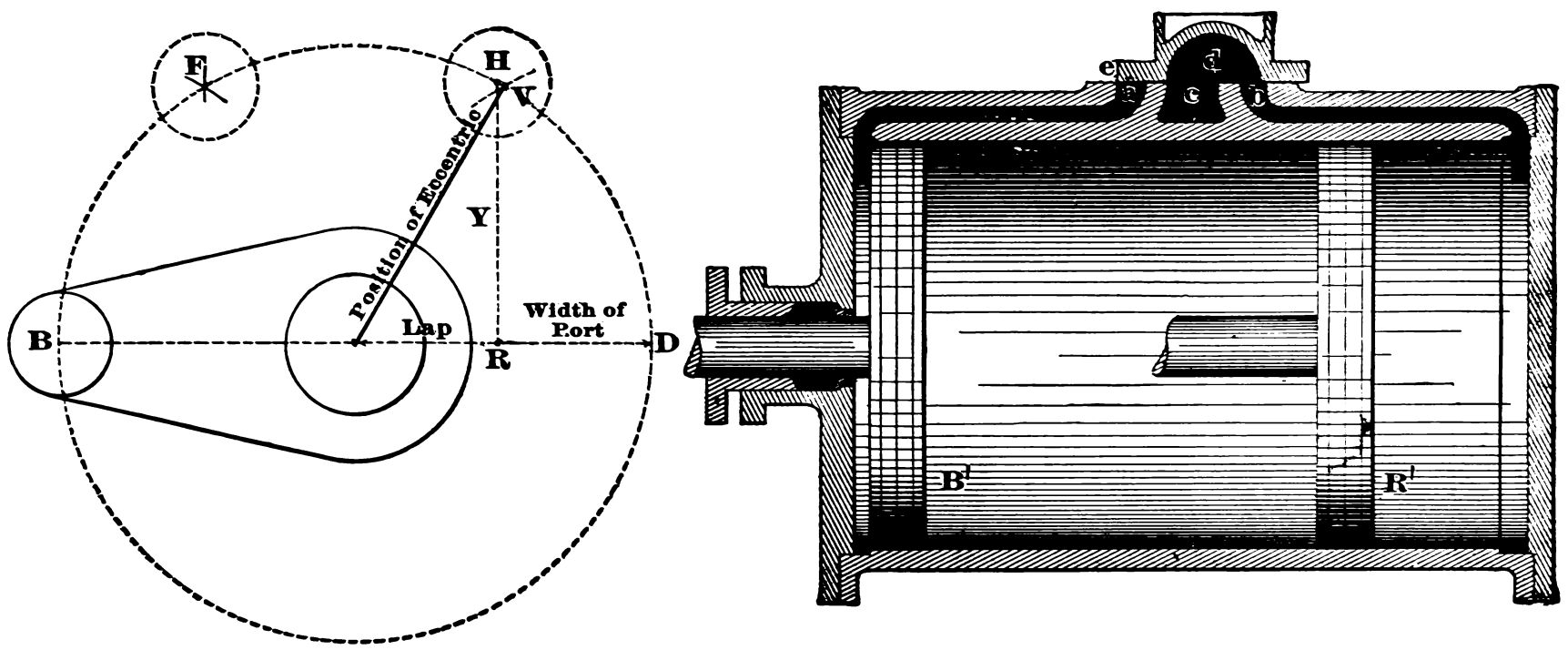

Fig. 3311.

of the stroke, the compasses would be set to three times the diameter of the circle B D.

A straight line from B to D and passing through the centre C of the crank will represent the line of centres of the engine, which

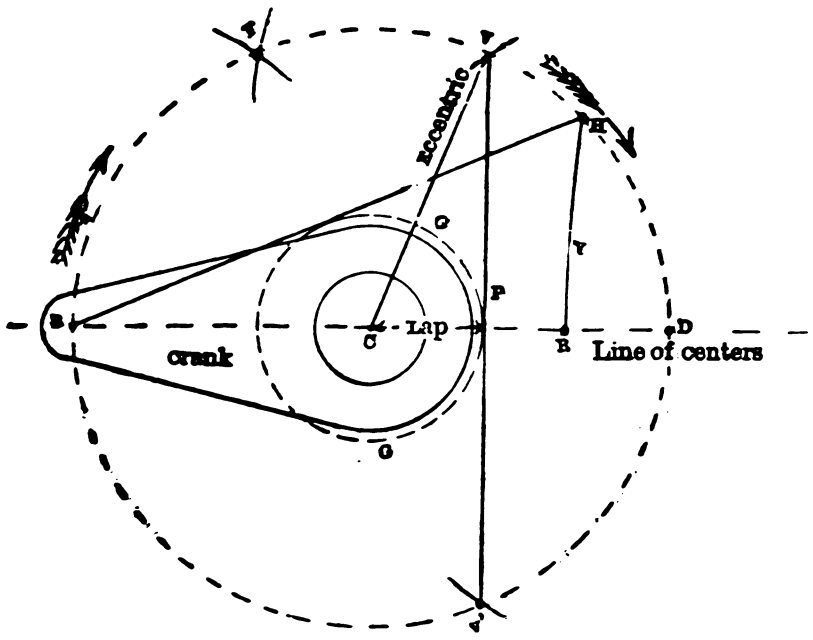

Fig. 3312.

must be prolonged to the right sufficiently to rest the compasses on it and draw the arc Y, which will give at H the position of the crank when the piston is at R, and the cut off is to occur.

We have thus found that the amount of circular path the crank will move through from the dead centre to the point of cut off is from B to H, and as the eccentric is fast upon the same shaft, it will, in the same time, of course, move through the same part of a circle.

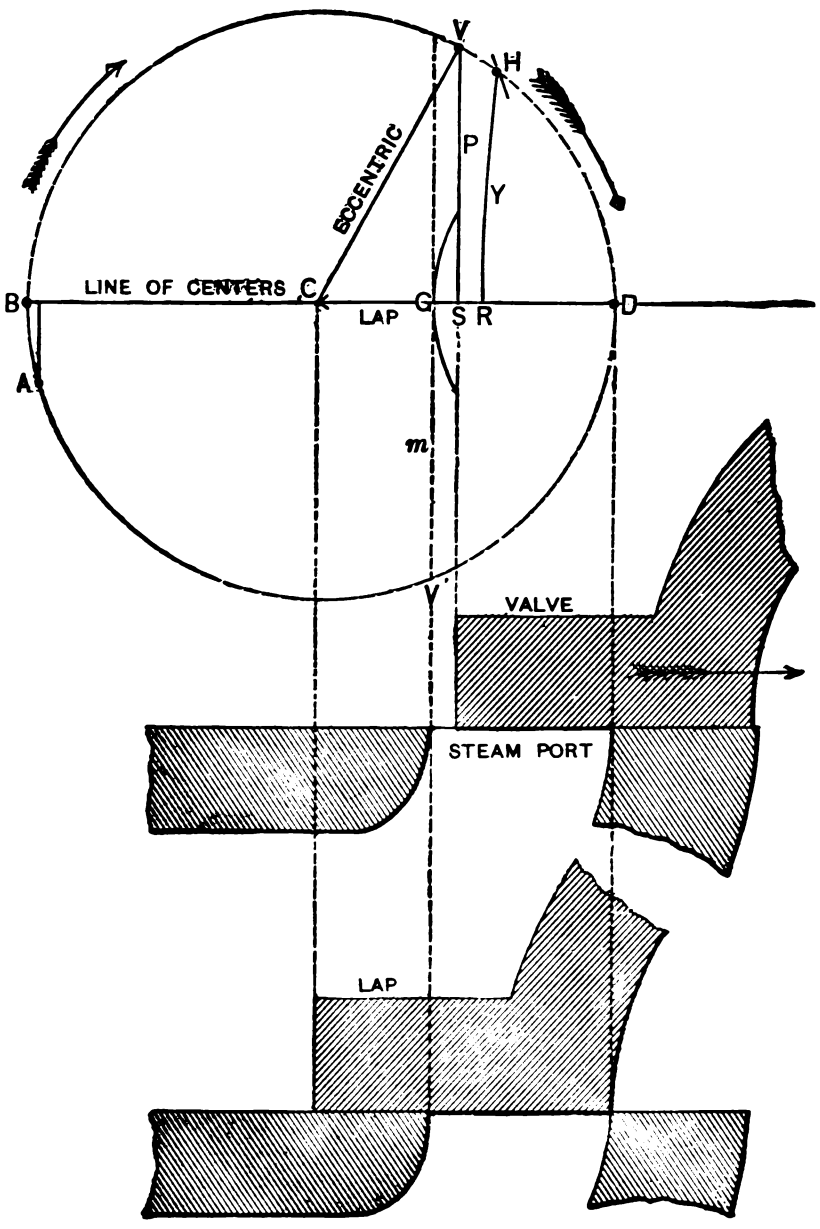

Fig. 3313.

One half of its motion will be to open and one half to close the port, so that we may by means of the arcs at F get the point F, which is midway between B and H, and with the compasses set from B to F, mark from D the two arcs V and V′ whose distance apart will obviously be the same as from B to H.

Then from V to V′ draw the line P, and from this line to the centre C of the crank shaft is the amount of steam lap necessary for the valve, while from this line (P) to D is the width of the steam port.

The proof of the diagram is as follows:

When the crank is on the dead centre, the centre of the eccentric is at V, its throw line being represented by the line from V to C, and the valve is about to open the port as shown in the figure.

While the eccentric is moving from V to D, the valve will move in the direction of the arrow and will fully open the port, while the crank pin will move from B to F.

Then, while the crank moves from F to H, the eccentric will have moved the valve to the position it occupies in the figure, having closed the port and effected the cut off.

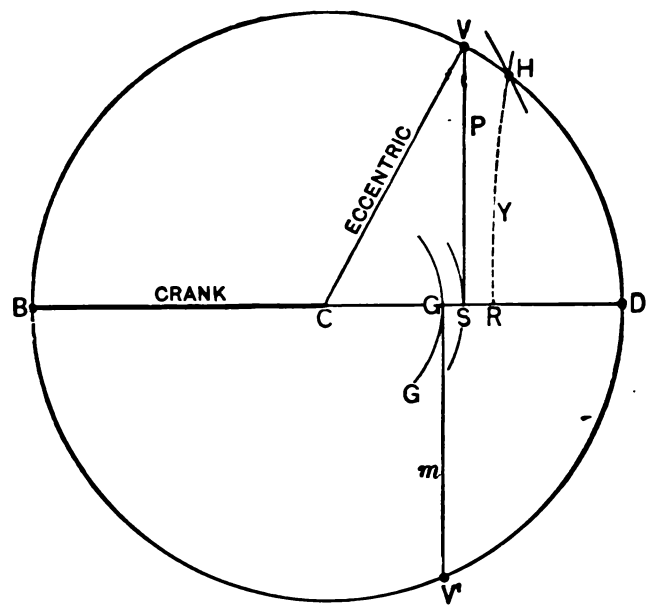

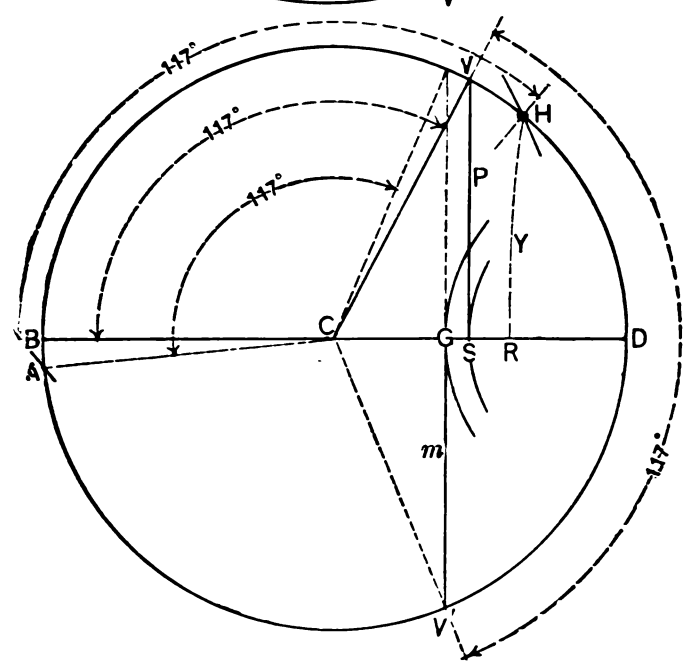

Fig. 3314.

We have here found the amount of lap and the position of the eccentric necessary for a given point of cut off when the latter is given in terms of the piston stroke. If, however, the point of cut off had been given in terms of the crank pin position, we might find the required amount of lap at once, by simply drawing a line from the centre B, the point to H where the crank pin is to be when the cut off occurs.

From this line we could then draw the dotted circle G, and just meeting the line P, which would give the eccentric position.

To find the piston position, the arc Y would require to be drawn by the same means as before.

If the valve is to have lead, the diagram may be constructed as in

Fig. 3313, in which the circle has a diameter equal to the travel of the valve and the cut off is to occur when the piston is at R and the crank at H.

When the valve is at the end of its travel and has fully opened the port, the eccentric will be at D, hence from D we mark an arc G distant from D to an amount equal to the width of the steam port, drop the vertical *m* from G, and at its lower end V′ is the position of the eccentric centre at the point of cut off. Then draw a line P, distant from *m* equal to the lead, which will give at V the position of the eccentric when the crank is on the dead centre, and the valve is open to the amount of the lead. The lap is obviously the distance from the centre C of the crank shaft to the arc G.

We have here found all the points necessary except the point at V′ the eccentric position at the point of cut off. Then with the compasses set to the points V V′, we may mark from B an arc, locating at H the position of the crank at the point of cut off, and from this, with compasses set to represent the length of the connecting rod on the same scale as the circle represents the path of the crank, we may, from a point on the line of centres, mark an arc Y giving at R the piston position at the point of cut off.

When, therefore, the lap is given, we mark it from the center C of the crank shaft, and find the other elements from it, whereas, when the lap is to be found, we mark the width of the port from the end D of the valve travel, and find the other elements from that.

A proof of all the constructions is given in Fig. 3314, in which

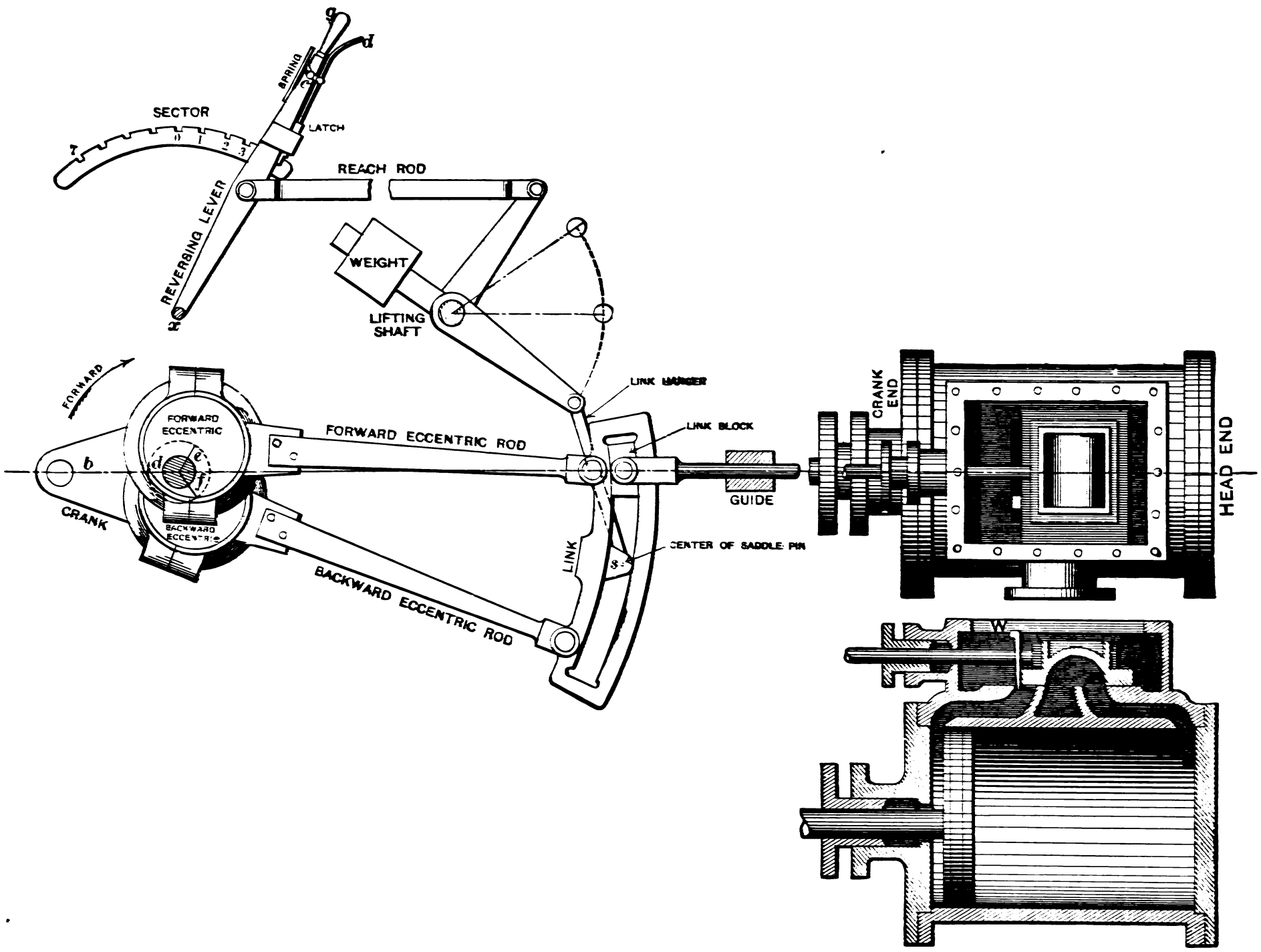

Fig. 3315.

which the valve will open the port for the lead, and this we may find by setting a pair of compasses to the radius B H (or to radius V V′, as both these radii are equal), and from V as a centre, mark at A an arc, which will give the crank pin position at the time the port first opens for the lead, or in other words it will give the position. The proof of the construction is, that if we set the compasses to the distance between the crank pin position on the dead centre and the point of cut off (or from B to H), we may apply the compasses to the points V, V′, which represent the eccentric position when the port is opened to the amount of the lead, and when the cut off occurs.

If the point of cut off only is to be found, we mark from C, Fig. 3314, an arc G representing the amount of valve lap and arc S representing the lead. A vertical P gives the eccentric position V when the crank is on the dead centre at B, and a vertical *m* from G gives the letters of reference correspond to those in the previous figures, and the positions of the parts are marked in degrees of angle.

To find the piston position at the point of cut off, measured in inches, of the piston stroke it must be borne in mind that as the circle B D represents the full travel of the valve, the diagram gives all the positions of the eccentric and valve full size, but that as it represents the crank path on a reduced scale, therefore we must multiply the measurement on the diagram by that scale.

Suppose, for example, that the piston stroke is 10 inches, and the valve travel $2\frac{1}{2}$ inches, and the circle being $2\frac{1}{2}$ inches in diameter, is, when considered with relation to the eccentric motion, full size, but when considered with relation to the piston or crank motion, it is only $\frac{1}{4}$ the size, hence to find the piston position at the time of cut off, we must multiply the distance from B to R by 4.

LINK MOTION FOR STATIONARY ENGINES.

The ordinary mechanism employed to enable a stationary engine to be reversed or run in either direction is the Stephenson link motion. Other forms of link motion have been devised, but the Stephenson form has become almost universal.

Fig. 3315 represents this link motion or reversing gear with the parts in position for the full gear of the forward motion, and Fig. 3316 represents it in full gear for the backward motion.

The meaning of the term full gear is that the parts are in the position in which the steam follows the piston throughout the longest or greatest part of the stroke. When in full gear the link motion operates the valve almost precisely the same as if the eccentric rod was attached direct to the valve spindle and no link motion was used.

Besides enabling the engine to run in both directions, however, the link motion provides a means of reducing the amount of valve travel and thus causes the live steam to be cut off earlier in the piston stroke, thus using the steam more expansively. This is done by moving the reversing lever more upright, the earliest point of cut off being obtained when it is upright and the latch is in the notch marked O on the sector in Fig. 3315. If with the engine standing still we move the link motion from full gear forward to full gear backward and watch the valve, we shall find that the valve lead increases as the reversing lever approaches the upright position, or mid gear as it is termed, and that after passing that point it gradually diminishes again, the valve being so set that the lead is the same for full gear forward as it is for full gear backward.

The reversing lever is used to move the link into the required position and to hold it there (the end of the latch fitting into the notches in the sector being the detaining or locking device); as the link is suspended by its saddle pin S and the link hanger, therefore its motion is to swing or partly rotate on the pin S, and at the same time ending in the arc of a circle whose centre of motion is in the pin at the upper end of the link hanger which is pivoted to the lower arm of the lifting shaft (which is sometimes termed the tumbling shaft). It will clearly be seen that with the position the parts occupy in Fig. 3315, and the crank motion being in the direction of the arrow, the forward eccentric will move the top of the link to the right and therefore the valve will move to the right, while the backward eccentric will move the bottom end of the link to the left.

In full gear, however, the bottom eccentric rod has but a very slight effect indeed on the motion of the valve because both the link hanger and the link block will permit the link to swing on centre of the link block pin as a pivot. If now we turn to Fig. 3316 for the full gear backward, we shall see that these conditions are reversed and the backward eccentric becomes the effective one, being in line with the valve spindle. By shifting the link from one gear to the other, therefore, we have merely changed the direction in which the link will move the valve, and, therefore, the direction in which the engine would run.

In Fig. 3315 for the full gear the parts are shown in position, with the piston at the crank end of the cylinder, and the crank pin on the dead centre, and the eccentrics must be set as shown in the cut, the eccentric rods being open and not crossed. When, however, the crank is on the other dead centre and the piston at the head end of the cylinder, the rods will cross each other, and it is necessary to remember that the rods should be open when the piston is at the crank end of the cylinder. If, however, the running gear contains a rock shaft, or rocker (as is the case in American locomotives), then these conditions are reversed, and the eccentric rods will cross when the piston is at the crank end of the cylinder.

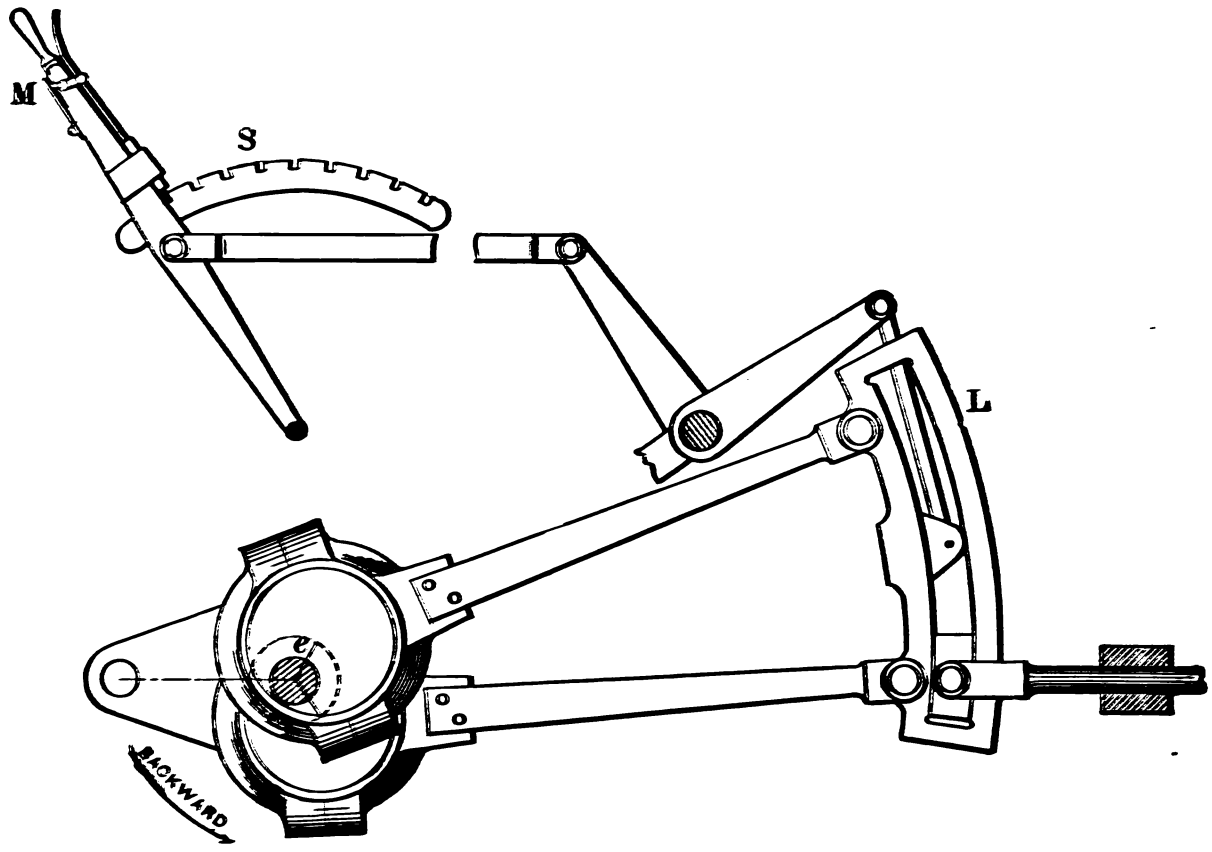

Fig. 3316.

In setting the slide valve of an engine having a link motion, there are two distinct operations. First, to put the crank on the respective dead centres, which will be fully described on page 394, and need not be repeated; and second, to set the eccentrics in their proper positions on the shaft, and correct, if necessary, the lengths of the eccentric rods. The crank being on the dead centre, with the piston at crank end of the cylinder, the eccentric should be moved around on the shaft by hand until there is the desired amount of lead at the crank end port, and temporarily fastened there, a set screw usually being provided (in the eccentric) for this purpose. The lead is best measured with a wedge, W, Fig. 3315. The crank is then put on its other dead centre, and the lead for the head end port is measured. If the lead is to be made equal for the two ports (as is usually the case in horizontal engines) and it is found to come so, the valve setting for the forward gear is complete. If the lead is not equal, the forward eccentric rod or else the valve spindle must be altered so as to make the lead equal. In some engines adjusting screws are provided for the purpose of regulating the length of either the eccentric rod or else of the slide spindle; it does not matter which is altered. The link motion is then put in full gear for the backward motion, and, with the

crank on the dead centre (it does not matter which dead centre), the eccentric is moved by hand upon the crank shaft until there is the required amount of valve lead. The eccentric is then fastened on the shaft and the crank put on the other dead centre, and the lead tried for the other port, and made equal by lengthening or shortening the backward eccentric rod. It is to be noted that altering the length of the eccentric rod or of the valve spindle makes it necessary to reset the eccentric, as it affects the amount of lead at both ports; hence, if any alteration of rod length is made, the whole process here described must be repeated after each alteration of rod length.

FLY BALL OR THROTTLING GOVERNORS.

An isochronal governor is one in which the two opposing forces are equal throughout the whole range of governor action, or, in other words, equal, let the vertical height of the plane in which the balls revolve or swing be what it may.

A dancing governor is one that acts spasmodically. Such an action may occur from undue friction in the parts of the governor or of its throttle valve.

The friction offers a greater resistance to starting the parts in motion than it does to keep them in motion after being started; hence, the parts are apt to remain at rest too long, and to move too far after being put in motion.

Rule to find the number of revolutions a governor should make. Divide the constant number 375.36 by twice the square root of the height of the cone in inches. The quotient is the proper number of revolutions per minute.

Example.—A governor with arms 30½ inches long, measuring from the centre of suspension to the centre of the ball, revolves, in the mean position of the arms, at an angle of about thirty degrees with a vertical spindle forming a cone of about 26½ inches high. At what number of revolutions per minute should this governor be driven? Here the height of the cone being 26.5 inches, the square root of which is 5.14 and twice the square root 10.28, we divide 375.36 by 10.28, which give us 36.5 as the proper number of revolutions per minute at which the governor should be driven.

The construction of the Pickering governor is as follows:

In Fig. 3317 it is shown in its simplest form, and in Fig. 3318

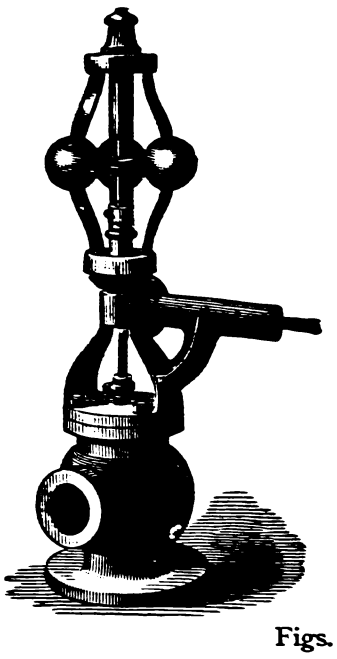

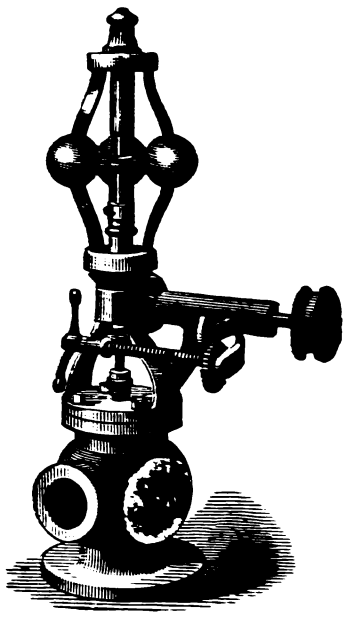

Figs. 3317, 3318.

with the driving pulley and speeder (or engine speed regulating device) attached. This speeder consists of a spiral spring whose tension may be adjusted to more or less resist the rise of the governor balls, and thus enable the engine to run at a greater speed for a given amount of rise of the governor balls, hence by increasing the tension the engine speed is increased.

THE SPRING ADJUSTMENT.

The adjustment of the spring tension is made by a worm actuating a worm wheel on a rod passing through the spring, and to which one end of the spring is attached, the other acting on an arm that projects into a slot in the governor spindle. It is obvious that the speeder can be adjusted while the engine is running.

In Fig. 3319 the governor is shown with the speeder and Sawyer's valve, the latter enabling the governor valve to be opened or closed without affecting the rise and fall of the governor balls, which is done by operating the arm shown on the right, whose

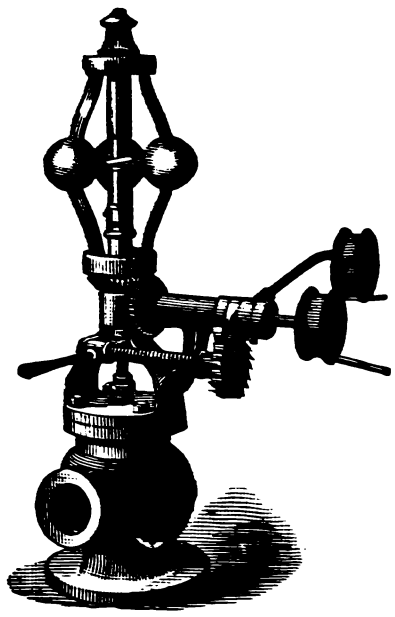

Fig. 3319.

ends are provided with loops, so that a cord may be attached, enabling the engineer to operate the governor from a distance.

The safety stop or stop motion is shown on the right, Fig. 3320.

It acts to close the governor valve and stop the engine in case the belt that drives the governor should get off the pulley or break. This stop motion consists of a pulley suspended by a rod, and riding on the belt which supports its weight. Should the governor belt break, this pulley falls and severs the connection between the valve and the governor, closing the valve, and holding it closed. Fig. 3321 shows the governor in section to expose the construction of the valve. The valve V is what is termed a poppet or poppet valve, which is balanced, because the steam entering at I, and taking the course denoted by the arrows, acts equally on both ends of the valve and does not press it in either direction, while as the steam surrounds the valve it is not pressed sideways.

At B is a gland or stuffing box to keep the spindle or rod steam-tight. At A is the slot for receiving the arm from the speeder and from the stop motion.

P is obviously the driving pulley, imparting motion to the bevel wheels G, which drive the outer spindle S, the inner spindle *s'* being connected to A. The balls are upon ribbon springs D, which are secured at their lower ends to a link fast to the spindle S.

The centrifugal force generated by the balls causes them to move outwards, their upper ends pulling down the cap to which they are secured, and this cap operates the valve.

Governors of this class are sometimes termed *fly-ball* governors.

STARTING A PLAIN SLIDE-VALVE ENGINE.

The method to be pursued before starting a plain slide-valve engine depends upon what the engineer knows about the condition of the engine.

If he knows the engine is in proper running order, all that is necessary is to first attend to the oil cups and start them feeding.

Then, if it is necessary, move the crank into the required position to start it easily; open the waste water cocks to relieve the cylinder of the water that will be condensed from the steam when it enters a cool cylinder, and turn on the steam; giving the throttle valve enough opening to start the engine slowly.

The best position for the crank pin to be in to enable its starting easily is midway between the horizontal and vertical position (or, in other words, at an angle of 45° to the line of centres) and inclining toward the cylinder, so that when the engine moves the piston will travel toward the crank shaft.

There are two reasons why this is the best position for starting.

The first applies to all engines because there is a greater piston area for the steam to act on when the piston is moving toward the crank than there is when it is moving away from it. This occurs because the piston rod excludes the steam from a part of the face of the piston. The second applies to all plain slide-valve engines whose slide valves have equal laps and both steam ports of equal widths, because the live steam follows further on the stroke when the piston is moving toward the crank than it does when it is moving away from it, and it follows that more piston power is developed, and the engine is less likely to stop when passing the dead centre.

When first taking charge of an engine, it is proper, before starting it, to ascertain that it is in fair working order.

A complete examination of an engine should include a test of the fit of the piston to the cylinder bore, of the cross head to the guide bars, of the connecting rod brasses to the crank pin and cross head journals, and of the crank shaft to its bearings. It would also include a testing of the alignment of the crank shaft and of the guide bars, as well as the set of the valves and the adjustment of the governor.

The least examination permissible with a due regard to safety would be to move the engine throughout at least one full revolution by hand, and to see that the connecting rod brasses and the main bearings do not fit too tight to their respective journals, and to then start the engine slowly by giving it only enough steam to move it, keeping the hand on the throttle valve so as to be able to shut off steam instantly should it become necessary.

A thorough examination should be made in the following order:

First, slightly loosen the nuts on the crank shaft bearings and also the connecting rod keys.

Then move the fly wheel around until the crank points straight to the cylinder, which will bring the piston up to the outer end of the cylinder bore.

Take off the cylinder cover and also the follower from the piston head, and see that the piston rings are set out to fit the cylinder bore but not to bind it tight. Then bolt the follower up firmly in place again.

Take off the connecting rod and move the piston until it touches the cylinder cover at the other or crank end of the cylinder, and then draw a line across the side face of the cross head guide and on the guide itself.

Put on the cylinder cover and push the piston back until it abuts against it, and then make another line on the cross head guide and the guide bar, and these two lines will show the extreme positions to which the piston can be moved when the connecting rod is disconnected.

Next put on the connecting rod, carefully adjust the keys or wedges, so that the bores of the brasses fit easily to the crank pin and cross head pin, seeing that the oil holes are clear, and that oil will feed properly to the journals.

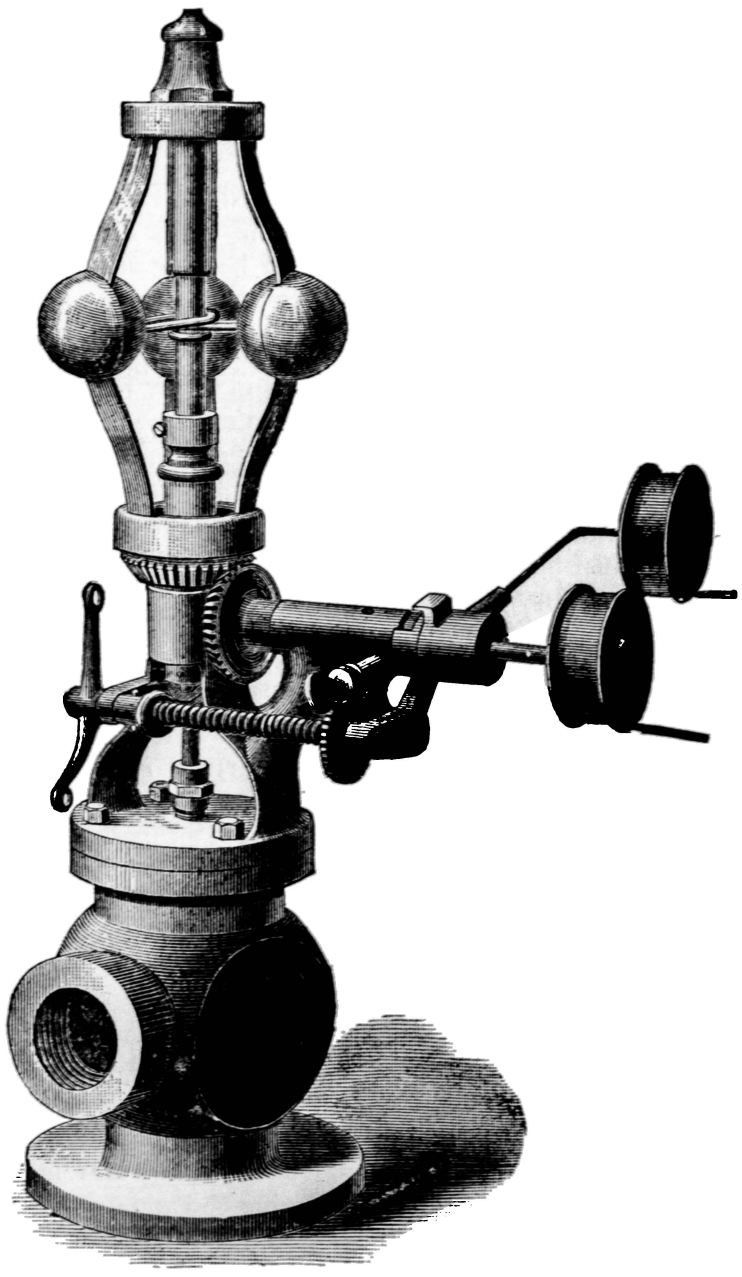

Fig. 3320.

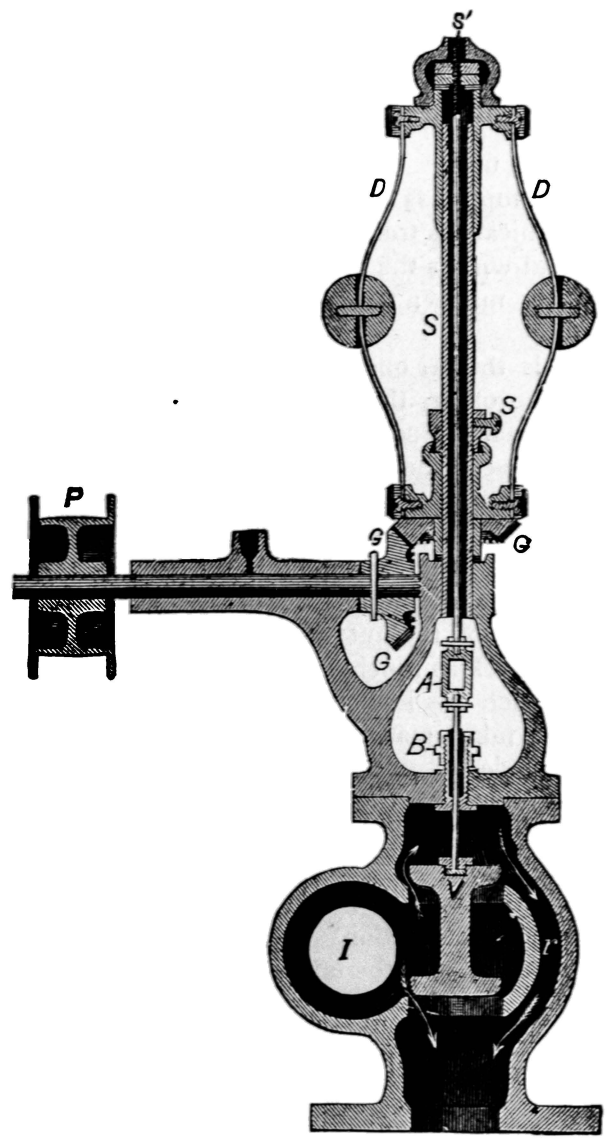

Fig. 3321.

In making this adjustment it is a good plan, if there is any end play of the brasses on the crank pin, to set up the key or wedge until the rod can just be moved by hand on the pin, by first pulling the rod to one end of the pin, and then pushing it to the other.

In putting on the rod, it will be necessary to move the piston a trifle towards the crank.

In making the adjustment of the crank pin fit to the rod brasses, it is a good plan to drive the key home until the brasses are known to bind the crank pin, and then mark a line across the side face of the key and fair with the top face of the connecting rod strap, to then slacken back the key enough to ease back the brasses to a proper fit, and then mark another line on the key.

The first line will form a guide as to how much to slacken back the brasses to adjust the fit, and the second one will form a guide as to how much the key is moved when making a second adjust-

ment, if one should be found necessary after the engine has been running.

Similarly in adjusting the main bearing boxes to the crank shaft, either the nuts, or what are called leads, may be taken to adjust the fit. Leads are necessary when the joint faces of the brasses do not meet, but are left open so that the wear can be taken up while the engine is running.

It is better, however, to let the brasses abut together, so that it may be known that the fit is correct when the nut is screwed firmly home.

The method of taking a lead is as follows: The top brass is loosened, and between the joint faces of the brasses or boxes on each side of the shaft a piece of lead wire is inserted. For a shaft of, say, four inches in diameter, the lead wire will be about $\frac{7}{16}$ inch in diameter, or for 10 inch shaft the wire should be $\frac{1}{8}$ inch in diameter, and should be as long as the brass. The nuts are then screwed firmly home, and the wire will be squeezed between the brasses and thus flattened on two opposite sides, the thickness showing how far the joint faces of the brasses are apart when the bore grips the journal.

A liner, fit strip, distance piece, or shim (all these names meaning the same thing) is a strip of metal placed between the joint faces of the brasses to hold them the proper distance apart to make a working fit of the journal and brasses, when the latter are firmly bolted up.

The fit of the top brass therefore depends upon the fit strip being of the proper thickness from end to end.

Now the lead wire is the gauge for the thickness of the fit strip, the latter being made a trifle thicker than the flattened sides of the lead.

If the lead is thicker one end than the other, or if one lead is thicker than the other, the fit strips must be made so, and the leads must be marked so that it may be known which way they were placed between the brasses so that the proper fit strip may be on the proper side of the brass, and the proper end towards the crank.

Another method that is adopted in the case of large brasses is to screw down the nuts until the brasses bind the journal, and then make a mark on the nut and on the bolt thread. The nut is then slackened back as much as the judgment dictates, and a note made of how much this is, the marks forming a guide.

As the wear takes place, and the nuts screw farther down, a new mark is made on the nut, so that it may always be known how much to screw up or unscrew the nut, to make a light adjustment.

To avoid heating, it is a good plan to press some tallow into the bottom or in one corner of the oil cup, and then pour in the oil used for ordinary lubrication. So long as the bearing remains cool, the oil will feed and the tallow remain.

If the bearing heats, the tallow will melt, and, having a heavier body, will give a more suitable lubrication.

To find if the connecting rod is of the right length to give, as it should do, an equal amount of clearance (or space between the piston and the cylinder cover) at each end of the stroke, move the fly wheel a trifle in either direction, and then move it back until the crank is on the dead centre, and draw a line across the cross head guide and guide bar, and the distance between this line and that drawn when the connecting rod was disconnected, shows the amount of clearance at that end of the cylinder. Then move the crank pin over to its other dead centre, and mark a line across the cross head guide and the guide bar, and the distance between this line and that drawn before the connecting rod was put on will show the clearance at this end of the cylinder.

If the clearance is not equal for the two ends, it should be made so by putting liners behind the connecting rod brasses so as to lengthen or shorten the connecting rod (according as the case may require), and equalize the clearance, while at the same time bringing the connecting rod keys up to their proper heights.

To test the set of the valve, the steam-chest cover must be taken off, the crank placed alternately on each dead centre, and the lead measured for each port.

An unequal or an equal degree of valve lead may be given by suitably altering the length of the eccentric rod, but when the lead is equal for the two ports, its amount must be regulated by moving the position of the eccentric upon the crank shaft.

SQUARING A VALVE.—A method not uncommonly pursued in setting a valve is to what is called *square it* before trying it.

This squaring process consists in so adjusting the length of the eccentric rod that the valve travels an equal distance over or past the steam edge of each steam port; but since the valve does not, when set to give equal lead, travel equally past each port, therefore the work done in squaring a valve is all thrown away, and may result in altering the eccentric rod from its proper length to an improper one, necessitating that it be altered back again in order to set the lead right.

The proper method is to adjust both the length of the rod and the position of the eccentric, by testing the lead at once, lengthening the eccentric rod to increase the lead at the crank end, or vice versa.

Each alteration of eccentric position may render necessary an alteration of rod length, or vice versa, each alteration of rod length may render it necessary to alter the eccentric position, hence the lead should be tried at both ends of the cylinder after each alteration of either rod length or eccentric position.

In vertical engines the weight of the crank shaft causes it to wear the bottom brass or part of the bearing box the most, thus lowering its position, while the eccentric straps and pins wear most in the same direction; hence the wear increases the lead at the head end of the cylinder when the latter is above the crank, and at the crank end when the crank is above the cylinder.

When the cylinder is above the crank, the weight of the piston, cross head and connecting rod is counterbalanced at the end of the downward piston stroke by giving the crank end port more lead; but when the cylinder is below the crank, it is the head end port that must be given increased lead to prevent a pound or knock, or to allow for the wear downwards of the parts.

After an engine is started, the pet cocks should (if they are not automatic) be closed as soon as dry steam issues, and if this cannot be seen, it may be assumed to occur after the engine has made about 20 revolutions.

The parts that will then require particular attention are the crank pin, main bearings, cross head guides and the pump, if there is one. The former must be kept properly lubricated, so that they may not get hot and the cylinder lubricator (which is usually placed on the steam pipe) must be set to self feed properly.

If the crank shaft bearings should begin to heat, loosen the cap bolts and lubricate more freely, or, if it is at hand, some melted tallow may be applied with the oil, as a heavier lubricant may stop the heating.

The crank pin requires the most attention and is the most difficult to keep cool and to examine, because of its circular path rendering it difficult to feel it. This may be done, however, in two ways, first by standing at the end of the engine bed and gradually extending the hand, until the end of the rod meets it as it passes, and, second, by placing the hand on the connecting rod as near to the end of the guide bar as possible where its motion is diminished and moving the hand towards the crank pin, by which means the end of the crank pin may be approached gradually.

If the end of the rod is hot, the engine speed should be reduced or the engine should be stopped so that the connecting rod key or wedge may be eased back and the oil feed made more copious. Then, after the engine has been stopped for the night, the brasses should be taken out and any rough surface, either on the brasses or on the pin, smoothed down with a file.

Hot crank pins may occur from several causes, but by far the most common ones are from improper oiling, or from the engine being out of line.

A heavier oil will often stop, or at least modify, the heating, but its cause should always be discovered and remedied.

Engines that are used out of doors or are exposed to temperatures below the freezing point must be left so that steam leaks may not condense in any of the parts or pipes and burst them.

Leaky throttle valves may, for example, cause water to accumu-

late in the steam chest and freeze, perhaps bursting the steam-chest cover.

To prevent this let the engine stand with the crank just past the dead centre, so that the steam port will be open, and open the waste water cocks on the cylinder, and also on the steam chest if there is any.

If the cylinder is jacketed all the drain cocks for the jacket should also be opened.

A leaky check valve may cause the steam to condense in the pump and freeze it up solid or burst it or the pipes. To avoid this, open the pump pet cock.

Open all the drain cocks on the heater and water pipes.

If the water is left in the boiler all night it is liable to freeze.

To prevent this leave a well banked fire.

In extreme weather remember that on exposed engines the oil, if of such quality as sperm or lard oil, may freeze and prevent feeding until the bearings get hot and melt the oil.

To prevent this use a lighter oil, as, for example, a mineral oil. Or, in case of freezing, melt the oil in the cups with a piece of wire made red hot while getting up steam in the morning.

A good plan to prevent oil from freezing and yet have a good quality of oil is to mix two parts of lard oil with one part of kerosene.

Portable engines should stand as nearly level as possible, so that the water will stand level above the tubes and crown sheet of the fire box.

When feed water is drawn from a natural supply, as from a stream, the strainer at the end of the suction pipe should be clear of the bottom of the stream, where it is liable to be choked.

When the exhaust steam is used to feed the boiler, do not open the valve that lets the exhaust steam into the feed-water tank until a little while after the engine has started, because the oil fed to the cylinder will otherwise pass into the feed tank and may cause priming.

In engines having plunger pumps for feeding the boiler it is essential to keep the plunger properly packed, as a leak there impairs or stops the pump from acting.

A gauge glass may be cleaned when the engine is cold by shutting off the cocks leading from the boiler and filling the glass with benzine, allowing it to stand two hours; the benzine must be let out at the bottom of the glass tube, and not allowed to enter the boiler.

In starting a new engine be careful to let the bearings be slightly loose.

At first give only enough steam to just keep the engine going, and keep the hand on the throttle valve ready to shut off steam instantly if occasion should require.

PUMPS.

Pumps are divided into the following classes:

Lift pumps, in which the water flows freely away from the pump, which performs lifting duty only.

Force pumps, which deliver the water under pressure.

Plunger pumps, in which a "plunger," or "ram," as it is sometimes termed, is used.

Piston pumps have a piston instead of a plunger.

A double acting pump is one in which water enters into and is delivered from the pump at each stroke of its piston or plunger, or, in other words, one in which, while water is being drawn in at one end of the pump, it is also being forced out at the other.

A single acting pump is one in which the water enters the pump barrel during one piston or plunger stroke, and is expelled from the pump during the next stroke, hence the action of the suction and of the delivery is intermittent, although the pump is in continuous action.

For very heavy pressures plunger pumps are generally used, the plunger being termed a *ram*.

The advantage of the plunger or ram is that it gives a positive displacement, whereas in a piston pump a leaky piston permits the water from the suction side to pass through the leak in the piston, to the delivery side.

Piston pumps possess the advantage that there is less difference between the contents of the pump and the displacement than is the case in plunger pumps.

The displacement of a piston pump is found by multiplying the area of the pump bore by the length of the piston stroke.

The displacement of a plunger pump is less than the above, by reason of there being a certain amount of clearance or space between the circumference of the plunger and that of the cylinder bore.

It is desirable to keep the clearance space in all pumps as small

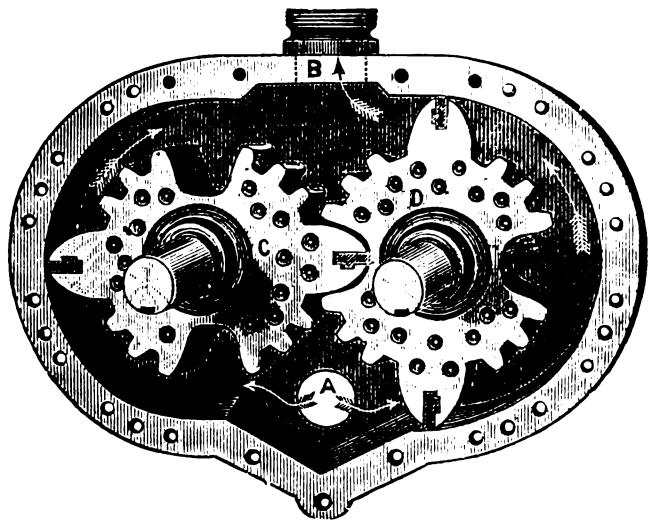

Fig. 3322.

as the conditions will allow, especially if the pump is liable to lose its water.

Losing the water means the falling of the suction water back into the source of supply, which may occur when the engine has to stop temporarily, and there is a leak in the suction valves.

Rotary pumps are those in which the piston revolves, an example of the most successful form of rotary pump being shown in Fig. 3322, which is that used by the Silsby fire engine.

The advantage possessed by a rotary pump is that it keeps the water passing through the suction in a continuous and uniform stream, as it has no valves.

It may therefore be run at a high velocity or attached direct to the engine shaft.

If a rotary pump leaks, the efficiency is not impaired so much as

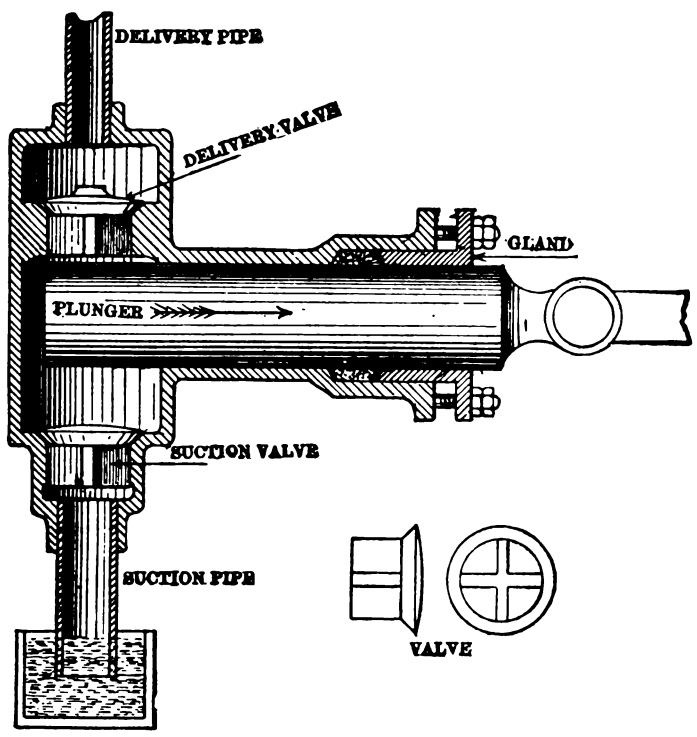

Fig. 3323.

in a piston or plunger pump, all that is necessary being to run the pump at a high speed.

The principles of action of a pump may be understood from Fig. 3323, which represents a single acting plunger pump shown in section, and with the suction pipe in a tank of water, the pump being empty.

The surface of the water in the tank has the pressure of the atmosphere resting upon it, and as the pump is filled with air, the

surface of the water within the pipe is also under atmospheric pressure.

Now suppose the plunger to move to the right, and as no more air can get into the pump, that already within it will expand, and will therefore become lighter, hence there will be less pressure on the surface of the water within the suction pipe than there is on the outside of it, and as a result the water will rise up the pipe, not because the plunger draws it, but because the air outside the pipe presses it up within the pipe.

The water inside the pipe will rise above that outside in proportion to the amount to which it is relieved of the pressure of the air, so that if the first outward stroke of the plunger reduces the pressure within the pump from 15 lbs. to 14 lbs. per square inch (15 lbs. per square inch being assumed to be its normal pressure), the water will be forced up the suction pipe to a distance of about 2¼ feet, because a column of water an inch square and 2¼ feet high is equal to 1 lb. in weight. In Fig. 3324 the pump plunger is shown to

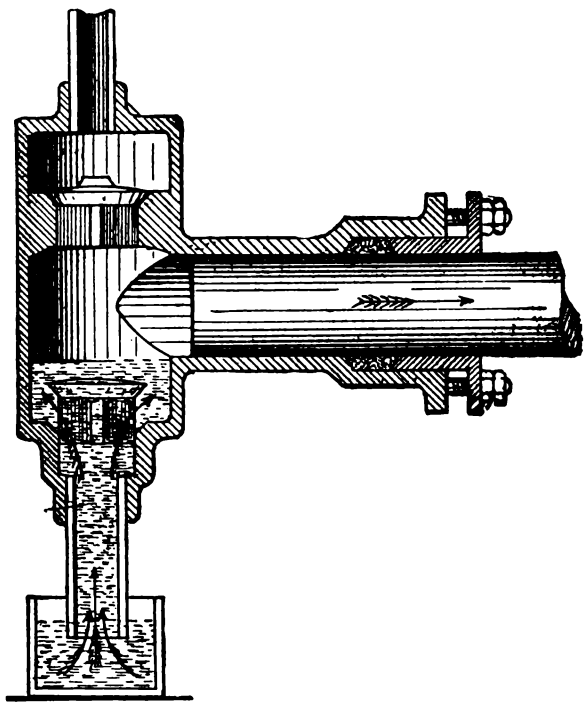

Fig. 3324.

have moved enough to have permitted the water to rise above the suction valve, and it will continue to rise and enter the pump barrel as long as the plunger moves to the right.

When the plunger stops, the suction valve will fall back to its seat and enclose the water in the pump; but as soon as the plunger moves back to the left hand and enters the barrel pump further, the delivery valve will rise, and the plunger will expel from the pump a body of air or water equal in volume to the cubical contents of the plunger, or rather of that part of it that is within the barrel, and displaces water.

If the plunger was at the end of its first stroke to the right and the pump half filled with air, then this air will be expelled from the pump before any water is; whereas if the pump was filled with water, the latter only will be delivered.

Now suppose the first plunger stroke reduces the air pressure from 15 to 14 lbs., and that the second drawing stroke of the plunger reduces the air pressure in the pipe to 13 pounds per inch, the water will rise up it another 2¼ feet, and so on until such time as the rise of a column of water within the pipe is sufficient to be equal in weight to the pressure of the air upon the surface of the water without; hence it is only necessary to determine the height of a column of water that will weigh 15 lbs. per square inch of area at the base of the column to ascertain how far a suction pump will cause water to rise, and this is found by calculation or measurement to be a column nearly 34 feet high.

It is clear then, that however high the pump may be above the level of the water, the water cannot rise more than 34 feet up the suction pipe, even though all the air be excluded from it and a perfect vacuum formed, because the propelling force, that is, the atmospheric pressure, can only raise a column of water equal in weight to itself, and it is found in practice to be an unusually good pump that will lift water thirty feet.

Fig. 3325 shows the plunger making a delivery stroke, the suction valve being closed, and the delivery valve open where it will remain until the plunger stops.

To regulate the quantity of water the pump will deliver in cases where it is necessary to restrict its capacity, as in the case of maintaining a constant boiler feed without pumping too much water in the boiler, the height to which the suction valves can lift must be restricted, so as to limit the amount of water that can enter the pump at each drawing stroke.

The delivery valve should lift no more than necessary to give a free discharge without causing the valve to seat with a blow; but if the pump has a positive motion, the delivery valve must open wide enough to let the water out, or pressure enough may be got up in the pump to break it.

A check valve is merely a second delivery valve placed close to the boiler and serving to enable the pump to be taken apart if occasion should arise, without letting the water out of the boiler.

The lift and fall of both valves act to impair the capacity of the pump. Thus, while the suction valve is falling to its seat, the water already in the pump passes back into the suction pipe, and similarly, while the delivery valve is closing, the delivery water passes back.

A foot valve is virtually a second suction valve placed at the bottom or foot of the suction pipe.

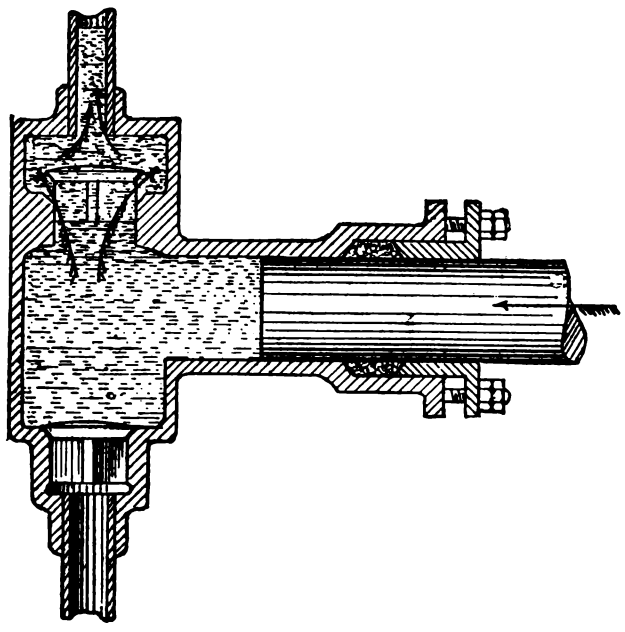

Fig. 3325.

The capacity of a pump is from 70 to 85 per cent. of the displacement of the plunger or piston, and varies with the speed at which the plunger or piston runs.

If a pump runs too fast, the water has not sufficient time to follow the piston or plunger, especially if the suction pipe has bends in it, as these bends increase the friction of the water against the bore of the pipe.

The speed of the piston or plunger should not exceed such as will require the water to pass through the suction pipe at a speed not greater than 500 feet per minute, and better results will be obtained at 350 feet per minute.

An air chamber placed above the suction pipe of any pump causes a better supply of water to the pump by holding a body of water close to it, and by making the supply of water up the suction pipe more uniform and continuous. Air chambers should be made as long in the neck as convenient, so that the water in passing through the pump barrel to the delivery pipe could not be forced up into the chamber, as, if such be the case, the air in the chamber is soon absorbed by the water.

Belt pumps are more economical than independent steam pumps, because the power they utilize is more nearly the equivalent of the power it takes to drive them, whereas in steam pumps there is a certain amount of steam, and therefore of power, expended in tripping the valves and in filling the clearance spaces in the cylinder. Furthermore, the main engine uses the steam expansively, whereas the steam pump does not.

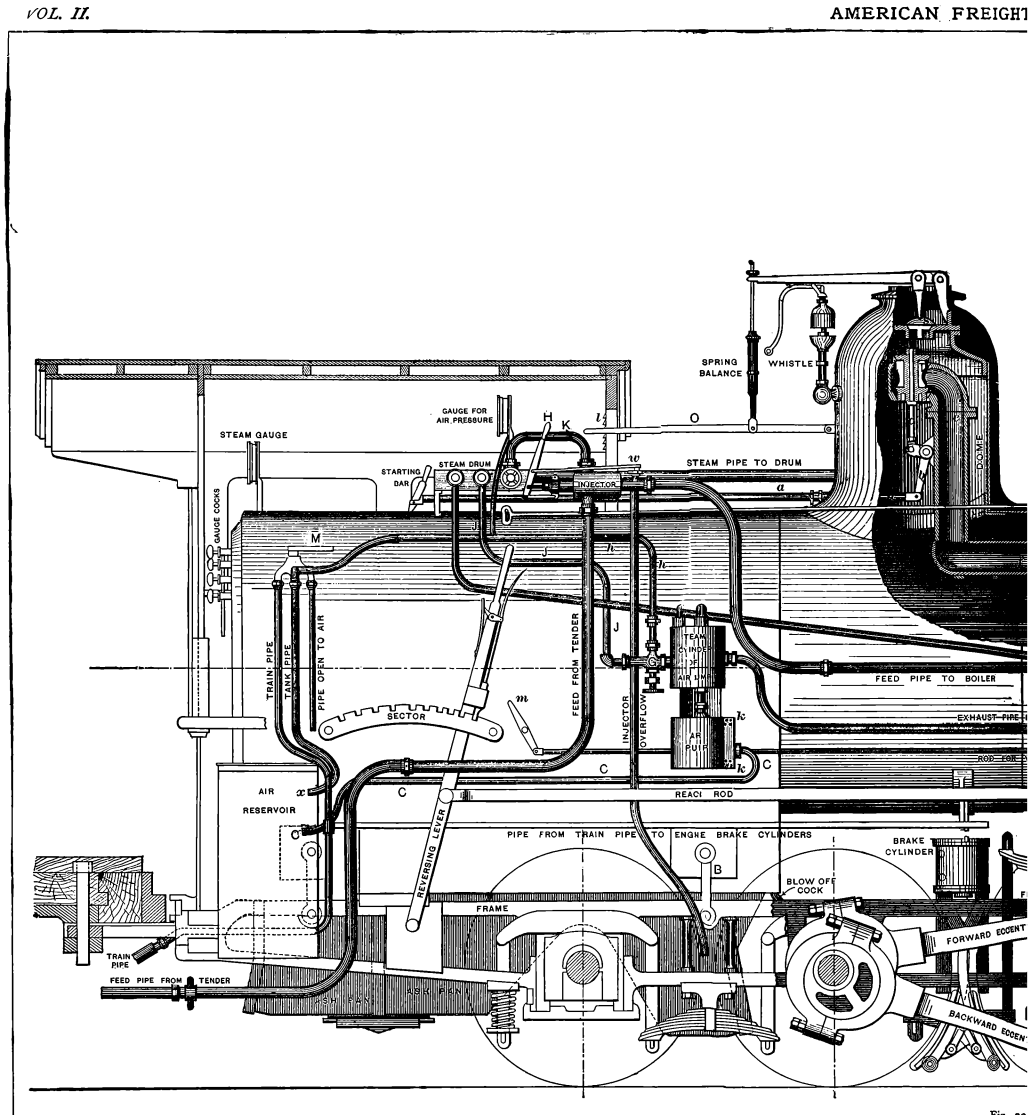
SPRING BALANCE
WHISTLE
GAUGE FOR AIR PRESSURE
STEAM GAUGE
STEAM DRUM
STARTING BAR
INJECTOR
STEAM PIPE TO DRUM
GAUGE COCKS
TRAIN PIPE
TANK PIPE
PIPE OPEN TO AIR
SECTOR
FEED FROM TENDER
INJECTOR
OVERFLOW
AIR PUMP
FEED PIPE TO BOILER
EXHAUST PIPE
ROD LOW
REACI ROD
AIR RESERVOIR
REVERSING LEVER
PIPE FROM TRAIN PIPE TO ENGNE BRAKE CYLINDERS
BRAKE CYLINDER
BLOW OFF COCK
FRAME
FORWARD ECCENT
BACKWARD ECCENT
TRAIN PIPE
FEED PIPE FROM TENDER
ASH PAN

Fig. 33

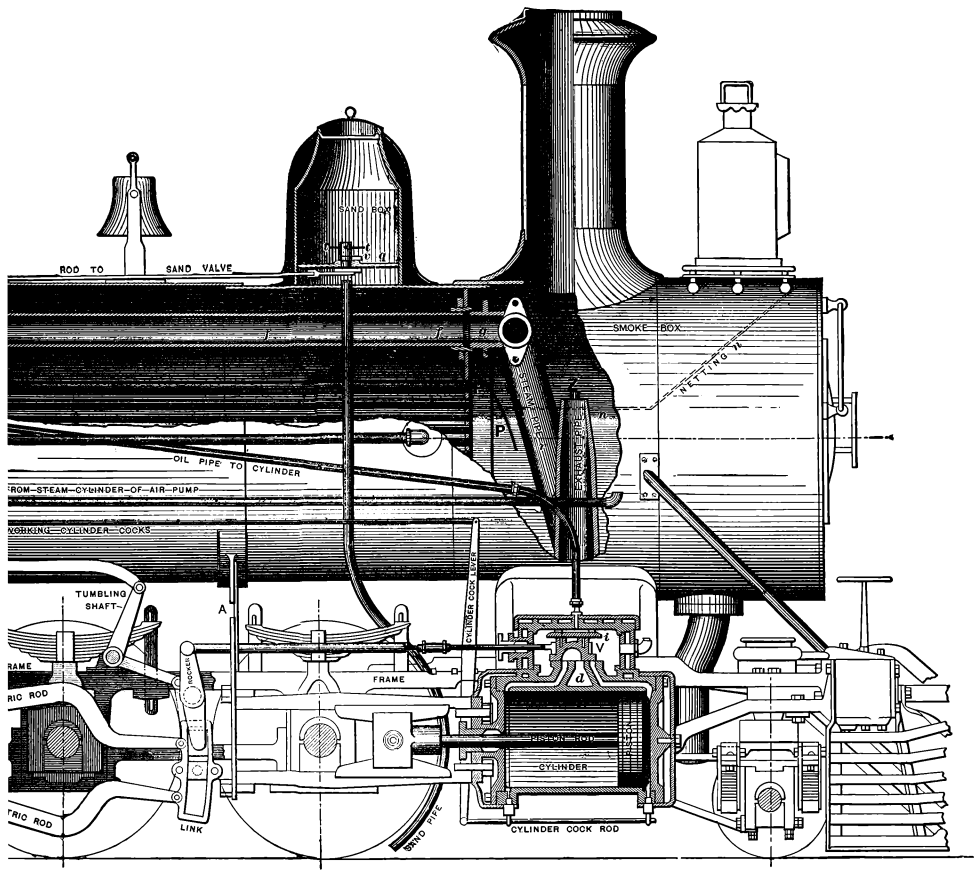

26.

Copyright, 1887, by Charles Scribner's Sons

CHAPTER XXXVI.—THE LOCOMOTIVE.

IN Fig. 3326 is shown a modern freight locomotive, the construction being as follows:

For generating the steam we have the boiler, which at the front end is firmly bolted to the engine cylinders, which are in turn bolted to the frames, while at the back end the boiler is suspended by the links B (one at each end of the fire box on each side of the engine).

The starting bar is shown in position to start the engine, and it is seen that the rod *a* and bell crank *b* are in such a position as to open the valve T, and thus admit steam from the dome to the pipe *e*, whence it passes through pipes *f*, *g* and *r* into the steam chest *i*, the slide valve V distributing the steam to the cylinder. The exhaust occurs through the exhaust port *d*, whence it passes up the exhaust pipe and out at the smoke stack.

The boiler is fed with water as follows:

The *feed pipe from the tender* supplies water to the injector,

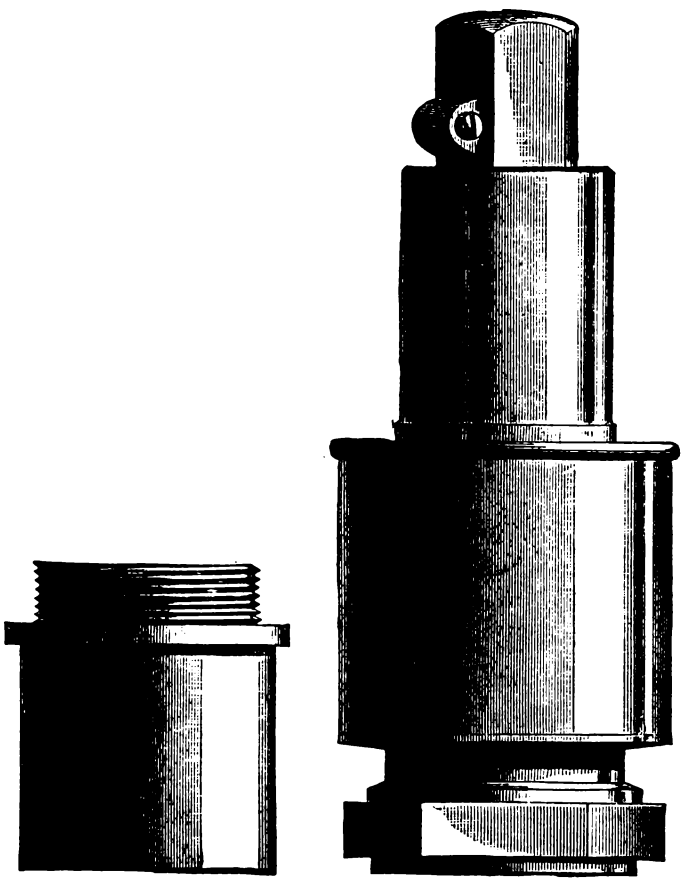

Fig. 3326*a*.

which is forced by the injector through the *feed pipe to boiler* and into the latter.

In the figure the parts are shown in position for the engine to go ahead, hence the reversing gear is in the extreme forward notch of the sector, and the valve gear is in full gear for the forward motion.

The lever *m* is for opening and closing the cylinder cocks, which are necessary to let the water of condensation out of the cylinder when the engine is first started and the cold cylinder condenses the steam.

To supply steam to the injectors (of which there are two, one on each side of the engine) and to the steam cylinder of the pump, there is a steam pipe leading from the dome to the steam drum, the pipe K supplying steam to the injector, and pipe J supplying steam to the steam cylinder of the air pump. The pipe for supplying oil to the slide valve and cylinder is furnished with a sight feed oil cup, the oil being carried by steam from the steam drum. This pipe passes beneath the lagging until it reaches the smoke box, which is done to keep it warm and prevent the oil from freezing, while the steam pressure enables the oil to feed against the steam pressure in the steam chest.

The slide valve is balanced by means of strips let into its back, and bearing against a plate fixed to the steam chest cover.

The frame on the side of the engine shown in the engraving is shown broken away from the yoke A to the fire box, so as to expose the link motion to full view, the shaded portion of the frame being that on the other side of the engine.

The yoke or brace A carries one end of the guide bars. The safety valve S may be raised to see that it is in working order, or to regulate the steam pressure, by the lever O, which has a ratchet tongue engaging with the notches at *l*.

In addition to the safety valve with spring balance, however, a pop safety valve is employed on the part of the dome that is shown broken away, the construction of this pop valve being shown in the outside view, Fig. 3326*a*, and a sectional view, Fig. 3326*b*, the casing being removed from the latter. In the valve seat B is a recess *a*, and upon the circumference of the valve is a threaded ring C′. When the valve lifts, the steam is somewhat confined in the annular recess of the valve, and the extra valve area thus receiving pressure causes the valve to lift promptly and the steam to escape freely. The degree of this action is governed as follows:

The sleeve C′ is threaded upon the upper part of the valve, so that by screwing it up or down upon the valve the amount of opening between the annular recess *a a*, and the lower edge of the sleeve C′ C′, is increased or diminished at will: the less this

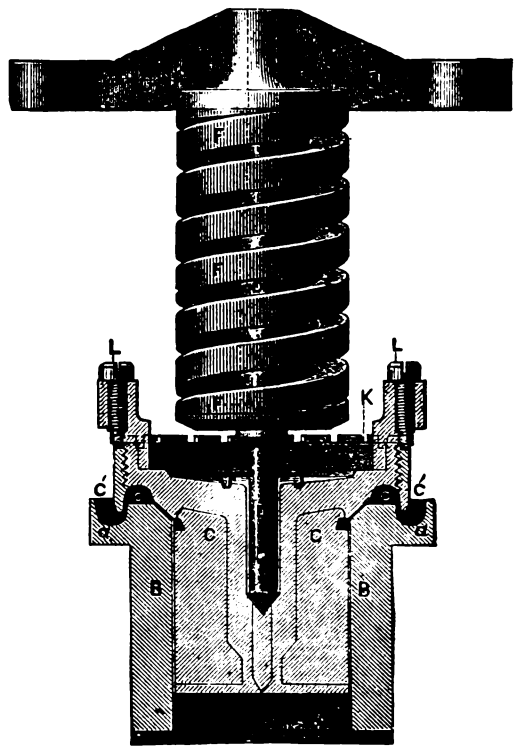

Fig. 3326*b*.

opening, the more promptly the valve will rise after lifting from its seat.

To secure the sleeve or ring in its adjusted position, the ends of the screws L, L seat in notches cut in the upper edge of the sleeve. In many engines pop valves alone are used, and in some cases levers are provided by means of which the pop valve can be raised from its seat to test if it is in working order.

Referring again to Fig. 3326, H is the handle for operating the injector, and *w* a rod for opening the injector overflow.

We now come to the automatic air brake; steam for the steam cylinder of which, is received from the steam drum through the pipe J, passing through the pump governor, or regulator G. The exhaust pipe for the steam cylinder of the air pump passes into the smoke box. The air cylinder receives its supply of air through the small holes at *k*, *k*, and delivers it through the pipe C into the air reservoir or tank, from which it passes through the tank pipe up to the threeway cock or engineer's brake valve, whose handle is shown at M. The brakes are kept free from the wheels and out of action so long as there is air pressure in the air reservoir and in the train pipe, hence the normal position of the handle M is such as to let the air pass from the air reservoir up the pipe *x* and into the train pipe. When the brakes are to be applied, handle M is moved so that there is an open connection made between the train pipe and the *pipe to open* air, which releases the air pressure and then puts on the brakes not only on each car, but also on the engine, because the engine brake cylinders receive their air pressure from the pipe shown leading to the train pipe. From the tank pipe *x* a pipe *h* leads to the top of the pump governor G, whose action is to shut off the steam from the steam cylinder of the air pump whenever the pressure in the air reservoir or tank exceeds 70 lbs. per square inch. A small pipe leads up from pipe *h* to the air pressure gauge.

For regulating the draught of the fire there is a damper door at each end of the ash pan, and to increase the draught, a pipe leads from the steam drum into the smoke box, where it passes up alongside of the exhaust pipe, its end being shown at Z. This is called the *blower*, and its pipe is on the other side of the engine. The plate shown at P, P in the smoke box checks the draught in the upper tubes, and therefore distributes it more through the lower ones.

There are two sand valves, both of which are operated by one rod, the construction being shown in Fig. 3327, which is a plan showing the bottom of the sand box broken away to expose the gear for moving the valves. The two valves *v*, *v* for the sand pipes are on raised seats *e*, *e*, and are fast on the same shafts as the segments *s*, *s*, but the valves are obviously above, while the segments are beneath the bottom of the sand box. The gear wheel W is pivoted to the under side of the bottom of the sand box, and the arm L is fixed to the wheel. At *t* are pieces of wire, which, being fast in the spindle, revolve with it and stir up the sand when the valves are moved. As shown in the figure, the two sand pipes *a*, *a* are open, but suppose the rod is moved endways and L will revolve W, which will move *s*, *s* and the valves *v*, *v*, causing the latter to move over and cover the pipes *a*, *a*, and shut off the sand from the pipes.

Fig. 3328 represents an American passenger locomotive with a steam reversing gear, or in other words, a reversing gear that is operated by steam.

The link motion is substantially the same as that shown in Fig. 3326 for a freight locomotive, the eccentric rods in this case being straight, as there is no wheel axle in the way.

The injector for feeding the boiler is the same as that shown on the freight locomotive.

The ash pan is provided with two dampers, one at each end, and the front one is operated by the bell crank *a c*.

The sand boxes are here fastened to the frame, both sand valves being operated by the lever *m*, which at its lower end connects to a rod, *u*, which at its back end connects to an arm, *p*, on a shaft that extends across the fire box and connects to a rod corresponding to rod *u*, but situated on the other side of the engine and connecting with the other sand valve.

The steam pump for the automatic air brake is on the other side of the engine, and the air reservoirs, of which there are two, are horizontal and situated beneath the front end of the boiler. The air pipe to the triple valve here connects to the front pipe of the three beneath the triple valve, the middle pipe being that which is open to the atmosphere, which is the usual construction. The engine brake receives its air from a pipe on the other side of the engine which feeds the pipes G, V, for the brake cylinder shown in the figure. When the engine is running backwards, the train brakes are operated through the medium of the "pipe to air brake and to front end of engine" which is shown broken off.

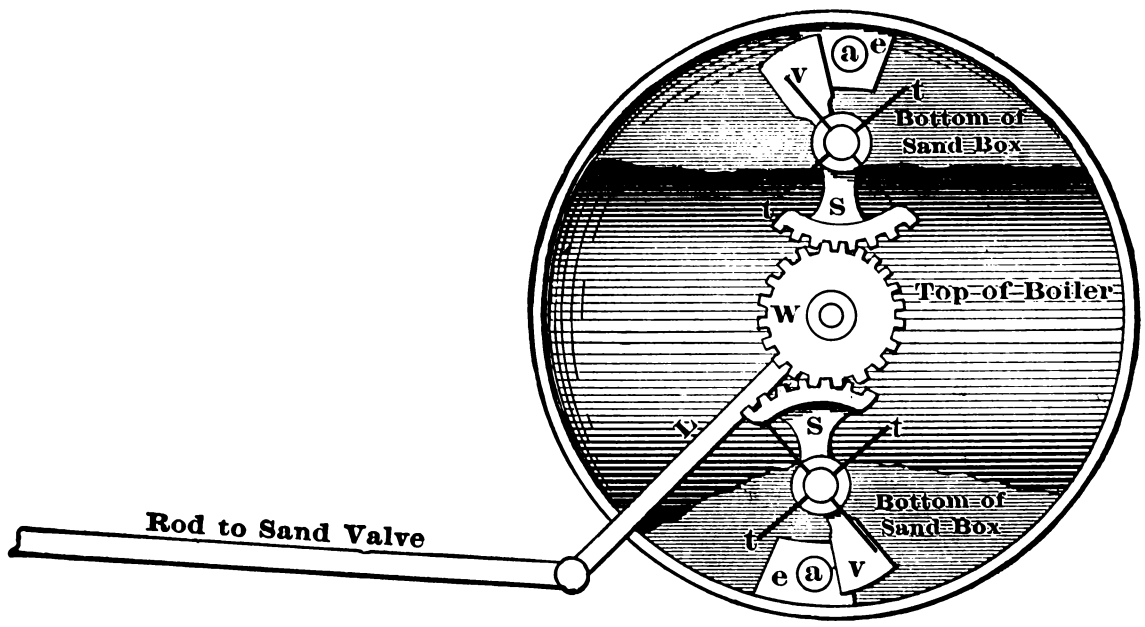

Fig. 3327.

The construction of the steam reversing gear is shown in Fig. 3328*a*. A is a steam cylinder and B a cylinder filled with oil or other liquid. Each of these cylinders has a piston, the two being connected together by their piston-rods C C′. These rods are also connected to a lever D E F, which works on a fulcrum E. The lower end of the lever is connected to the reverse rod F G, the front end of which is attached to the vertical arm of the lifting or reverse shaft. It will readily be seen that if the piston in B is free to move and steam is then admitted to either end of the steam cylinder A, the two pistons will be moved in a corresponding direction, and with them the lever D E F, and the other parts of the reversing gear. A valve, H, is provided, by which communication is opened between the cylinder A and the steam inlet pipe. Another valve, I, is placed between H and the cylinder A, by which the steam may be admitted either into the front or back end of the cylinder. It will be apparent, though, that if the piston in A is thus moved, and the reverse gear placed in any required position, some provision must be made to hold it there securely. This is accomplished by the oil cylinder and piston B. To it a valve, J, is provided, by which communication between the front and back ends of the cylinder may be opened or closed. It is evident that if the piston B is in any given position, and both ends of the cylinder are filled with liquid, the former will be held securely in that position if the liquid in one end cannot flow into the other. If, however, communication is opened between the two ends, then, if a pressure is exerted on the piston B, it will cause the liquid to flow from one end of the cylinder to the other, and thus permit B to move in whichever direction the pressure is exerted.

R is the reverse lever, made in the form of a bell crank, the

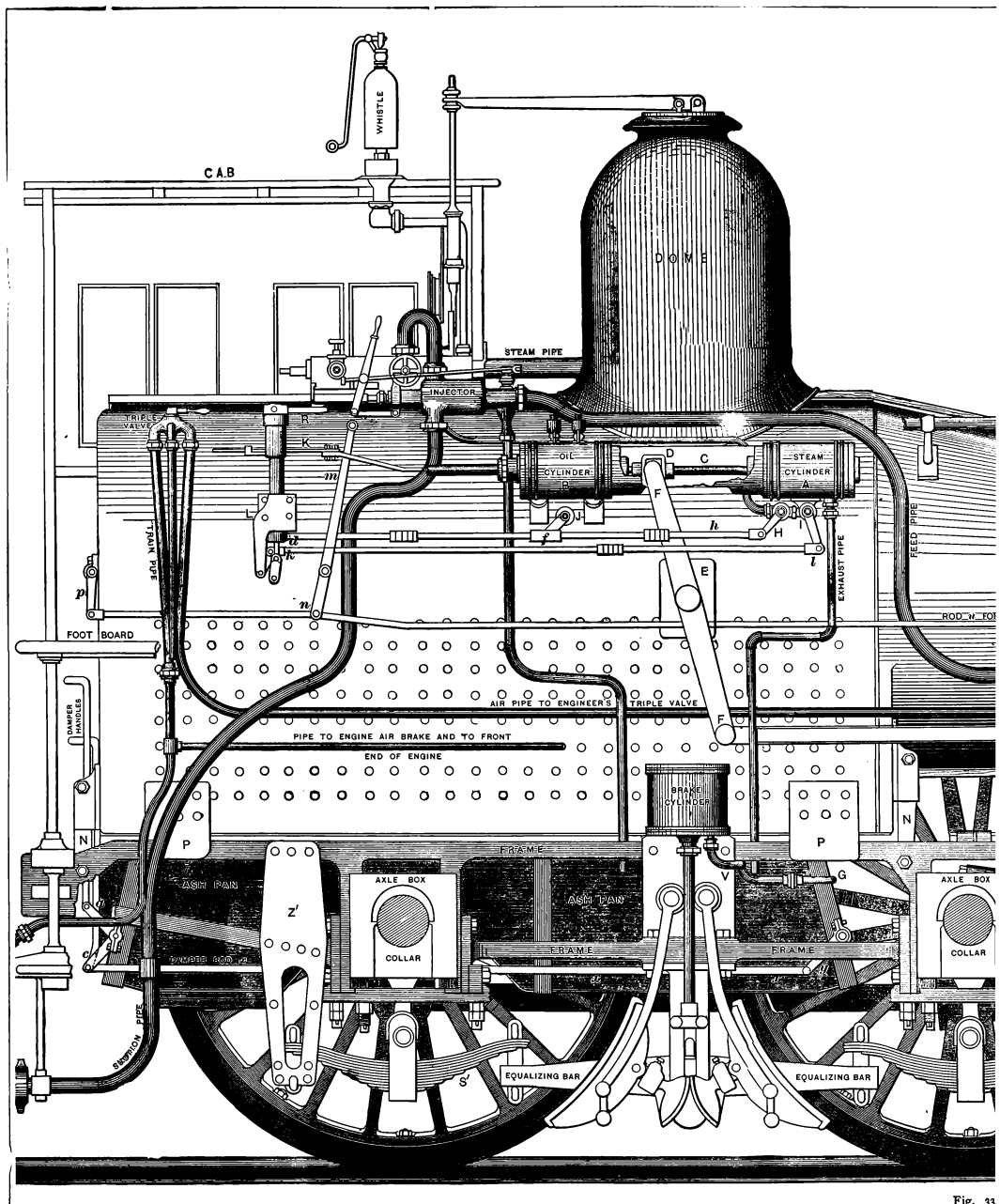

Fig. 33

MODERN MACHINE

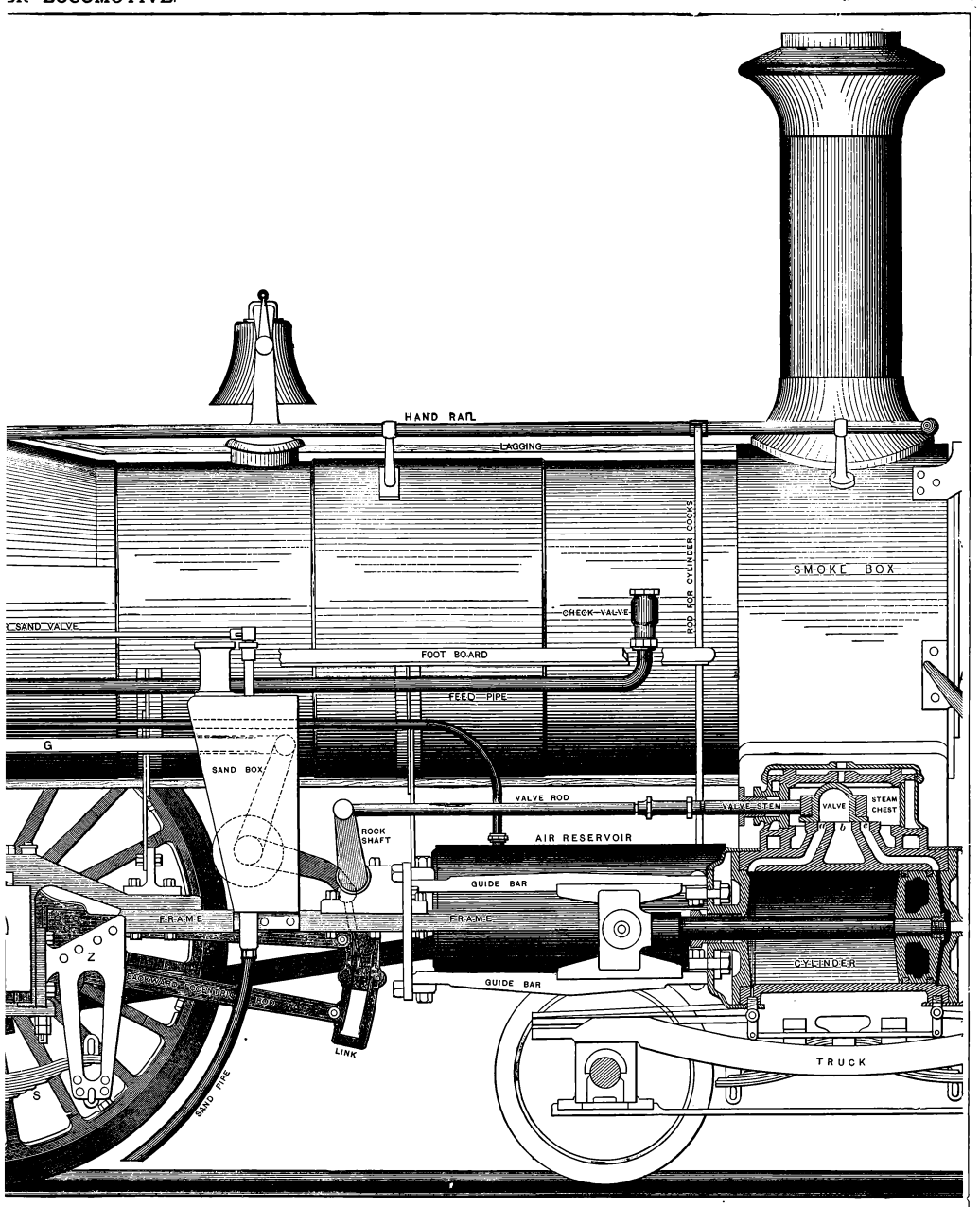

28.

Copyright, 1887, by Charles Scribner's Sons.

short end of which works in a slot *c*, in the upper end of a shaft or spindle *d*. This shaft is inclosed by a tubular shaft S, to which the fulcrum of R is fastened. The tubular shaft has an arm *b*. The reverse lever has two movements, the one to raise the end up, and the other to turn on the axis of the tubular shaft. The arm *b* on the latter is connected by a rod, *f*, with the valves J and H. The lower end of the shaft *d* is connected with a bell crank, *f'* which, in turn, is connected by a rod, *k l*, with the valve I. Therefore, by turning the lever R so as to partly revolve the shaft S, the valves J and H may be opened or closed, and by moving the lever R up or down, the valve I is moved to admit steam to the front or back end of A. To reverse the engine, therefore, the lever R is turned so as to open the valves J and H. This opens communication between the opposite ends of B, and H admits steam to I. Now, by reversing the end of the reverse lever R, the valve I is moved so as to admit steam to either end of A, the pressure in which will move the reverse gear to the desired position. When this is done, the valves J and H are closed. This prevents the fluid in B from flowing from one end of the cylinder to the other, and thus securely locks the piston B in the position it may happen to be in, and at the same time the valve H shuts off steam from the cylinder A.

The bar K is graduated, as shown in the plan of R, K, to indicate to the locomotive runner the position of the reversing gear.

This apparatus enables the reversing gear to be handled with the utmost facility, and with almost no exertion on the part of the engineer. The engine can be reversed almost instantly, and it can be graduated with the most minute precision.

THE LINK MOTION AND REVERSING GEAR.

The link motion of an American locomotive is shown in Figs. 3329 and 3330. In Fig. 3329 it is shown in full gear for the forward gear, or in other words, so as to place the engine in full power for going ahead.

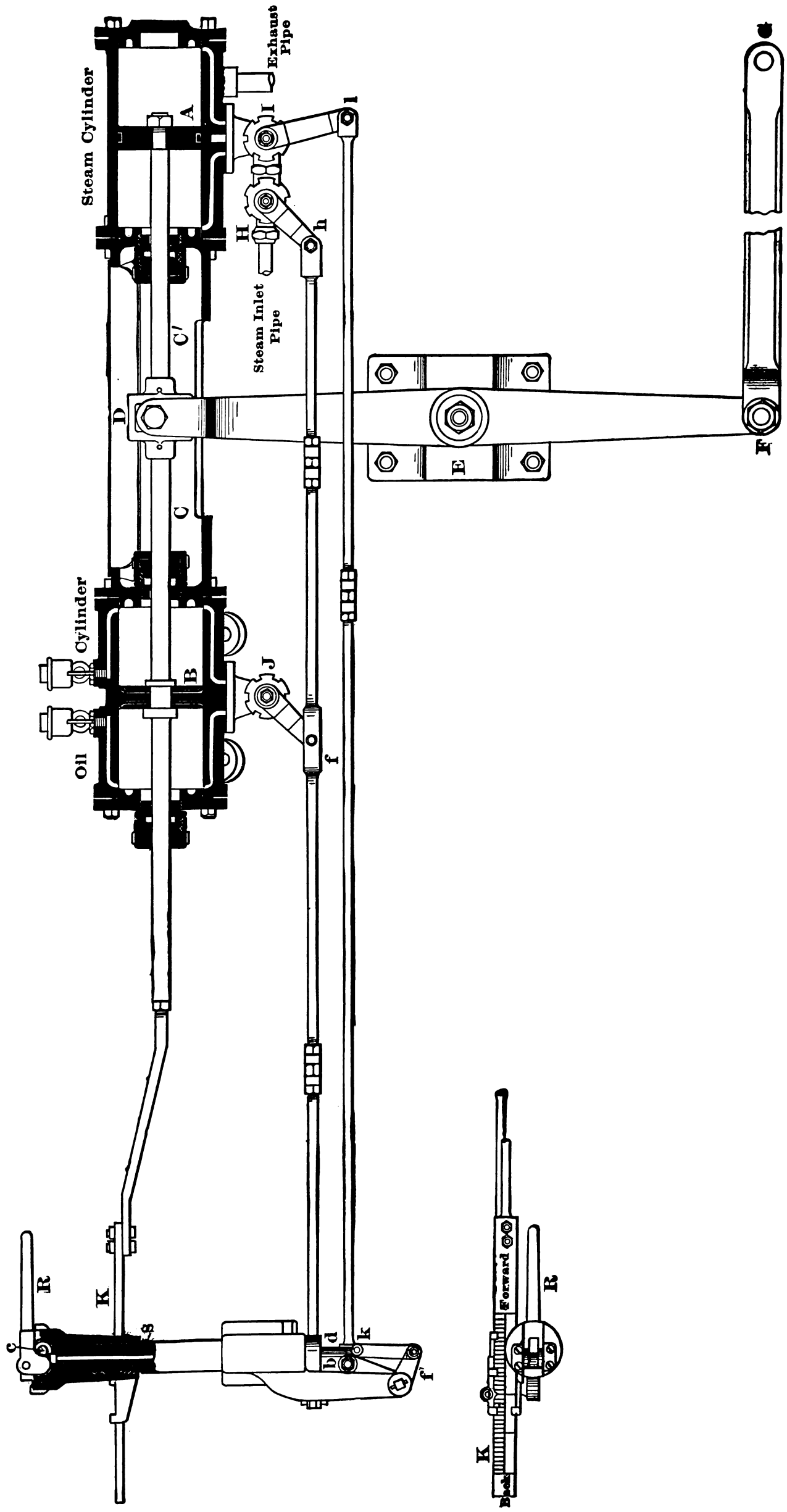

Fig. 3328a.

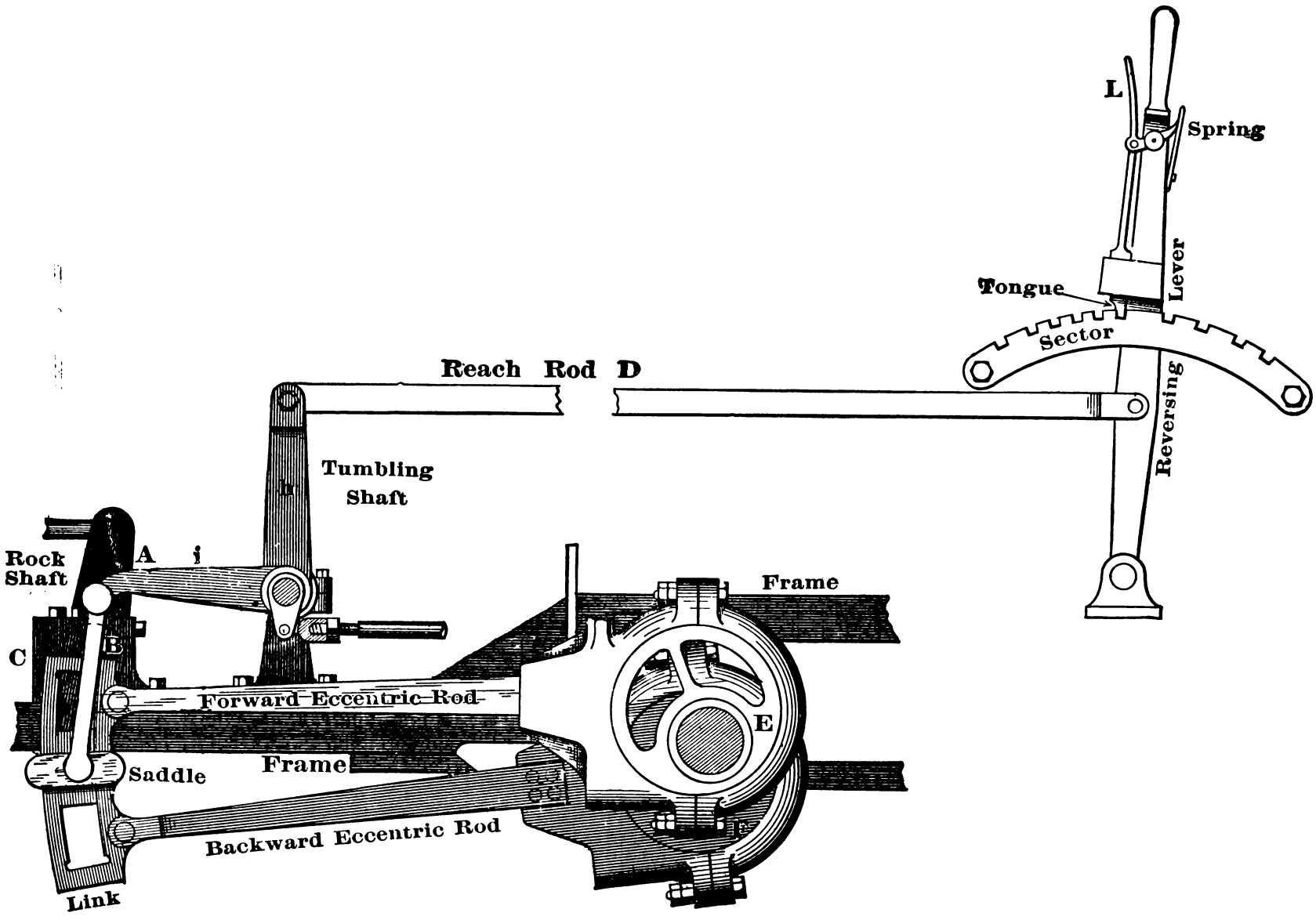

Fig. 3331.

The meaning of the term full power is that, with the link motion in full gear, the steam follows the piston throughout very nearly the full stroke.

In Fig. 3331 the link motion is shown in mid gear, in which position the engine is at its least power, the cut off occurring at its earliest point, and in Fig. 3332 it is shown in full gear for the backward motion.

Referring to Fig. 3329 for the full gear forward, the reversing

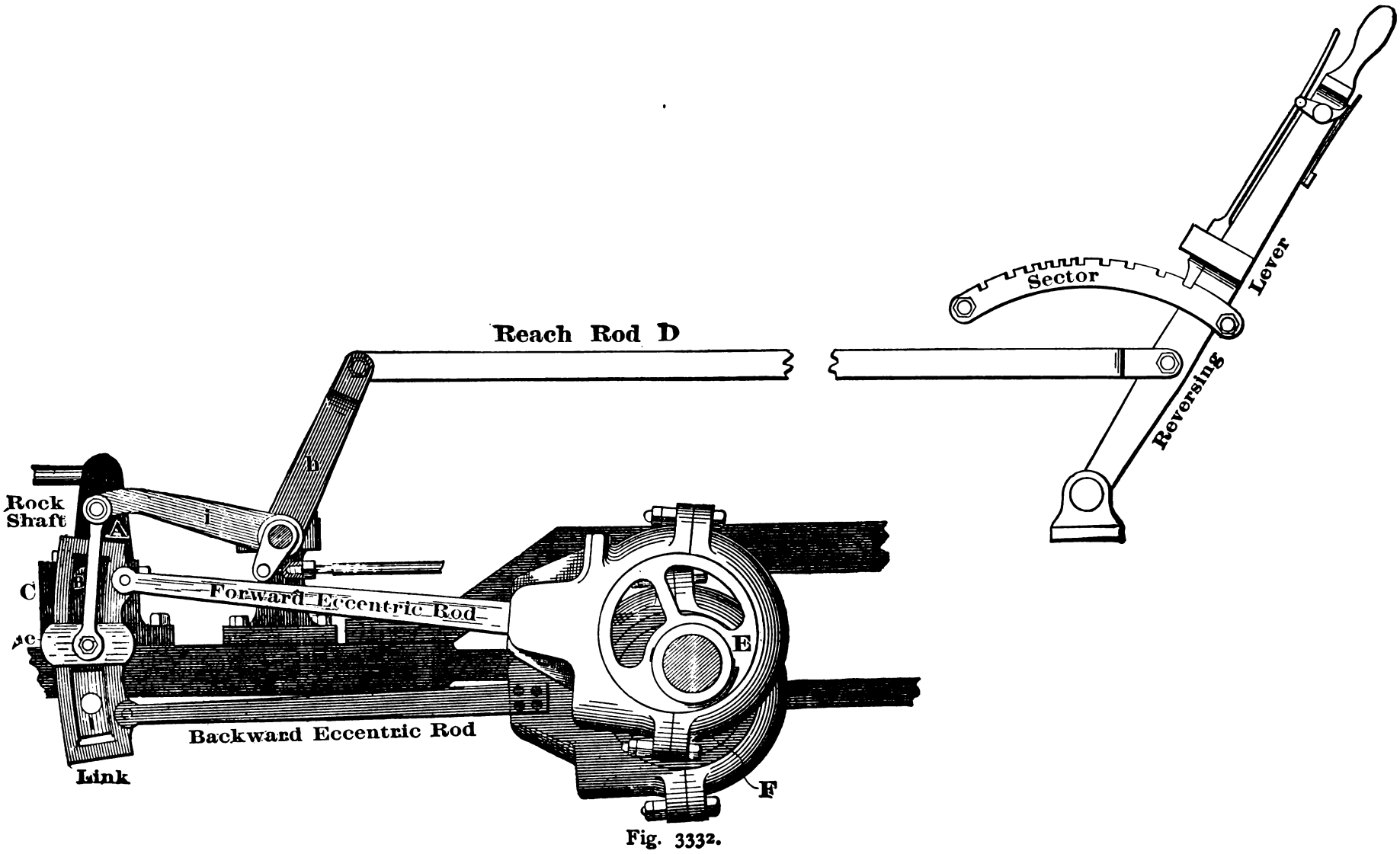

Fig. 3332.

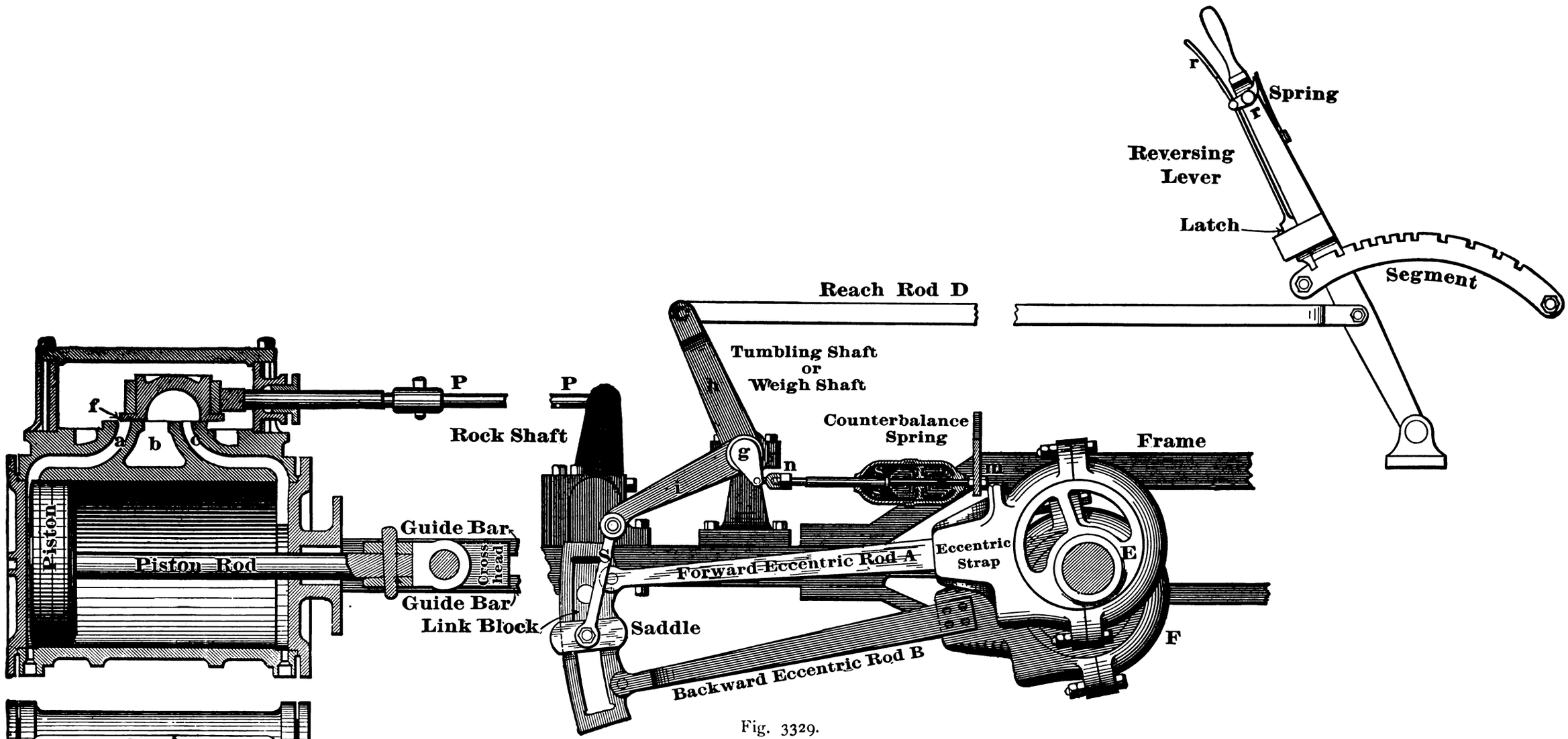

Fig. 3329.

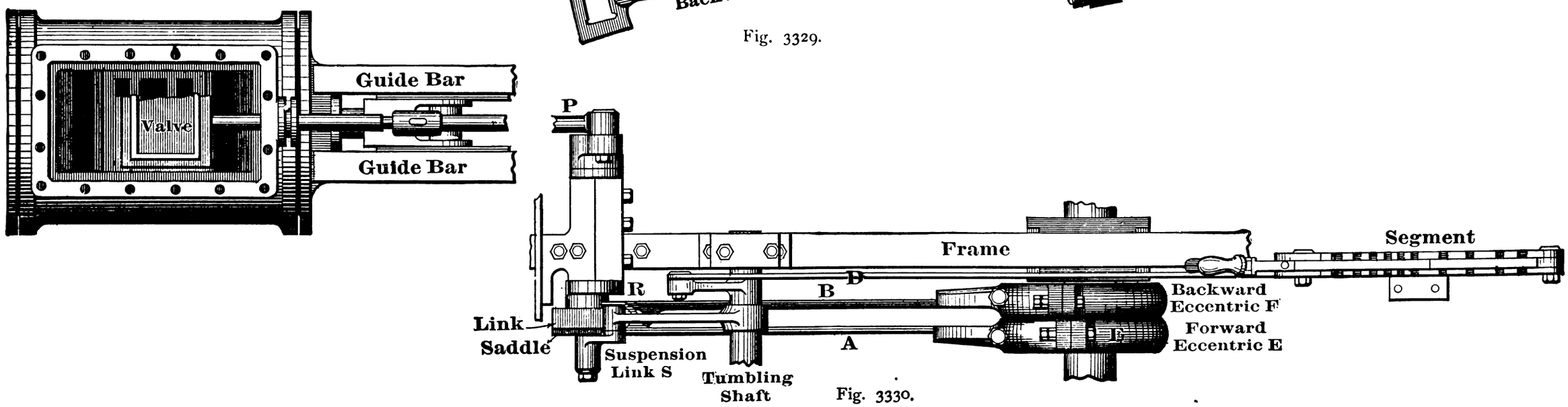

Fig. 3330.

gear proper consists of the reversing lever, the segment, the reach rod, the tumbling shaft, and its counterbalance rod and spring; while the link motion proper consists of the eccentrics and their rods, the link, the link block or die, the suspension link S, the rock shaft and the rod P P. These, however, are terms applied for shop purposes, so as to distribute the work in sections to different men, it being obvious that a *complete* link motion includes the reversing gear, the eccentrics, the link and its block, the rock shaft, the rod P P, and the valve and its spindle or stem. This mechanism, as a whole, may also be called, and is sometimes called, the valve gear, because it is the mechanism or gear that operates the slide valve.

The link motion may be moved from full gear forward to full gear backward or to any intermediate position, whether the engine is running or at rest, but is, when the engine is running, harder to move from full gear forward toward back gear, and easier to move from full gear backward toward mid and forward gears, which occurs because of the friction of the eccentrics in the straps, and it follows that this will be the case to a greater extent in proportion as the revolutions of the eccentrics are increased.

If in a properly constructed link motion we move the link from full gear forward to mid gear when the engine is standing still, and watch the valve, we shall find that the lead or opening at *f* gradually increases; and if we then move it from mid gear to full gear backward, the lead will gradually decrease and finally become the same as it was in full gear forward. The construction of the parts is as follows:

Referring to Fig. 3329 (full gear forward), the segment is fixed in position and the reversing lever is pivoted at its lower end. *r r* is a bell crank, which is pivoted to the reversing lever and to which the latch rod is pivoted at its upper end. The spring acts on the end of *r r*, and thus forces the tongue of the latch into the notches on the sector as soon as the tongue comes fair with the notch and *r r* is released from the hand pressure. As the reversing lever is moved over from full gear forward, the reach rod moves the tumbling shaft, whose lower arm *i* (through the medium of the suspension link S) lifts the link and brings the centre of the saddle pin nearer to the centre of the pin in the link block, which reduces the amount of motion given to the lower arm (B, Fig. 3331) of the rock shaft, and therefore reduces the amount of valve travel, thus causing the point of cut-off to occur earlier in the piston stroke.

The weight of the eccentric rods, the link, suspension link S, and the tumbling shaft arm *i*, is counterbalanced by the counterbalance spring in the box *s s* whose rod attaches to the lug *g* on the tumbling shaft. To regulate the proper amount of counterbalancing, the nuts at *m* are provided, these nuts regulating the amount of tension on the spring *s s*.

The forward eccentric E is that which operates the valve when the link motion is in full gear forward, as in Fig. 3329, and the backward eccentric is that which moves the valve when the link motion is in back gear, as in Fig. 3332.

This occurs because it is the eccentric rod that is in line or nearest in line with the link block that has the most effect in moving the valve. When the link is in full gear, the motion of the valve is almost the same as though there was no link motion and the eccentric rod was attached direct to the rod P P, the difference being so slight as to have no practical importance. This will be seen by supposing that we were to loosen the backward eccentric F upon the shaft and revolve it around the shaft by hand, in which case it would swing the lower end of the link backward and forward with the centre of the link block as a pivot or centre of motion, the forward eccentric rod rising and falling a trifle only, and therefore moving the rock shaft to a very slight amount.

Let it now be noted that the suspension link not only sustains the weight of the link and eccentric rods, but also compels the centre of the saddle pin to swing (as the link is moved by the eccentrics) in an arc of a circle of which the centre is the upper end of the suspension link. Suppose, therefore, that the backward eccentric rod was to break, or was taken off and the engine could still run forward, but no motion would be given to the valve, if the link was placed in mid gear, because in that case the forward eccentric rod would simply swing the link on the centre of the link block as a pivot. Now, suppose the forward eccentric rod was to break or be taken off, and the engine may be made to go ahead by setting the backward eccentric fair with the forward eccentric and connecting its rod to the upper end of the link.

Similarly, if the engine was running with the smoke stack toward the train and the link motion in backward gear, and the backward eccentric rod was to break, we may take it off, shift the forward eccentric so that it comes fair or stands in line with the backward eccentric and connect its rod to the lower end of the eccentric and with the link motion in backward gear, the engine would still haul the train.

If the reach rod was to break, the tumbling shaft could be held in position by loosening the cap bolts of the tumbling shaft journal and putting between the cap and the tumbling shaft journal a piece of metal, which, on bolting up the cap screws again, would firmly grip the shaft and prevent it from moving.

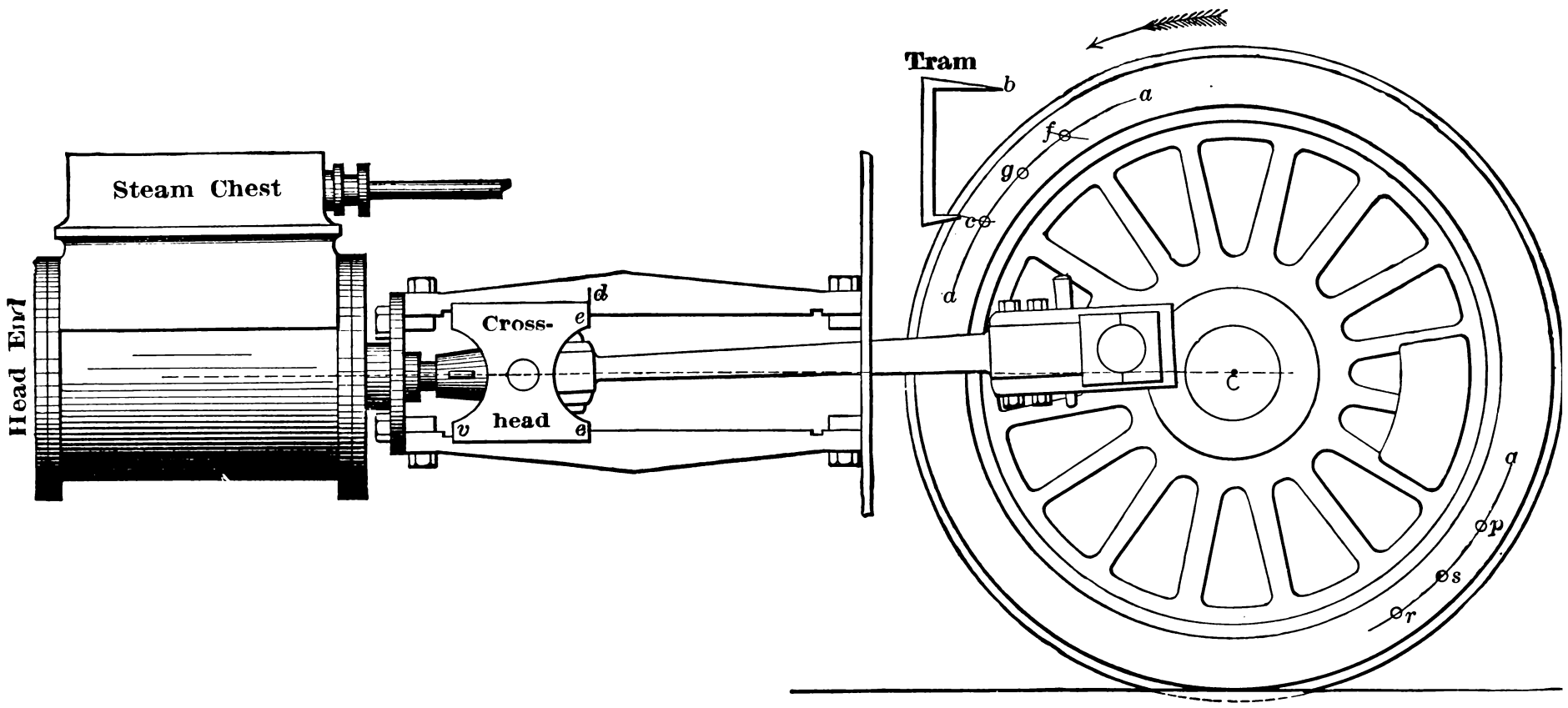

Fig. 3333.

SETTING THE SLIDE VALVES OF A LOCOMOTIVE.—The principles of designing, and the action of D valves, such as are used upon locomotives, have been so thoroughly explained with reference to stationary engines, that there is no need to repeat them in connection with the locomotive, and we may proceed to explain how to set the valves of a locomotive. In doing this, there are two distinct operations, one of which is to place the crank alternately exactly on its respective dead centres, and the other is to set the position of the eccentrics, and get the eccentric rod of the proper length. These two operations comprise all that require to be done to set the valves, under ordinary and workmanlike conditions; hence we may proceed at once to explain the operation.

The first thing to be done is to put the crank pin on a dead centre, and it does not matter which one.

In Fig. 3333 it is supposed that the piston is to be at the head end of the cylinder when the crank is on its corresponding dead centre.

The first thing to do is to put the reversing gear in full gear forward, so as to set the forward eccentric, and see if its rod is of proper length.

The next thing to do is to move the wheel so that the crank pin is nearly on the dead centre, and then take a tram (such as shown in the figure), pointed at each end, and mark on the splash plate, or any other convenient place, a centre punch dot in which the point *b* of the tram can rest. Next, from the centre of the axle as a centre, mark arcs or portions of circles *a*, *a*. This being done, point *b* of the tram is rested in the centre punch dot before referred to, and with the other end a line *c* is marked, a straight edge is then rested against the ends *e e* of the cross head, and a line *d* is marked on the guide bar, this line being exactly even or fair with the end *e e* of the cross head.

We then move the wheel in the direction of the arrow, and as soon as we begin to do so, the cross head will move to the left and away from the line *d* on the guide bar. But as soon as the crank pin has passed its dead centre, the cross head will begin to move to the right, and as soon as the end *e e* comes again exactly in line with the line *d* marked on the guide bar, we must stop moving the wheel, and again resting the point *b* of the tram in the centre punch mark before mentioned, we move its other end so as to mark a second line, which will be the line or arc *f*.

The next thing to do is to mark a fine centre punch dot, where *c* and *f* cross the arc or line *a*, and then find the point *g* midway between *f* and *c*, and mark a fine centre punch mark there. This being done, we must move the wheel back into the position it occupies in the figure, and then slowly move it in the direction of the arrow, until with the end *b* of the tram resting in the centre punch dot, the other end of the tram will fall dead into the centre punch dot at *g*, at which time the crank pin will be exactly on the dead centre.

During this part of the process we have nothing to do with anything except getting the crank pin on the dead centre, but there is one point that requires further explanation, as follows:

In this operation we have first put the crank on one side of the dead centre and then put it to the same amount on the other side of the dead centre, both being improper positions; but by finding the mean or mid position between the two, we have found the proper position. In doing so, however, we have moved the wheel, the wheel has moved the connecting rod, and the connecting rod has moved the piston. But in the actual running of the engine, this order of things will be reversed; for the steam will move the piston, the piston will move the connecting rod, and the connecting rod will move the crank and therefore the wheel.

The difference between the two operations is this: Suppose there is lost motion or play between the connecting rod brasses and the crank pin, or between the connecting rod brasses and the cross head pin, and then if we move the wheel in the direction denoted by the arrow, we take up this lost motion, so that if the tram was fair with the centre punch at *g* and steam was admitted to the piston, then there would be no lost motion to take up, and as soon as the piston moved the crank pin would move. But if we moved the wheel in the opposite direction to that denoted by the arrow, then we are placing any lost motion there may be in the opposite direction, and if steam were turned on, the piston and connecting rod might move before the crank and wheel moved.

In which direction the wheel should be moved while placing the crank on the dead centre depends upon the condition of the engine, as will be explained presently, the assumption being at present that the engine is in thorough good order, in which case the wheel should (while placing the crank on the dead centre) be moved in the direction of the arrow in the figure.

The object is under all conditions to bring the working surfaces to bear (while setting the valve) in the same way as they will bear when the engine is actually at work.

Having placed the crank on the dead centre, and thus completed the first operation in valve setting, we may turn our attention to the second, viz., correcting the lengths of the eccentric rods and setting the valve lead. Almost all writers who have dealt with this part of the subject have fallen into a very serious error, inasmuch as they began the operation by what they call *squaring* the valve. This means so adjusting the length of the eccentric rod that the valve will travel an equal distance each way from its mid position, so that if the engine wheel is revolved and the extreme positions of the valve marked by a line, these lines will measure equally from the edges of the steam ports, or, what is the same thing, from the centre of the cylinder exhaust port. This procedure is entirely erroneous, because, on account of the angularity * of the eccentric rod, the valve cannot, if equal lead is to be given to the valve, travel equally beyond the two steam ports, and if the eccentric rods are so adjusted for length as to *square the valve*, they are made wrong.

The valve lead, and the lead only, it is that determines the length of the eccentric rods. Suppose that, as is generally the case, the lead is to be equal, or, in other words, that there is to be as much valve lead when the piston is at one end of the cylinder as there is when it is at the other, and if we make the eccentric rods of such a length that the valve travels equally on each side of the steam port, there will be less lead at the head end port than there is at the crank end port. The proper method, therefore, is (as soon as the crank is on the dead centre and the link in full gear, as in Fig. 3334) to set the eccentric so as to give the desired amount of lead, and then give the wheel a half revolution, the lower end of the tram falling into the centre punch dot at *s*, when the crank pin will be on its other dead centre and ready for the lead to be measured again. If the lead is equal at each end, one eccentric rod is of the right length, and all we have to do is to set the eccentric so that the right amount of lead is given.

We now turn our attention to the backward eccentric and its rod, putting the reversing lever in full gear for the backward motion, and putting the crank on the respective dead centres, and testing the lead for both ports as before, and when the required amount of valve lead is given the valve setting is complete.

In some practice the wheel is blocked up on the pedestal guides while setting the valves, but a more correct method is to let the engine rest on the rails and push it back and forth with a crowbar to revolve the wheels when putting the crank pin on the dead centre. The best thing to measure the lead with is a wooden or leaden wedge having but a slight degree of taper, as say $\frac{3}{16}$ or $\frac{1}{4}$ inch in a length of four inches. We have in this example of valve setting supposed the parts to be of the proper dimensions, as they would be in a new engine or in an engine that had been running and merely had a new valve or a new eccentric put in.

But suppose the notches were not cut in the sector, and we have then to mark them off while setting the valves. All the difference that this makes to the operation is that we must clamp the reversing lever to the sector while setting the valve, taking care to so clamp it that there is the same space between the top end of the link block and the end of the link slot in the full forward gear as there is between the bottom end of the link block and the end of the link slot when the engine is in full backward gear. In this connection it is, however, to be remarked that when the link is in full gear, either forward or backward, and the crank is on the dead centre, the link block is not at the end of its motion toward the end of the link slot; hence it is a good plan to move the wheels around and to so regulate the length of the reach rod and the position of the reversing lever on the sector, that when the link block is at the highest point in the link slot for the forward gear and at the

* See page 375, Vol. II., for the meaning of angularity.

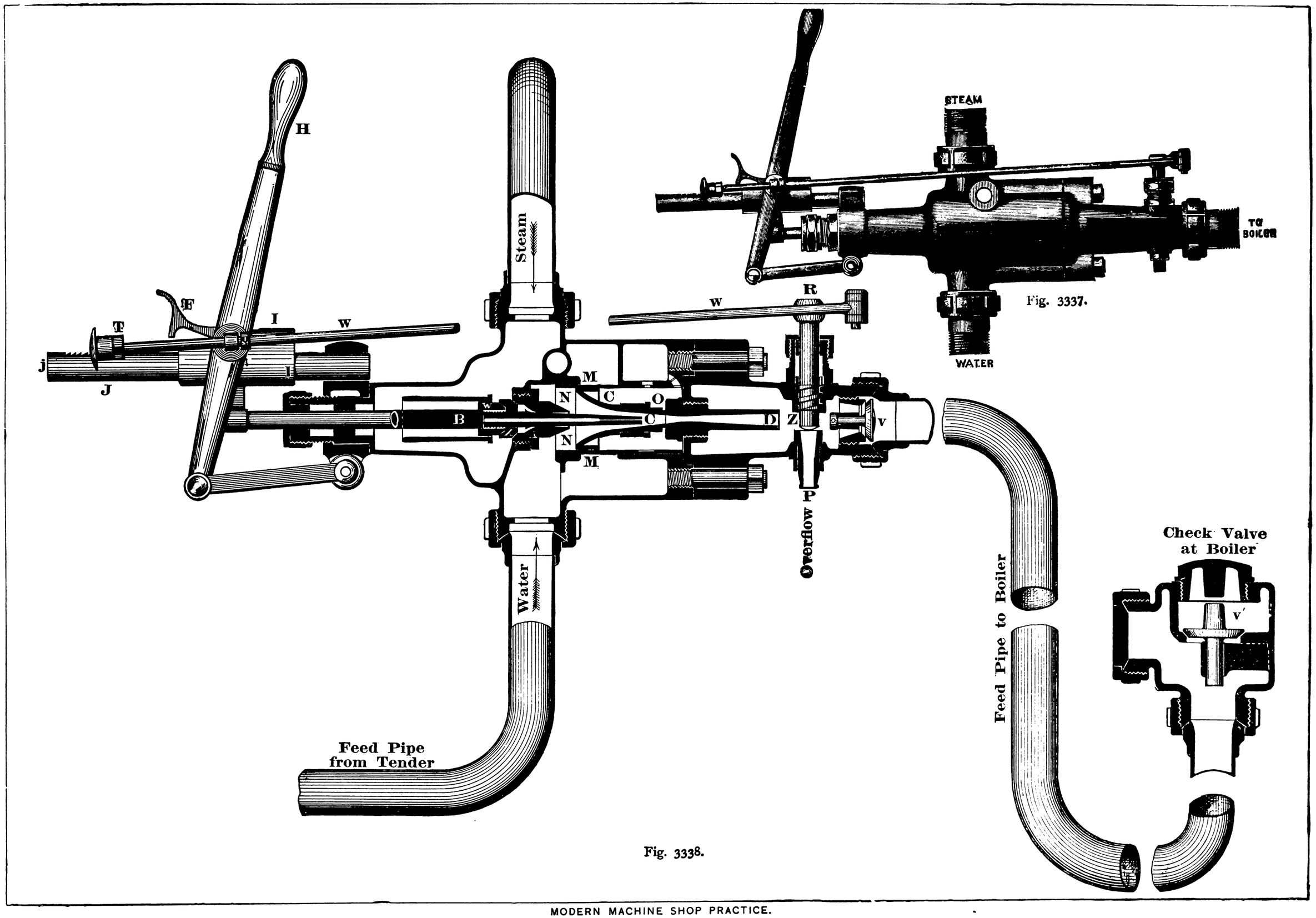

Fig. 3337.

Fig. 3338.

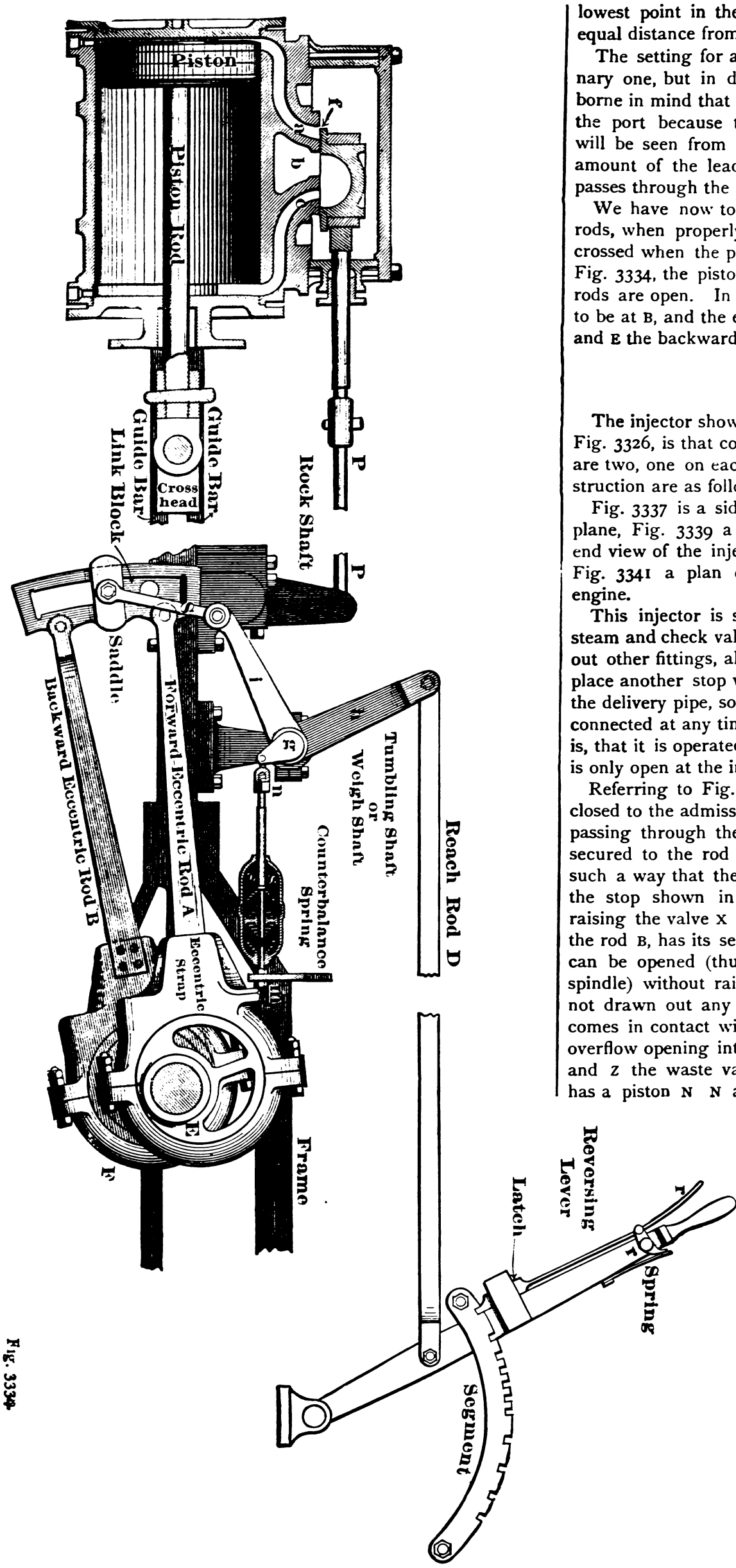

Fig. 3334

lowest point in the link slot for the backward gear, it comes an equal distance from the end of the link slot.

The setting for an Allen valve is the same as that for an ordinary one, but in determining the amount of the lead it is to be borne in mind that it is virtually twice as much as it measures at the port because there are two openings for the steam. This will be seen from Fig. 3335, in which the valve is open to the amount of the lead at *f*. But the steam also enters at *e*, and passes through the port in the valve and into steam port *a*.

We have now to call attention to the fact, that the eccentric rods, when properly connected, are, in an American locomotive, crossed when the piston is at the crank end of the cylinder. In Fig. 3334, the piston is at the head end of the cylinder, and the rods are open. In Fig. 3336, however, the crank pin is supposed to be at B, and the eccentric rods are crossed, F being the forward and E the backward eccentric.

THE INJECTOR.

The injector shown in the general view of a freight locomotive, Fig. 3326, is that constructed by William Sellers & Co., and there are two, one on each side of the engine. The details of its construction are as follows:

Fig. 3337 is a side elevation, Fig. 3338 a section on a vertical plane, Fig. 3339 a section on a horizontal plane, Fig. 3340 an end view of the injector at the right-hand side of the engine, and Fig. 3341 a plan of the injector on the left-hand side of the engine.

This injector is self-contained, or in other words, it has both steam and check valves, so that it can be connected directly without other fittings, although, of course, it is generally desirable to place another stop valve in the steam pipe, and a check valve in the delivery pipe, so that the injector can be taken to pieces or disconnected at any time. Another important feature of this injector is, that it is operated by a single handle, and that the waste valve is only open at the instant of starting.

Referring to Fig. 3338, A is the receiving tube, which can be closed to the admission of steam by the valve X. A hollow spindle passing through the receiving tube into the combining tube is secured to the rod B, and the valve X is fitted to this spindle in such a way that the latter can be moved a slight distance (until the stop shown in the figure engages with valve X) without raising the valve X from its seat. A second valve W, secured to the rod B, has its seat in the upper side of the valve X, so that it can be opened (thus admitting the steam to the centre of the spindle) without raising the valve X from its seat, if the rod B is not drawn out any farther, after the stop on the hollow spindle comes in contact with the valve X. D is the delivery tube, O an overflow opening into space C, V the check valve in delivery pipe, and Z the waste valve. The upper end of the combining tube has a piston N N attached to it, capable of moving freely in a cylindrical portion of the shell M, M, and the lower end of the combining tube slides in a cylindrical guide formed in the upper end of the delivery tube.

The rod B is connected to a cross head which is fitted over the guide rod J, and a lever H is secured to the cross head. A rod W, attached to a lever on the top end of the screw waste valve, passes through an eye that is secured to the lever H; and stops T, Q control the motion of this rod, so that the waste valve is closed when the lever H has its extreme outward throw, and is opened when the lever is thrown in so as to close the steam valve X, while the lever can be moved between the positions of the stops T, Q without affecting the waste valve. A latch F is thrown into action with teeth cut in the upper side of the guide rod J, when the lever H is drawn out to its full extent and then moved back; and this click is raised out of action as soon as it has been moved in far enough

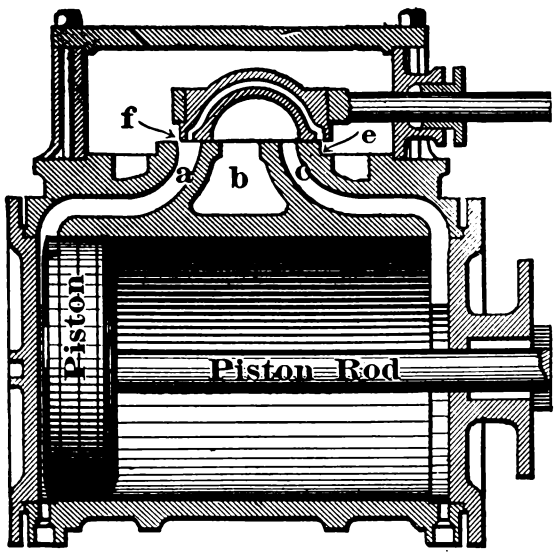

Fig. 3335.

to pass the last tooth on the rod J. An air vessel is arranged in the body of the instrument, as shown in the figure, for the purpose of securing a continuous jet when the injector and its connection are exposed to shocks, especially such as occur in the use of the instrument on locomotives.

The manipulation required to start the injector is exceedingly simple—much more so in practice, indeed, than it can be rendered in description. Moving the lever H until contact takes place between valve X and stop on hollow spindle, which can be felt by the hand upon the lever, steam is admitted to the centre of the spindle, and, expanding as it passes into the delivery tube D and waste orifice P, lifts the water through the supply pipe into the combining tube around the hollow spindle, acting after the manner of an ejector or steam siphon. As soon as solid water issues through the waste orifice P, the handle H may be drawn out to its full extent, opening the steam valve X and closing the waste valve, when the action of the injector will be continuous as long as steam and water are supplied to it.

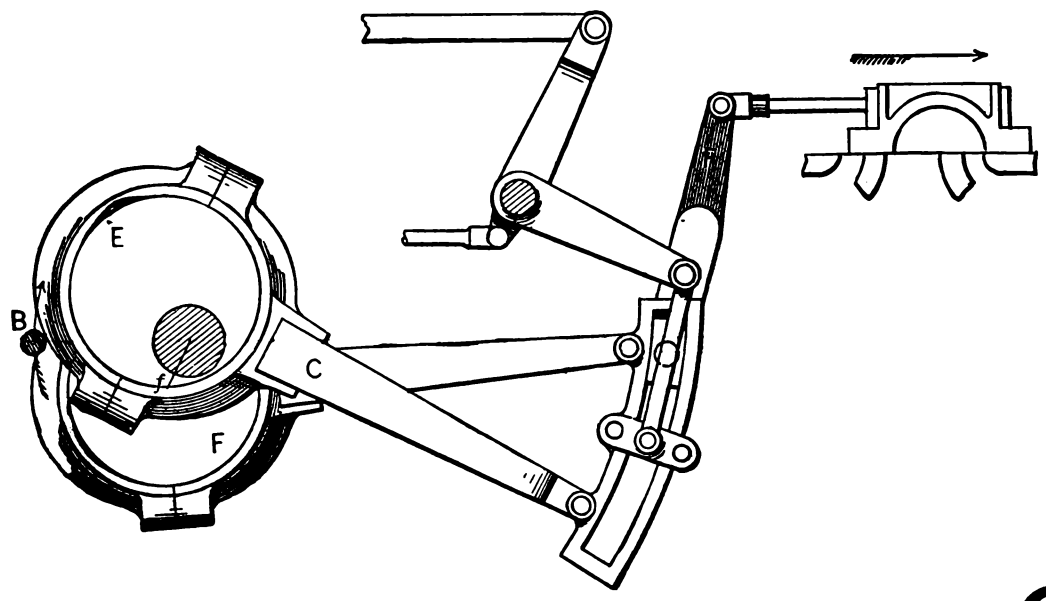

Fig. 3336.

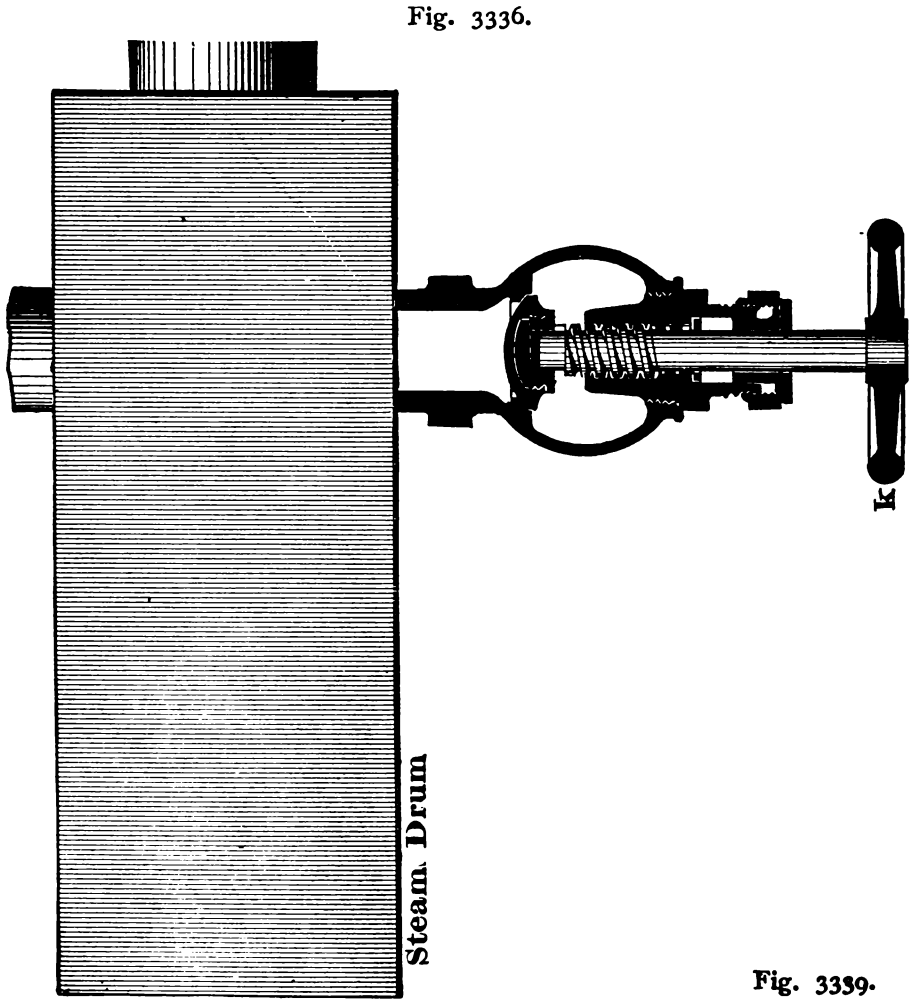

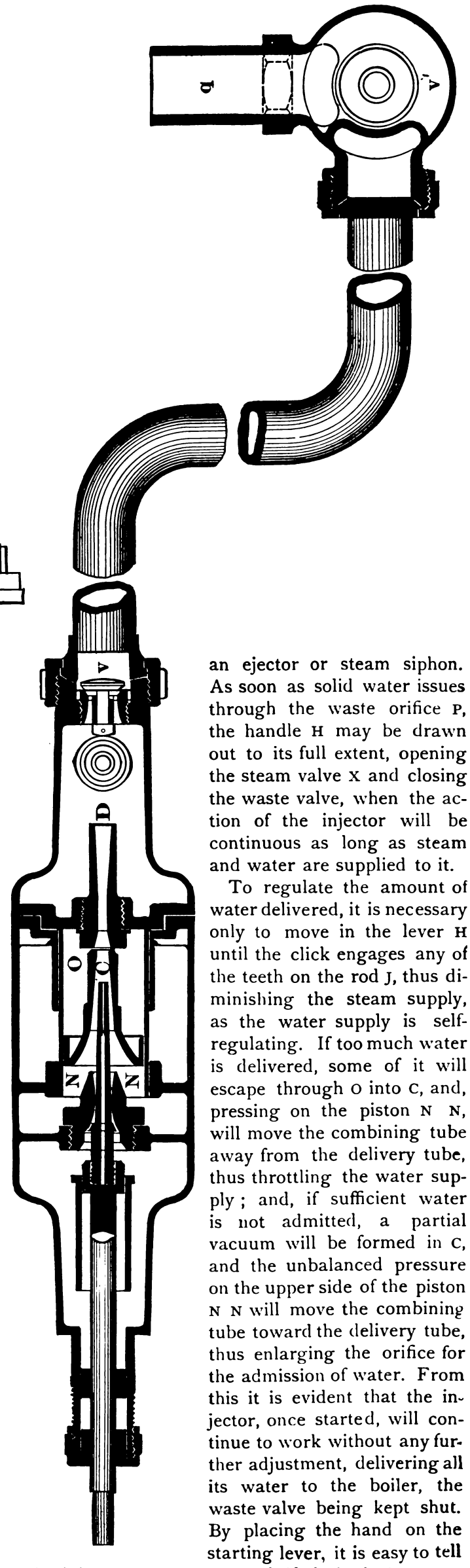

Fig. 3339.

To regulate the amount of water delivered, it is necessary only to move in the lever H until the click engages any of the teeth on the rod J, thus diminishing the steam supply, as the water supply is self-regulating. If too much water is delivered, some of it will escape through O into C, and, pressing on the piston N N, will move the combining tube away from the delivery tube, thus throttling the water supply; and, if sufficient water is not admitted, a partial vacuum will be formed in C, and the unbalanced pressure on the upper side of the piston N N will move the combining tube toward the delivery tube, thus enlarging the orifice for the admission of water. From this it is evident that the injector, once started, will continue to work without any further adjustment, delivering all its water to the boiler, the waste valve being kept shut. By placing the hand on the starting lever, it is easy to tell whether or not the injector is working; and, if desired, the waste valve can be opened momentarily by pushing the rod W, a knob on the end being provided for the purpose.

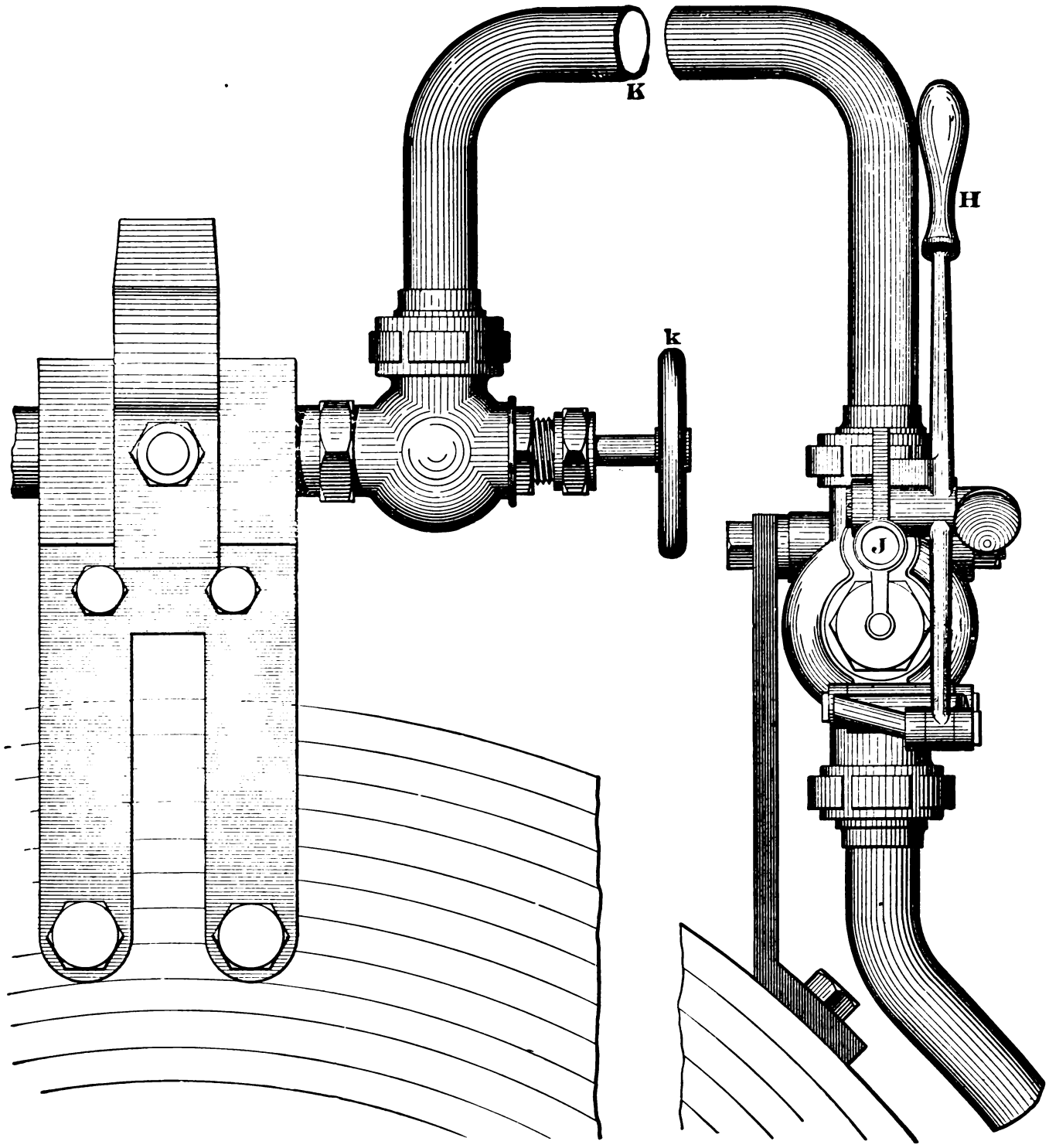

Fig. 3340.

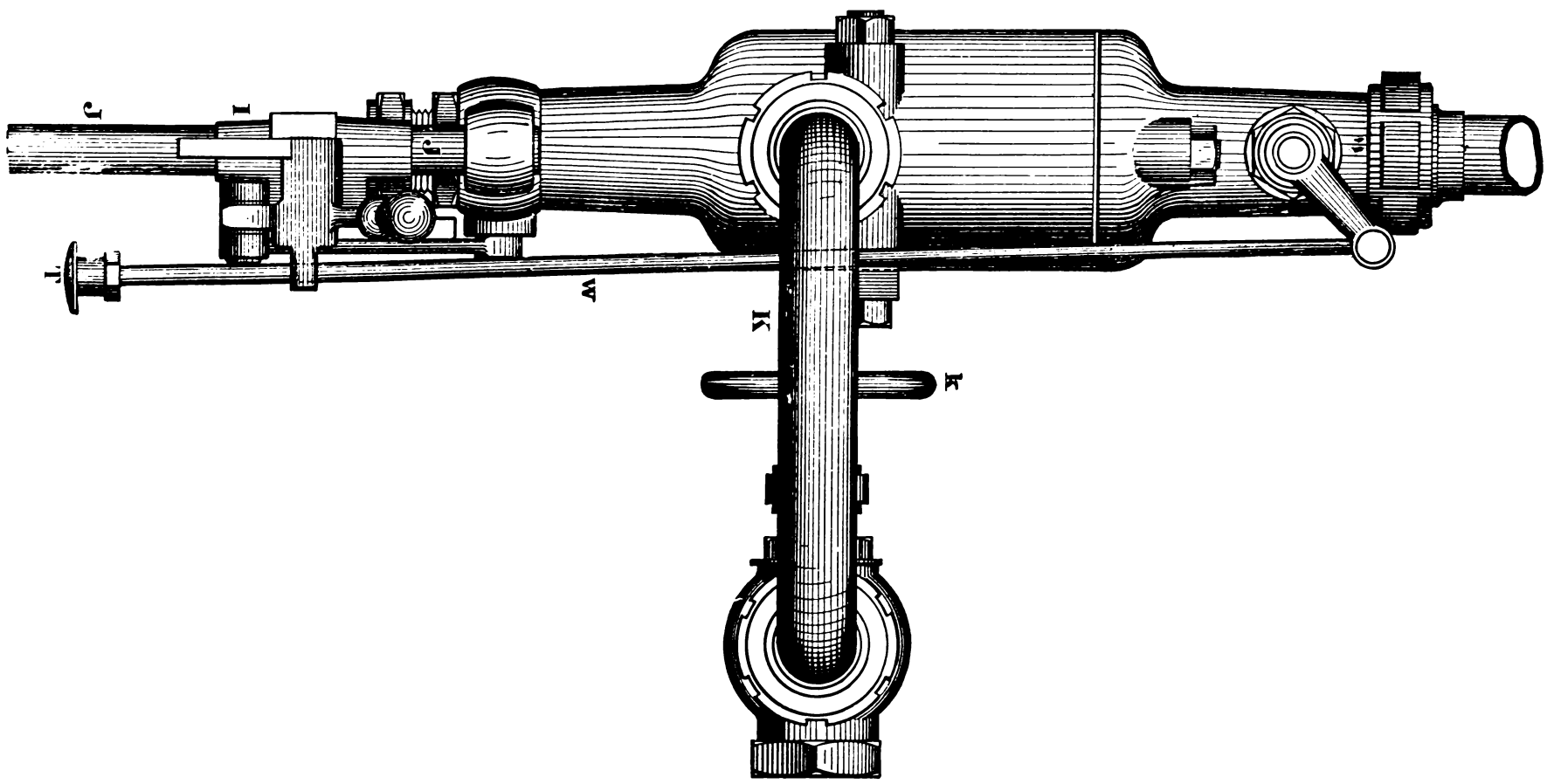

Fig. 3341.

THE WESTINGHOUSE AUTOMATIC AIR BRAKE.

Figs. 3342, 3343 and 3344 represent the Westinghouse automatic air brake applied to an engine and tender, and in the following figures details of the construction of various parts are shown.

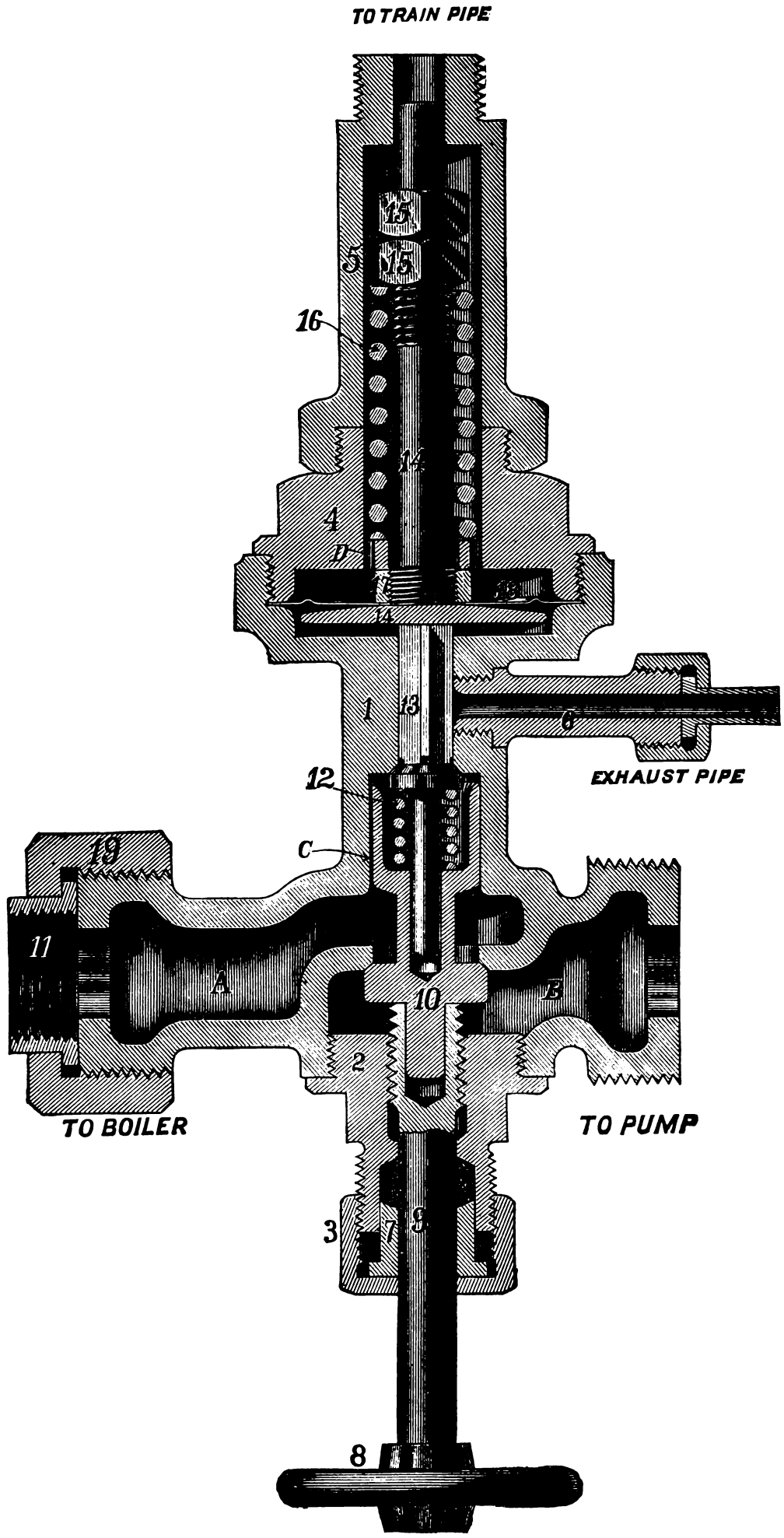

Fig. 3345.

The pump governor, which is shown at G in Fig. 3326, of a modern freight locomotive, is shown in section in Fig. 3345.

The pump governor is employed for the purpose of cutting off the supply of steam to the pump when the air pressure in the train pipe exceeds a certain limit, say 70 lbs. per square inch.

Its operation is as follows:

When valve 10 is (by means of nand wheel 8) screwed home to its seat the steam is entirely shut off from the steam cylinder, but by operating wheel 8 to unscrew spindle 9, valve 10 is permitted to open and let the steam pass through A and B to the steam cylinder which operates, forcing air into the reservoir and thence into the train pipe. A pipe from the train pipe connects to the upper end of the pump governor, hence air from the train pipe passes around the stem 14 to the upper side of the thin diaphragm 18, which is held in its position by the spring 12 with a force sufficient to enable it to resist, without moving, a pressure of 70 lbs. per square inch. But when the pressure exceeds 70 lbs. per square inch it forces the diaphragm down, pushing down valve 13 and allowing the steam in A to pass up through valve 13 and out of the exhaust pipe

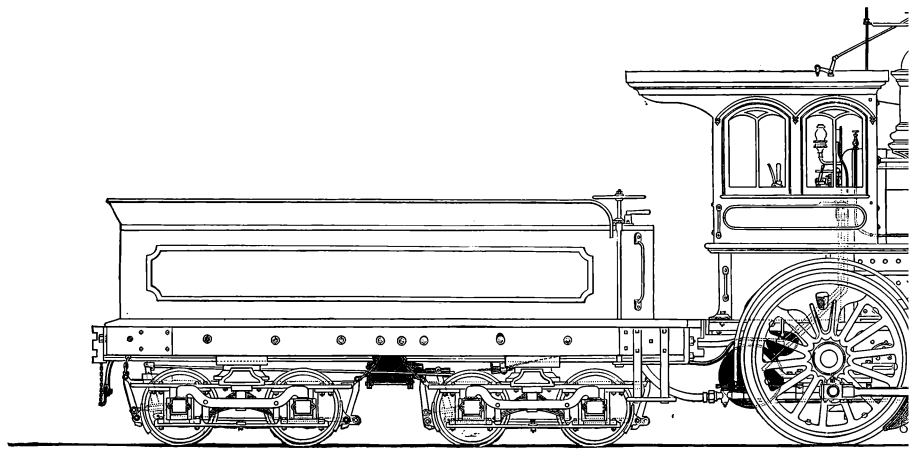

Fig. :

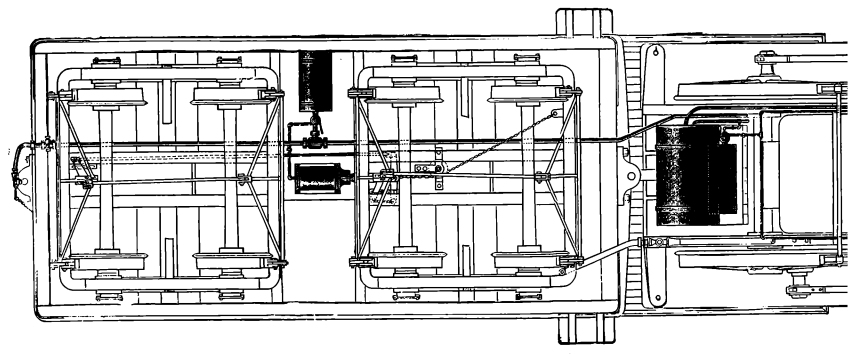

Fig. 334.

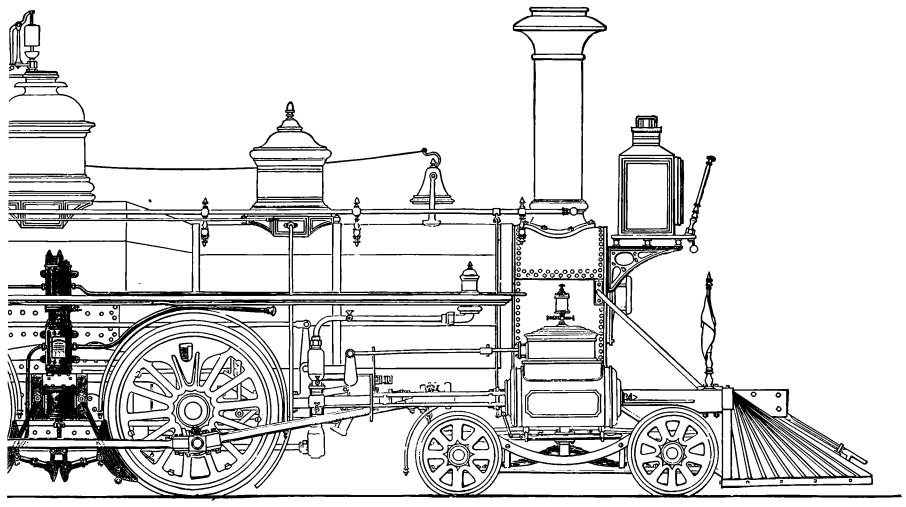

3342.

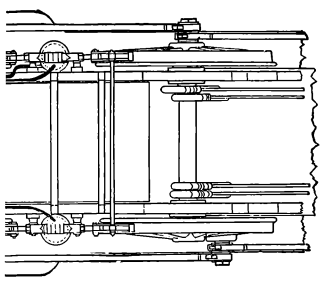

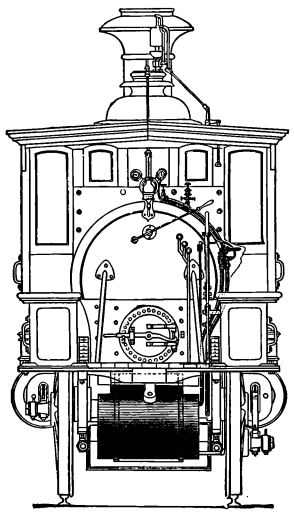

Fig. 3344.

6. The steam pressure in A being thus reduced, that in B acts on the under side of the valve, causing it to rise and seat itself and thus cut off the supply of steam to the pump.

When the pressure in the train pipe is diminished by the brakes being applied, the diaphragm is restored to the position it occupies in the figure by the action of the spring 16. Then valve 13 is seated by the spring 12, and the steam pressure accumulates on the upper end of valve 10, forcing it down and letting the steam from A into B and thence into the steam cylinder, starting it into action, which continues until the pressure in the train pipe exceeds 70 lbs. per square inch.

The use of this governor not only prevents the carrying of an excessive air pressure in the train pipe, which may result in entirely preventing the wheels from revolving and causing a flat place to wear on the wheel tire, but it also causes the accumulation of a surplus of air pressure in the main reservoir, while the brakes are applied, which insures the release of the brakes without delay. It also obviates the unnecessary working of the pump when the desired air pressure has been obtained.

A sectional view of the steam and air cylinders is shown in Fig. 3346, the construction being as follows:

Steam is distributed to the steam cylinder by means of a piston valve, composed of three pistons, marked 16, 14, and 20 respectively, the steam entering between pistons 16 and 14, and, in the positions in which the parts occupy in the figure, steam can pass through the bushing 18 and beneath the steam piston 7, propelling it upwards until the bottom of the hole in its piston rod strikes the end of rod 12, and raises it and valve 13. The chamber 23, in which valve 13 works, receives steam through a suitable port from the steam space between valves 14 and 16; and the steam from chamber 23, it is that (in the positions the parts occupy in the figure), acting on the area of the large valve piston 20, holds the valve down against the pressure on the bottom face of piston 14 of the valve. As soon, however, as the piston rod 7 strikes and raises rod 12 and valve 13, the steam is exhausted from the top of piston 20 of the valve, and the steam beneath piston 14 of the valve raises the valve, opening the lower port in the sleeve 18 for the exhaust, and piston 14 admits steam to the upper side of the steam piston 7. The construction of the air cylinder differs somewhat from that shown in the freight locomotive, Fig. 3326, this air pump corresponding with that shown on the engine and tender, Fig. 3342. A detail list of the parts may be given as follows;

No.	
2.	Steam cylinder head (with reversing cylinder, piston, and valve bushes).
3.	Steam cylinder with main valve and bushes).
4.	Centre piece.
5.	Air cylinder (with lower discharge valve).
6.	Air cylinder head.
7.	Steam piston and rod.
8.	Air piston.
9.	Piston rings.
10.	Steam piston plate.
11.	Steam piston bolt.
12.	Reversing rod.
13.	Reversing valve.
14.	Piston valve.
15.	Piston valve rings.
16.	Piston valve rings.
17	Upper valve bushing.
18.	Lower valve bushing.
19.	Reversing piston casing.
20.	Reversing piston.
21.	Piston rings.
22.	Reversing cylinder cap.
23.	Reversing valve bush.
24.	Reversing valve cap.
25.	Piston rod nut.
26.	Piston packing gland.
27.	Piston packing nuts.
28.	Packing glands.
29.	Right chamber cap.
30.	Left chamber cap.
31.	Air valve bushing.
32.	Air valve.
33.	Air valve.
34.	Air valve.
35.	Delivery union.
36.	Exhaust steam outlet.
40.	Steam cylinder gasket.
42.	Top air-pump gasket.
43.	Bottom air-pump gasket.
44.	Waste water pipe.
46.	Exhaust union stud.
49.	Air exhaust union stud.

A side view of the driving wheel brakes is shown in Fig. 3347 and an end view in Fig. 3348. The brakes are, it is seen, suspended by links so that their weight tends to keep them from the

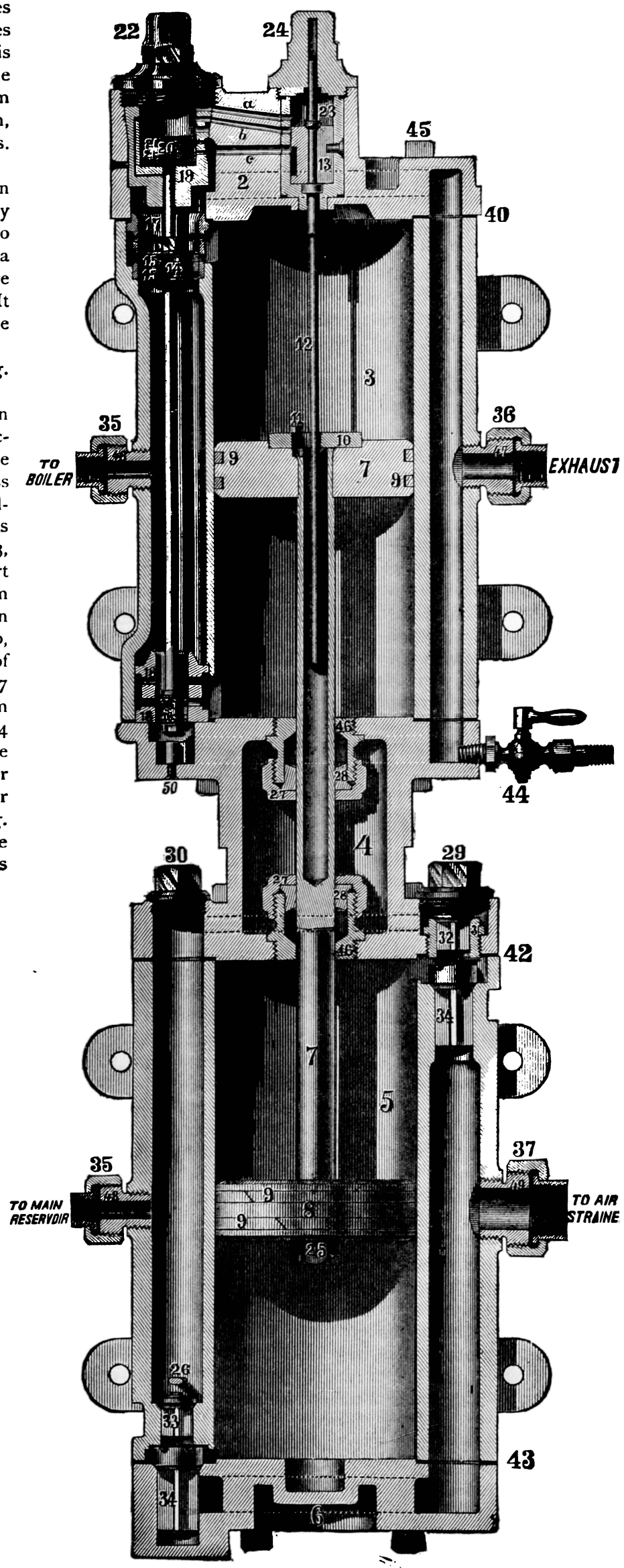

wheels. The brake piston rod carries at its end two links which attach to the arms attached to the brakes. The ends of these arms being curved roll together, the arrangement forming in effect a rolling toggle joint. The construction of the piston of the driving wheel brake is shown in Fig. 3349. The piston is made air tight by leather packing indicated by 11, held out by a spring 12. The piston rod packing, 7, is leather held in place by the cap 6 and the spring 8. The air for operating the brake enters below the piston.

LOCOMOTIVE RUNNING.

The engineer's duty in running a locomotive is more arduous and requires more watchfulness than any other engine running, because of the peculiarities attending it. In the first place, the jolts and jars to which the engine is subject are liable to cause nuts, pins, etc., to come loose, and some of the parts to become disconnected and cause a breakdown of the engine.

the track as it is to be with the engine, and there is no field of engine driving or running in which more scope is permitted to the engineer to exercise judgment and skill in his management, so as to effect economy in fuel consumption.

The quality and size of the coal is another element that requires attention and observation on the part of the engineer, in order that his train may keep its time and the fuel consumption be kept down.

GETTING THE ENGINE READY.

The first thing to be done in getting ready for a trip is to see that there is sufficient water in the boiler, so that if there is not, there is time to supply the deficiency.

If the boiler is cold it may be that the condensation of the steam in cooling may have left a partial vacuum in the boiler, and it will be necessary in that case to open the top gauge cock and let in air so that the water will come to its proper level in the gauge glass.

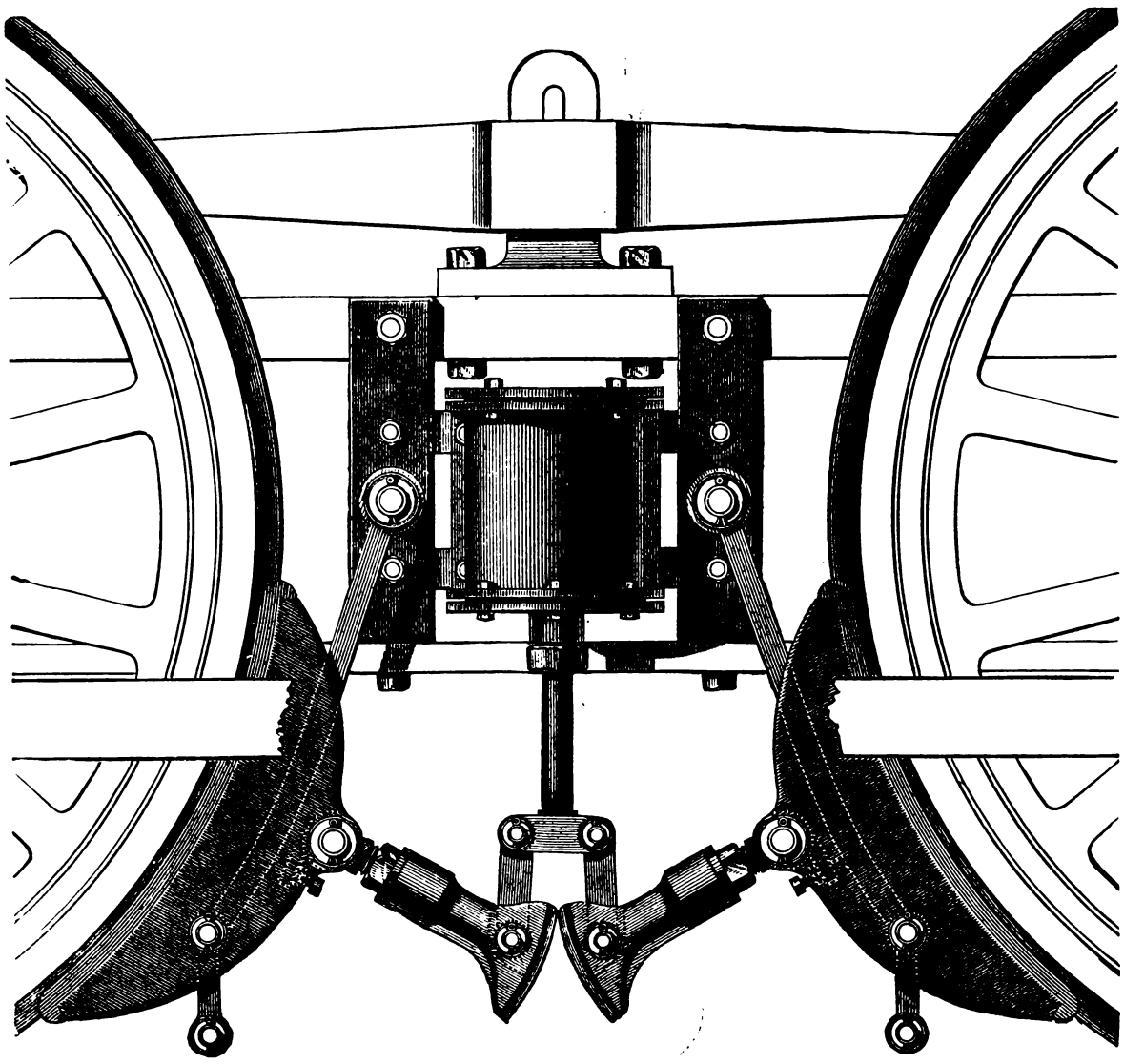

Fig. 3347.

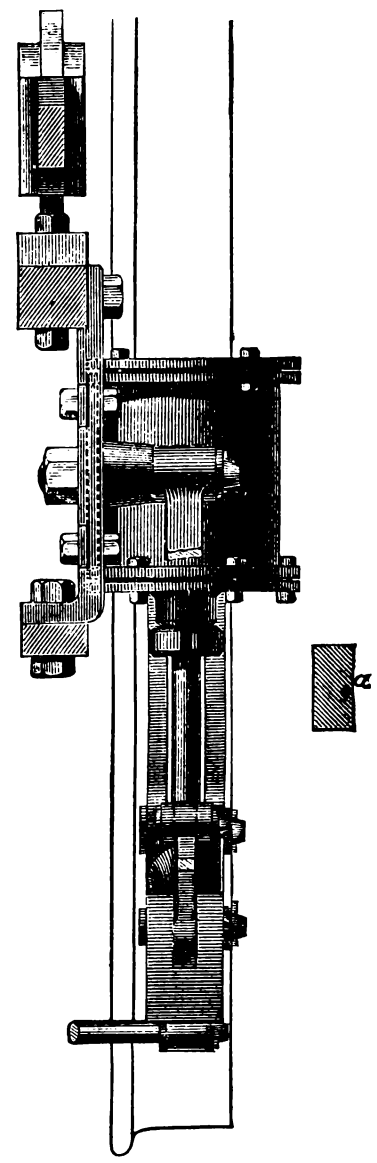

Fig. 3348.

This renders necessary a careful examination of the engine, which should be made both before and after each trip.

In the second place, we have that the amount of load the engine has to pull varies with every varying grade in the railroad track, and the variation is so great that on some descending grades the engine may require no steam whatever, while on ascending grades the utmost power attainable from the engine may be required. In firing, feeding the pumps, oiling the parts, and determining the depth of water in the boiler, the grade and the length of each grade has an important bearing, and so has the weather, since it is clear that between the heat of summer and the blizzards of winter there is a wide range of the conditions under which the engine runs.

In former times, from the less perfect construction of locomotives, the engineer's duties were greatly enhanced from breakdowns, which are comparatively rare with modern locomotives, and there is promise that from improved construction and safeguards they will become less frequent in the future.

It is as important for the locomotive engineer to be familiar with

Similarly, in filling the boiler, it may be necessary to open a gauge cock to let the air out.

The lower cock of the gauge glass should be opened to let the steam blow through if there is pressure on the boiler, or to let a little water out if there is not.

The safety valve should next be examined and moved to see that it works properly and does not stick to its seat.

Before laying the fire the fire bars and ash pan should be cleared of ashes and clinkers, and the grate bars tried with the shaking levers to see that the grates will shake properly. It should be seen that the tubes, etc., are clear of ashes.

In laying a new fire an ample supply of lighting material should be used, disposing it so that the fire will light evenly and not in spots, and a good layer of wood should be evenly distributed over the bars, the thinnest pieces being at the bottom as they will light easiest, and it is necessary to light the fire at the bottom, so that the heat from the wood that is first lighted shall pass through that to be lighted.

The wood should be kept burning without coal until the lower

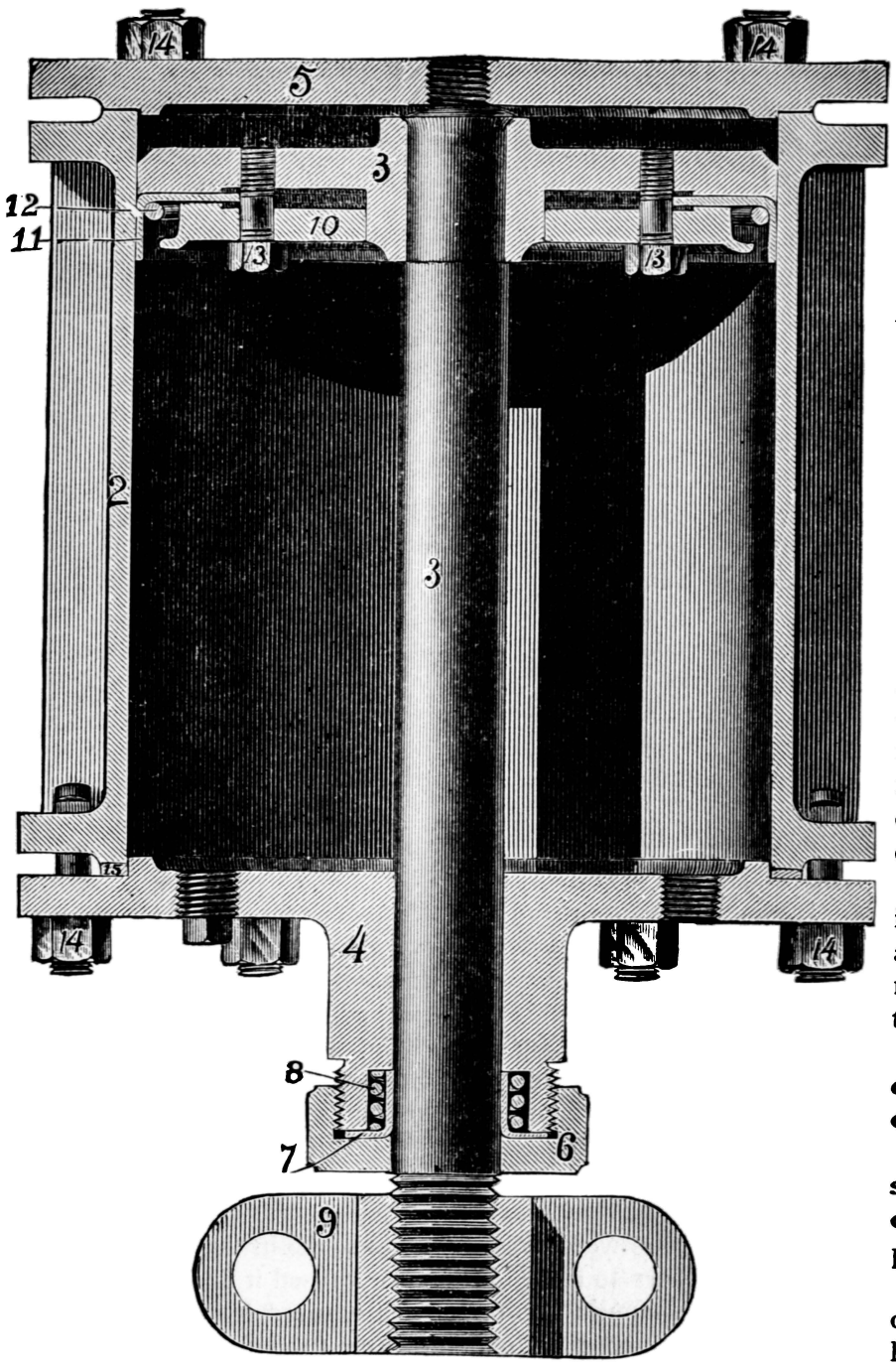

Fig. 3349.

stratum has ceased to blaze and covers the bars, while there is an even layer of blazing wood above it.

The quantity of coal to be fed at a time, and the depth of fire to be kept, depends upon the size of the coal, because the larger the coal the less it obstructs the draught, and the thicker the layer required in order to prevent currents of air from passing through without entering into combination with the gases from the coal.

If the coal is mixed, containing large lumps, they should be broken.

The first layer of coal should be enough to cover the fire to a depth of about two inches, which will permit of a good draught. This will get well alight while the wood is still serviceable, and a second layer may be applied of another two inches. The third feeding should be given with a view to have a greater depth of fire at the sides than at the middle of the fire box, because the cool sides of the box prevent perfect combustion, and currents of cold air are more apt to find their way through the sides than in the middle of the fire box.

Banking a fire consists of piling it up at the back half of the fire box and covering it up with green coal, so that it may keep alight and keep the boiler hot without increasing the steam pressure.

The air passing through the uncovered half of the fire bars prevents rapid combustion and a dead fire is maintained.

In starting up a banked fire, the first thing to do is to clean it of ashes, clinker, etc., shaking up the bars to see that they will work properly. The fire is then spread evenly over the bars, and wood fed to enliven the fire and promote the draught.

The blower or blast pipe is then set going, and coal gradually fed a little at a time, evenly distributed, covering those parts the most where the fire burns through the most brightly.

A steady fire is better than one that is forced, because the combustion is more perfect and less clinker is formed, hence less cleaning will be necessary, and the fire door will not be kept open so long to let in cold air. This is important because a steady temperature in the fire box promotes its durability, as well as giving a uniform boiler pressure. The strains placed upon a fire box by a fierce fire suddenly cooled by a heavy charge of coal or of cold air from an open fire door are highly destructive.

Furthermore, the greatest economy of fuel is attained by keeping the boiler pressure up, and using the steam expansively by hooking up the links to shorten the point of cut-off.

A safety valve steadily blowing off steam, whether the engine is running or not, is a sign of bad firing and wastefulness.

It is the fireman's duty to attend to the fire, but nevertheless a careful engineer will be as much interested in proper firing as in his own duties, and as the engineer has more experience than the fireman, he is warranted in exercising an ordinary supervision on the firing, which will be welcome to an earnest or ambitious fireman.

The engineer should examine, with a wrench in hand, the bolts and nuts about the trucks and axle boxes, as these are apt to become loose and come off on the road. A proper construction would remedy this defect almost entirely, and by a proper construction is meant the more frequent employment of split pins, colters, and other similar safety appliances now omitted for the sake of economy of manufacture.

Nothing in the future of the locomotive is more certain than improvement in this respect, and nothing is more urgently needed, as any engineer will become satisfied if he will gather up along a mile of ordinary railroad the nuts and washers that lay along the track.

The eccentric straps and the pins in the link motion require an examination, which may be done while oiling the parts of the engine.

The oiling requires careful attention ; first the cups themselves sometimes become loose, an argument in favor of having, wherever possible, the cups solid on the parts, as done in European practice.

Oil holes are apt to get choked by gumming, which is that the oil in time forms into a brown gummy substance that fills the oil hole. Perfect lubrication does not imply wasteful lubrication by any means, but a wasteful use of oil is probably less expensive than insufficient lubrication.

A thorough engineer will use no more oil than is necessary ; he will leave nothing to conjecture or chance, but know from personal inspection that his engine is in complete working order, and to this end the lubrication of the working parts is a vital element.

After having oiled the eccentric straps, the link motion and the reversing gear beneath the engine, the reversing lever and the parts above the frame must be oiled, and the reversing lever moved back and forth several times, from end to end of the sector or quadrant, so as to distribute the oil throughout the joints and working surfaces.

The axle boxes require careful attention in oiling. In English practice, tallow is packed in the corners of the cavities of the top of the box, so that if the box should begin to heat the tallow will melt, and afford extra lubrication with a heavier lubricant than usual, which will often stop the heating.

The connecting and coupling rods then require attention, the cups being filled and the lubrication adjusted.

When steam is up the gauge glass should be blown through again, and it will be found that the water stands higher in the glass than it did before the boiler was under pressure.

The packing of the piston and of the pump glands, if the engine has pumps, should be known to be properly set up, bearing in mind that a leaky pump gland lets air into the pump and impairs its action.

The sand box should contain dry sand, as wet sand will not feed properly.

If steam is raising too rapidly, close the lower damper to reduce the consumption of fuel and save blowing off steam through the safety valve, which should always be avoided as much as possible.

Before starting the engine, open the cylinder cocks and keep

them open until the sound discloses that dry steam, and not steam and water, is issuing.

Open the throttle enough to start the engine easily and not with a jump, and be prepared to shut off steam instantly if a blow in any part of the engine should indicate an obstruction to its working.

In starting a train, the reversing lever is put in the end forward notch and the cylinder cocks opened. Then the throttle is opened a little at first, so as to avoid starting with a violent shock that might break the couplings.

If in starting (or in ascending gradients) the wheels are forced to slip, the sand lever should be operated, a slight sprinkling of sand serving better than a heavy one. If the sand is damp, it will fall in lumps and not distribute evenly as it should do, while at the same time a great deal more sand will be found necessary.

When the train is fairly under way, the aim should be to maintain full boiler pressure, so as to keep up the required speed with the links hooked up to work the steam as expansively as possible, bearing in mind that the higher up the links are hooked the more expansively the steam is used, and that therefore less steam is used to do the work and the boiler pressure can be kept up easier.

To understand this clearly, let it be supposed that the steam pressure in the boiler is 90 lbs. per square inch, and that the piston area is 400 inches, and the total pressure impelling the piston will be 36,000 lbs.; if this follows the piston for 22 inches, the power becomes 792,000 inch lbs. per stroke.

Now suppose the pressure is 150 lbs. per square inch, and this multiplied by the piston area (400) gives 60,000 lbs. impelling the piston, and this would require to follow the piston but 13.2 inches in order to give 792,000 inch lbs. In the one case we have 22 inches, and in the other 13.2 inches of the cylinder to fill with steam. Of course it will take more fuel under the heat of firing to keep the pressure up to the 150 lbs.; but on the other hand, when the steam is cut off in the cylinder there will be 160 lbs. per square inch in it, and all the work that this does in expanding is gained during the rest of the stroke, so that the required amount of power would be obtained by cutting off earlier than at 13 inches.

The water should, under ordinary conditions, be kept at an uniform level in the boiler. Steam can of course be made quicker with a small than with a large quantity of water, but the smaller the quantity of water the more the steam pressure is liable to fluctuate, and the closer the firing must be attended to.

Furthermore, the more water there is in the boiler, the greater the safety, because the longer the boiler can go without feeding, and, if the pumps or injectors, as the case may be, should act imperfectly, there is more time to get them working properly.

In testing the water level, the gauge glass alone is not to be entirely depended upon, hence the gauge cocks should be opened. The water should not be allowed to go below the middle gauge cock.

It is obvious that when the water is below a certain gauge cock, the gauge glass only can give any information as to how far it is below it, hence it must be used for this purpose.

When using it, it should be blown through by opening its lower cock, and if there is any doubt about its showing the proper water level it should be blown through two or three times, watching the level of the water in the glass at each trial.

A constant boiler feeding is the best, as it is more conducive to a uniform boiler pressure and temperature.

The fire should be fed in small charges, the fire door being kept open as little as possible, because a high temperature in the firebox is necessary to perfect combustion. If heavy charges of coal are given at once, then for some time the fire box will be cooled, and then, as the fire burns through, a fierce heat will be generated. This alternate heating and cooling is very destructive to the fire box and the tubes, as it causes an expansion and contraction that rack the joints and seams.

There are several ways of firing, each having its advocate. Upon the following points, however, there is no dispute. First, a slow combustion is the most perfect, because it produces less clinker, which saves fuel and also saves a large amount of fire cleaning and therefore of admission of cold air to the fire box. A high temperature is necessary to combustion, and the temperature of the fuel is most difficult to keep up at the sides of the fire box.

By light and frequent firing the bright fire will never be covered up, hence the temperature will be maintained. This favors an even distribution over a large surface of the fire of each shovelful of coal. But if at any point the draught is lifting the fire, and small bright pieces of fire are lifting up, it is an evidence that the fire is thinnest there or else that the bars are cleanest there. In either case, an extra amount of coal is required at that spot.

Some engineers will charge one side of the fire box lightly and then the other, this being done so as to keep up the temperature in the fire box. Others will fire first the front and then the back of the box, which answers the same purpose, but in no case should the charge be heavy.

A fireman may become so accustomed to the road and his engine, that under some conditions he may fire when he reaches certain points on the road, regulating it like clockwork.

On a trip from Philadelphia to Reading, on an engine having a Wooten fire box (whose special feature is a large fire box, which enables slow combustion), the firing was conducted as follows:

The fire was was not fed or touched until just before reaching Bridgeport, 18 miles from Philadelphia, when a thin layer of coal was spread evenly on the fire. Eleven miles were then made without opening the fire door, the next firing taking place just before reaching Phœnixville.

Ten miles were run before the next firing, which occurred just before arriving at Pottstown.

The next firing occurred at Bordenboro', three miles from Pottstown. The remaining 8 miles were made without firing. The steam pressure did not vary more than 10 lbs. per square inch during the trip.

On a trip from New York to Philadelphia by the lightning express train the firing was conducted as follows:

The coal was anthracite and in lumps from 5 to 7 inches in diameter; at one end it reached up to the level of the fire door, while at the tube plate end of the fire box it was about 6 inches deep.

The grate bars were constructed to shake in three sections, and shaking the bars to clear out the fire caused it to feed forward of itself, and the combustion of the coal caused it to break up into lumps about 2 inches in diameter at the tube plate, where the fire was much brighter than at the fire door end. The steam pressure varied about 10 lbs. during the trip.

We now come to the best times to fire, to feed, and to oil the valves, and this depends on the level of the road.

On a level road these matters could be attended to with regularity, but as the engine has most work to do in ascending inclines, it is necessary to prepare for such emergencies:—First, by having a good fire prepared, so that the fire door may be kept closed as much as possible while the engine is ascending; second, by having plenty of water in the boiler, so as to keep steam, without feeding any more than possible when the engine is calling for more steam, by reason of the reversing lever being put over towards full gear.

The speed is kept well up before reaching the incline, and the reversing lever moved forward a notch or two at a time to maintain the speed, while at the same time moving the sand lever to feed the sand as soon as the engine speed shows signs of reducing.

ACCIDENTS ON THE ROAD.

The accidents to which the locomotive is most liable when running upon the road, and the course to be pursued by the engineer to enable him to take the engine to the depot or complete the trip, are as follows:

KNOCKING OUT THE FRONT CYLINDER HEAD OR COVER.—This arises from various causes, such as a breakage of a connecting rod strap, or of a piston rod or cross head. It is the practice of some locomotive builders to cut in the cylinder cover flange a small groove close to the part that fits the cylinder bore, so that the cover shall break out in the form of a disc, leaving the cover, flange, bolts, and nuts intact, and diminishing the liability to break the cylinder itself as well as the cover.

The provisional remedy for this accident is to take off the connecting rod (on the side of the broken cover) and also the valve motion, either at the rock shaft arm or by taking down the eccentric rod straps. Then place the valve in the centre of its travel so that it shall cover and enclose both the cylinder steam ports and leave the exhaust port open. Then block the cross head firmly on the forward centre, and go ahead with the other cylinder.

HEATING OF PISTON RODS.—This the engineer can often discover by sight, or by smelling it from the cab. The remedy is to stop the engine and slack back the gland until the steam from the engine cylinder leaks freely through the packing. Then apply a little extra lubrication or water while *running slowly*.

BREAKING OF A PISTON ROD.—If the piston rod breaks, but does not knock out the cylinder head or cover, pursue the same course as directed for breaking the cylinder cover, taking the additional precaution to block the piston, which may be done by fitting pieces of wood between the guide bars, making the pieces long enough to fit between the cross head and guide yoke.

The cylinder or waste water cocks on the side of the accident must also be opened, to prevent any leakage of steam past the slide valve from getting into the cylinder and driving the piston against the cylinder cover, and breaking the cylinder cover or even the cylinder itself.

If the piston rod breaks from the cross head, it is safest to remove it from the cylinder, though this is unnecessary, if it be securely blocked against the cylinder head so that it cannot move, though steam may leak in on either side of it.

BREAKING A CRANK PIN.—This is a somewhat frequent accident, but seldom takes place on both sides of the engine at once.

The remedy is to take off all the parallel or coupling rods, and if it is the crank pin on the driving wheels which breaks, take off the connecting rod also, and securely block the cross head, disconnecting the valve motion as before directed, and opening the cylinder waste water cocks. In the case of this accident occurring, it is absolutely essential to take off the parallel rods on both sides of the engine, or otherwise the crank pins on the other side are apt to break.

THROWING OFF A WHEEL TIRE.—In this case the best plan is to block the tireless wheel entirely clear of the track, which may be done by putting a block of wood into the oil cellar of the driving box, and then tow the engine to the repair shop; for if the engine is run to the shop, and the wheel touches the rail, it will impair its diameter for the proper size of tire.

THROWING OFF A DRIVING WHEEL.—This is not a common accident, but nevertheless it sometimes occurs; they break usually just outside of the driving axle box. In this case take out the driving box and fit in its place a block of wood affording journal bearing for the axle. Let this block rest on the pedestal cap, holding the axle up in the centre of the pedestal. Then secure the piston and disconnect the valve gearing and open the cylinder cocks as before, and the engine can be run *slowly* to the repair shop without danger of further accident, or, if convenient, it can be towed by another engine.

BREAKING A SPRING OR SPRING HANGER.—Lift the engine with the jacks until the driving wheel axle box is about in the centre of the pedestal, and put any convenient piece of iron across the top of the driving axle box and between it and the engine frame, thus taking the weight of the engine on the frame instead of on the spring. Place also a block of iron between the end of the equalizing bar and the top of the engine frame, so as to prevent the movement of the equalizing bar, and to allow the spring at the other end of the equalizing bar to operate without moving the said bar. Every engineer should carry in his tool box pieces of metal suitable for this purpose, because this is a frequent accident. It does not, however, materially affect the working of the engine, and should not delay a train more than a few minutes.

BURSTED FLUES AND TUBES.—These are usually plugged by tapering a piece of pine wood and driving it into the bursted tube by means of an iron bar. Taper iron plugs are often carried, and then driven into the end of the tube after the wooden one has been driven in. To enable this job to be done, it is necessary to thickly cover the fire with green coal, which operates to cool the tubes and prevent the loss of the water in the boiler. Sometimes careful engineers prepare for use pine plugs turned slightly taper, and a little slack, for the inside of the tube. In case of leak, this plug is inserted in the flue, and driven along it until it covers the fracture, the expansion due to its saturation causing it to become locked in the tube.

SLIPPING OF ECCENTRICS.—Place the reverse lever in the forward notch of the sector. Place the crank on its forward dead centre, as near as can be judged by the eye, and loosen the set screw of the forward eccentric, that is to say, the eccentric which connects to the upper end of the link. Move that eccentric round upon the axle until the slide valve leaves the steam port at the front end of the cylinder open to the amount of required valve lead. In moving the eccentric round upon the shaft, move it in the direction in which it will rotate when the engine is running forward, so as to allow for and take up any lost motion there may be in the eccentric straps, in the eccentric rod eyes and bolts, and in the other working parts of the valve gear; for if the eccentric was moved backward, all such lost motion would operate to vitiate the set of the valve. The eccentric being placed as directed fastens its set screw securely.

If the backward eccentric is the loose one, throw the reverse lever to the backward notch of the sector, lifting the link up so that the eccentric connected to the lower end of the link may be approximately adjusted by moving it around upon the axle in the direction in which it will rotate when the engine is rnnning backward, until the back cylinder port is open to the amount of the valve lead. Another very ready plan of temporarily adjusting the eccentrics is as follows: Place the reverse lever in the end notch forward, and place the engine crank or driving crank pin as near on a dead centre as the eye will direct, and open both the cylinder waste water cocks. Then disconnect the slide valve spindle from the rocker arm, and move the slide valve spindle until the opening of the cylinder steam port corresponding to the end of the cylinder at which the piston stands will be shown by steam blowing through the waste water cock at that end of the cylinder; the throttle valve being opened but a trifle, to allow a small steam supply to enter the steam chest and cylinder, for if much steam is admitted, it may pass through a leak in the piston and blow through both the waste water cylinder cocks.

The position of the valve being thus determined, the eccentric must be moved upon the driving axle until the valve spindle will connect with the rocker arm without being moved, or moving the valve at all.

HOT AXLE BOXES.—If not convenient to reduce the speed of the engine, or if that and free lubrication do not cool the box, a plentiful supply of cold water should be administered, it being well to have at hand a small hose pipe, by means of which water from the tender tank can be used. If the brasses have Babbitt metal in them and it should melt, it is better, if possible, to cool the axle box while the engine is moving, which will injure the journal less than if the journal is stopped to cool the box, because in the latter case the brass or box is apt to become soldered to the journal of the axle, and when the engine is again started, the cutting or abrasion will recommence with extreme violence.

BREAKING A LIFTING LINK OR THE SADDLE PIN THAT CONNECTS THE SLOT LINK TO THE REVERSE SHAFT.—Cut a piece of wood and tie it into the slot of the link, over the link block or die, making it of a length to keep the link in the position for hauling the train. Then fasten another piece of wood in the link slot beneath the sliding block or die, thus securing that die in the proper position for the engine to go ahead. In this case, the engineer must be careful in stopping, as he cannot reverse the engine on the crippled side.

Secondary accidents are almost sure to occur if a disconnected piston is not securely blocked in the cylinder, or from blocking the piston aright and attempting to let the slide valve run, or from attempting to run with the parallel rods on one side only disconnected. There are numerous accidents, which only common sense and a familiarity with the locomotive can provide a temporary remedy for, but those here enumerated are by far the most common.

ADJUSTING THE PARTS OF A LOCOMOTIVE.

When the wedges of the axle boxes are to be adjusted for fit to the pedestal shoes, the engine should be moved until the coupling rods on one side of the engine are in line with the piston rod, because in this position the rod will, to a certain extent, act as a guide in keeping the axles parallel to each other, and at a right angle to the line of engine centres.

Bear in mind that the distance from the centre to centre of axle boxes must be the same as the distance from centre to centre of the crank pins, and that when the coupling or side rods are in line with the piston rod, they act to resist the axle boxes from being set up too close together.

The importance of a proper adjustment of the axle boxes, coupling boxes, and connecting rods cannot be overestimated, and it is necessary therefore to explain it thoroughly. In Fig. 3350, then, *s*, *s* represent two wheel axles, whose boxes are between their wedges. At S, S' are the screws for setting up the shoes or wedges W and W' respectively. The axles are shown on the line of centres C, C of the engine, the piston being at the head end of the cylinder, and the crank pins on the line of centres as denoted by the small black circles. The wedges W and W' are shorter than the leg of the pedestal, so that they may be set up by the set screws S and S', and take up the wear.

In some engines the wedges V and V' are also shorter for the same purpose. Now it is clear that setting up the screws S and S' will move the axles *s*, *s'* to the left, and this will alter the clearance between the piston when it is at the end of the stroke and the cylinder cover.

It is clear that the distance between the centres of the two axles must be the same as the distance between the centres of the two crank pins, or else the frame will be subjected to a great strain, tending to break the crank pins and the side rods.

In order to keep the clearance equal and to know when it is equal, it is necessary, at some time when the cylinder cover at the head end is off, to disconnect the connecting rod and push the piston clear up against the left hand cylinder cover, and from the cross head as a guide, make on the side of the guide a line L'. Then put on the cylinder cover at the head end and push the piston up against it and mark a line L. Then when the connecting rod is put on again, the wheels may be moved around if the engine is jacked up, or, if not, the engine may be moved along the rails with a pinch bar, and the clearance will be equal when the cross head (at the ends of the stroke) comes within an equal distance of the respective lines L', L when the crank is on the dead centres, and it is well to adjust the wedges W W' so that the cross head does travel within an equal distance, and mark on the guide bar two more lines, one at each end of the bar.

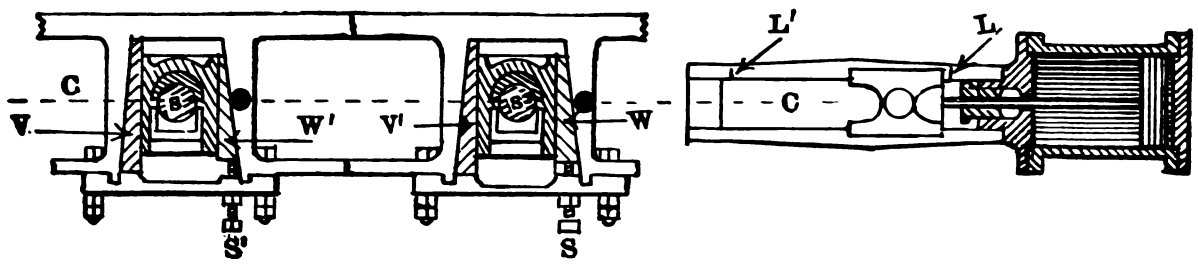

Fig. 3350.

These lines are a permanent guide in setting up the shoes or wedges, and lining up the connecting rods, and coupling or side rods, because it is clear that from the method employed in marking them the distance between the end of the cross head, when at the end of its stroke, and the line L, and that between the face of the piston and the cylinder cover, will be equal.

A proper adjustment, therefore, should be made as follows: The piston should be at the end of its stroke, the crank pins being on the line of centres.

Screw S should be operated to set up the wedge W, taking up the wear of the sides of the box, and bringing the edge of the cross head the proper distance from the line L. The connecting rod brasses should then be set up to fit the pins, and the screw S' operated to set up wedge W' to have easy contact with the side of its axle box. If, however, there has been so much wear on the axle boxes that they are still too loose between the wedges, both wedges may be set up to take up this wear, since it is more important to have the axle boxes a proper fit between the wedges than it is to maintain an exactly equal amount of clearance at each end of the cylinder.

The engine will then be in proper tram on this side, or, in other words, the distance from the centre to centre of the crank pins will be the same as that from centre to centre of the axles.

On the other side of the engine the process is the same, the engine being moved until the crank pins are on the line of centres C C and the wedges set up according to the lines.

CHAPTER XXXVII.—THE MECHANICAL POWERS. LEVERS, PULLEYS, GEAR WHEELS, ETC.

POWER is distinguishable from force or pressure in that the term power means force or pressure in motion, and since this motion cannot occur without the expenditure of the force or pressure, power may, with propriety, be termed the expenditure of force or pressure.

If we suppose a piston to stand in a vertical cylinder sustaining a weight upon its surface and compressing the air within the cylinder, so long as there is no motion no work is done, as the term "work" is understood in a mechanical sense, and the weight merely produces a pressure. If, however, the weight be removed, the compressed air will force the piston upward, performing a certain quantity of work which may best be measured by the amount of power exercised or expended.

The mechanical value of a given amount of power cannot be either increased, diminished or destroyed by means of any mechanical device or appliance whatsoever through which it may be transmitted.

It may be concentrated, as it were, by decreasing the amount of its motion. It may be distended, as it were, by increasing the distance through which it moves, or it may be expended in giving or producing motion, but in either case the amount of duty or work done is the exact equivalent of the amount of power applied.

A gain or increase in speed is not, therefore, a loss of power, but merely a variation in the mode of using or utilizing such power.

For instance, 1 lb. moving through a distance of 12 inches in a given time represents an amount of power which may be employed either as 1 lb. moving a foot, 2 lbs. moving six inches, or ½ lb. moving through 24 inches, in the same space of time, the amount of the power or duty remaining the same in each case, the method of utilization merely having differed.

It is an inexorable law of nature that power is concentrated in proportion as the amount of its motion is diminished, or distended in precise proportion as such motion is increased.

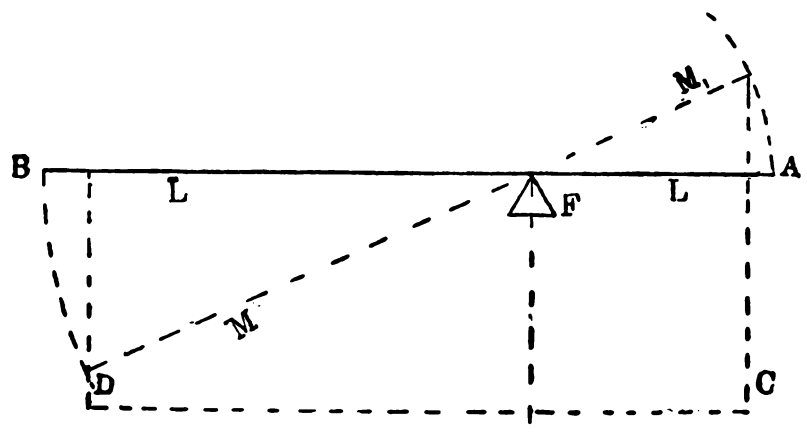

Fig. 3351.

Suppose, for example, that in Fig. 3351 L is a lever having its fulcrum at F, which is 4 inches from end A, and 8 inches from end B, and (leaving the weight of the lever out of the question) if we place an 8 lb. weight on A it will just balance 4 lbs. at B.

If the lever is moved, the amount of motion will be twice as much at end B as it is at end A.

If we apply the power at A, the lever has become a means of converting 8 lbs. moving a certain distance into 4 lbs. moving twice that distance, and nothing has been either gained or lost.

If we apply the power at B, the lever has merely been used as a means of converting 4 lbs. moving a certain distance into 8 lbs. moving one half that distance, and nothing has been gained or lost.

Suppose that end A was moved an inch, and the power at that end will be 8 inch pounds or 8 lbs. moving an inch, whereas at the end B the power is 4 lbs. moving 2 inches; we have, therefore, reduced the weight in the same proportion that we have increased the distance moved through.

Suppose now that the lever is moved to the position denoted by

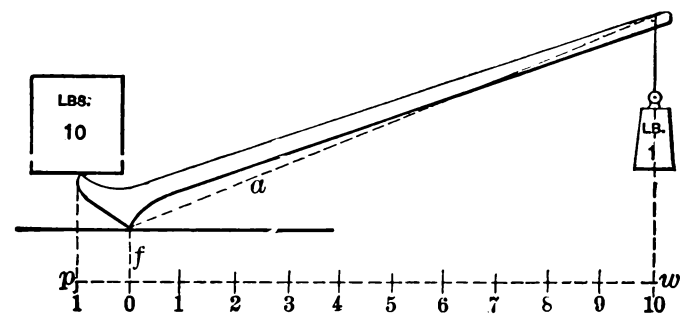

Fig. 3352.

the dotted line M M, and the leverages will be altered; that at end A becoming that denoted by the distance from F to the vertical C, and that for end B being denoted by the distance from F to the vertical D.

This occurs because we are dealing with gravity, which always acts in a vertical line.

A crow bar is an excellent example of the application of the lever. In Fig. 3352, for example, we have a 1 lb. weight on the long end of the lever, and as we are dealing with a weight, the effective length of the long end of the lever is from the fulcrum *f* to *w*, which is divided into 10 equal divisions. The short end of the lever is from *f* to *p*, which is equal to one division, hence the 1 lb. is balanced by the 10 lbs.

A simple method of distending power is by means of pulleys or gear wheels. Suppose, for example, that in Fig. 3353, we have a weight of 12 lbs. suspended from a shaft or drum, whose radius *a*

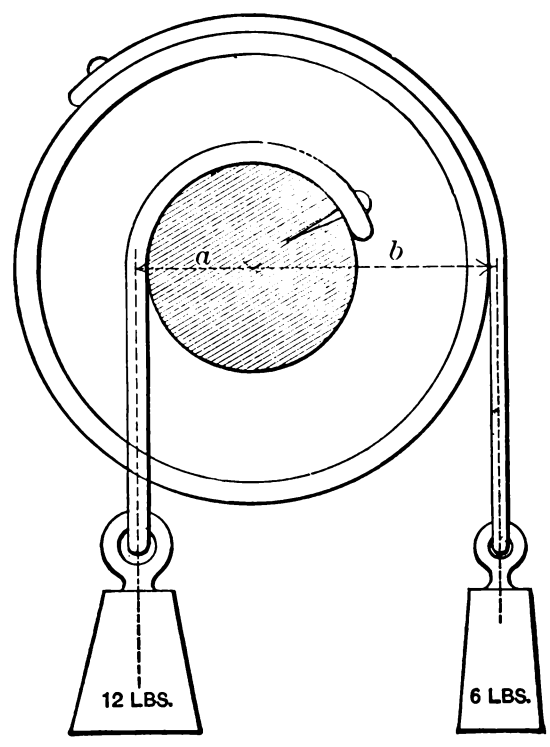

Fig. 3353.

is 10 inches, and that on the same shaft there is a pulley, whose radius *b* is 20 inches, and the two weights will balance each other.

In this case the falling of either weight would not effect the leverage, because the distance of both weights would remain the same from the centre of the shaft. The leverage of the 12 lbs. is denoted by the line *a*, and that of the 6 lbs. by *b*.

So far as the transmission of power is concerned, therefore, pulleys are in effect revolving levers, which may be employed to concentrate or to distend power, but do not vary its amount.

Suppose we have two shafts, on the first of which are two pulleys, B and C, Fig. 3354, while upon the second there are two pulleys D and E. A belt H, connecting C to D. Let the pulleys have the following dimensions:

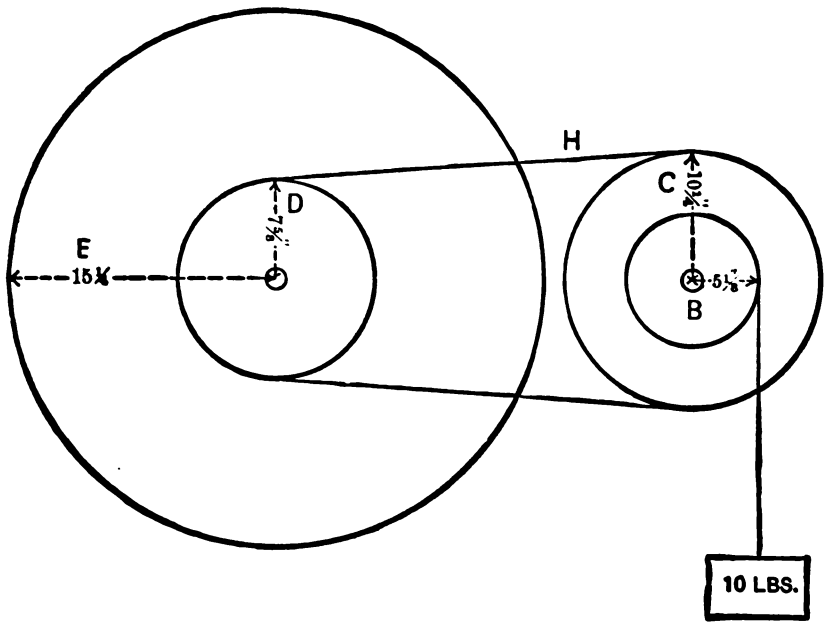

Fig. 3354.

If we take the first pair of wheels B and C, we have that the velocity will vary in the same ratio or degree as their diameters vary, notwithstanding that their revolutions are equal.

	Radius.	Diameter.	Circumference.
B =	5⅛ inches.	10¼ inches.	32.2 inches.
C =	10¼ "	20½ "	64.4 "
D =	7⅞ "	15¼ "	47.9 "
E =	15¼ "	30½ "	95.8 "

The velocity is the space moved through in a unit of time, and as it is the circumference of the pulley that is considered, the velocity of the circumference is that taken; thus, if we make a mark on the circumferences of the two pulleys, B and C, Fig. 3354, the velocity of that on C will be twice that upon B, or in the same proportion as the diameters.

Let there be suspended from the circumference of B 10 lbs. weight, and let us see the degree to which this power will be distended by this arrangement of pulleys, supposing the weight to rotate B, and making no allowance for the friction of the shaft.

Suppose the weight to have fallen 32.2 inches, and we have 10 lbs. moving through 32.2 inches, this power it will have transmitted to pulley B.

To find what this becomes at the perimeter of C, we must reduce the number of lbs. in the same proportion that the perimeter of C moves faster than does that of B; hence we divide the circumference of one into the other, and with the sum so obtained divide the amount of the weight; thus, 64.4 (circumference of C) ÷ 32.2 (circumference of B), = 2; and 10 lbs. ÷ 2 = 5 lbs., which, as the circumference of C is twice that of B, will move twice as fast as the 10 lbs. at B, hence for C we have 5 lbs. moving through 64.4 inches.

Now C communicates this to D by means of the belt H, hence we have at D the same 5 lbs. moving through 64.4 inches.

Now E moves twice as fast as D, because its circumference is twice as great, and both are fast upon the same shaft, hence the 5 lbs. at D becomes 2½ lbs. at E, but moves through a distance equal to twice 64.4, which is 128.8 inches. To recapitulate, then, we have as follows:

The weight	gives	10 lbs.	moving	through	32.2	inches.
Pulley B	"	10 "	"	"	32.2	"
" C	"	5 "	"	"	64.4	"
" D	"	5 "	"	"	64.4	"
" E	"	2½ "	"	"	128.8	"

That the amount of power is equal in each case, may be shown as follows:

For C, 5 lbs. moving through 64.4 inches is an equal amount of power to 10 lbs. moving through 32.2 inches, because if we suppose the first pair of pulleys to be revolving levers, whose fulcrum is the centre of the shaft, it will be plain that one end of the lever being twice as long as the other, its motion will be twice as great, and the 5 at 10¼ inches just balances 10, at 5⅛ inches from the fulcrum, as in the common lever.

In the case of D we have the same figures both for weight and motion as we have at C, because D simply receives the weight or force and the motion of C. In the case of E, we have the motion of the weight multiplied four times; for the distance E moves is 128.8 inches, which, divided by 4, gives 32.2 inches, which is the amount of motion of the weight, hence the 10 lbs. of the weight is decreased four times, thus 10 lbs. ÷ 4 = 2½ lbs., hence the 2½ lbs. moving through 128.8 inches is the same amount of power as 10 lbs. moving 32.2 inches, and we may concentrate or convert the one into the other, by dividing 128.8 by 4, and multiplying the 2½ lbs. by 4, giving 10 lbs. moving 32.2 inches.

If, therefore, we make no allowance for friction, nothing has been lost and nothing gained.

Thus far, we have taken no account of the time in which the work was done, more than as one wheel is caused to move by the other, and all of them by the motion of the weight, they must all have begun and also have to move at the same time. Suppose, then, that the time occupied by the weight in falling the 32.2 inches was one minute, and the amount of power obtained may be found by multiplying the lbs. of the weight by the distance it moved through in the minute, thus 10 lbs. moving 32.2 inches in a minute gives 32.2 inch lbs. per minute, being the amount of power developed by the 10 lb. weight in falling the 32.2 inches.

We may now convert the power at each pulley perimeter or circumference into inch pounds by multiplying the respective lbs. by the distance moved through in inches, as per the following table:

	Distance moved. Lbs.		Inches.		Inch lbs. of power.
Weight at B	10	×	32.2	=	322
" " C	5	×	64.4	=	322
" " D	5	×	64.4	=	322
" " E	2½	×	128.8	=	322

If we require to find the power in foot lbs. per minute, we divide by 12 (because there are 12 inches in a foot), thus 322 inch lbs. ÷ 12 = 26.83 foot lbs. per minute.

Now suppose that B was moved by a belt, with a pull of 10 lbs. at its perimeter, and made 100 revolutions in a minute instead of one, then the pull at the perimeters of C, D, and E would remain the same, but the motion would be 100 times as great, and the work done would therefore be increased one hundred fold. It will be apparent, then, that the time is as important an element as the weight.

The velocity and power of gear wheels are calculated at the pitch circle.

Now suppose the gear A in Fig. 3355 has 30, gear B 60, gear C 10 and gear E 80 teeth, and that 5 lbs. be applied at the pitch circle of A; to find what this 5 lbs. would become at the pitch circle of E, we multiply it by the number of teeth in B and divide it by the number of teeth in C, thus:

	Lbs.
At pitch of circle A	5
Number of teeth in B	60
Number of teeth in C 10)	300
	30

Answer, 30 lbs. at the pitch circle of E.

Now suppose that on the shaft of A there is a pulley 20 inches in diameter, and that on this pulley there is a belt exerting a pull of 5 lbs., while on the shaft of E there is a pulley 16 inches in diameter, and to find how much this latter pulley would pull its belt, we proceed as follows:

	2)20	= Diameter of pulley on A.
	10	= Radius of pulley on A.
	5	= Pull on pulley A.
Number of teeth in A	= 30)50	= Pull at centre of shaft of A.
	1.666	
	60	= Number of teeth on B.
Number of teeth on C	= 10)99.960	= Pull at axis of shaft of B.
	9.996	
	80	= Number of teeth on E.
Radius of pulley on shaft of E	8)799.680	Pull at axis of shaft E.
	99.96	Pull at perimeter of last pulley.

We have in this case treated each pulley as a lever whose length equalled the radius of the pulley, while in the case of the wheel we have multiplied by the number of teeth when the power was transmitted from the circumference to the shaft, and divided by the number of teeth (the number of teeth representing the circumference) when the power was transmitted from the shaft to the teeth.

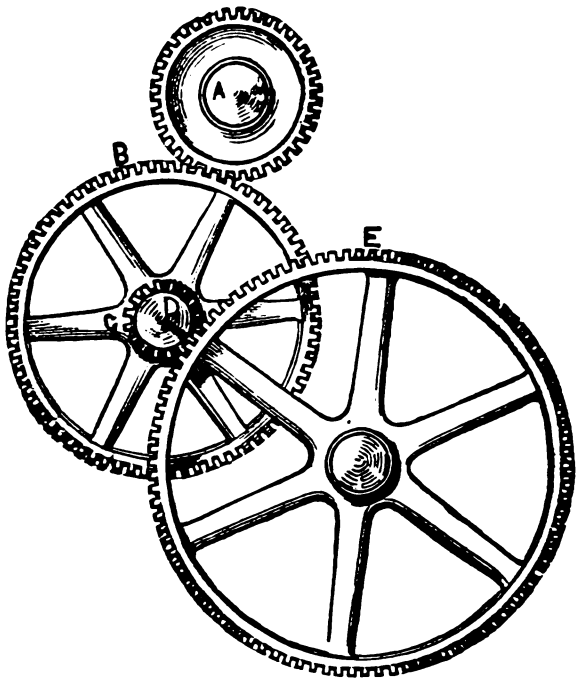

Fig. 3355.

We thus find that power is composed of three things, first, the amount of impelling force; second, the distance that force moves through; and third, the time it takes to move that distance.

If we take a number of pulleys, say four, and arrange them one after another so that they drive by the friction of their circumferences, then the amount of power transmitted by each will be equal and the velocities will be equal, whereas, if we arrange them as in Fig. 3354, the power will be equal for each, but the velocities or space moved through in a given time will vary.

What is known as the unit of power is the foot lb., being the amount of power exerted in raising or lifting one lb. one foot, and from what has already been said, it will be perceived that this is the same amount of power as 12 lbs. moving a distance of one inch.

Watt determined that the power of a horse was equal to that necessary to raise 33,000 lbs. one foot high in a minute, and this is accepted, in English speaking countries, as being a horse power.

An engine or machine has as much horse power as it has capacity to lift 33,000 lbs. a foot high in a minute.

CALCULATING THE HORSE POWER OF AN ENGINE.

The horse-power of an engine may be calculated as follows:

Rule.—Multiply the area of the piston by the average steam pressure upon the piston throughout the stroke, and by the length of the stroke in inches, which gives the number of inch pounds received by the piston from the steam during one stroke.

As there are two piston strokes to one revolution of the engine, we multiply by two, and thus get the number of inch pounds received by the piston in one revolution.

By multiplying this by the number of revolutions the engine makes in a minute, we get the number of inch pounds of power received by the piston in a minute.

By dividing this by 12, we get the number of foot pounds the piston receives per minute, and dividing this by 33,000 lbs. we get the horse-power of the engine.

It has already been stated that Watt determined that a horse was capable of exerting a power equal to the raising of 33,000 lbs. one foot high in a minute, hence, having foot pounds of the engine per minute, dividing them by 33,000 gives the horse power.

This gives the amount of power received by the piston, but it is evident that the engine cannot exert so much power, because part of it is expended in overcoming the friction of the moving parts of the engine.

The amount of the piston power expended in overcoming the friction depends upon the fit of the parts, upon the lubrication and the amount of the load.

Thus, the friction of the cross head guides, of the cross head pin, of the crank pin and of the crank shaft bearings will increase with the amount of resistance offered to the piston motion.

The average pressure on the piston is a difficult thing to find, however, for several reasons.

First, because the pressure in the cylinder may, during the live steam period, vary from that in the steam chest because of the ports being too small or from the passages being choked from a defective casting.

Second, because the steam is wire drawn during the time that the slide valve is closing the port to effect the cut off.

Third, because the live steam in the port and passage at the time the cut off occurs gives out some power during the period of expansion.

Fourth, because there is some condensation of the steam in the cylinder after the point of cut off, and there is no means of finding by calculation how much loss there may be from this cause.

During the live steam period there is also loss from condensation in the cylinder, but this is made up for by steam from the steam chest.

Fifth, the loss from condensation after the cut off has occurred will vary with the speed of the engine, and is greater in proportion as the piston speed is less, because there is more time for the condensation to occur in.

Sixth, there is some pressure on the piston between the time that the exhaust begins and the piston ends its stroke.

Seventh, because the compression absorbs some of the piston power.

Assuming the average pressure on the piston to be known, however, we may calculate the horse power as follows:

Example.—What is the horse power of an engine whose piston is 20 inches in diameter, and stroke 30, the revolutions per minute being 120, and the average pressure on the piston 60 lbs. per square inch?

		Diameter of piston 20
		Diameter of piston 20
		Diameter of piston squared 400
	.7854	
	400	
Area of piston =	314.1600	(these two ciphers neglected.)
	60	average steam pressure.
lbs. pressure on piston	18849.60	(this cipher neglected.)
	30	length of stroke in inches.
	565488.0	inch lbs. per stroke.
	2	two piston strokes per revolution.
	12)1130976	inch lbs. per revolution.
	94248	foot lbs. per revolution.
	120	revolutions per minute.
	1884960	
	94248	
	11309760	foot lbs. per minute.

```
33000)1130976(342.72 = horse power of engine
      99000
      140976
      132000
        89760
        66000
        237600
        231000
          66000
          66000
```

In working out the calculation, the ciphers that are decimals and are on the right hand are neglected or taken no account of, because they represent no value and may therefore be discarded.

Thus the area of the piston is 314.1600 inches, the two right hand ciphers having no value. Again the lbs. pressure on the piston is 18849.60 lbs., and the right hand cipher, having no value, is discarded The inch lbs. per stroke is 565488.0, and the decimal cipher, representing nothing, is discarded when multiplying by the 2.

We have in this case taken no account of the fact that the piston rod prevents the steam from acting against a part of the piston area during one stroke; hence for correct results we must subtract from the area of the piston one half the area of the piston rod.

The horse power thus obtained is that which the engine receives from the steam, and is more than the engine is capable of exerting to drive machinery, because a part of this power is consumed in overcoming the friction of the working parts of the engine.

TESTING THE HORSE POWER OF AN ENGINE.

The useful horse power of a stationary engine may be readily and accurately obtained by means of a pair of scales, and a brake, as shown in Fig. 3356, which is constructed and used as follows:

On the crank shaft of the engine is a pulley enveloped by a friction brake, which consists of an iron band, to which wooden blocks are fastened.

The ends of the iron band do not meet, but are secured together by a bolt as shown.

By screwing up the bolt the wood blocks are brought to press against the circumference of the wheel.

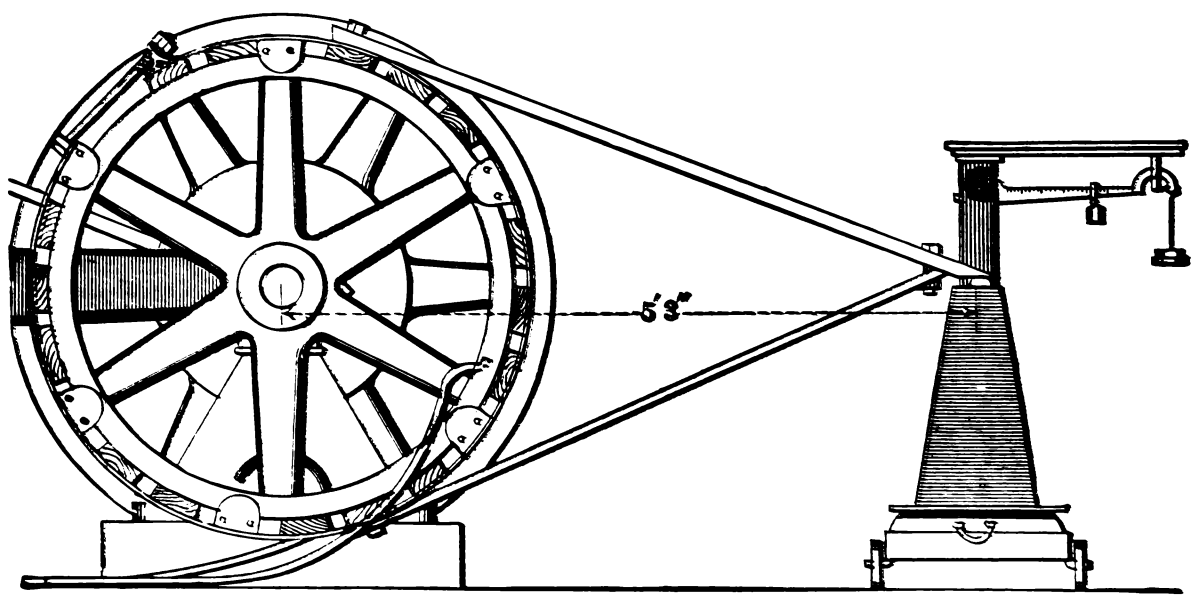

Fig. 3356.

This forms a friction brake that would revolve with the wheel, were it not for two arms that are secured to the brake, and rest at the other end upon a block placed upon a pair of scales.

The principle of action of this device is that the amount of friction between the brake and the wheel is weighed upon the scales, and this amount, multiplied by the velocity of the wheel at its circumference and divided by 33,000, is the horse-power of the engine.

It is necessary, in arranging this brake, to have its end rest upon the scale at the same height from the floor as the centre of the crank shaft, so that the line marked 5' 3" (5 feet 3 inches), which represents the length of the lever, shall stand parallel with the surface of the platform of the scale.

To test the horse-power, we proceed as follows:

Suppose the pressure of the end of the lever on the scale is found by the weight on the scale beam to be 540 lbs., the diameter on which the brake blocks act being 3 feet, the length of the leverage being 5 feet 3 inches, as marked, and the engine making 150 revolutions per minute, and the calculation is as follows:

```
                                540  lbs. on scale.
                                5.25 leverage in feet.
                               27 00
                              108 0
                             2700
radius of pulley in feet 1.5)2835.00(1890 lbs. at pulley perimeter.
                            15
                            133
                            120
                             135
                             135
                             ...0
```

Then

```
                            3.1416
                                 3  diameter of pulley in feet.
                            9.4248  circumference of pulley in feet.
                               150 revolutions per minute.
                            4712400
                            94248
                           1413.7200 velocity of pulley perimeter.
                               1890  pounds at pulley perimeter.
                           12723480
                          1130976
                          141372
                          2671930.80 foot lbs. per minute.
```

Then

```
33000)2671930.80(80.9
      264000
        319308
        297000
         223080
```

Answer, $80\frac{9}{10}$ horse power.

In this calculation we have nothing to do with the size of the cylinder or the steam pressure, because the scale beam tells us how many lbs. the brake exerts on the scale, and we treat the brake and brake pulley as levers. Thus by multiplying the lbs. on the scale by the leverage of the brake arm we get the number of lbs. exerted at the centre of the crank shaft, and by dividing this by the radius of the brake pulley we get the number of lbs. on the circumference, or, what is the same thing, the perimeter of the brake pulley.

By multiplying the circumference of the pulley in feet by the revolutions per minute, we get the speed at which the pounds travel, and by multiplying this speed by the number of lbs. we get

the foot lbs. per minute, which, divided by 33,000, gives us the effective horse power of the engine.

This effective horse power is correct, because in loading the engine by the brake the crank pin, the cross head guides, etc., are all placed under the same friction as they would be if it was a circular saw, or some other piece of machinery or machine that the engine was driving.

SAFETY VALVE CALCULATIONS.

Among the most frequent questions asked in an engineer's examination are those relating to the safety valves of boilers.

These questions may be easily answered from a study of the following:

The safety valve is a device for relieving the boiler of steam after it has reached a certain pressure.

This it accomplishes by letting the steam escape after it has reached the required pressure.

At what pressure the safety valve will blow off depends upon the position of the weight on the safety valve lever.

The calculations referring to this part of the subject are, finding how much weight will be required to be placed at a given point on the lever, in order, with a given sized valve, to blow off at a given pressure.

Finding the position on the lever of a given amount of weight, in order to blow off at a certain pressure.

Finding, with a given sized valve and a given weight, how to mark off the lever and where the notches must be cut for given pressures.

In each of these calculations there are three elements: first, the area of the valve and the steam pressure, which constitute the effect of acting to lift the valve; second, the amount of the weight and its position upon the lever, which acts to keep the valve closed; and third, the weight of the lever and of the valve, which act to keep the valve closed.

In Fig. 3357 we have a drawing of a safety valve shown in section, and if there was no weight upon the lever, the pressure of steam the valve would hold in the boiler would be that due to the weight of the valve and of the lever upon the valve.

To find out how much this would be, we would have to put the valve itself and the pin *a* on a pair of scales and weigh them.

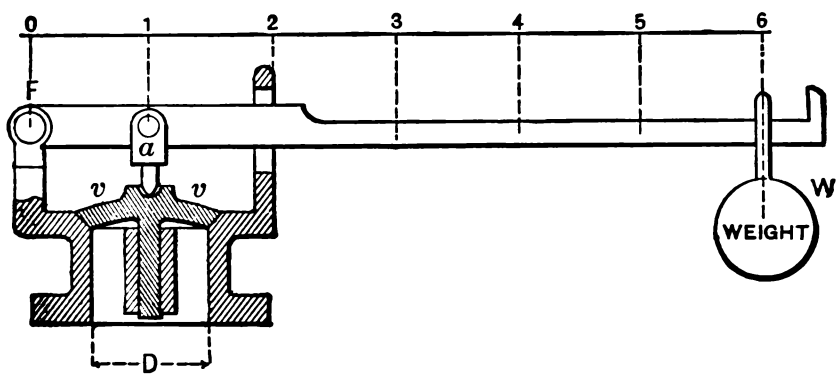

Fig. 3357.

Then put a piece of string through the hole at *a* in the lever, and see how much it weighed when suspended from that point.

Suppose the valve and pin to weigh 2 lbs. and the lever (suspended by the string) 10, and the total will be 12 lbs.

Next we find the area of the valve, and suppose this to be 8 square inches; then we may find how much pressure the valve would keep in the boiler, by dividing the area of the valve into the weight holding the valve down, thus:

```
                                  Lbs.
Weight of valve and pin,           2
   "     " lever,                 10
          Area of valve, 8 ) 12
Pressure the valve would hold,  1.5 lbs.
```

The area of the valve is that part of its face receiving the steam pressure when the valve is seated, so that if the smallest part of the valve diameter is equal to the diameter of the seat bore, the diameter from which the valve area is to be calculated will be that denoted by D in the figure, and cannot in any case be less than this. But if the smallest end of the valve cone is of larger diameter than the smallest end of the seat cone (which should not, but might be the case), then it is the smallest diameter of valve cone that must be taken in calculating the area, because that is the area the steam will press against.

Now suppose we rest a 20 lb. weight on the top of the valve that is on the point denoted by 1, and there will be 32 lbs. holding the valve down, thus, weight of valve 2 lbs., of lever 10, and weight added, 20 lbs., and to find how much pressure this would hold in the boiler, we divide it by the valve area, thus:

```
                    Weight on valve.
Valve area = 8 ) 32
                  4 = pressure valve will hold.
```

But suppose we put the weight on the lever, in the position shown in the figure, which is six times as far from the fulcrum F of the lever as the valve is, and its effect on the valve will be six times as great as it would if placed directly upon the valve, so that leaving the weight of the valve and of the lever out of the question (as is commonly done in engineers' examinations), we may find out what pressure the valve will hold, as follows:

Rule.—Divide the length of the lever by the distance from the centre of the valve to the centre of the fulcrum. Multiply by the amount of the weight in lbs., and divide by the area of the valve.

Example.—The area of the valve is 8 inches, the distance from the centre of the fulcrum to the centre of the valve is 4 inches, and the distance from the fulcrum to the point of suspension of the weight 24 inches, the weight is 40 lbs., what pressure will the valve hold?

```
                    Length of lever.
From fulcrum to valve, 4)24
                         6
                         40 amount of weight.
          Area of valve, 8)240
                           30
Lbs. per square inch the valve will hold = 30.
```

The philosophy of this is clear enough when we consider that as the weight is six times as far from the fulcrum as the valve is, and each 1 lb. of weight will press with a force of 6 lbs. on the valve, hence the 40 lbs. will press 240 lbs. on the valve, and as the valve has 8 square inches, the 240 becomes 30 lbs. for each inch of area.

Example.—The area of a safety valve is 8 inches, the distance from the fulcrum to the valve is 4 inches, and the weight is 40 lbs., how far must the weight be from the fulcrum to hold in the boiler a pressure of 30 lbs. per square inch?

```
                    In. lbs.
From fulcrum to valve, 4)40 amount of weight.
                         10

Area of valve,        8 square inches.
Pressure required,   30
                 10)240
                     24

                Answer = 24 inches from the fulcrum.
```

Example.—The diameter of a safety valve is 4 inches, the distance from the centre of the fulcrum to the valve is 3 inches, a 50 lb. weight is 30 inches from the fulcrum, what pressure will the valve hold?

```
      3 diameter of valve.
      3
      9
   .7854
     36
    45
   72
  63
 7.0686 = area of valve.
```

```
3)30
  10

  50 = weight
  10 = leverage of weight.
Area of valve, 7.068)500.000(70.7=lbs. pressure per sq. in.
                     49476
                      52400
                      49476
                       2924
```

HEAT.

The heat unit, or the unit whereby heat is measured, is the quantity of heat that is necessary to raise 1 lb. of water from its freezing temperature (which is 32° Fahrenheit) 1°, and this unit is sometimes termed a *thermal unit.*

The reason that some specific temperature, as 32° Fahrenheit, is taken, is because the quantity of heat required to heat a given quantity of water 1° increases with the temperature of the water; thus, it takes more heat to raise 1 lb. of water from 240° to 245° than it does to raise it from 235 to 240, although the temperature has been raised 5° in each case.

The whole quantity of heat in water or steam is not, however, sensible to the thermometer, or, in other words, is not shown by that instrument. The heat not so shown or indicated is termed *latent* heat.

Water obtains latent heat while passing from a solid to a liquid state, as from ice into water, and while passing from a liquid to a gaseous state, as while passing from water into steam, and the existence of latent heat in steam may be shown as follows:

If we take a body of water at a temperature above freezing, and insert therein a thermometer, the decrease in the temperature as the water becomes frozen will be shown by the thermometer. If, then, its temperature being say at zero, heat be continuously imparted to the ice, the thermometer will mark the rise in temperature until the ice begins to melt, when it will remain stationary at 32° so long as any ice remains unmelted, and it is obvious that all the heat that entered the water from the time the ice began to melt until it was all melted became latent, and neither sensible to the sense of feeling nor to the thermometer. Similarly, if the water, after the ice is all melted, be heated in the open air, the thermometer will mark the rise of temperature until the water boils, after which it will show no further rise of temperature, although the water still receives heat. The heat that enters the water from boiling until it is evaporated away is the latent heat of steam. The latent heat of water is 143° Fahrenheit, and that of steam when exposed to the pressure of the atmosphere, or under an atmospheric pressure of 15 lbs. (nearly), is 960°, which may be shown as follows:

If a given quantity of water, as say 1 lb., has imparted to it a continuously uniform degree of heat sufficient to cause it to boil in one hour, then it will take about 5⅓ more hours to evaporate it all away, hence we find the latent heat by taking the difference in the amount of heat received by the water, and that shown by the thermometer thus:

	Degrees.
Temperature by thermometer at boiling point...	212
Less the temperature of the water at first.....	32
Heat that entered the water in the first hour....	180
Hours that the water was subsequently heated..	5⅓
	900
One-third of 180..... =	60
Heat that entered the water during the 5⅓ hours	960 degrees.

This, however, is not quite correct, as it would take slightly more than 5⅓ hours to boil the water away, and the heat that entered the water after it commenced to boil would be about 966 degrees.

If the steam that arose from the water while it was boiling were preserved without increasing the pressure under which it boiled, and without losing any of its heat, it will have a temperature the same as that of the water from which it was boiled, which is a temperature of 212°, so that neither the steam nor the water account, by the thermometer, for the 966° of heat that entered the water after it boiled, hence the 966° became latent, constituting the latent heat of the steam when boiled from and at a temperature of 212°.

The total heat of steam is the sensible heat, or that shown by the thermometer, added to the latent heat; hence the heat necessary to evaporate water into steam at a temperature of 212° (which corresponds to a pressure of 14.7 lbs. per square inch) is 212° + 966°, which is 1178°, and these, therefore, are the number of degrees that must be imparted by the coal to the water, in order to form steam at a temperature of 212°.

WATER.

Water is at its greatest density when at a temperature of 39.1° Fahrenheit, that is to say, it occupies its least space and weighs the most per given quantity (as per cubic inch) when at that temperature.

At a lower temperature water expands, its freezing point being 32° Fahrenheit, below which it forms ice. The weight of a cubic foot of water when at its maximum density (39.1) is 62.382 lbs. Water also expands as its temperature is increased above 39.1°; thus, while it is heated from 39.1 to 212°, its volume increases from 1 to 1.04332. The expansion for each degree of heat added to its temperature increases from 0 at 40° Fahrenheit to .0043 at 212°.

The rate of expansion of water at a temperature above 212° is unknown.

STEAM.

At every temperature above freezing point water passes from the liquid into a gaseous state, the gas being termed steam. While water is below its boiling point its evaporation occurs at its surface only; but when its mass is heated to boiling point, and additional heat is imparted to it, evaporation occurs from the water lying against the surface from which it receives the heat, and an ebullition is caused by the vaporized water passing through the mass, the ebullition being what is known as boiling.

The temperature at which water boils depends upon the pressure acting upon its surface, the boiling point being at a lower temperature in proportion as the pressure is reduced; thus water at the top of a mountain, where the pressure of the atmosphere is less than at the sea level, would boil at a lower temperature than 212°, which is the boiling point when the atmospheric pressure is 14.7 lbs., which it is assumed to be at the sea level. Conversely, the boiling point is raised in proportion as the pressure upon its surface is raised, whether that pressure consists of air or of steam. As, however, the pressure is increased, the boiling point is at a higher temperature. So long as the steam is in contact with the water both are at the same temperature, as denoted by the thermometer (although they do not contain the same quantity of heat, as will be shown presently), and the steam is termed *saturated* steam.

The pressure of saturated steam cannot be either increased or diminished without either increasing or diminishing its temperature, hence there is a definite relation of pressure to temperature, which enables the pressure to be known from the temperature, or conversely, the temperature to be known from the pressure. But if the steam be separated from the water and heated, it may be what is termed *superheated*, which is that it may be surcharged with heat or contain more heat than saturated steam at the same pressure. Such additional heat, however, is latent.

The pressure of steam is the lbs. of force it exerts upon a given area, as upon a square inch. In non-condensing engines the effective pressure of the steam is its pressure above that of the atmosphere, because the exhaust side of the piston being exposed to the atmosphere receives the atmospheric pressure, which must be

overcome by a corresponding pressure of steam on the steam side of the piston, and this pressure is not, therefore, available for producing work or power in the engine.

In condensing engines, however, the exhaust side of the piston is (as nearly as practicable), relieved of the atmospheric pressure, and assuming a perfect vacuum to be formed, the whole of the steam pressure is exerted to propel the piston, in which case the steam pressure is termed the *absolute* pressure.

In considering the weight or density or the expansion of steam, its *absolute* and not its effective pressure must obviously be taken.

What is termed dry steam is *saturated* steam that does not contain what may be termed entrained water, which is water held in suspension in the steam, which may be caused by the surface of the water through which the steam is allowed to rise being too small in proportion to the volume of steam formed, in which case the rapid passage of the steam through the water causes it to carry up water with it and hold it in suspension, this action being termed *foaming* or *priming*.

Suppose, for example, that a boiler be filled with water up to the bottom of the steam dome, then all the steam formed would require to find exit from the water within the area of the dome, and the violence of the ebullition would cause foaming. Obviously, then, to obtain dry steam there must be provided a sufficient area of water surface for the steam to pass through.

But water so entrained is evaporated into steam, if the steam is wire drawn, that is, allowed to expand and reduce in pressure.

THE EXPANSION OF STEAM.

A cubic inch of water, when evaporated into steam at a pressure of 14.7 lbs. per square inch, occupies as steam a space or volume of 1644 cubic inches, and its weight will be equal to that of the water from which it was evaporated.

If additional heat be imparted (after its evaporation into steam), such additional heat becomes latent and does not cause an increase of sensible temperature or of pressure.

The weight of a given volume of steam, therefore, bears a definite and constant relation to the pressure and sensible temperature of the steam, so that the pressure or the sensible temperature being known, the weight of a given volume, as say a cubic foot, may be known therefrom. Or the weight of a cubic foot of steam being known, its sensible temperature and pressure may be known therefrom.

This would not be the case if steam expanded by heat. Suppose, for example, we have a cubic foot of steam at any absolute pressure, as say 15 pounds per square inch, a cubic foot weighing .0387 of a lb., and its sensible temperature will be 213°. Now it is evident that the weight will remain the same whatever the amount of heat that may be imparted to the steam. Now if the steam were maintained within the cubic foot of space, and was capable of expansion by the absorption of additional heat, its pressure would increase and its weight remaining the same, there would be no definite relation between the weight and the temperature and pressure.

But if the cubic foot of steam were allowed to expand so as to occupy more space, then additional heat is necessary to prevent its condensation.

The relation between the temperature, pressure, and weight of steam is not quite proportional to the volume, because steam is not a perfect gas, and does not, therefore, strictly follow Marriotte's law.

A perfect gas is one that during expansion or compression follows the law laid down by Boyle and Marriotte, this law being that, if maintained at a constant temperature, the volume is inversely proportional to the pressure.

For example, the quantity of gas that, if confined in a cubic inch of space, would give a pressure of 80 lbs. per square inch, would give a pressure twice as great (or 160 lbs. per inch of area), if confined in one-half the space, that is, if compressed into one-half of a cubic inch. Conversely, if the cubic inch was allowed to expand until its pressure was 40 lbs, it would occupy 2 cubic inches of space, assuming, of course, that the temperature remains the same. Since, however, if a gas be compressed, its temperature is increased by reason of the friction of the particles moving one upon the other, the law of Marriotte may be better explained as follows:

Suppose we have three vessels, A, B, and C, filled with a fluid which is a perfect gas, the temperatures being equal. Let the pressure be: A 40, B 80, and C 160 lbs. per square inch, then 2 cubic inches of the fluid in B will weigh the same as 4 cubic inches in A, because that in B is at twice the pressure of that in A, and the 2 cubic inches in B will weigh the same as 1 cubic inch in C, because its pressure is one-half that of C, or, what is the same thing, whatever number of cubic inches of the fluid in C it takes to weigh a pound, it will take twice as many in B, and four times as many in A to weigh one pound.

But steam is not a perfect gas, as is evidenced by the fact that its volume does not increase in a ratio inverse to its pressure. For example, if a cubic inch of water be evaporated into steam at a pressure of 14.7 lbs. per square inch, its volume will be 1644 cubic inches, and its temperature 212° Fahrenheit.

But if the cubic inch of water be evaporated into steam at twice the pressure, which is 29.4 lbs per square inch, its volume will be 838 inches.

The volume then is not inversely as the pressure, although the actual quantity and weight remain the same, as is proven by the fact that if the steam at either pressure were condensed it would pass back into the cubic inch of water from which it was generated.

This may be accounted for in the difference in the boiling point of the water in the two pressures, or in other words, by the difference in the temperatures; thus the boiling point of the water at a pressure of 14.7 lbs. is 212°, while that for the pressure of 29.4 is increased about 38.4 degrees, and the steam is at the higher pressure expanded by these 38.4 degrees of heat, which adds to its pressure, although not affecting its actual quantity or weight.

The amount of this expansion may be estimated as follows:

Taking the 1644 cubic inches, and supposing the steam to be a perfect gas, we divide it by 2 to obtain half the volume, $1644 \div 2 = 822$.

If then we subtract this 822, which is the volume of the steam if it acted as a perfect gas from the 838 it actually occupies, we get 16 ($838 - 822 = 16$), which is the number of cubic inches of expansion due to the increase in the boiling temperature.

THE CONVERSION OF HEAT INTO WORK.

When steam performs work a certain portion of the heat it contains is converted into work, the steam simply being a medium of conveying the heat into the cylinder in which the motion of the piston converts this proportion of heat into work. It has been proven that a given quantity of heat will pass into a given quantity of work, and conversely that a given quantity of work is convertible into a given quantity of heat, and it has also been proven that so much heat is convertible into so much work, independent of the temperature of the heat during its conversion into work, power, or energy, all three of these words being used to imply pressure, force, or weight in motion.

The accepted measurement of the conversion of heat into work is known as *Joule's equivalent; Joule* having determined that the amount of power exerted in raising 772 lbs. one foot is the equivalent of the amount of heat that is required to raise the temperature of 1 lb. of water when at or near its freezing point (that is, at a temperature of 32°) one degree.

This is called the *mechanical equivalent of heat*, being merely the quantity of heat necessary to do a certain amount of work, but having no relation to the time in which that work was done.

The conversion of heat into work and of work into heat may be demonstrated as follows: Suppose a cylinder to be so situated that heat can neither be transferred to it or from it, and that saturated steam be admitted under the piston so as to fill one-half of the cylinder at a pressure of 50 lbs.

Suppose then that we raise the piston from an independent application of power, the steam simply expanding to fill the space given by the piston, but not exerting its force to move the piston.

Now suppose the experiment is repeated, permitting the force of the steam to lift the piston, and the temperature of the steam will be less in the second than it was in the first, proving that in the second experiment a certain portion of the heat in the steam was converted into the work of raising the piston.

If we desire to reconvert the work into heat, we may force the piston back again to its original position, and its temperature will be restored to what it was before we allowed it to raise the piston. It is here, of course, assumed that there is no friction in moving the piston in the cylinder.

The apparent or external work performed by steam in expanding and moving a piston against a given resistance is measurable by multiplying the amount of the resistance against which the piston moved by the distance it moved through, thus:

Suppose a piston weighs 100 lbs. and had resting upon it a weight of 50 lbs., and that it be raised by the expansive action of steam a distance of a foot, then, since the total resistance it moved against would be (supposing it to move frictionless in the cylinder) 150 lbs., and since the amount of motion was 1 foot, the external or apparent amount of work performed by the steam will be 150 foot lbs., or 150 lbs. moved 1 foot.

But in expanding, the steam has performed a certain amount of what is called *internal* work, that is to say, its particles or atoms have done work in expanding, and this work has been done at the expense of some of the heat in the steam, so that the loss of heat due to the motion of the piston is the amount of heat converted into work in moving the piston against the piston resistance, added to that converted into the internal work due to the expansion of the steam.

It is because of this internal work that the steam in expanding does not strictly follow Marriotte's law.

The mechanical theory of heat is, that the atoms of which bodies are composed are at absolute rest when at a temperature of 461.2° below the zero of Fahrenheit, which is supposed to be absolute cold, and at any degree of temperature above this the atoms are in motion; the extent and force of their motion determines what we know as the temperature of the body.

Atoms are capable of transmitting their motion to adjoining atoms of the same or of other bodies, losing, of course, the amount of motion they transmit, and it is in this way that heat is conveyed from one to another part of the same body, or from one body to another, this being known as the heat of *conduction*.

But heat may be conveyed by means of what is known as *radiation*, and also by *convection*.

Thus, the air surrounding a heated body becomes heated, and by reason of its expansion it then becomes lighter and rises, a fresh supply of cooler air taking its place, becoming in turn heated, and again giving place to cooler air; the heat thus conveyed away by the fluid or air is conveyed by what is termed *convection*.

Heat also passes from a body in straight lines or rays, which do not heat the air through which they pass to their own temperature, but do impart that temperature to a solid body, as iron or water; the heat that passes from a body in this manner is termed radiant heat, or the heat of *radiation*.

In the cylinder of a steam engine, therefore, the heat contained in the steam is disposed of as follows:

A certain portion of it is converted into work through the medium of the piston.

Another portion is conveyed away by the walls of the cylinder, this portion including the heat of convection and that of radiation.

Yet another portion is converted into internal work. Referring to the latter, suppose that steam is permitted to expand and its atoms will be in motion, which motion has been derived at the expense of or from the conversion of a certain quantity of heat.

The amount of the heat so converted obviously depends upon the amount of the motion. Suppose, for example, that steam is generated in a closed vessel as in a steam boiler, and that a certain pressure having been attained, the steam is permitted to pass off as fast as it is formed from the boiler, then the amount of atomic motion will remain constant, because the pressure remains constant; but suppose instead of the steam passing off, it be confined within the boiler, then the pressure will increase and there will be a greater resistance to the motion of the atoms, hence their motion will be less, and less of their heat will therefore be converted into atomic motion, and, as a consequence, more of it will exist in the form of sensible heat; hence while the pressure of steam continues to increase, its heat is increased, not only by reason of the heat it receives from the furnace, but also by reason of that abandoned by the steam, because it is prevented by the pressure, from expending it in atomic motion.

CHAPTER XXXVIII.—THE INDICATOR.

THE indicator is an instrument which marks or draws a figure, or diagram as it is called, which shows the pressure there is in the cylinder at every point in the piston stroke, while it also shows the resistance offered by the same body of steam to the piston on its return stroke. From the form of this figure or diagram, the engineer is enabled to discover whether those parts of the engine whose operation regulates the admission of the steam to and its exhaust from the cylinder are correctly adjusted.

From the diagram the engineer may find the average or mean effective pressure of steam on the piston throughout the stroke, for use in calculating the power of the engine.

He may also locate the point of cut off, of release, the amount of back pressure, the degree of perfection of the vacuum in a condensing engine, and the amount of compression.

From the area of the diagram the engineer may also estimate the quantity of steam that is used, and supposing it to be dry

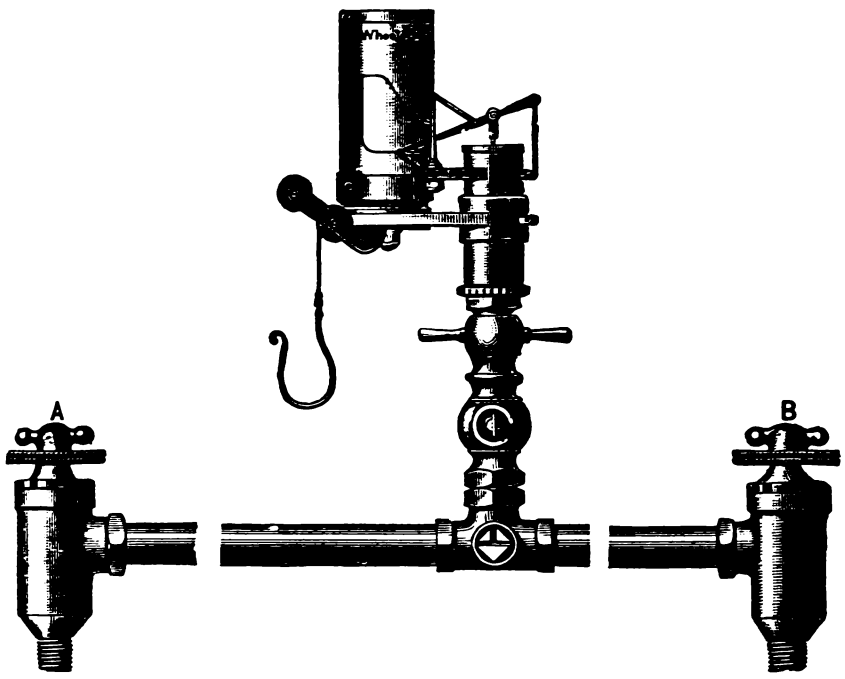

Fig. 3358.

steam, he may calculate the amount of water used to make the steam, and assuming one pound of coal to evaporate so much water, he may calculate the amount of coal used to produce the steam.

The indicators commonly used upon steam cylinders contain two principal mechanical movements ; first, a drum revolving the piece of paper upon which the diagram is to be marked, and second, a piston and parallel motion for moving the pencil to mark the diagram upon the revolving paper.

The drum is given a motion that, to insure a correct diagram, is exactly timed with the piston motion.

The pencil is given a vertical movement ; this movement must bear a constant and uniform relation to the pressure of the steam in the engine cylinder.

An indicator may be attached to each end of the cylinder or in the middle, with a pipe passing to each end of the cylinder, as in Fig. 3358, but an indicator of the usual construction and such as here referred to, can take a diagram, or *card* as it is sometimes called, from but one end of the cylinder at a time. The stop valves A and B are used, so that the communication between the indicator and one end of the cylinder may be shut off while a diagram is being taken from the other end, while both ends may be shut off when the indicator is not being used.

In the figure a piece of paper (or card, as it is commonly called) is shown in place upon the drum with a diagram upon it.

The Thompson Indicator is shown in Fig. 3359, and in section in Fig. 3360.

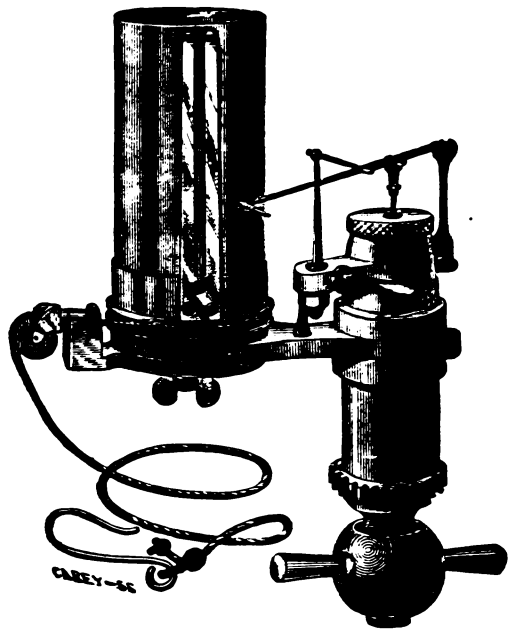

Fig. 3359.

The Tabor Indicator is shown in Fig. 3361, and in section in Fig. 3362.

Both are made with the piston and parallel motion as light as possible, in order to enable the taking of diagrams at as high a speed of engine revolution as possible.

Each consists of a cylinder and piston, the bottom surface of the latter being in communication with the bore of the engine cylin-

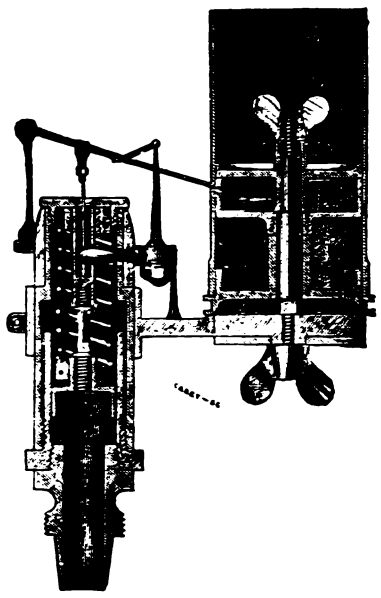

Fig. 3360.

der, so as to receive whatever steam pressure there may be in the cylinder.

This indicator piston receives, on its upper surface, the pressure of a spiral spring, which acts to resist the steam pressure.

The indicator piston rod actuates an arm or line on the end of which is a pencil, which, by means of a parallel motion, is caused to move in a straight line.

The paper or *card* being in place upon the drum, and steam let

into the indicator, the pencil lever is moved until the pencil touches the paper as lightly as possible, and as a result of the combined movements of the pencil and drum, the diagram is marked, its

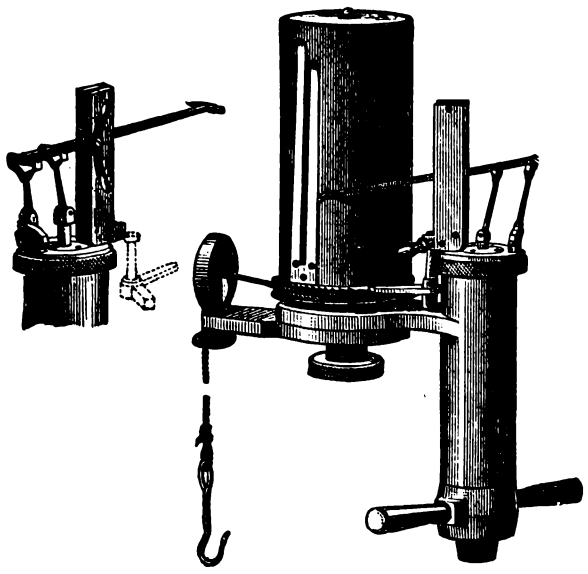

Fig. 3361.

form being illustrated in Fig. 3363, which represents a diagram placed above a cylinder, and the engine piston in three positions; first at the beginning of the stroke; second, at the point of cut off (which is supposed to be at one-third of the stroke); and third, at the point of release where the valve first opens the port for the exhaust. For convenience, the diagram is shown as long as the cylinder, but the actual diagram usually measures about 2½ inches high and 4¼ inches long.

Supposing the cylinder to be filled with air, and the engine piston in position 1, and the indicator piston would be at the corner A of the diagram; but if steam were admitted, the pencil would rise vertically, marking the line from A to B, which is therefore called the *admission line*, or by some, the *induction line*.

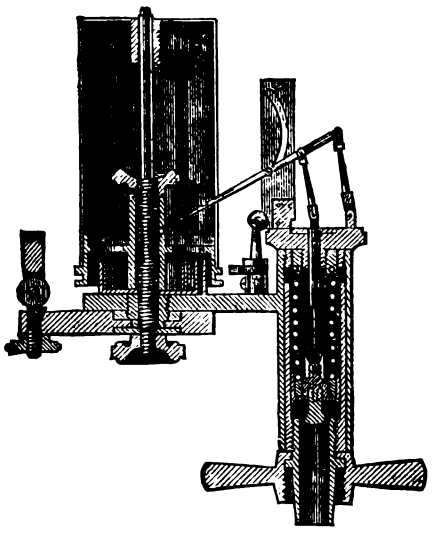

Fig. 3362.

If on reaching B the pressure was enough to move the engine piston, that piston and the indicator drum would move simultaneously, and as long as live steam was admitted the line from B to C would be drawn, hence this is called the *steam line*, its length denoting the live steam period.

The cut off occurs when the engine piston is in position 2, and the indicator pencil at C.

From this point the pencil will fall, in proportion as the steam pressure falls from expansion until the exhaust begins, the piston then being in position 3, and the pencil at D.

The line from C to D is therefore called the *expansion line* or *expansion curve*, and the point D the *point of release* or *point of exhaust.*

We have now to explain that in reality the whole of the remainder of the line of the diagram is, in reality, the exhaust line, yet there is a difference between the part of the line from point D to the end E of the diagram, and that part from E to A, inasmuch as that during the period of exhaust from D to E, the pressure is helping to propel the piston, while after E is reached, whatever steam pressure there may remain in the cylinder acts to retard the piston.

The line from D to E is therefore the exhaust line, and that from E to A is the *back pressure line* or *counter pressure line.*

In this example it has been supposed that while the piston was moving from position 3 to the end of its stroke, and the pencil from D to E, the indicator piston would have a steam pressure on it equal to atmospheric pressure, hence the line from E to A, in this case, represents the atmospheric line, and also the back pressure line.

The atmospheric line is a line drawn when there is no steam admitted to the indicator, and represents a pressure above a perfect vacuum equal to the pressure of the atmosphere. Its use is

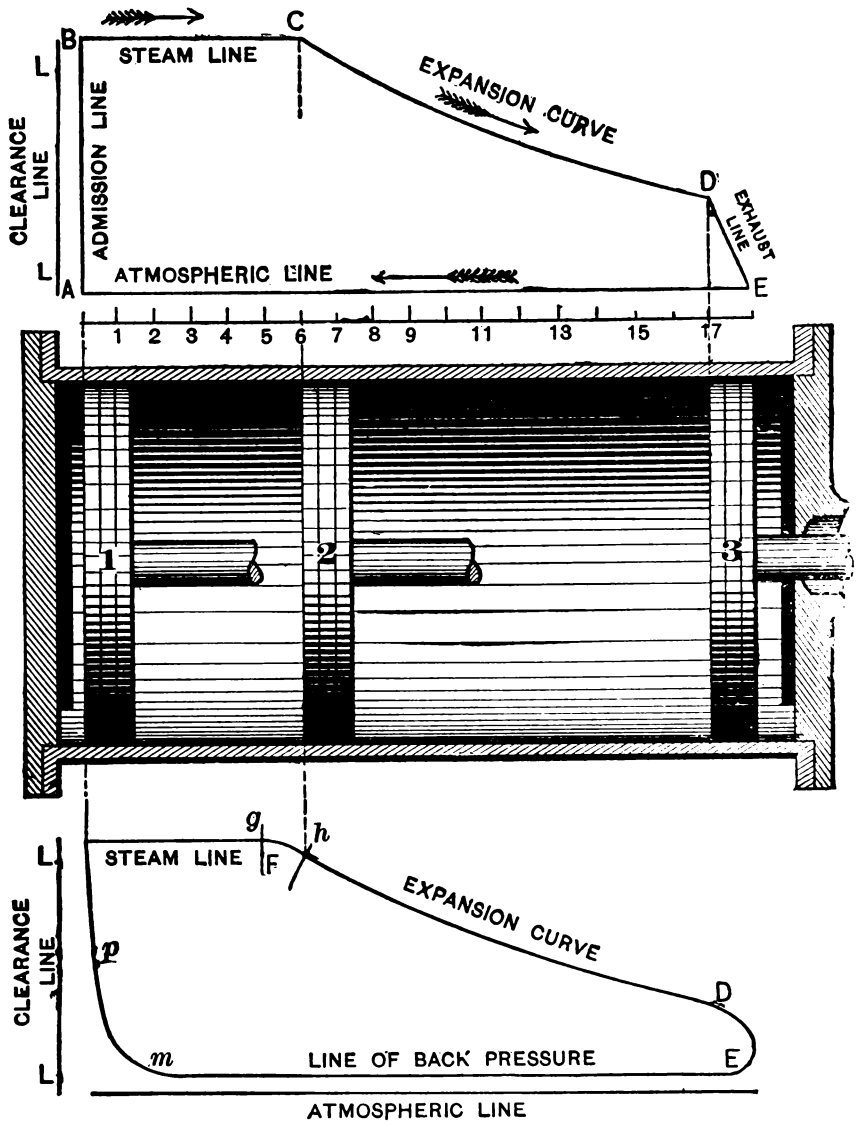

Fig. 3363.

to show the amount of back pressure, and in a condensing engine to show the degree of vacuum obtained.

It also forms a line wherefrom the line of perfect vacuum, or that of full boiler pressure, may be marked.

The steam pressure at any point in the stroke is denoted by the height of the diagram above the atmospheric line, but the steam pressure thus taken is obviously above atmospheric, and is thus the same as the pressure of a steam gauge, which is also above the atmospheric pressure, and therefore represents the pressure that produces useful effect in a non-condensing engine.

This is what may be called a theoretical diagram, because, first, it supposes the steam not to be admitted to the cylinder until the piston was at the end of its stroke, and to attain its full pressure in the cylinder before the piston lead begins to move, whereas, in order to attain a full steam pressure at the beginning of the stroke, the valve must have lead.

Second, it supposes the cut off to be effected simultaneously, whereas the valve must have time to move and close the port, and during this time the steam pressure will fall, and the curve C of the diagram will therefore be rounded more or less according to the rapidity with which the valve closed.

Third, it supposes the steam to have exhausted down to atmospheric pressure by the time the piston had reached the end of the stroke, whereas the piston will have moved some part of the

back or return stroke before the steam will have had time to exhaust down to atmospheric pressure; and,

Fourth, it supposes the steam to remain at atmospheric pressure until the piston arrives at the end of its return stroke, whereas the valve will begin to close the port and cause the steam remaining in the cylinder to compress before the piston has completed its return stroke.

In practice the diagram will, under favorable conditions, accord nearer to the shape shown in the lower part of Fig. 3363, in which the closure of the port for the cut off is shown by the curve at F. At the point denoted by *g* the valve began to close, and at the point denoted by *h* the cut off was completely effected, and the expansion curve began.

The curve beginning at D is caused by the gradual opening of the exhaust port.

The height of the line of back pressure above the atmospheric line shows the amount of back pressure.

At the point *m*, where the back pressure line rises into a curve, the valve had closed, shutting in the cylinder a portion of the exhaust steam, which is afterwards compressed by the piston.

This curve is therefore called the *compression line* or *compression curve*. The point at which it begins cannot be clearly seen when the exhaust port is closed slowly.

The compression curve ends at *p*, where it merges into the admission line, but the exact point where the compression ends and the admission begins cannot always be located, this being the case when the port is opened slowly or the compression extends through a large portion of the stroke.

The admission line is, however, in most cases nearly vertical when the valve has lead, because the valve opens the port quickly while the engine piston is moving at its slowest.

A diagram as drawn by the indicator does not account for all the steam that is used in the cylinder, however, as will be seen from Fig. 3363, because, as the paper drum of the indicator receives its motion from the engine cross head, its length represents the length of the piston stroke, whereas, there is a part of the cylinder bore between the piston (when it is at the end of the stroke) and the cylinder cover that is filled with steam as is also the steam passage.

This steam performs no useful work during the live steam period, but obviously expands during the expansion period, and therefore affects the expansion curve, and must be taken account of in calculating the consumption of steam, of water, or of coal from the diagram, or in marking in the true expansion curve.

In calculating the horse power, however, it may be neglected, as it does not enter into that subject.

But in any calculation involving the amount of steam used, the clearance must be marked in by a line at a right angle to the admission line and distant from the nearest point of the admission line to an amount that bears the same proportion to the whole length of the diagram as the clearance does to the whole contents of the cylinder.

The clearance line is shown at L, L', in Fig. 3363, its distance from the admission line representing the amount of clearance which includes the contents of the steam port and passage, as well as that of the cylinder bore that is between the cylinder cover and the piston, when the latter is at the end of the stroke.

A method of measuring the amount of clearance has already been given with reference to stationary steam engines.

A diagram for a condensing engine is shown in Fig. 3364, which corresponds to Fig. 3363, except that the line of perfect vacuum or no pressure is marked in.

It represents a perfect vacuum, and must be marked on all diagrams from which the consumption of steam is to be calculated, because the quantity of steam used obviously includes that which is used in counter balancing the pressure of the atmosphere.

Learners often get confused on this point, hence it may be more fully explained as follows:

Suppose the engine piston to be blocked in the middle of the cylinder, and has on one side of it a pressure of 20 lbs. of steam by steam gauge, and on the other the pressure of the atmosphere, and we might pump out the steam, thus leaving the cylinder empty on that side of the piston.

The atmosphere would then exert a pressure of about 14½ lbs. per square inch on one side of the piston, and if we slowly admitted steam again, it would have to get up a pressure of 14½ lbs. per square inch before the atmospheric pressure would be counterbalanced and the piston be in equilibrium.

But the steam gauge would at this time stand at zero, and not show that there was any steam in the cylinder, because the zero of the steam gauge is atmospheric pressure.

When, therefore, the steam gauge showed a pressure of 20 lbs. of steam in the cylinder, there would actually be a pressure of 34½ lbs. of steam per square inch.

The clearance line and the vacuum line must both, therefore, be marked on the diagram when the quantity of steam used is to

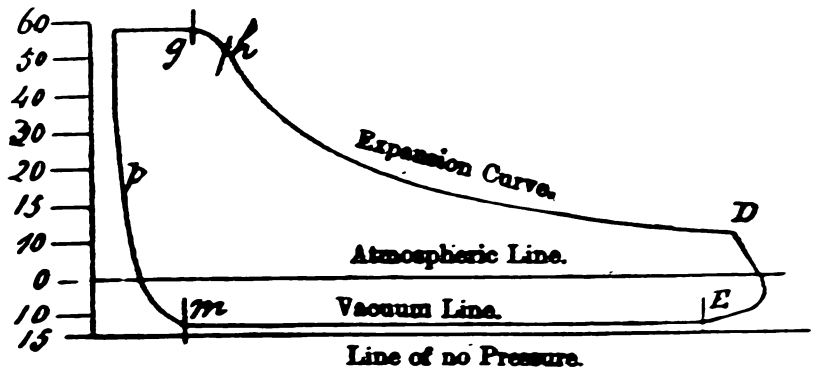

Fig. 3364.

be computed from the diagram, and also when the proper or theoretical expansion curve is to be marked on the diagram.

This is clear, because in finding the expansion curve for a given volume of steam the whole of its volume must be taken into account, and this whole volume is represented by the area inclosed within the clearance line, the steam line, the expansion curve, the exhaust line, and the line of perfect vacuum, or line of no pressure.

The atmospheric line should be drawn after the diagram has been taken, and while the indicator is hot, as the expansion of the indicator affects the position of this line. It is drawn with the steam shut entirely off from the indicator, whose piston therefore has atmospheric pressure on both sides of it.

Whether the engine is condensing or non-condensing, the same amount of steam (all other things being equal) is used, the only difference being that in a condensing engine a greater portion of the steam is available for driving the piston.

If the condenser produced a perfect vacuum, the whole of the steam would be utilized in propelling the piston.

The "line of no pressure," or of perfect vacuum, is marked as far below the atmospheric line as will represent the pressure of the atmosphere, which is, at the sea level, about 14.7 lbs. per square inch when the barometer stands at 29.99 inches.

THE BAROMETER.

A barometer is an instrument for denoting the pressure or weight of the atmosphere, which it does by means of a column of mercury inclosed in a tube, in which there is a vacuum, which may be produced as follows:

A tube having a parallel bore and closed at one end is filled with mercury, and while the finger is placed over the open end of the tube, it is turned upside down and inverted in a cup of mercury that is open to receive the pressure of the atmosphere.

The finger is then removed from the end of the tube and the mercury will fall, leaving a vacuum at its upper end.

The pressure of the atmosphere on the surface of the mercury in the cup forces the mercury up the tube, because the surface of the mercury in the tube has no atmospheric pressure on it, the action being the same as that already described with reference to the principles of action of a pump.

The weight of the atmosphere is equal to the weight of that part of the column of mercury that is above the surface of the mercury in the cup, hence lines may be drawn at different heights representing the weight of the atmosphere, or of any other gas, when the column of mercury stands at the heights denoted by the respective lines.

But as mercury expands by heat, a definite degree of temperature must be taken in marking a column, to represent the weight, this temperature being 32° Fahrenheit.

Similarly, as the weight of the atmosphere varies, according to the height at which it is taken from the surface of the earth, a definite height must be taken.

The sea level is that usually taken, the mean or average atmosphere (at that level) being 14.7 lbs. per square inch.

For higher altitudes, the mean atmospheric pressure in lbs. per square inch may be found by multiplying the altitude or height above sea level by .00053, and subtracting the product from 14.7.

Each pound on the square inch is represented by a height of 2.036 inches of mercury, hence the height of a column of mercury at a temperature of 32° that will balance the mean weight of the atmosphere is 29.92 inches, and to avoid fractions, it is usual (for purposes not requiring to be very exact) to say that the atmospheric pressure at sea level is represented by 30 inches of mercury.

The atmospheric pressure is also, to avoid using fractions, taken roughly at 15 lbs. per square inch at sea level.

Each 2 inches of mercury will, under these conditions, represent 1 lb. of pressure.

Vacuum gauges are based upon the same principles and subject to the same variations as to altitude as mercury gauges or the barometer.

To find the absolute pressure, or pressure above zero, or a perfect vacuum, we may add the pressure of the boiler steam gauge to that shown by the mercury gauge or barometer.

In Fig. 3364 the line of no pressure is marked at 15 lbs. per square inch below the atmospheric line of the diagram, the atmospheric pressure being for convenience taken as 15 lbs. above a perfect vacuum.

The line of no pressure serves as a guide in showing the effectiveness of the condenser, as well as for computing the volume of steam used, but is not necessary in computing the horse power of a non-condensing engine, because the gauge pressure has its zero marked to correspond with the atmospheric pressure.

In computing the consumption of steam or water from the diagram, therefore, both the clearance line and the line of no pressure must be marked on the diagram, and lines of the diagram extended so as to include them, thus accounting for all the steam that leaves the steam chest from the piston stroke.

Indicator springs are varied in strength to suit the pressure of steam they are to be used for.

The scale of the spring is the number of lbs. pressure per square inch represented by a vertical motion of the pencil; thus, a 40 lb. spring is one in which a pressure of steam of 40 lbs. per square inch would cause the piston to rise an inch above the atmospheric line of the diagram.

The strength or tension of the spring is so adjusted as to cause the diagram to be about 2½ inches high, let the steam pressure be what it may. The following are the scales of springs of the Thompson and Tabor indicator.

THOMPSON INDICATOR.

Scale of spring.	Used for pressure above atmosphere if not more than
15 lbs.	21 lbs. per square inch.
20 "	38 " " " "
30 "	94 " " " "
40 "	90 " " " "
60 "	143 " " " "

TABOR INDICATOR.

10 lbs.	14 " " " "
12 "	20 " " " "
16 "	30 " " " "
20 "	40 " " " "
24 "	48 " " " "
30 "	60 " " " "
32 "	64 " " " "
40 "	80 " " " "
48 "	96 " " " "
50 "	100 " " " "
60 "	120 " " " "
64 "	128 " " " "
80 "	160 " " " "

A spring that is strong enough for a given pressure may be used for any less pressure.

The height of the diagram will, however, be less, and accuracy is best secured by having the diagram up to the limit of about 2½ inches, using a spring that is light enough to secure this result.

Diagrams of high speed engines, however, will have their lines more regular in proportion as a stronger spring is used.

This occurs because the spring, being under more tension, is less liable to vibration.

An indicator requires careful cleaning and oiling with the best of oil, as the slightest undue friction seriously impairs the working of the instrument.

Instructions upon the care of the instrument, and how to take it apart, etc., are usually given by the makers of the indicator.

There are various methods of giving to the paper drum of the indicator a motion coincident with that of the engine piston, but few of them give correct results.

Reducing levers, such as shown in Fig. 3365, are constructed as follows:

Fig. 3365 represents a reducing lever with the indicators attached. A C is a strip of pine board three or four inches wide and about one and one-half times as long as the stroke of the engine.

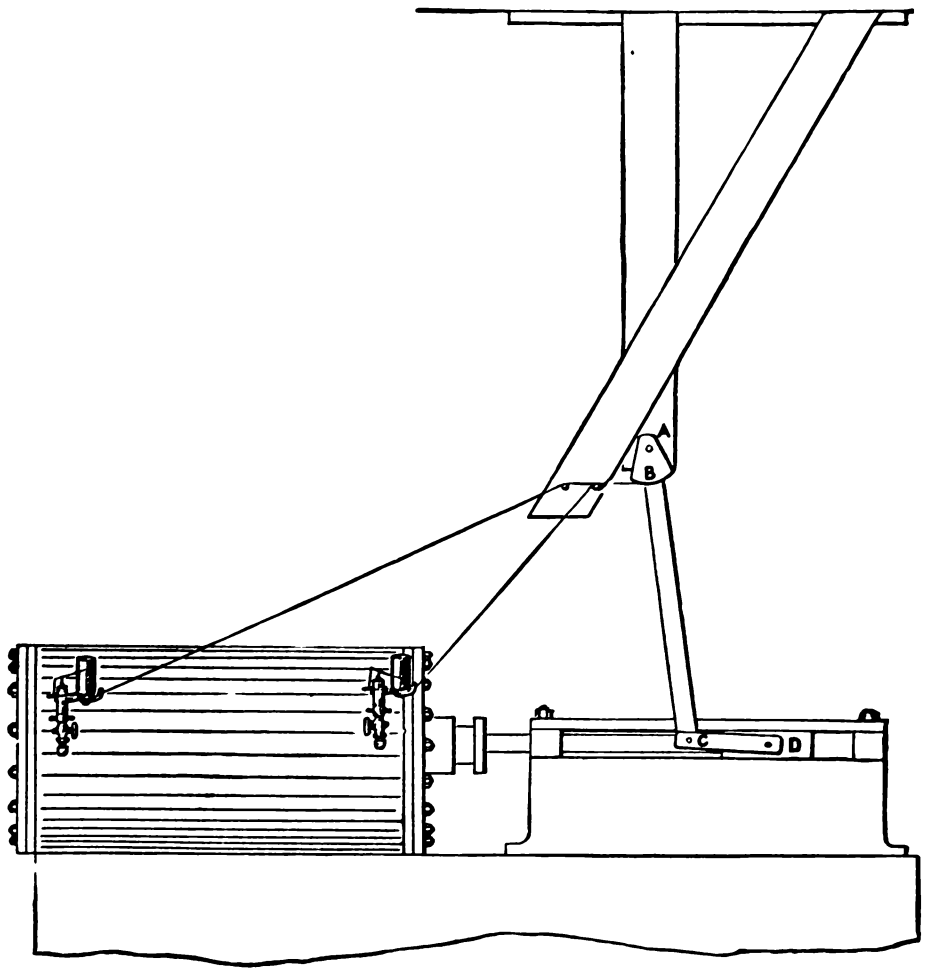

Fig. 3365.

It is hung by a screw or small bolt to a wooden frame attached overhead. A link C one-third as long as the stroke is attached at one end to the lever, and at the other end to a stud screwed into the cross head, or to an iron clamped to the cross head by one of the nuts that adjust the gibs, or to any part of the cross head that may be conveniently used. The lever should stand in a vertical position when the piston is at the middle of the stroke. The connecting link C, when at that point, should be as far below a horizontal position as it is above it at either end of the stroke. The cords which drive the paper drums may be attached to a screw inserted in the lever near the point of suspension; but a better plan is to provide a segment, A, B, the centre of which coincides with the point of suspension, and allow the cord to pass around the circular edge. The distance from edge to centre should bear the same proportion to the length of the reducing lever as the desired length of diagram bears to the length of the stroke. On an engine having a stroke of 48 inches, the lever should be 72 inches, and the link C 16 inches in length, in which case, to obtain a diagram 4 inches long, the radius of the segment would be 6 inches. It is immaterial

what the actual length of the diagram is, except as it suits the operator's fancy, but 4 inches is a length that is usually satisfactory. It may be reduced to advantage to 3 inches at very high speeds. The cords should leave the segment in a line parallel with the axis of the engine cylinder.

The pulleys over which they pass should incline from a vertical plane and point to the indicators wherever they may be located. If the indicators and the reducing lever can be placed so as to be in line with each other, the pulleys may be dispensed with and the cords carried directly from the segment to the instruments, a longer arc being provided for this purpose. The arm which holds the carrier pulleys on each indicator should be adjusted so as to point in the direction in which the cord is received.

In all arrangements of this kind the reduced motion is not mathematically exact, because the leverage is not constant at all points of the stroke.

Pantagraph motions have been devised for overcoming these defects. Two forms have been successfully used, which, if well made, well cared for, and properly handled, reproduce the motion on the reduced scale with perfect accuracy. They are shown in working position in Figs. 3366 and 3367.

Fig. 3366 represents the manner of attaching the pantagraph motion, or *lazy tongs*, as it is sometimes called, when the indicators

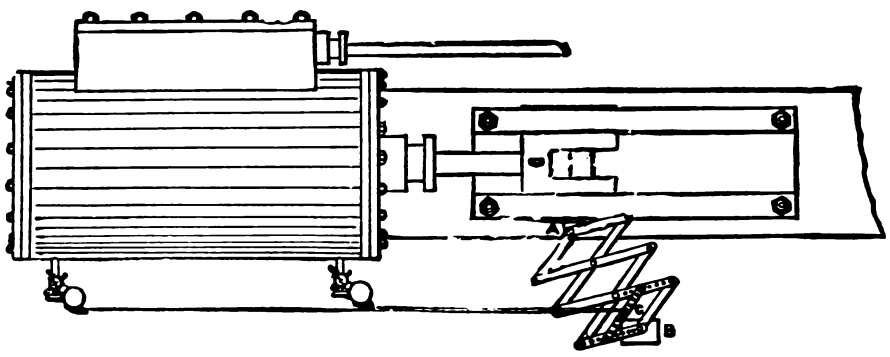

Fig. 3366.

are applied to the side of the cylinder. It works in a horizontal plane, the pivot end being supported by a post B erected in front of the guides, and the working end receiving motion from an iron attached to the cross head.

By adjusting the post to the proper height and at a proper distance in front of the cross head, the cords may be carried from the cord pin C to the indicators, without the intervention of carrier pulleys.

If the indicators are attached to the side of the cylinder, the simplest form of pantagraph shown in Fig. 3367 may be used. The working end A receives motion from the cross head, and the front piece B is attached to the floor. The cord pin D is fixed in line be-

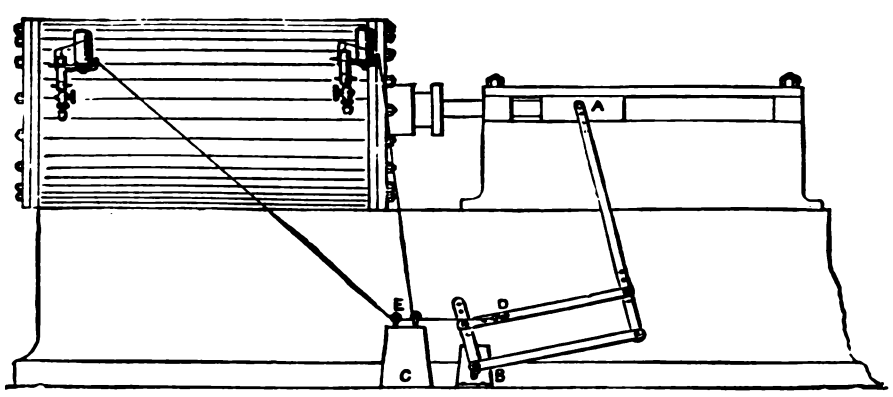

Fig. 3367.

tween the pivot and the working end, and the pulleys E, attached to the block C, guide the cords to the indicators.

The indicator rigging that gives the best results at high speeds is a plain reducing lever like that first described, provided at the lower end with a slot that receives a stud, screwed into the cross head. The length of the lever should be one and one-half times the engine stroke, as given on the preceding page.

Whatever plan is followed, it is desirable to avoid the use of long stretches of cord. If the motion must be carried a long distance, strips of wood may often be arranged in their place and operated with direct connections. Braided linen cord, a little in excess of one-sixteenth of an inch in diameter, is a suitable material for indicator work.

To take a diagram, a blank card is stretched smoothly upon the paper drum, the ends being held by the spring clips. The driving cord is attached and so adjusted that the motion of the drum is central.

For convenience two diagrams, one from each end of the cylinder, may be made on the same card, as shown in Fig. 3368.

TESTING THE EXPANSION CURVE.

The usual manner of testing the expansion curve of a diagram is to compare it with a curve representing Marriotte's law for the expansion of a perfect gas.

A theoretic expansion curve that will accord with Marriotte's law may be constructed on the diagram by the following method:

The diagram, as drawn by the indicator, will have the atmos-

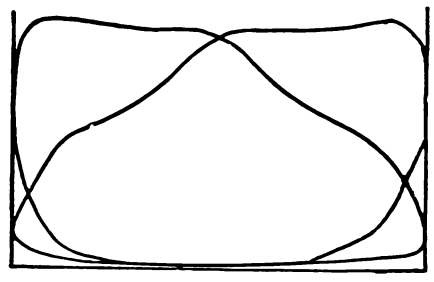

Fig. 3368.

pheric line upon it, and from this as a basis we may mark in the line of no pressure or line of perfect vacuum.

To do this we draw, beneath the atmospheric line, a line as far beneath it as will represent the atmospheric line, on the same scale as the spring used, in the indicator, to draw the diagram.

Suppose, for example, that a 30 lb. spring was used, and assuming the atmospheric pressure to be 15 lbs. per inch, then the line of no pressure would be drawn half an inch below the atmospheric line, because 15 lbs. pull on the spring would cause it to distend half an inch.

The clearance line must then be drawn in, according to directions that have already been given.

The next thing to do is to divide the length of the diagram into any convenient number of equal parts, by vertical lines parallel to, and beginning at, the clearance line, as shown in Fig. 3369. These lines are numbered as shown, ten of them being used because that is a convenient number, but any other number would do.

We next decide at which part of the diagram its expansion curve and the test curve shall touch, and in this example we have chosen that it shall be at line 10.

We have now to find what pressure the length of line 10 represents on the scale of the indicator spring, which in this case we will suppose to be 25 lbs., the line measuring $\frac{25}{30}$ of an inch, and a 30 lb. spring having been used to draw the diagram. Next multiply the pressure (25 lbs.) by the number of the line (10), and divide the product (250) by the number of each of the other lines in succession, and the quotient will be the pressures to be represented by the lines.

For example, for line 9 we have that 250 divided by 9 gives 27.7, hence line 9 must be long or high enough to represent a pressure of 27.7 lbs. above a perfect vacuum, or in this case $\frac{27.7}{30}$ of an inch.

For line 8 we have that 250 divided by 8 gives 31.25 lbs., hence line 8 must be high enough to represent a pressure of 31.25 lbs. above a perfect vacuum.

The atmospheric line is, in this case, of no other service than to form a guide wherefrom to mark in the line of no pressure, or of perfect vacuum.

Now take the case of line 5, and 250 divided by 5 gives 50, hence the height of line 5 must represent a pressure above vacuum of 50 lbs.

Having carried this out for all the lines from line 10 to line 1,

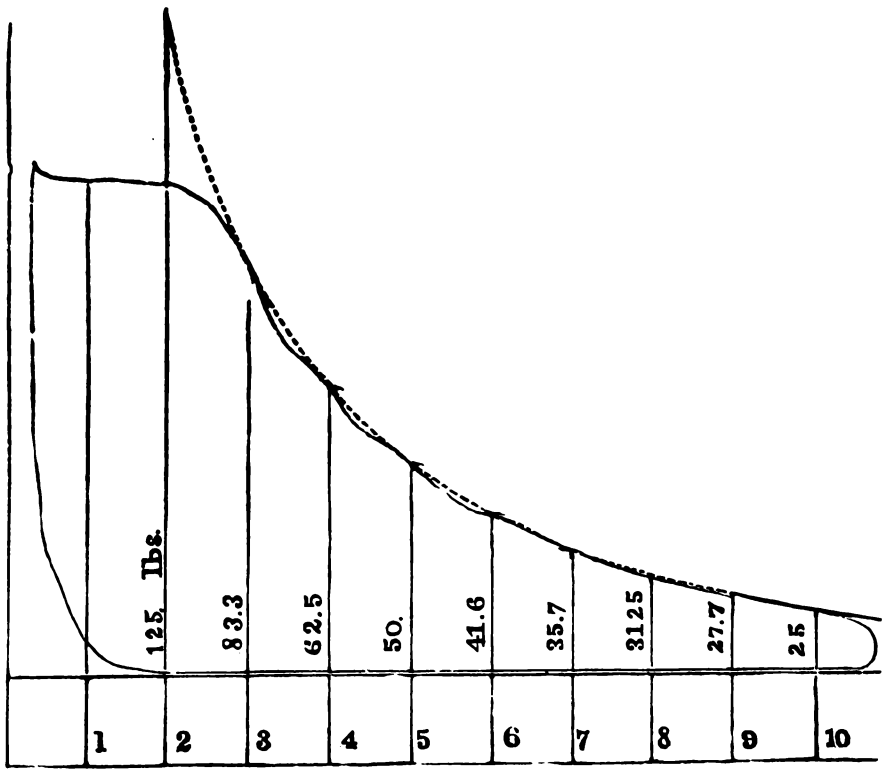

Fig. 3369.

we draw in the true expansion curve, which will touch the tops of all the lines.

Another method of drawing this curve is shown in Fig. 3370. Having drawn the clearance line B C, and vacuum line D C, as before and chosen where the curves shall touch (as at *a*), then draw from *a* a perpendicular *a* A.

Draw line A B, parallel to the vacuum line, and at any convenient height above or near the top of the diagram.

From A draw A C, and from *a* draw *a b* parallel to D C, then from its intersection with A C, erect the perpendicular *b c*, locating on A B, the theoretical point (*c*) of cut-off.

From a number of points on A, B (which may be located without regard to equally spacing them), such as E, F, G and H, draw lines to C, and also drop perpendicular lines, as E *e*, F *f*, G *g*, H *h*.

From the intersection of E C with *b c*, draw a horizontal line to *e*. From the intersection of F C with *b c*, draw a horizontal line, and so on; and where these horizontals cut the verticals (as at *e*, *f*, *g*, *h*) are points in the curve, which begins at *c*, and passes through *e*, *f*, *g*, *h*, to *a*.

But this curve does not correctly represent the expansion of steam. It would do so if the steam remained or was maintained at a uniform temperature; hence it is called the isothermal curve, or curve of same temperature. But in fact steam and all other elastic fluids fall in temperature during their expansion, and rise during compression, and this change of temperature slightly affects the pressure.

A curve in which the combined effects of volume and resulting temperatures is represented is called the *adiabatic* curve, or curve of no transmission; since, if no heat is transmitted to or from the fluid during change of volume, its sensible temperature will change according to a fixed ratio, which will be the same for the same fluid in all cases.

A sufficiently close approximation to the adiabatic curve to enable the non-professional engineer to form an idea of the difference between the two may be produced by the following process:

Taking a similar diagram to that used for the foregoing illustrations, as in Fig. 3371. Fix on a point A near the terminal, where the total pressure is 25 pounds. As before, this point is chosen in order that the two curves may coincide there.

Any other point might have been chosen for the point of coincidence; but a point in that vicinity is generally chosen, so that the result will show the amount of power that should be obtained from the existing terminal. This point is 3.3 inches from the clearance line, and the volume of 25 pounds 996, that is, steam of that pressure has 996 times the bulk of water.

Now if we divide the distance of A from the clearance line by 996, and multiply the quotient by each of the volumes of the other pressures indicated by similar lines, the products will be the respective lengths of the lines measured from the clearance line; the desired curve passing through their other ends. Thus, the quotient of the first or 25 lb. pressure line divided by 996 is .003313; this, multiplied by 726, the volume of 35 lbs. pressure, gives 2.4, the length of the 35 lb. pressure line; and so on for all the rest.

The application of either of the above curves will show that some diagrams are much more accurate than others, even though taken from engines of the same design and quality of workmanship.

As a general rule, those from large engines will be more correct than from small ones, and those from high more correct than from low speeds, and in either case efficiently covering the steam pipes and jacketing the cylinder, to prevent condensation, will improve the diagram.

The character of the imperfection in the expansion curve, shown by the application of a test curve, is generally too high a terminal pressure for the point of cut off, the first part of the curve being generally the most correct, and nearly all the inaccuracy appearing in the last half.

The usual explanation of this is, that the steam admitted during the live steam period condenses because of having to heat the cylinder, and that this water of condensation re-evaporates during the latter part of the stroke when this water of condensation is at a higher temperature than the expanded steam, and thus increases the pressure.

A leaky admission valve may generally, however, be looked for (or else wet steam), if the expansion curve rises much during its lower half.

TO CALCULATE THE HORSE POWER FROM A DIAGRAM.

In calculating the horse power of an engine, the only assistance given by the indicator is, that it provides a means of obtaining

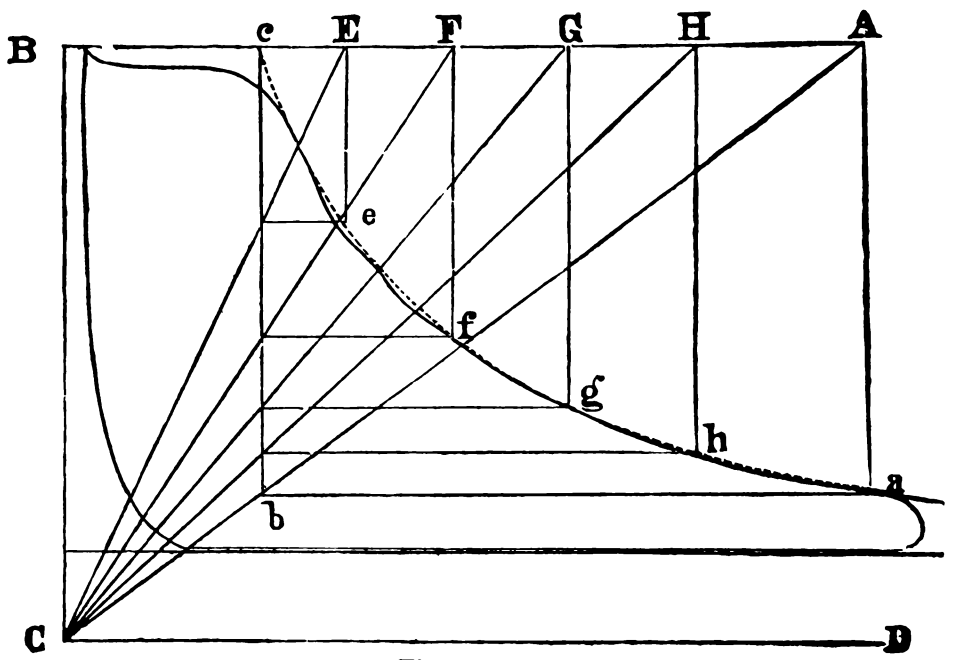

Fig. 3370.

the average pressure of the steam throughout the piston stroke.

There are two methods of doing this, one by means of a planimeter or averaging instrument, and the other by means of lines called *ordinates*.

The ordinates or lines are drawn at a right angle to the atmos-

pheric line, as shown in Fig. 3372, and each line is taken to represent the average height or length of one-half of the space between itself and the next lines.

Suppose, for example, that we require to get the area of that part of the diagram that lies between the dotted lines in the figure, and it is clear that the average height of this part of the diagram is represented by the height of the full line between them.

Any number of ordinates may be used, and the greater their number the greater the accuracy obtained. It is, however, usual to draw 10.

The end ordinates A and D, in the figure, should be only half the distance from the ends of the diagram that they are from the next ordinate, as will be seen when it is considered that the ordinate is in the middle of the space it represents.

The ordinates being drawn their lengths, are added together, and the sum so obtained is divided by the number of ordinates, which gives the average height of the ordinates.

Suppose, then, that the average height of the ordinate is two inches, and that the scale of the spring of the indicator that took the diagram was 30 lbs., then the average pressure, shown by the diagram, will be 60 lbs. per square inch. Or in other words, each inch in the height of the ordinate represents 30 lbs. pressure per square inch.

The mean effective pressure having been found, the indicated horse power (or I. H. P. as it is given in brief) is found by multiplying together the area of the piston (minus half the area of the piston rod when great accuracy is required) and the travel of the piston in feet per minute, and dividing the product by 33,000, an example having been already explained.

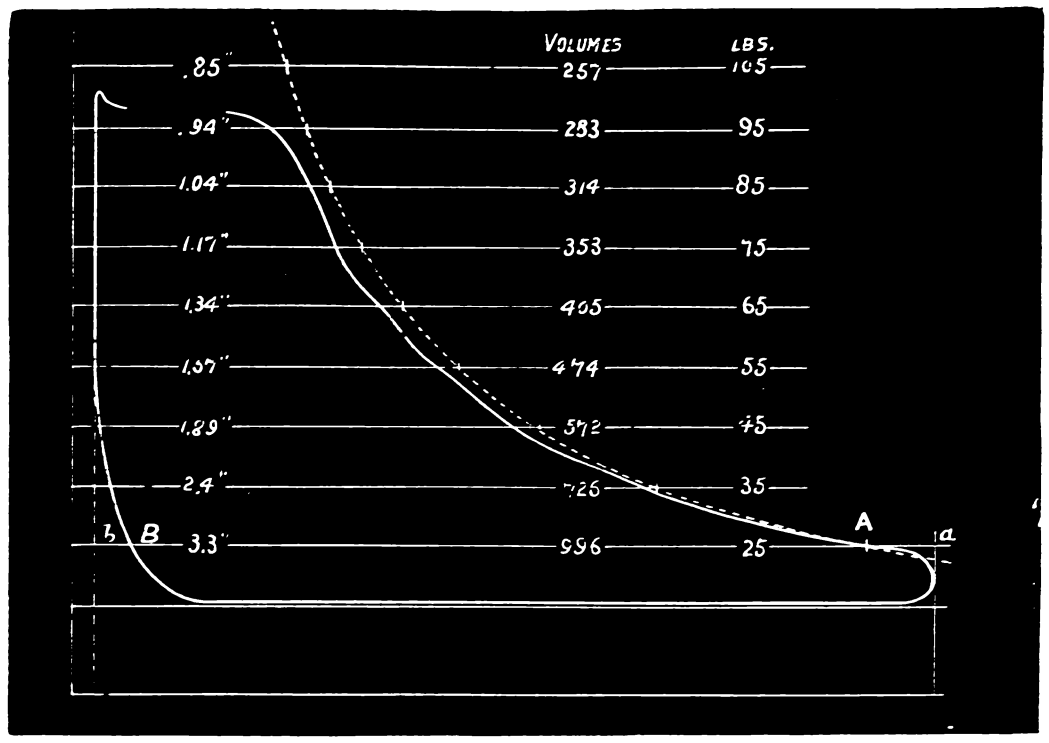

Fig. 3371.

It is to be observed, however, that when great accuracy is required a diagram should be taken from each end of the cylinder, as the mean effective pressure at one end of the cylinder may vary considerably from that at the other.

This will be the case when a single valve is used with equal lap, because, in this case, the point of cut off will vary on one stroke as compared with the other, which occurs by reason of the angularity of the connecting rod.

When cut off valves or two admission valves are used, it may occur from improper adjustment of the valves. It occurs in all engines, because on one side of the piston the piston rod excludes the

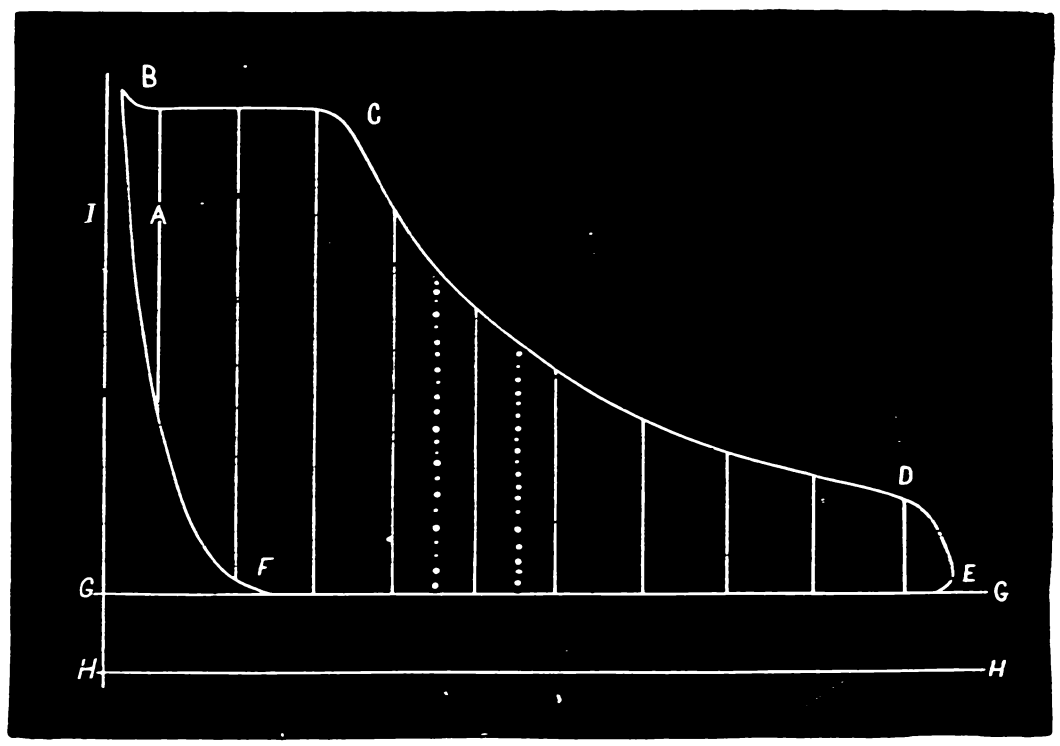

Fig. 3372.

steam from the piston face, unless, indeed, the piston rod passes through both covers, in which case the rod area must be subtracted from the piston area.

If the expansion curve in a diagram from a non-condensing engine should pass below the atmospheric line, then the mean effective pressure of that part of the card that is below the atmospheric line must be subtracted from the mean effective pressure of that

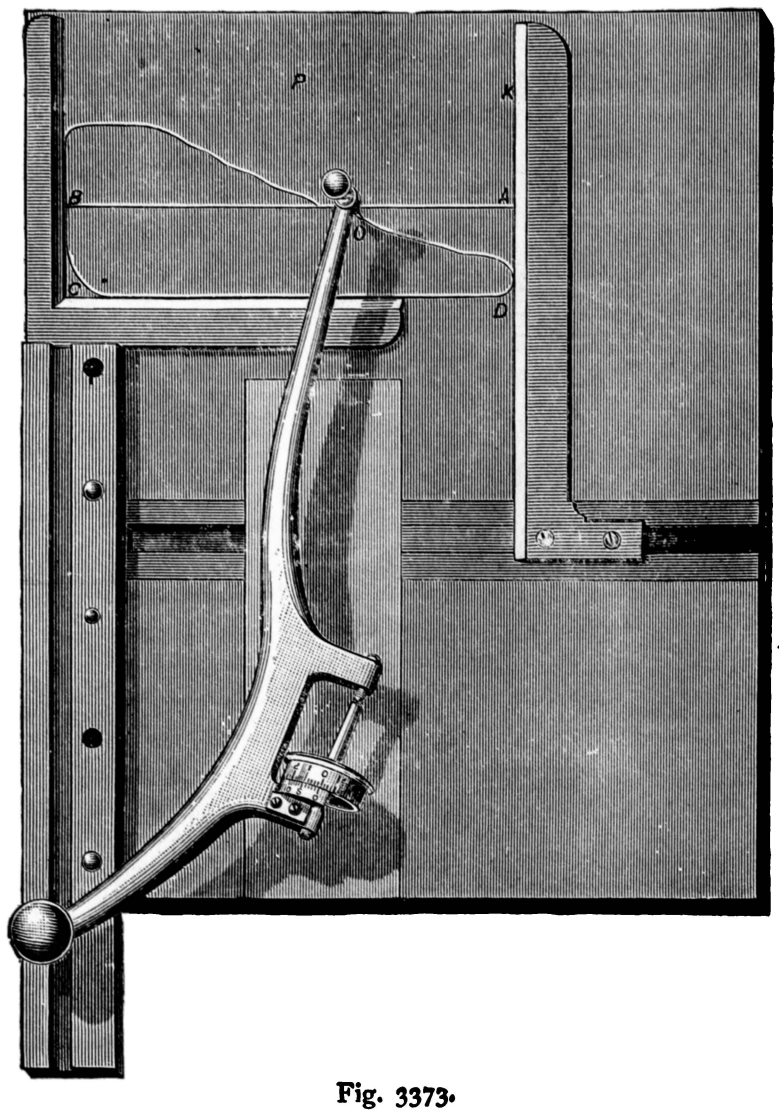

Fig. 3373.

part that is above the atmospheric line, because the part below represents back pressure or pressure resisting the piston motion.

The planimeter affords a much quicker and more accurate method of obtaining the average steam pressure from a diagram.

Coffin's averaging instrument or planimeter is shown in Fig. 3373. The diagram is traced by the point O, and the register wheel gives the area of the diagram.

A quick method of approximating the mean effective pressure (or M. E. P. as it is called) of a diagram is to draw a line *a b*, in Fig. 3374, touching the expansion curve at *a*, and so inclined that the space *e* is, as near as the eye can judge, equal to the space *d*. Then the line *f* drawn in the middle of the diagram, and measured on the scale of the spring that was used to take the diagram, represents the mean effective pressure, or M. E. P. of the diagram.

CALCULATING THE AMOUNT OF STEAM OR WATER USED.

The amount of water evaporated in the boiler is not accounted for by an indicator diagram or card, and the full reasons for this are not known.

It is obvious, however, that the loss, from the steam being unduly wet or containing water held in suspension, is not shown by the diagram, and this amount of loss will vary with the conditions.

Thus the loss from this cause will be less in proportion as the point of cut off occurs earlier in the stroke, because, as the water is at the same temperature as the steam, it will, as the temperature of the steam reduces from the expansion, evaporate more during the expansion period, doing so to a greater extent in proportion as the cut off is early, on account of there being a wider variation between the temperature of the steam at the point of cut off and at the end of the stroke. On the other hand, however, in proportion as the cut off is earlier, the proportionate loss from condensation during the live steam period is greater, because a greater length of the cylinder bore is cooled during the expansion period, and it has more time to cool in.

Whatever steam is saved by the compression, from the exhaust, must be credited to the engine in calculating the water consumption from the indicator card or diagram, since it fills, or partly fills, the clearance space.

In engines which vary the point of cut off, by varying the travel of the induction or admission valve, the amount of compression is variable with the point of cut off, and increases in proportion as the live steam period diminishes; hence to find the actual water or steam consumption per horse power per hour, diagrams would require to be taken continuously from both ends of the cylinder during the hour; assuming, however, that the point of cut off remains the same, that the amount of compression is constant, that the steam is saturated, and neither wet nor superheated, steam and the water consumption may be computed from the diagram as follows:

WATER CONSUMPTION CALCULATIONS.—An engine driven by water instead of steam, at a pressure of 1 lb. per square inch, would require 859,375 lbs. per horse power per hour; the water being of such temperature and density that 1 cubic foot would weigh 62½ lbs. If the mean pressure were more than 1 lb., the consumption would be proportionately less; and, if steam were used, the consumption would be as much less as the volume of steam used was greater than an equal weight of water. Hence, if we divide the number 859,375 by the mean effective pressure and by the volume of the terminal pressure, the result will be the theoretical rate of water consumption in pounds per I. H. P. per hour.

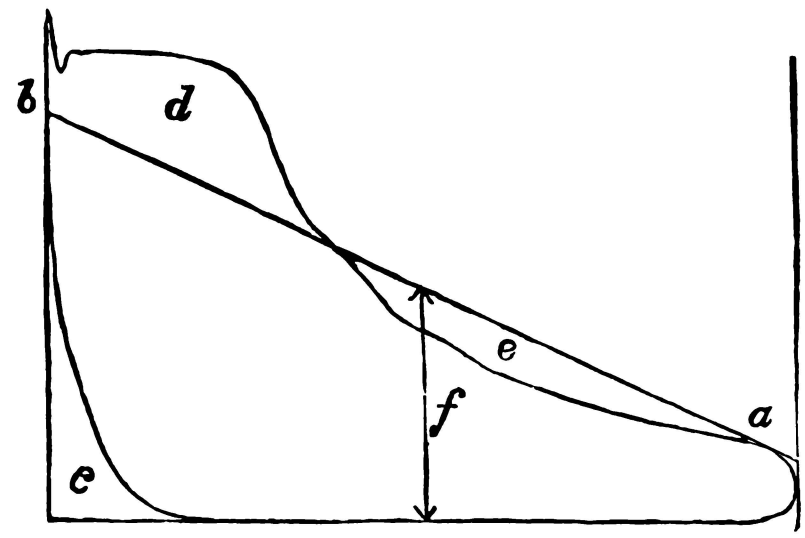

Fig. 3374.

For the terminal pressure we may take the pressure at any convenient point in the expansion curve near the terminal, as at A, Fig. 3375, in which case the result found must be diminished in the proportion that the portion of stroke remaining to be made, A *a*, bears to the whole length of the stroke *a b*; and it may also be diminished by the proportion of stroke remaining to be made after the pressure at A has been reached in the compression curve at B. In other words, A B is the portion of the stroke *a b*, during which steam at the pressure at A is being consumed. Hence the result obtained by the above rule is multiplied by A B, and the product divided by *a b*.

To illustrate, suppose the mean effective pressure of the diagram to be 37.6 lbs., and the pressure at A, 25 lbs., of which the volume is 996.

Then $\frac{859,375}{37.6 \times 996} = 22.94$ pounds water per I. H. P. per hour, the rate that would be due to using an entire cylinder full of steam at 25 pounds pressure every stroke. But as the period of consumption is represented by B A (*b a* being the stroke), the following correction is required:

$\frac{22.94 \times 3.03}{3.45''} = 20.15$; 3.03 inches being the portion B A, and 3.45 inches being the whole length *b*, *a*. This correction allows for the effects of clearance as well as compression, since, if more

clearance had existed, the pressure at A would not have been reached till later in the stroke, and the consumption line B A would have been longer.

But such a rate can never be realized in practice. Under the best attainable conditions, such as about the load indicated on the diagram, or more on a large engine with steam tight valves and piston, and well protected cylinder and pipes, the unindicated loss will seldom be less than 10 per cent., and it will be increased by departure from any of the above conditions to almost any extent. It will increase at an accelerating ratio as the load is diminished, so that such calculations applied to light load diagrams would be deceptive and misleading; in fact, they have but little practical value, except when made for comparison with tests of actual consumption for the purpose of determining the amount of loss under certain given conditions.

DEFECTIVE DIAGRAMS.

In seeking the causes that may produce a defective diagram, the following points should be remembered:

caused by a leaky piston, by a valve that leaks on the exhaust side but not on the steam side, or if the exhaust valve is separate from the steam valve, it may leak while the steam valve is tight.

It may also be caused by the cylinder being unduly cooled, as from water accumulating in a steam jacket.

There are many defects in the adjustment of the valve gear, or of improper proportion in the parts, that may be clearly shown by a diagram, while there are defects which might exist and that would not be shown on the diagram.

It is possible, for example, that a steam valve and the engine piston may both leak to the same amount, and as a result the expansion curve may appear correct and not show the leak.

Insufficient valve lead would be shown by the piston moving a certain portion of its stroke before the steam line attained its greatest height in Fig. 3376, in which from A upwards, the admission line, instead of rising vertically, is at an angle to the right, showing that the piston had moved a certain portion of its stroke before full pressure of steam was admitted.

That too small a steam port or steam pipe did not cause this defect may be known from the following reasoning:

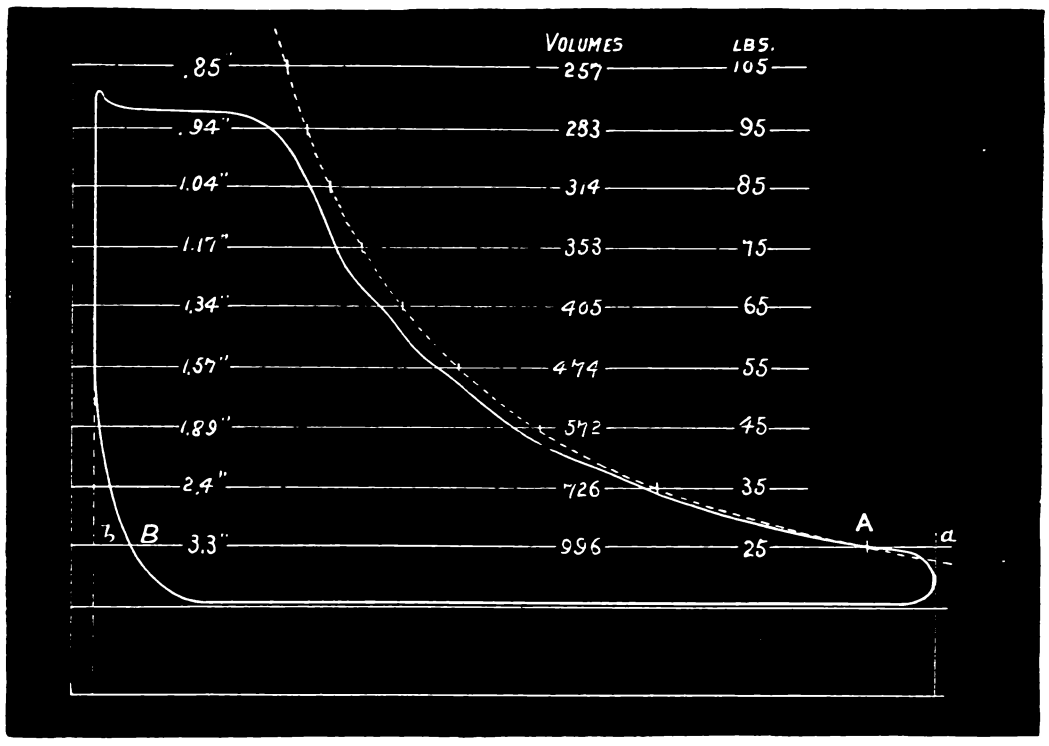

Fig. 3375.

The indicator must be kept in perfect order, thoroughly clean and well lubricated, so that its parts will move freely. It should always be cleaned throughout after using.

The motion of the indicator drum should be an exact copy, on a reduced scale, of that of the piston at every point in the stroke.

The steam pipes from the cylinder to the indicator, if any are used, must be large enough to give a free and full pressure of steam, and care must be taken that the water of condensation does not obstruct them or enter the indicator.

The cord should be as strong as possible, or if long, fine wire should be substituted.

The pencil should be held to the card with just sufficient force to make a fine line with a sharp pencil.

The diagram should be as long as the atmospheric line, any difference in this respect showing unequal tension of the cord, probably from unequal pressure of the pencil to the paper or card.

A fall in the steam line could arise from too small a steam pipe, and this could be tested by a diagram taken from the steam chest. It could also occur from too small a steam port or an obstructed steam passage as well as from a leaky piston.

An expansion curve that is higher than it should be may arise from a leaky valve, letting in steam after the cut off had occurred, or if at the later point of expansion curve, it may be caused by the steam being wet or containing water, which evaporates as the temperature falls from the expansion.

An expansion curve that is lower than it should be may be

The port opened when the pencil was at A, which shows that the valve had lead. At this time the piston was near the dead centre and moving slower than it was when the pressure reached its highest point on the diagram, and since the steam line is fairly parallel with the atmospheric line, it shows that the port was large enough to maintain the pressure when the piston was travelling fast, and therefore ample when the piston was moving slow.

The remedy in this case is to set the eccentric back.

With less compression the point A would be lower.

Excessive lead is shown in Fig. 3377 by the loop at A, where the compression curve extends up to the steam line, and the lead carries the admission line above it, because of the piston moving against the incoming steam.

To mark in the theoretical compression curve, the vacuum line and the clearance line must be drawn in as in the figure, and ordinates must be drawn.

According to the diagram, in Fig. 3377, the compression is clearly defined to have begun at C, and at that time the space filled by steam is represented by the distance from C to the clearance line. The pressure above vacuum (or total pressure) of the steam in the cylinder when the compression began is represented by the length or height of the dotted line 1.

Now suppose the piston to have moved from the point C, where compression began, to line 2 (which is midway between line 1 and the clearance line), and as the compressed steam occupies one-half the space it did when the piston was at C, therefore the steam

pressure will be doubled, and line 2 may be drawn making it twice as high as line 1.

Line 2 is now the starting point for getting the next ordinate, and line 3, must be marked midway between line 2 and the clearance line, and twice as high as line 2, because at line 3 the steam will occupy half the space it did at line 2. Line 4 is obviously midway between line 3 and the clearance line.

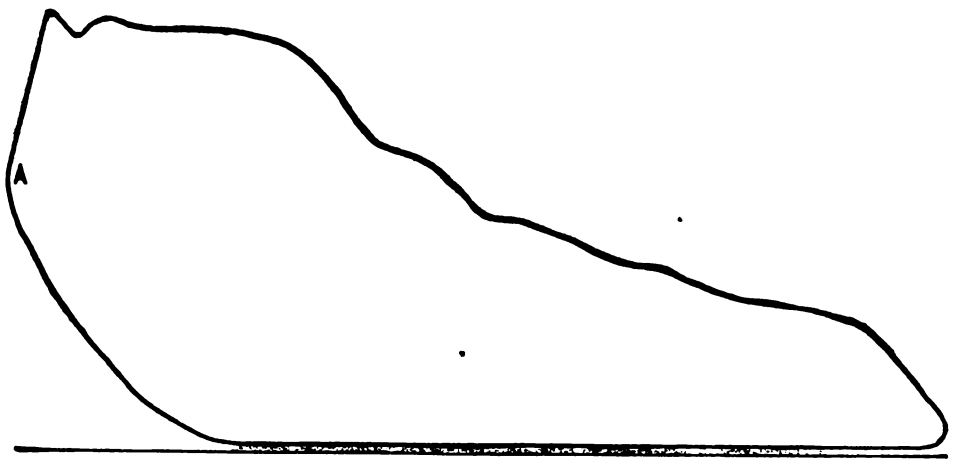

Fig. 3376.

Through the tops of these lines we may draw the theoretical compression curve, which is shown dotted in.

To find the amount of steam actually saved by the compression, we have to consider the compression curve only, beginning at the point of the diagram where it is considered that the compression actually began, and ending where the compression line joins the admission line, and the horizontal distance between these two points represents the length of the cylinder bore filled by the compression.

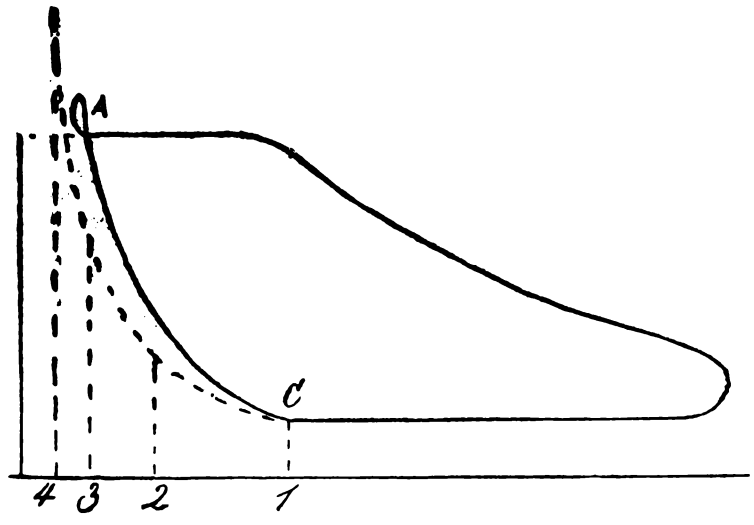

Fig 3377.

To find the average amount to which the steam is compressed, we must draw within this length of the diagram, and within the boundaries of the compression curve, and the line of no pressure ordinates corresponds to those given for finding the average shown pressure of a diagram, as explained with reference to that subject, taking care to have the end ordinates spaced half as wide as the intermediate ones, as explained with reference to Fig. 3372.

CHAPTER XXXIX.—AUTOMATIC CUT OFF ENGINES.

AN automatic cut off engine is one in which the valve gear is so acted upon by the governor as to keep the speed of the engine uniform under variations of the load the engine drives, and notwithstanding variations in the boiler pressure. This it accomplishes by varying the point in the piston stroke at which the live steam is cut off. This is economical because it enables the engine to use the steam more expansively than is possible with engines having throttling governors, which govern the engine speed by wire drawing the steam.

There are two principal forms of automatic cut off engines, first, those in which the steam valve spindle or rod is released from the parts that move it to open for admission, while dash pots, weights, or springs close the valve to effect the cut off; and second, those in which the travel of the valve is varied so as to alter the point of cut off.

The first usually employ fly ball governors which actuate cams or stops to trip the valves for the steam cylinders. The second usually employ wheel governors or speed regulators, as they are sometimes termed.

The distinctive features in the action of the first, of which the Corliss engine is the most important, is that as two admission and two exhaust valves are used, therefore the amount of the valve lead, the point of exhaust and amount of the compression remain the same at whatever point in the piston stroke the cut off may occur; whereas in the second, the lead increases, the cut off occurs earlier, and the compression increases in proportion as the cut off occurs earlier in the piston stroke. In this class of engine the steam valve travels as quickly when opening the steam port for a short and early period of cut off as it does for a late one, hence the amount of steam port opening is as full, with reference to the piston motion, for an early as it is for a late point of cut off. In other words, there is the same amount of steam port opening for the first, second, third, and fourth inch of piston motion, let the point of cut off occur at whatever point in the piston motion it may. In engines which vary the point of cut off by reducing the travel of the slide valve, this is accomplished by using double ported valves or griddle valves.

Fig. 3378 represents the arrangement of the valves in a Corliss engine, V and V^1 being the steam valves and V^2 and V^3 the exhaust valves. These valves, it will be seen, extend crossways of the cylinder and are circular. In the figure the valves are shown in the position they would occupy when the piston was at the crank end of the cylinder, as in the figure.

The principles of a Corliss valve gear will be understood from the following, which is derived from a book by the author of this work, and entitled *Modern Steam Engines.*

In 3379 and 3380 the valve gear (which is the distinctive feature of the engine) is represented with the parts in the position they occupy when the cut off occurs at half stroke, the piston having moved from the head end of the cylinder. In Figs. 3381 and 3382 the parts are shown in position with the crank on the dead centre and the piston at the crank end of the cylinder, valve *z* having opened its port to the amount of the lead.

Referring to Fig. 3379, motion from the eccentric is imparted by the rod M to the wrist plate Y, to which are connected the rods C, C′, for operating the admission valves, whose shafts are seen at S, S′, and the rods F, F′, for operating the exhaust valves, whose shafts are seen at T, T′.

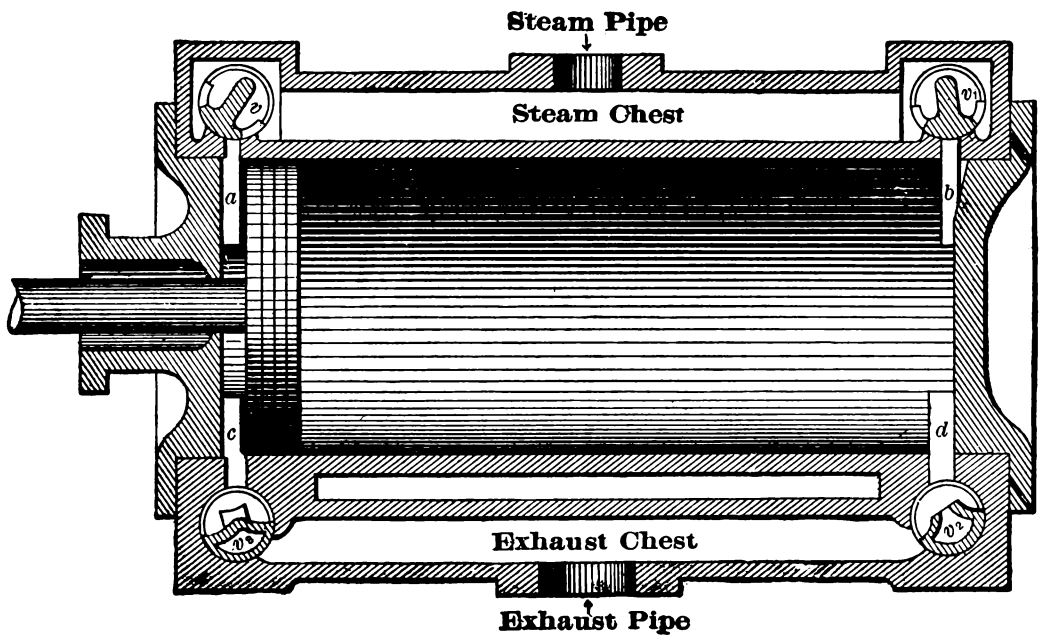

Fig. 3378.

The mechanism for the steam or admission valves may be divided into three elements: first, that for operating the valve to open the port for admission; second, that for closing the valve to effect the cut off; and third, that which determines the point in the stroke at which the cut off shall occur.

The first consists of the rod M, wrist plate Y, and the rods C and C′, which operate the bell cranks *r r*, *r′ r′* which are loose on the valve shafts S, S′. Upon the ends of bell cranks *r r*, *r′ r′*, are pivoted latch links *u*, *u′*, which have in them a recess for the latch blocks, of which one is seen at *e* (the rod R′ and its connection with the valve stem being shown broken away to expose *e* to view). During the admission the latch block abuts against the end *y* of the recess *w* and is tripped therefrom by the cam *n′*. The ends of arms *g* of the latch links abut against the hub of the arms *d*, *d′*, upon which are cams *n*, *n′*, and at *a*, *a′* are springs for keeping the ends *g* of latch links *u*, *u′* against the hubs and cams of *d*, *d′*.

Referring now to the valve mechanism at the head end only, suppose the piston to be at the head end of the cylinder, and latch block *e* will be seated in the recess provided in *a′* to receive it, and

as the bell crank moves, the latch block will be raised by the latch link, which is carried by a crank arm corresponding to that seen at x at the crank end of the cylinder, and as this crank arm is fast upon the valve spindle, the lifting of e will open the valve for admission. As soon, however, as the end g of the latch link meets the cam n', the latch link will be moved so that the end y of its recess will leave contact with the latch block e and the dash pot will cause rod R' to descend instantaneously and close the valve, thus effecting the cut off.

cupy at the instant the cut off is to occur, therefore the cam n' has just tripped the latch link, and the end of e has just left contact with the end y of the recess w in the latch link u'.

The point in the stroke at which the tripping of u' from e will occur and effect the cut off is determined by the governor, because d' is connected to the governor through the rod G'. In proportion as the governor balls rise, d' is moved from left to right, and the end of cam n' meets g earlier, or, vice versa, in proportion as the governor balls fall, the arm d' is moved to the left.

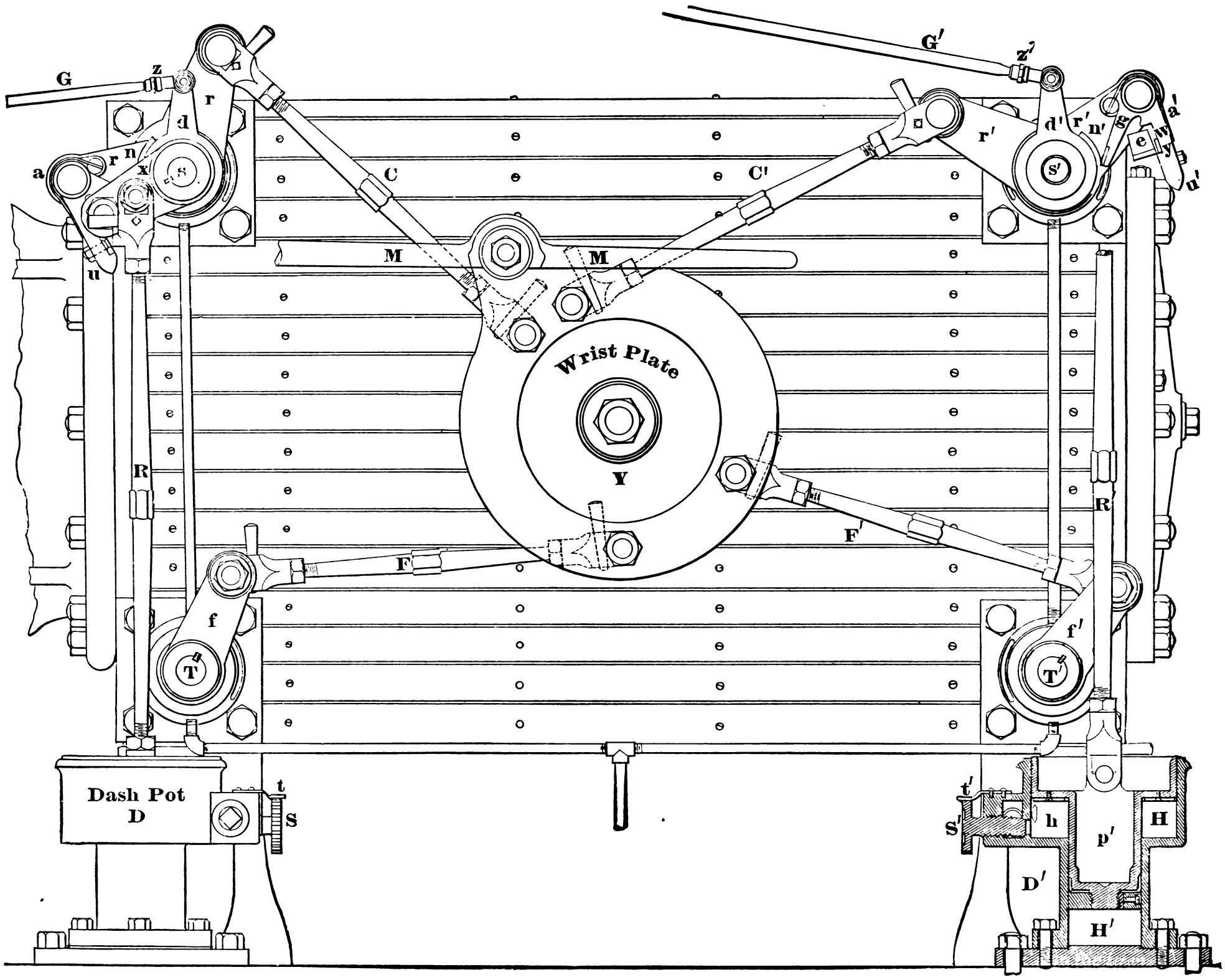

Fig. 3379.

The period of admission, therefore, is determined by the amount of motion the latch link u' is permitted to have before its end g meets the cam n', which trips the latch link, and therefore frees e from the latch link recess.

The point at which the cut off will occur, therefore, is determined by the position of the cam n', because if n' is out of the way, the end g of the latch link will not meet it, the latch link will not disengage from the latch block e, and the cut off would be effected by the lap of the valve, and independently of the dash pot. As in Fig. 3379 the parts are shown in the positions they oc-

g will meet the end of cam n' later, and the point of cut off will be prolonged.

We now come to the means employed to close the valve quickly and without shock when the latch block is released from the latch link. Referring then to the crank end of the cylinder, the latch block for that valve is carried upon arm x, to which is attached the rod R from the dash pot piston (the arm corresponding to x, but at the head end being shown removed to expose the latch block to view). We may now turn again to the head end of the cylinder, rod R' corresponding to rod R at the other end, and it is seen

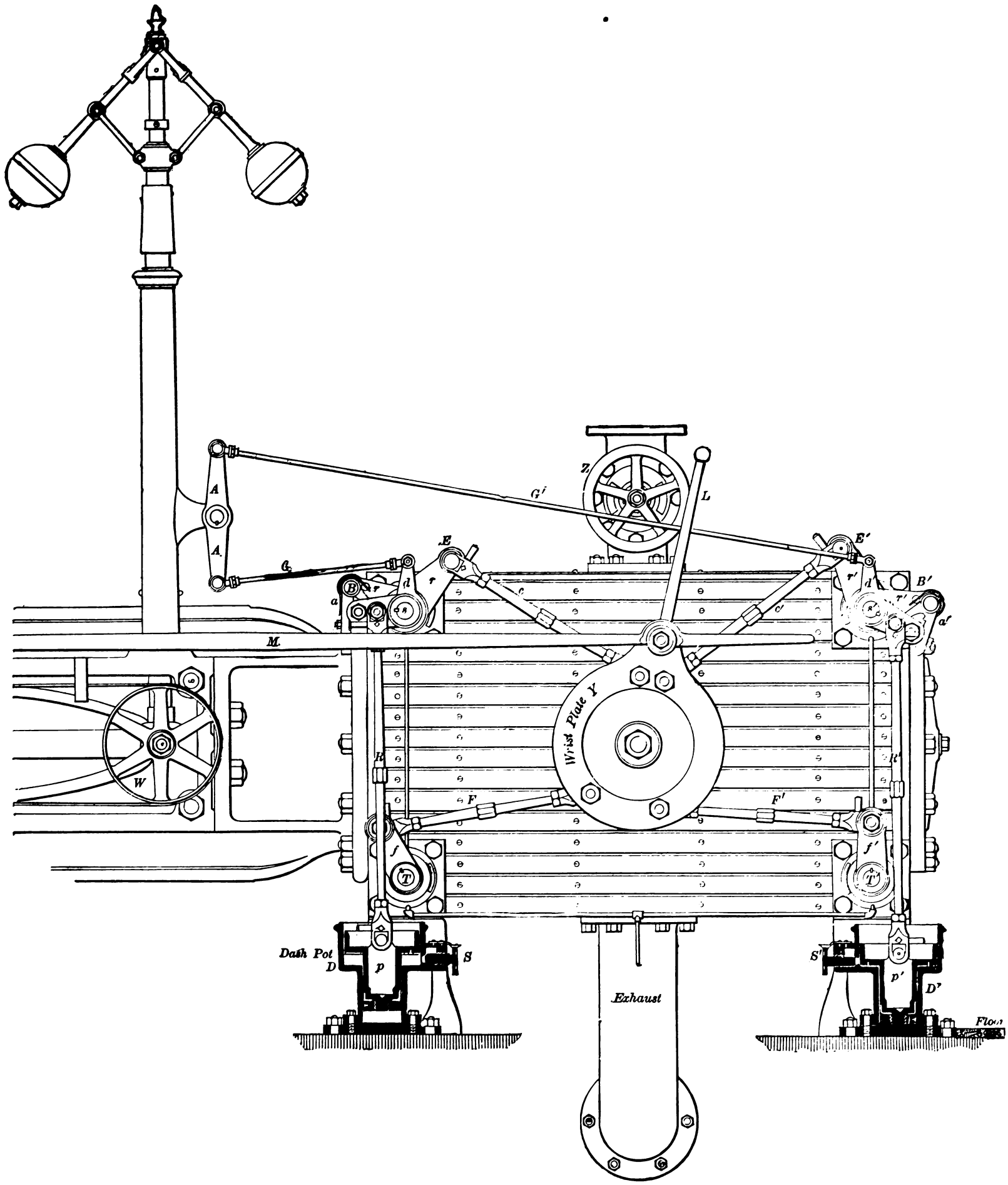
A
A
G
G'
Z
L
E
E'
B
B'
d
d'
r
r'
a
a'
c
c'
M
W
Wrist Plate Y
R
R'
F
F'
f
f'
T
T'
Dash Pot
D
p
S
S'
p'
D'
Exhaust

Fig. 3381.

that R connects to a dash pot piston *p'* having a stepped diameter, the lower half fitting into bore H', and the upper half fitting into a bore H. The piston *p'* fits the bore H' and fills it when the rod R' is at the bottom of the stroke, hence as *p'* is raised there is a vacuum in H that acts to cause *p'*, and therefore R' and *x*, to fall quickly and close the valve the instant the latch block is released from the latch link. To prevent the descent of rod R' and piston *p'* from ending in a blow, a cushion of air is given in H by the following construction:

At S and S' are valves, threaded to screw and unscrew, the ends forming a valve for a seat entering H.

As the rod R' and its piston *p'* descend, the air in H finds exit through a hole at *h* until that hole is closed by the piston *p'* covering it, after which the remaining air in H can only find exit through the opening left by the end of the valve S', and this amount of opening is so regulated by the adjustment of S' that a certain amount of air cushion is given, which prevents *p'* from coming to rest with a blow. The head of valve S' is milled or knurled, and a spring *t'* fits, at its end, into the milled indentation, thus holding it in its adjusted position. The under surface of the upper part of *p'* is covered by a leather disc, while the part that fits in H' is kept air-tight by a leather-cupped packing.

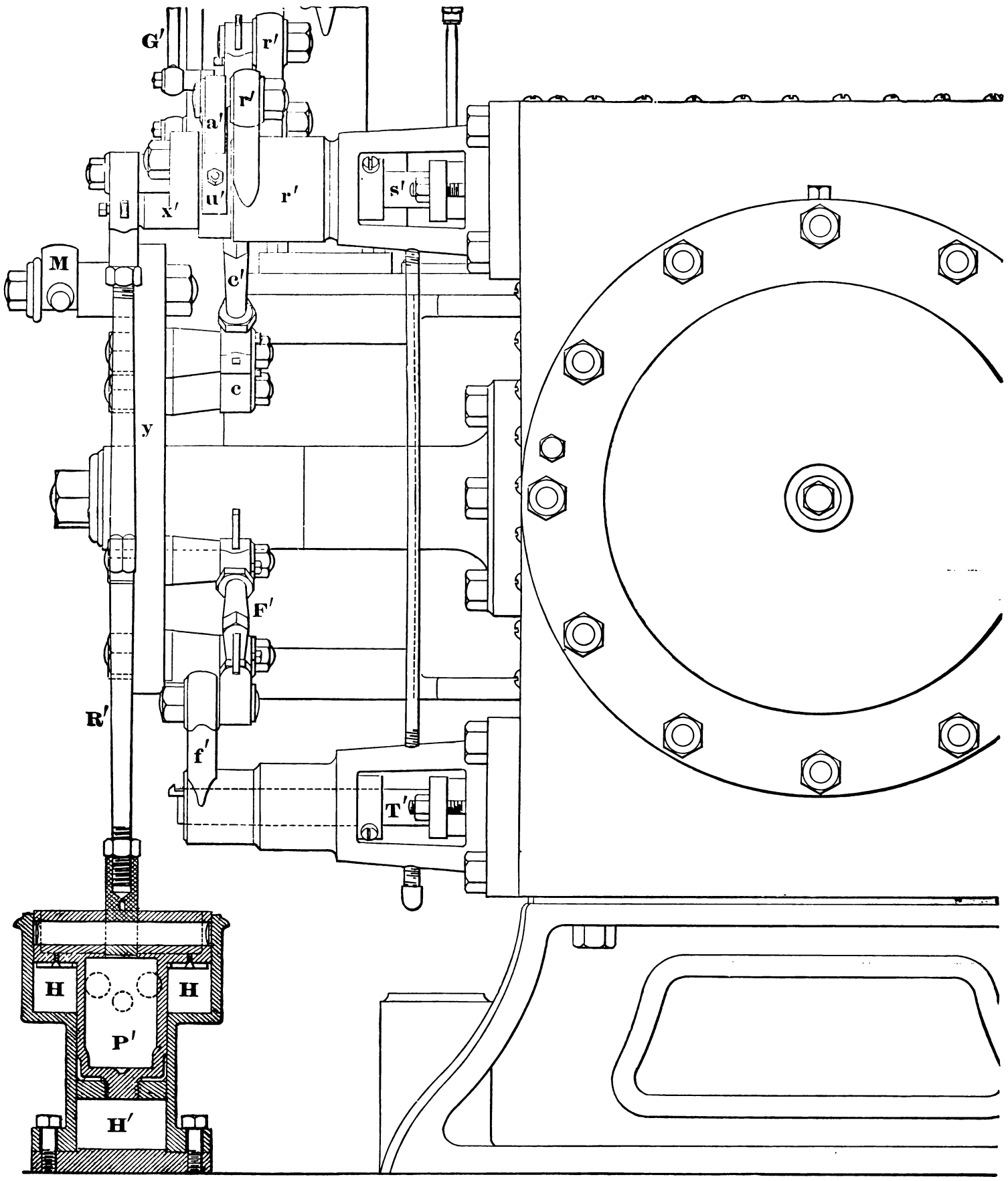

Fig. 3380.

The connection of the cam arms *d* and *d'* with the governor is shown in Figs. 3381 and 3382, in which the parts are shown in the position they would occupy when the crank is on the dead centre and the piston at the crank end of the cylinder. The rod G' con-

nects the cam arm d' with the upper end of lever A, which is connected to the governor and vibrates on its centre as the governor acts upon it.

Now suppose the speed to begin to diminish, and the governor balls to fall, and the direction in which A will move will be for its lower end to move to the right, thus moving d to the right and carrying its cam away from the end of the latch link, which will therefore continue to open the port for a longer period of admission. Or, referring to Fig. 3381, it is plain that, if the governor balls were to lower from a reduced governor speed, G' would move to the left and cam n' would be moved away from contact with the end g of the catch link, which, not being tripped, the admission would continue. On the other hand, suppose the governor balls to rise from an increase of governor speed, and d' (Fig. 3379) would haust valves are employed, the point of release, and (as the same valve edge that effects the release also effects the compression) therefore that of the compression, may be regulated at will by adjusting the lengths of the rods F, F', Fig. 3379, which have at one end a right and at the other a left hand screw, so that by turning back the check nuts and then revolving the rods their lengths will be altered.

Similarly the amount of admission lead may be adjusted by an adjustment of the lengths of rods C, C', which also have right and left hand screws. Referring now to the admission valve v, it is seen that its operating rod C is at a right angle to bell crank r, r, hence the amount of valve motion will not be diminished to any appreciable extent by reason of the wrist plate end of rod C moving in an arc of a circle, and the point of attachment of rod C to the wrist

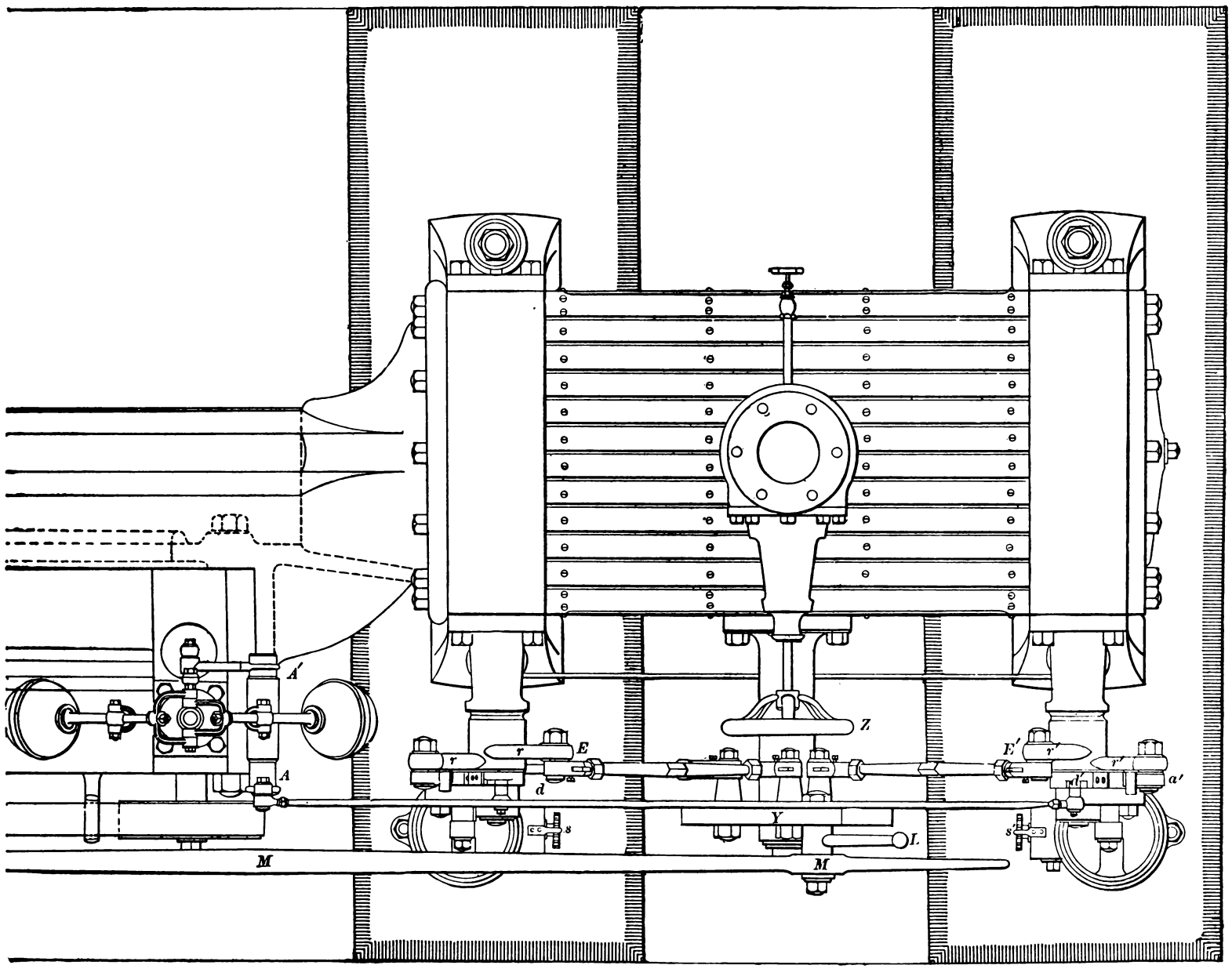

Fig. 3382.

be moved to the right, and the cam n' meeting g earlier, correspondingly hastening the cut off.

The governor is driven by a belt from a pulley on the crank shaft to the pulley W, Fig. 3381, whose shaft conveys motion to the governor spindle through the medium of a pair of bevel pinions in which v represents (referring again to Fig. 3378) the steam or admission valve for the crank end port, and v^1 that for the head end port, while v^2 is the exhaust valve for the crank end, and v^3 that for the head end of the cylinder. All four valves are shown in the positions they would occupy when the crank was on the dead centre and the piston at the crank end of the cylinder, hence the valve positions shown correspond to the positions the parts of the valve motion occupy in Fig. 3381.

The faces of the valves are obviously arcs of circles of which the axes of the shafts s, s' are the respective centres. Valve v has opened its port to the amount of the lead, which in this class of engine varies usually from $\frac{1}{32}$ to about $\frac{1}{16}$ inch. As separate ex- plate is such that, during the admission, the valve practically gives as quick an opening as though rod C continued at a right angle to r. But, if we turn to valve v', which has closed its port and covers it to the amount of the lap, we find that bell crank r' and its operating rod C' are in such positions with relation to the wrist plate, that the motion of the latter will have but little effect in moving the bell crank r'. This is an especial feature of the Corliss valve motion and is of importance for the following reasons :

The lap of the valve (which corresponds to the lap of a plain D slide valve) is usually, in this class of engine, such as to cut off the steam at about $\frac{7}{8}$ stroke, but the adjustment of the cam position is usually so made that, from the action of the governor, the latest point of cut off will occur when the piston has made $\frac{5}{8}$ of its stroke, the range of cut off being from this to an admission equal to the amount of the lead.

As the eccentric is fixed upon the shaft, the speed at which the valve opens the port for the admission is the same for all corr-

sponding piston positions. Thus suppose the piston has moved an inch from the end of the stroke, and the valve speed will be the same, whether the cut off in that stroke is to occur at quarter stroke or half stroke, and as the valve continues to open the port until it is tripped, therefore, at the moment it is tripped, the direction of valve motion must be suddenly reversed.

As the duty of its reversal falls upon the dash pot, it is desirable to make this duty as light as possible, which is accomplished by the wrist motion, which acts to reduce the valve motion after the port is opened a certain amount for the admission.

We have, therefore, that during the earlier part of the admission, the port opening is quick because of the eccentric throw being a maximum, while during the later part of the port opening, this rapid motion is offset or modified by the wrist motion, thus lessening the duty of the dash pot and enabling it to promptly close the valve.

jority of them vary the point of cut off, by means of shifting the eccentric across the shaft, so as to reduce the eccentric throw, and therefore the valve travel. This causes the valve to cut off the steam earlier.

The eccentric, instead of being fixed upon the crank shaft, has an elongated bore, and is hung on an arm that is pivoted at its other end after the manner of a pendulum. This arm is called the eccentric hanger.

A wheel governor is usually employed to shift the eccentric across the shaft. In some cases, however, two valves are employed, one effecting the admission, the release, and the compression, and the other the cut off.

When two valves are employed, the lead, the point of cut off, the point of release, and the point of compression may be maintained equal for all points of cut off; whereas, when a single valve is employed, the lead, the point of release, and the compres-

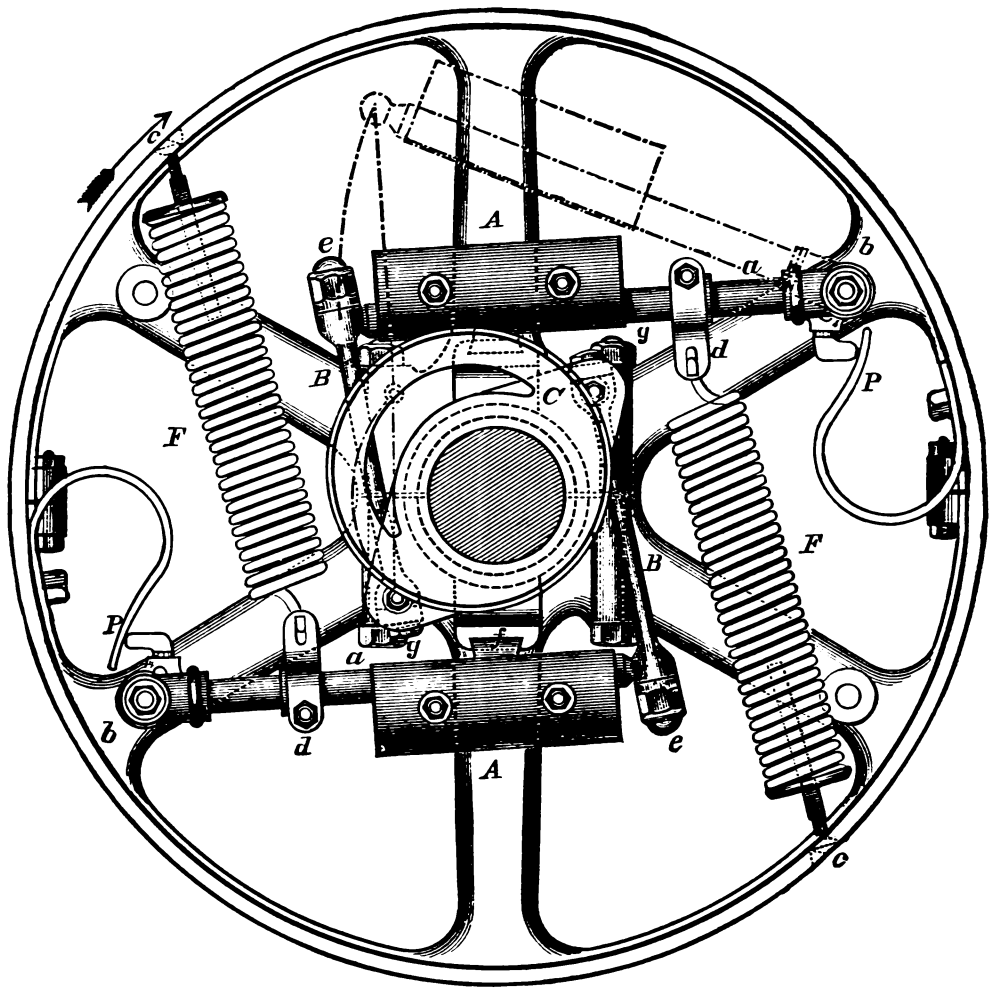

Fig. 3382*a*.

The range of governor action, so far as the governor itself is concerned, is obviously a constant amount, because a certain amount of rise and fall of the governor balls will move the cams a given amount. But the range of cut off may be varied as follows: At Z, Z', are adjustment nuts, by means of which the lengths of rods G, G' may be varied.

Lengthening rod G obviously moves arm *d* and its cam *n* further from the end of the latch link *u*, and therefore prolongs the admission period.

Shortening the rod G' causes cam *n'* to move around and away from the leg *g* of the latch link, and prolongs the admission.

The adjustment of the lengths of G and G' may therefore be employed for two purposes; first, to prolong the point of cut off, and maintain the speed when the engine is overloaded, or to hasten the point of cut off for a given engine speed, and thus adjust the engine for a lighter load.

HIGH SPEED AUTOMATIC CUT OFF ENGINES.

What are termed high speed engines are those whose pistons run at a velocity of more than about 600 feet per minute, some making as high as 800 or 900 feet in regular work. High speed engines are usually provided with an automatic cut off, and a ma-

sion will vary with the point of cut off, or, in other words, will be different for every different point of cut off.

The general principles upon which a wheel governor is constructed is, that two weights or weighted levers in moving outwards from the engine shaft, from the action of centrifugal force, move or rather shift the eccentric across the shaft, reducing its throw, and therefore by reducing the travel of the valve hasten the point of cut off and reduce the power of the engine.

In the governor of the Buckeye engine, the centrifugal force may be varied by increasing or diminishing the distance of the weights from the pivots of the arms on which they swing.

This is shown in Fig. 3382*a*, in which it is seen that the weights A are adjustable along the arms *a*, *a*. The points of attachment *d*, *d* of the springs to the weight arms are also adjustable.

When reversing is done, by shifting the eccentric across the shaft, the lead cannot be kept equal, but will, if the eccentric is swung from a pivot that is on the line of centres, when the crank is on a dead centre, be greater at the head end than at the crank end of the cylinder. The discrepancy may, however, be equalized by swinging the eccentric from a pivot that is not on the line of centres at a time the crank is on a dead centre.

But this equalization will only exist at some one point in the

eccentric position, or in other words, if the eccentric is shifted across the crank shaft, simply to reverse the engine, and not to vary the point of cut-off, it will naturally be moved, in reversing the engine across the shaft, to a given and constant amount, and in

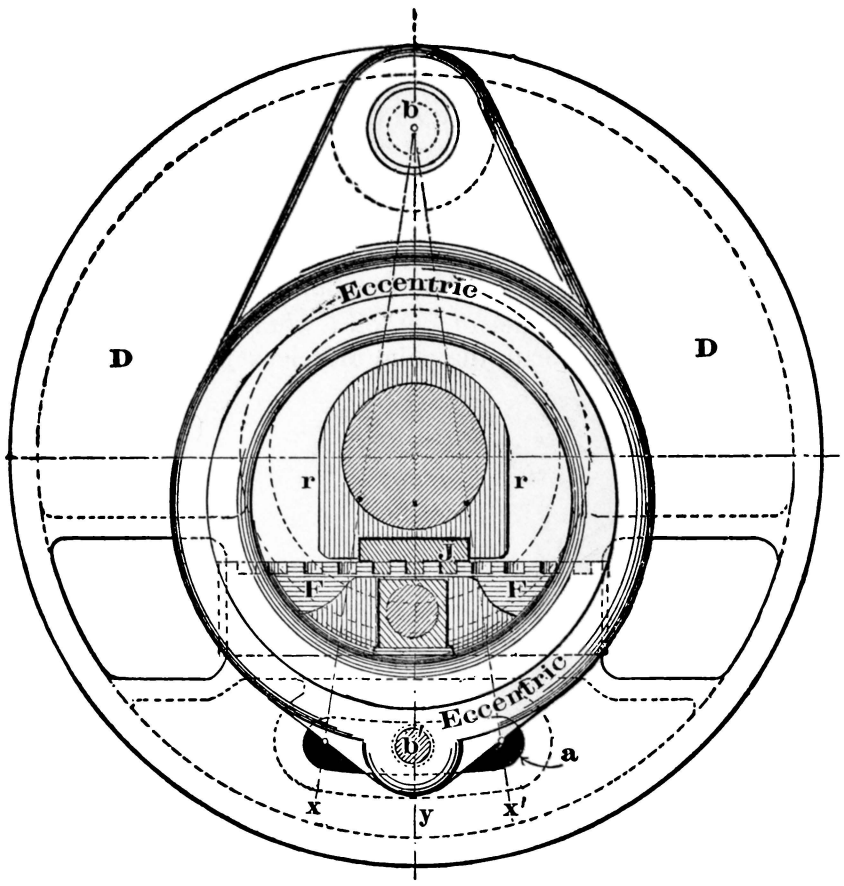

Fig. 3383.

this case, the pivot on which its hanger is hung may be so located with reference to the line of centres and the crank (the latter being on a dead centre when the point of suspension of the eccentric hanger is found) that the lead is equal for both the backward and forward gears.

But if the eccentric is shifted across the shaft to vary the point of cut off as well as to reverse the direction of engine revolution, the lead cannot be kept equal.

It is better, in this case, to so locate the point of eccentric hanger suspension as to let the lead be the most at the head end cylinder port, because the piston travels fastest at that end of the cylinder, and therefore requires more lead, in order to cushion the piston.

A construction for shifting the eccentric across the shaft is shown in Fig. 3383, in which D, D is a disc, having at *b* a pivot for the eccentric hanger. The amount the throw line of the eccentric must be shifted to reverse from full gear forwards to full gear backwards is from the line *b x* to line *b x'*, and the shifting is done by two racks F and J, having teeth at an angle of 45° to their lengths. F is fast to the eccentric, and J is carried in a sleeve that slides along the shaft, and sliding it moves the eccentric across the shaft by reason of the teeth of one rack being at a right angle to those of the other.

It is obvious that the eccentric may be moved around the shaft in place of across it, the distance its throw line requires to be moved being the same in either case.

To shift an eccentric so as to reverse the direction of engine revolution, all that is necessary is to place the crank on either dead centre and measure the amount of valve lead. Then loosen the eccentric from the crank shaft, and while the crank is stationary, move it around upon the shaft until it has opened the port full, and nearly closed it again, leaving it open to the same amount as it was before the eccentric was moved, or in other words, open to the amount of the lead.

Fig. 3384 represents a side elevation of a high speed wheel governor engine, designed and constructed by the Straight Line Engine Company of Syracuse, New York, the construction of the governor being shown in Fig. 3385, in which R is the eccentric rod, the eccentric being carried in a lever strap pivoted at A, and connected at B to two links C and D, the former of which connects to the spring E, and the latter to the weighted lever F. The centrifugal force generated by the weighted end of F endeavors to move the eccentric inwards, and thus reduce its throw, which reduces the valve travel and hastens the point of cut off.

On the other hand, the tension of the spring E acts to move the eccentric in the opposite direction, and maintain the full throw of the eccentric and maximum point of cut off. These two forces are so calculated in the design and proportion of the parts that under a maximum load the engine will run at its proper speed, while, if

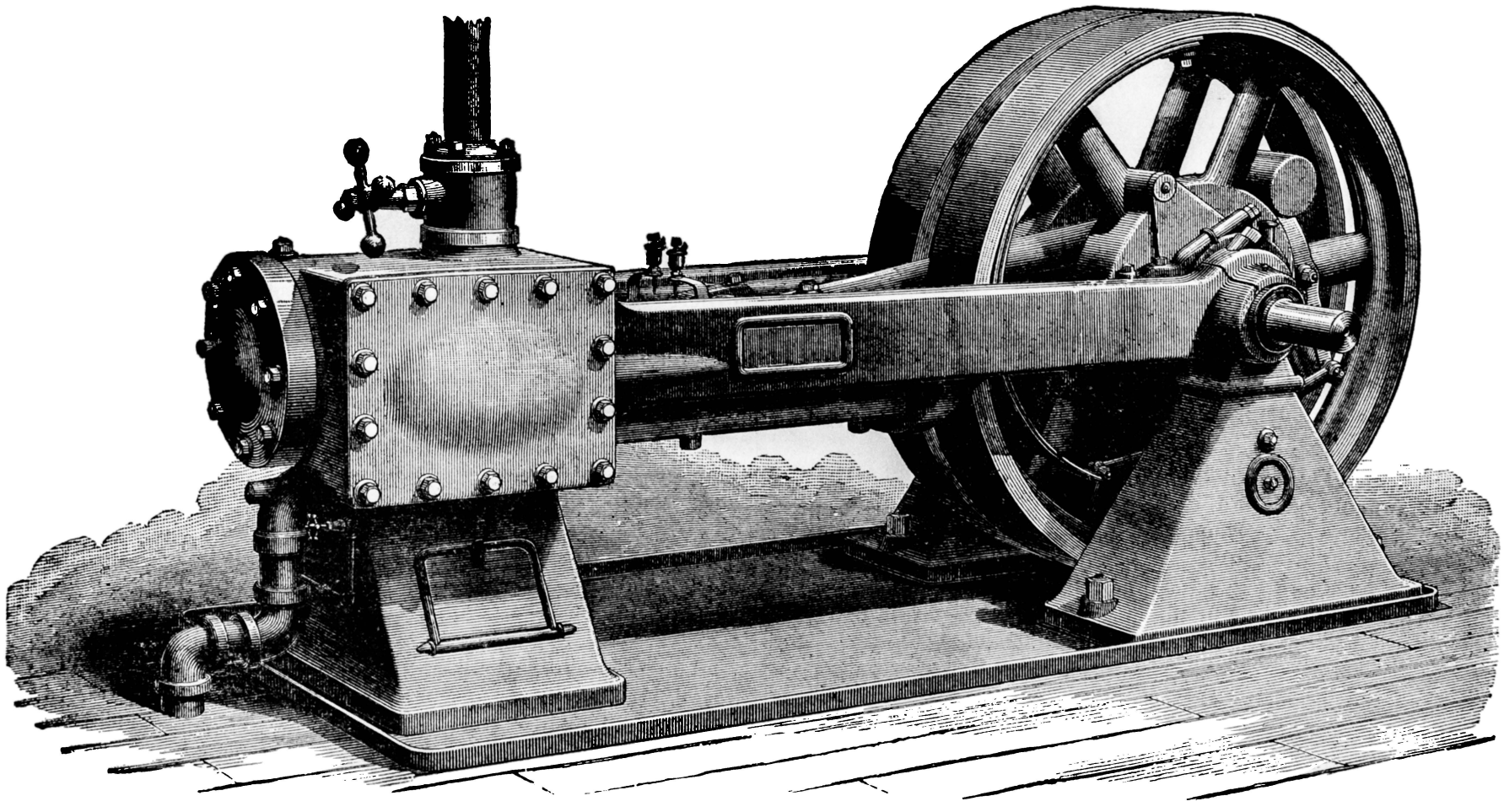

Fig. 3384.

the load decreases, the action of F will hasten the point of cut off enough to allow for the decreased engine load, and thus keep the engine still going at the same speed.

Other novel and interesting details in the construction of this engine are as follows:

The two arms forming the frame are cast with and run in straight lines from the cylinder to the two main bearings, and rest upon these self-adjusting points of support.

There are two fly wheels, both between the main bearings, and one of which carries the governor so that the centre of the valve is brought in line with the centre of the eccentric.

In order to simplify the explanation, the mechanism has been separated into three separate sections. Figs. 3386 and 3387 show such of the details of the parts between the cylinder and crank as are peculiar to this engine. The cross head is of the slipper guide style, and the illustration, Fig. 3386, shows the simple method adopted for adjusting the guide to the proper height to maintain the alignment. Another feature peculiar to the straight line not mentioned above, that of making the cross head pin fast in the connecting rod, is used in this engine also, but in a somewhat different form. As will be seen by Fig. 3387, the pin is made much larger, and this allows of its being made of "steel casting" and cast hollow with cross bars at each end for centring. These pins are held in the rod by a binding screw which catches in a groove that is milled around one-fourth of its circumference. After the pin is placed in the rod and the binding bolt is inserted, the pin is prevented from working out endwise, and the binding bolt prevents it from turning; but when the binding bolt is slackened, the pin can be rotated one-fourth of a revolution. The scheme is as follows: After running the engine for a while, the engineer is instructed to slack the binding bolt, give the pin a quarter turn and bind it fast. By repeating this, the pin can be kept more nearly round, probably, than by any other plan. By referring again to Fig. 3386, it will be seen that the plan for taking up the wear in the cross head pin bearings is simply that of setting up the common half box, and the endurance of the arrangement, with the hardened and ground steel pin

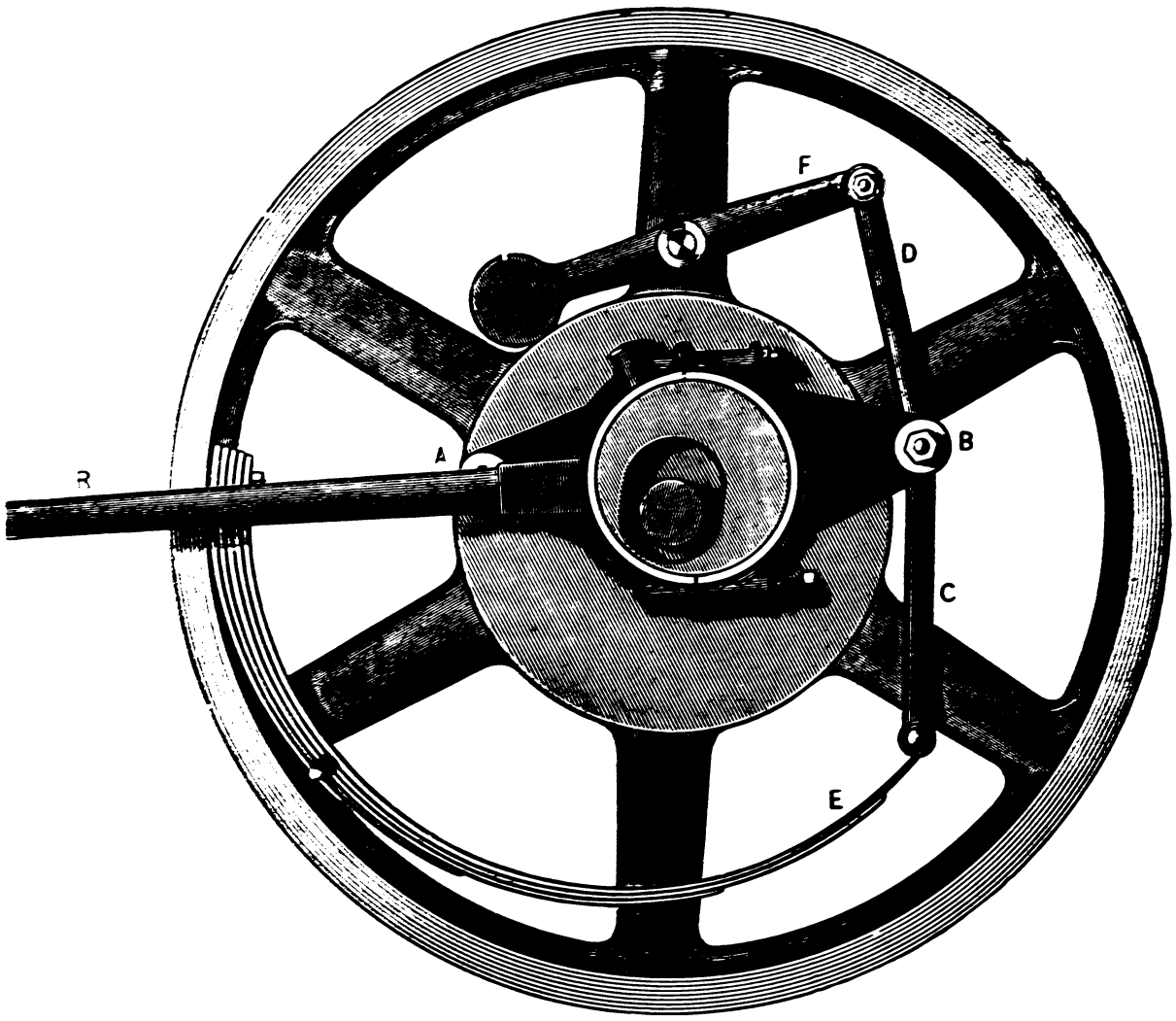

Fig. 3385.

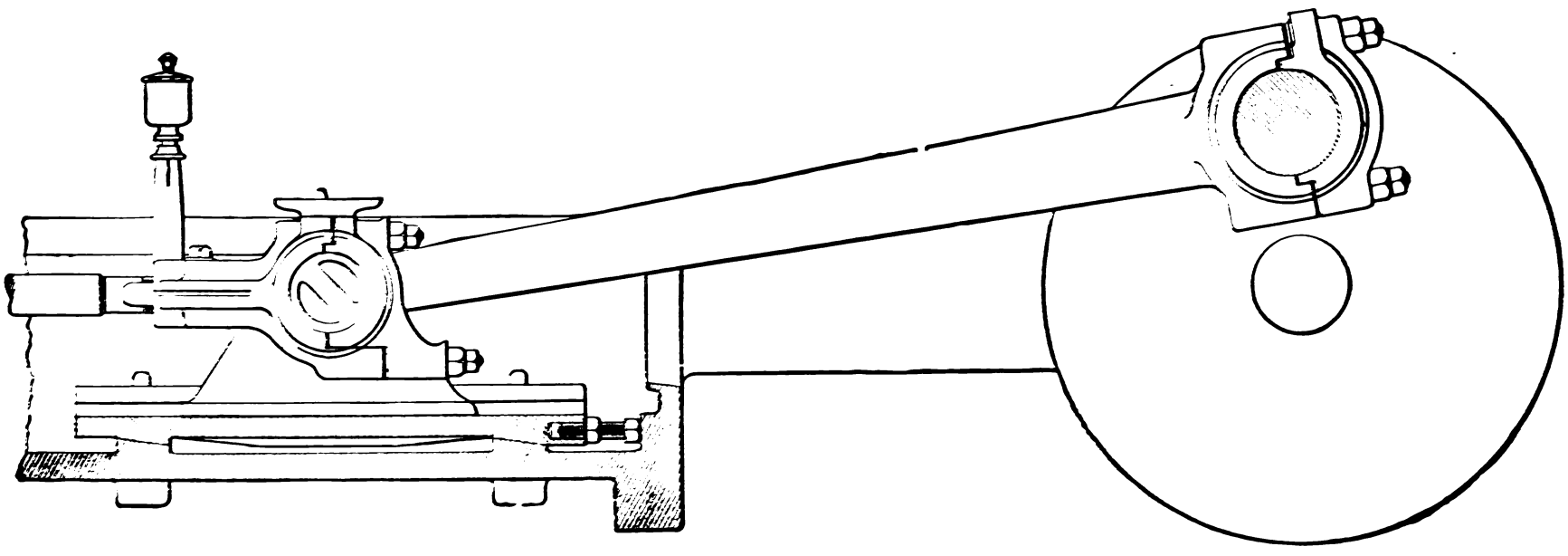

Fig. 3386.

running in babbitt lined boxes of double the ordinary size and length, must be satisfactory.

The drop oil cups for lubricating the cross head pin are located

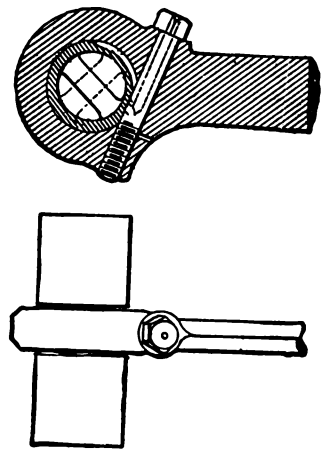

Fig. 3387.

so as to have the drop "picked" off just as the cross head completes its stroke at the cylinder end, and while it is travelling at its slowest speed. The oil, as it leaves the wearing surfaces of the pin, is conveyed to the lower slide.

Figs. 3388 and 3389 show the parts that connect the eccentric with the valve. The method of connecting the rod to the eccentric strap is convenient. The lower joint in the eccentric strap is set up tight, metal to metal, and the upper joint left open ⅛ of an inch.

STEAM FIRE ENGINE.

In a steam fire engine the prime requisites are rapidity of getting up steam and efficiency with lightness, economy of fuel being a secondary consideration.

The lower tube sheet C″ is perforated by all the tubes; the heavy lines showing the coil tubes in fire box, the others are smoke tubes. The upper tube sheet *d* has holes only for the smoke tubes. The smoke or draught tubes are shown at *e*,″ *e*,″ *e*″; these also answer the important purposes of drying and superheating the steam.

F″, F″, F″ are the sectional coil tubes, the main feature of this boiler. They are in the form of a spiral coil, the spiral bend being enough to leave room for five others of the same size between, so that there are six of these coils in each circular row. The number of rows is determined by the size of the boiler and the amount of steam required.

Each coil is connected with the lower tube sheet by screw joints, all right hand, that require no fibrous or elastic packing, an angle elbow being used to get the short bend at the end. The tubes then make about one turn around the fire box, and are joined to the side sheet of the same, with the same union used at its upper end, which makes a joint that never gets loose from any kind of work it may be subjected to. These unions or couplings are made of different kinds of metal, and put together so that no two pieces of iron come in contact to corrode and stick together; and should it, from any cause whatever, become necessary to take these coils out, it can be done, and the same tubes replaced without destroying any part of them, or damaging any piece so that it could not be used again.

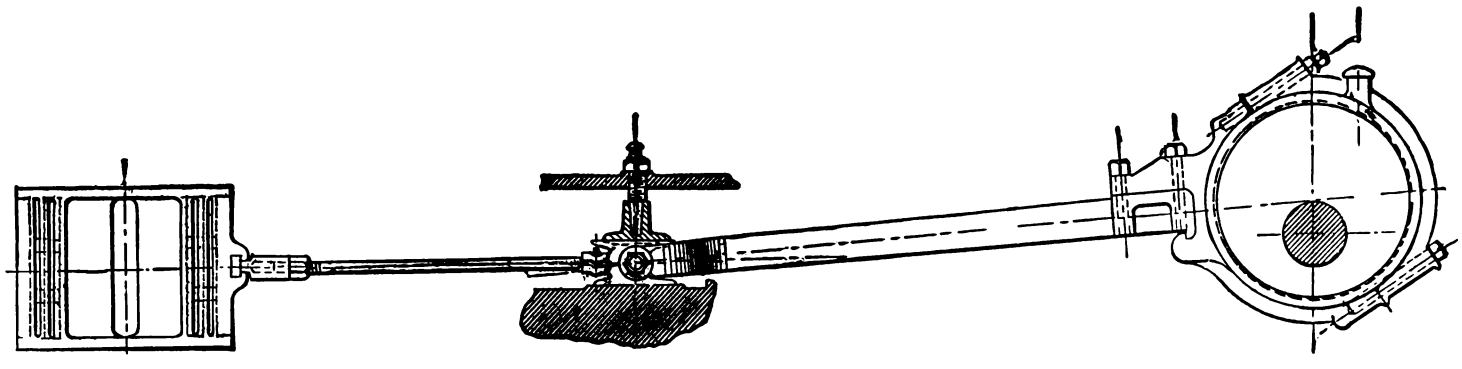

Fig. 3388.

G″, G″ is the ornamental dome or covering for the upper end; *g*″, *g*″ is the smoke bonnet and pipes for concentrating the hot escaping products of combustion for the purpose of making a draught of air through the fuel. H″ are grate bars, and I″ fire door. J″, J″ is the water line. The height has been determined by experiment, yet should be varied a little to get the best drying effect of the coal. A coal that makes a flame would call for a higher range of the water line, while coal that produces heat without the flame would call for a lower range; this the engineer will soon find. The working of the boiler is as follows: The fire being started in the fire box, as soon as the water in the coils begins to heat circulation commences from natural causes (nor is it at any time necessary to use a hand pump or any other artificial means for keeping it up), the heated water passing up in the steam drum, and the colder water from the leg and drum taking its place, as is shown by the arrows in the leg, till the whole is heated to the steam making temperature. At this point steam pressure begins to show, which goes up very fast, as the water is all so near the steam temperature. Of course, it is better to carry the water at about the height shown, as a uniform pressure of steam is easier maintained, which is always desirable; yet the limit of safety is not reached till the water is nearly all out, or so long as it is not below the connection

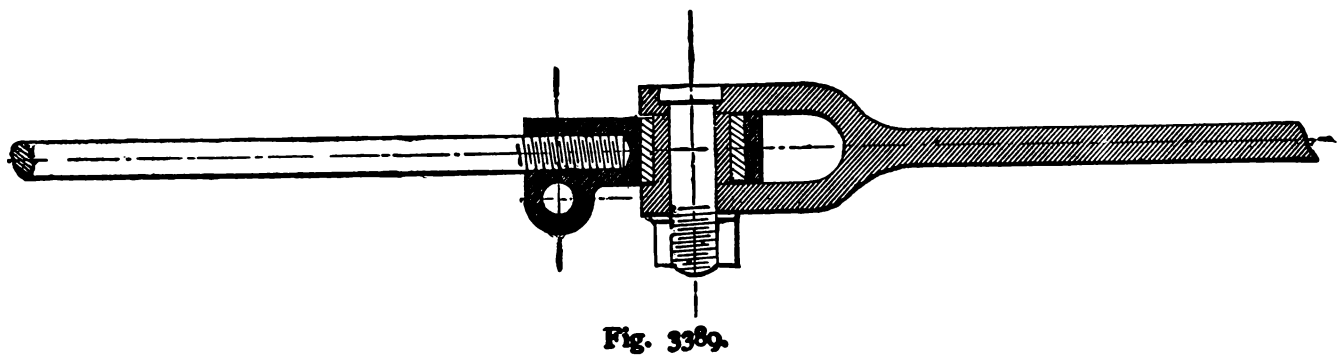

Fig. 3389.

Fig. 3390 is a general view of a steam fire engine constructed by the Clapp & Jones Manufacturing Company.

Fig. 3390*a* is a longitudinal section through the boiler and one steam cylinder and pump.

The construction of the boiler is shown in Figs. 3390*a* and 3391, the former being a vertical section of the engine and boiler bearing the steam pipe and exhaust pipe shown in place, and one of the draught tubes shown in section, and the latter a vertical central section.

The outside shell is represented at *a*″, *a*″. This shell extends the whole length of the boiler. The fire box sheet *b*″, *b* is less in length, extending only to the lower tube sheet.

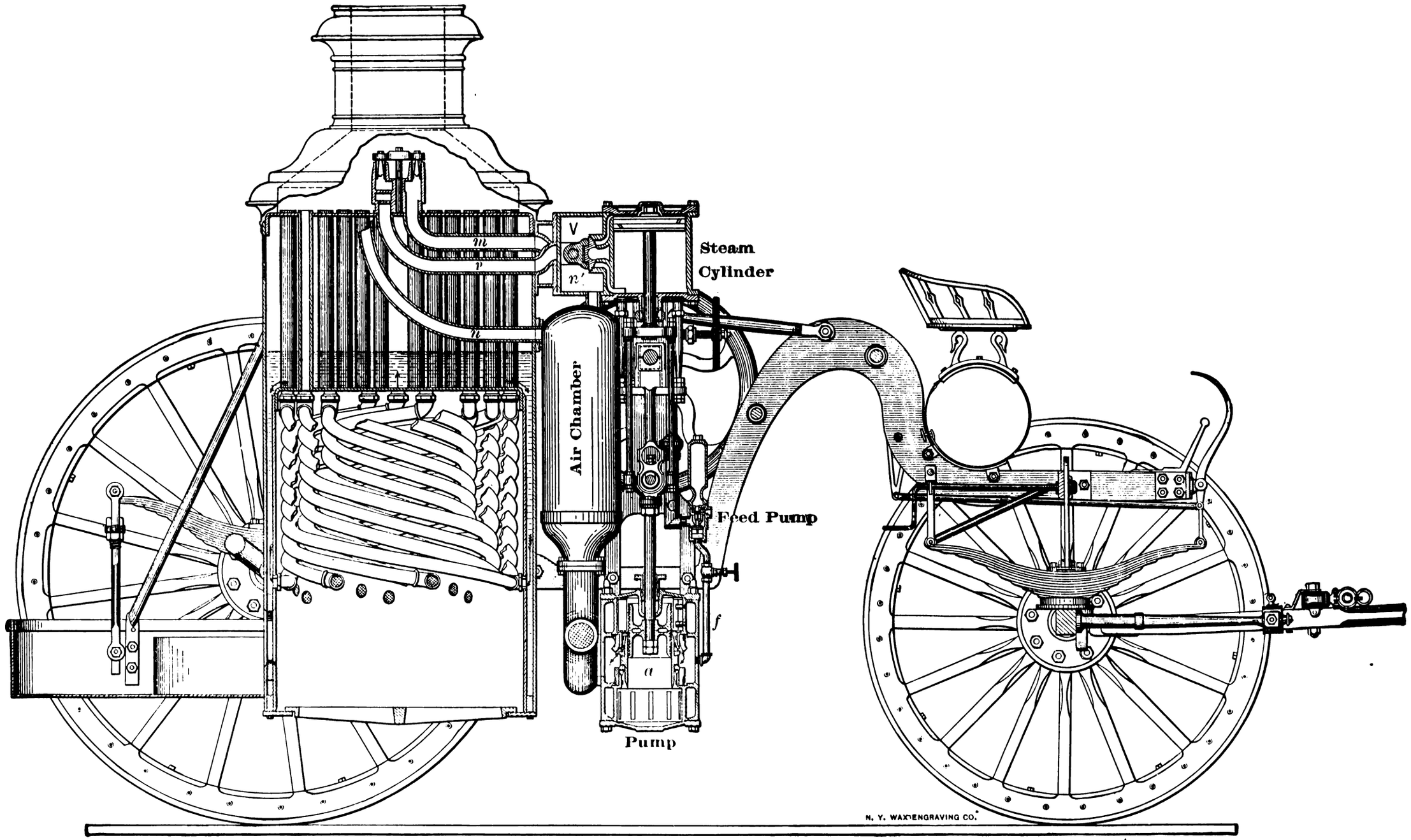
V
m
p
n'
n
Steam
Cylinder
Air Chamber
Feed Pump
f
a
Pump
N. Y. WAX ENGRAVING CO.

Fig. 3390a

of the coils in the leg; and even at this point the only danger is in the damage to the coils from the heat when there is no water to protect them.

In Fig. 3391*a*, one engine and pump is shown in side elevation, and the other in section, the cranks being at a right angle, one to the other. A yoke from the piston rod spans the crank, so that the steam and pump pistons are in line and directly connected. From the lower end of this yoke, a rod connects to the crank shaft upon which are the two fly wheels and the eccentrics for the steam valves.

It will be seen in the longitudinal section, Fig. 3390*a*, that the steam valve face is a segment of a circle and therefore answers, so far as the distribution of the steam is concerned, to a simple D slide valve, which exhausts through the pipes *m*, *p*. The steam pipe *n* enters the bottom of the steam chest at *n'*.

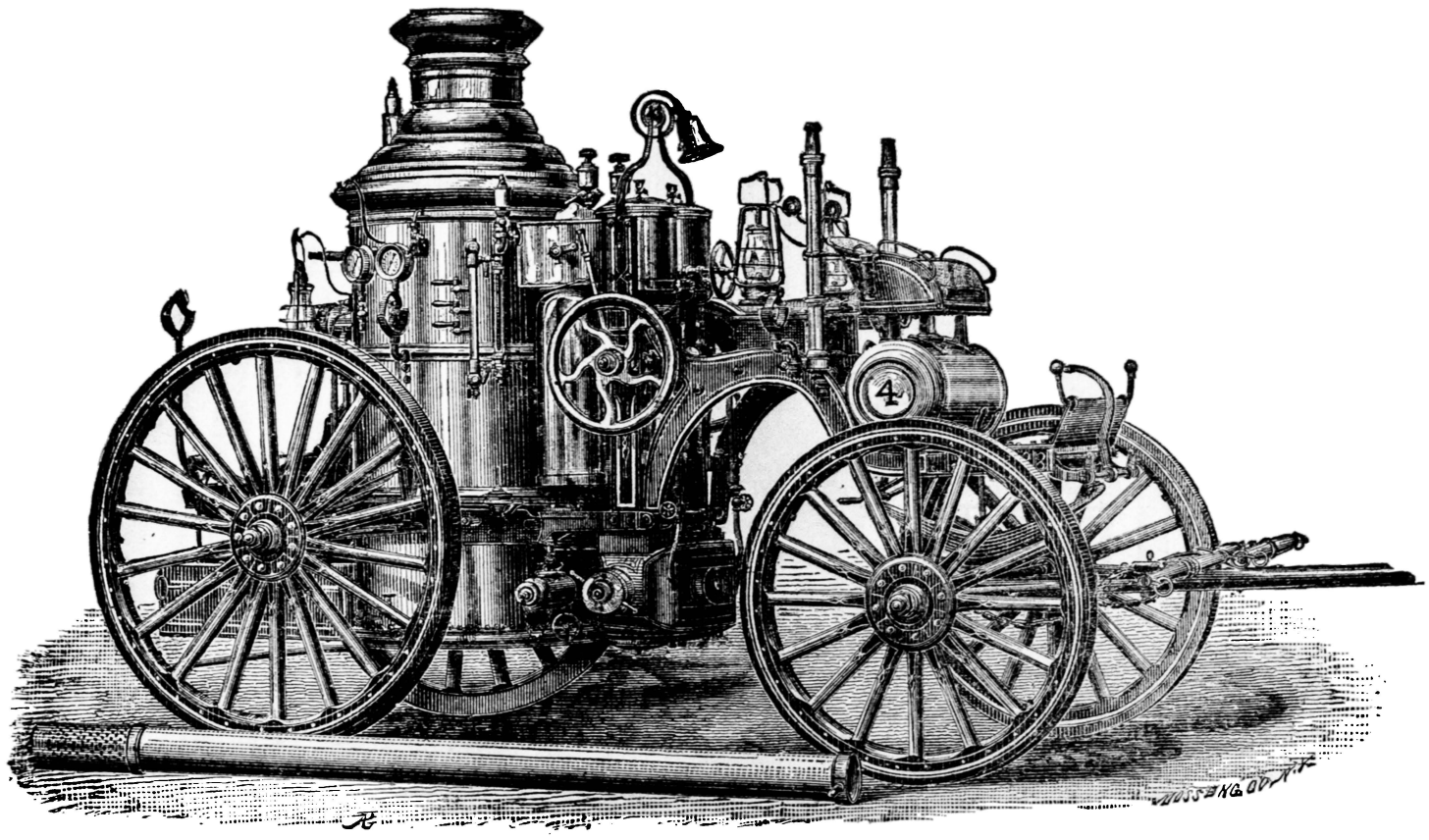

Fig. 3390.

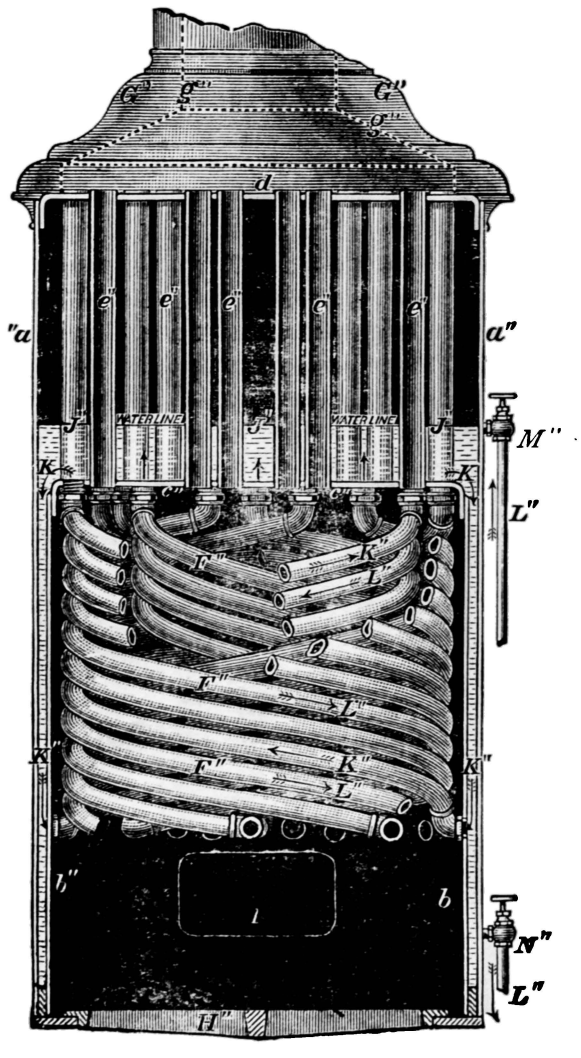

Fig. 3391.

The two main pumps *a* are made in one piece, entirely of composition; one of them is shown in section. The piston is a solid piece of brass, as well as the cylinder in which it works, but are made of different composition, one hard, the other soft, to prevent cutting. The valves are of India rubber; the discharge valve is a ring, one for each end of the pump, as shown at *b*, Fig. 3391*a*. One is shown open, while the other is closed. They are held in place by grooved rings of brass; these rings fit in grooves in the rubber, which, when they are put in the pump, and their set screws are in, with their points in the grooves in the brass rings spoken of above, the discharge valves are complete for work.

The suction valves are shown at K on Fig. 3391*a*, and will be easily understood. They are of a design for this special use and place, which is around the pump cylinder in a circular chamber. The water ways covered by these valves are long and narrow, one valve covering two of these openings, they being held in place by two studs that go through the centre part of the valve, a wire going through these studs, and close to the back of the valve which keeps it up to the seat, the only spring to either of these valves being the elasticity of the rubber. The opening and connection D, D is the inlet to the pump, and where the suction hose goes on, there being a pipe or chamber with branches for the two air chambers, and at each end is a discharge gate and a connection for the leading hose. The part *d* is the feed pump for the boiler supply, *e* is the air chamber on the pipe that leads to the boiler to ease off the shocks caused by the plunger striking the water, when the pump does not fill. It is drawn broken off to show the upper part of the pump barrel and stuffing box. The pipe *f* is the feed water pipe from the pump to boiler, shown from different points in Figs. 3390*a* and 3391*a*. *g* is what we call the suction pipe to the feed pump. It connects to the main pump in the discharge part of it.

A piece of hose pipe connects to the boiler at a point just above the water line, so that hot water or steam (according to the height of the water in the boiler) may be applied to any part that may have become frozen.

Heaters are almost universally used in connection with steam fire engines to keep the water hot, and in many cases to keep a few pounds pressure to shorten the time of going to work should the fire be close at hand. This boiler has an advantage for this kind of heating; the circulation is so perfect and free that all the water in it is heated alike; so when the fire is lighted the steam starts

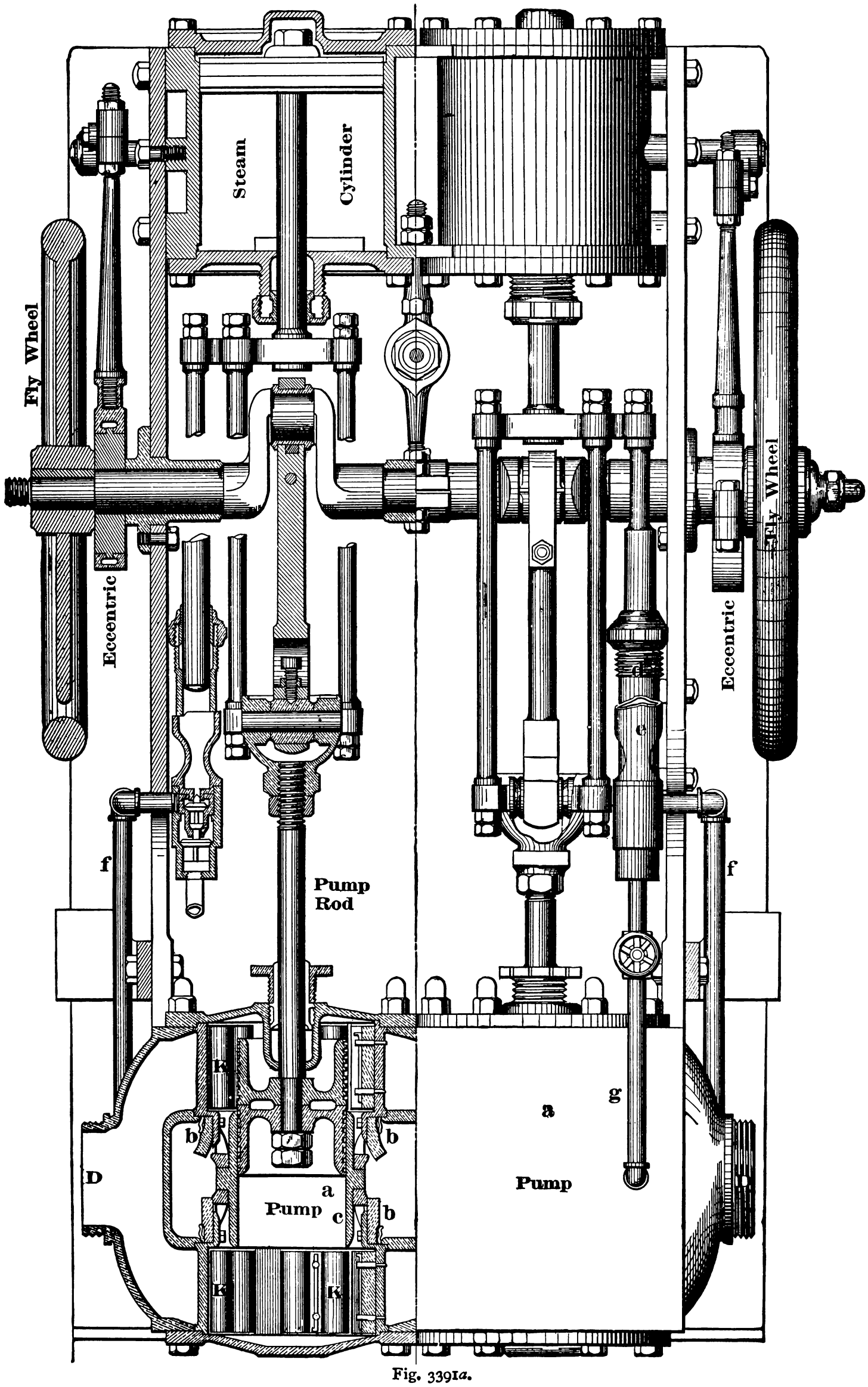

Fig. 3391*a*.

immediately up, instead of having to wait till some cold water has been heated that had not been reached by the very limited circulation in them, there being some parts that the circulation produced by the heater does not reach, leaving, of course, this water cold.

The arrows K″ (Fig. 3391), show the direction of the circulation when working with fire in the fire box; those marked L″ show the direction of it when on the heater which is directly opposite.

The outside pipe connected at about the water line is the outlet from the heater, and the inlet to the boiler, which carries the heated water over the crown sheet, where, as it gets cooler, it enters the coils, descends into the leg, and from there to the pipe near the bottom of the boiler; this pipe leads to the heater, so that the water is kept moving just in proportion to the heat given it; any kind of a heater can be used with the same result.

CHAPTER XL.—MARINE ENGINES.

MARINE engines are made in the following forms:

1. With a single or with two cylinders receiving live steam from the boilers, and exhausting into the atmosphere. These are termed high pressure engines, let the steam pressure be what it may. They are also, and more properly, termed non-condensing engines.

In the small sizes, such as are used for launch engines, it is simply a non-condensing engine, with a link motion for varying the point of cut off as well as for reversing purposes. Fig. 3392 represents an engine of this class constructed by Chas. P. Willard & Co.

The cylinder is what is called "inverted," meaning that it is above the crank shaft.

The slide spindle or valve rod passes through a guide and connects direct to the link block or die, as it is sometimes called.

The thrust block is provided in the bearing of the crank shaft, and consists, as seen in the sectional view, of a series of collars on the crank shaft bearing.

2. The addition to each high pressure cylinder of a low pressure cylinder constitutes a compound engine, and if the engine has also a condenser, it is a compound condensing engine, an example being shown in Fig. 3392*a*, which represents an engine in which the link motions are employed to vary the points of cut off of both cylinders, as well as to reverse the engine. The engine being small, the power required to move the links is small enough to permit of their operation by hand, by means of the hand lever L, which is secured to its adjusted position on the sector T by the small lever nut shown on the side of the lever. The lever L operates a shaft D which shifts both link motions. The air and circulating pumps are at the back of the condenser, being operated from the beams B, B, each beam connecting to rods J which connect to rod *c*, which drives the air and circulating pumps.

The steam from the high pressure cylinder exhausts into a receiver or chamber between the two cylinders, and from which the low pressure cylinder receives its steam.

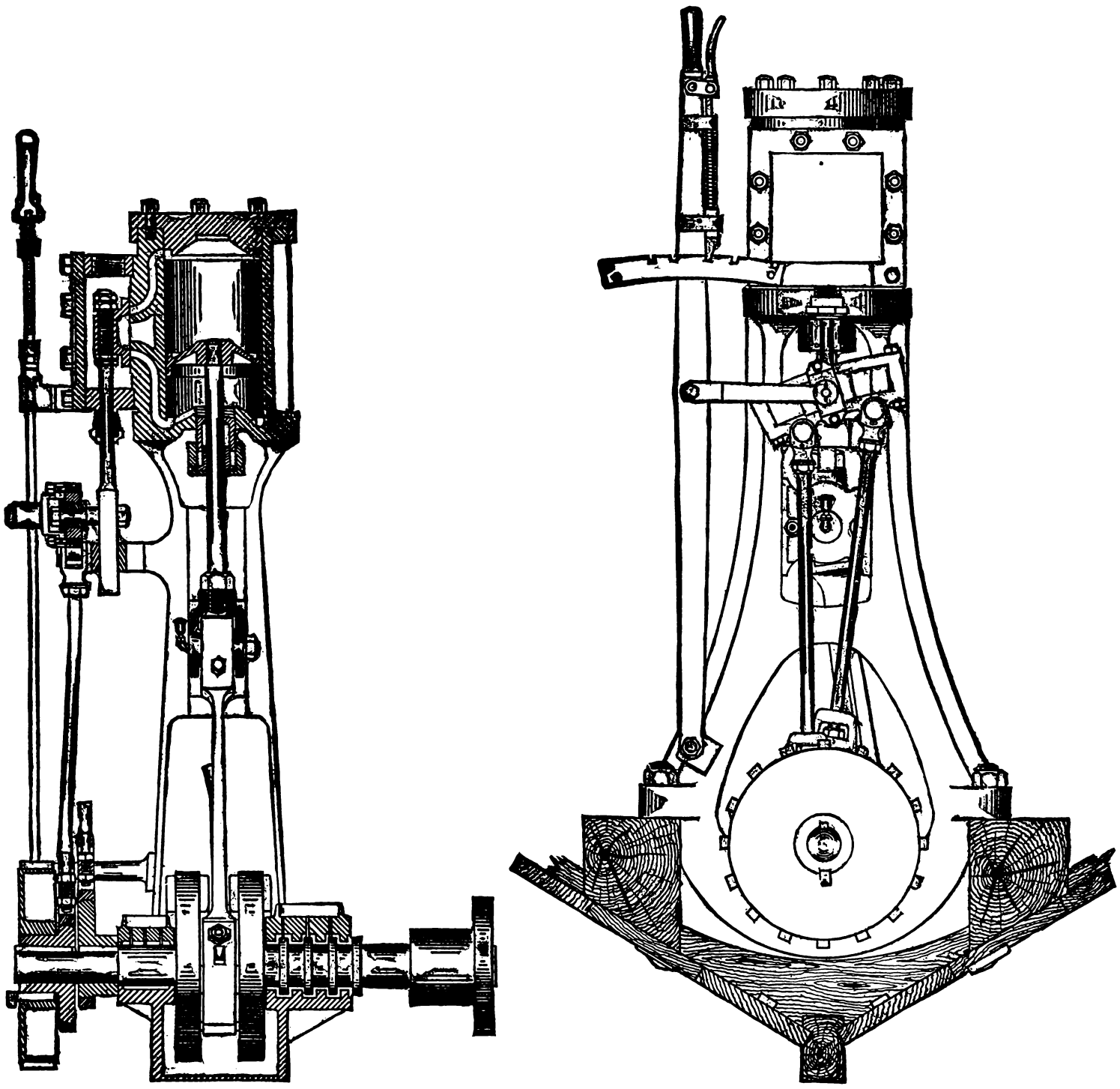

Fig. 3392.

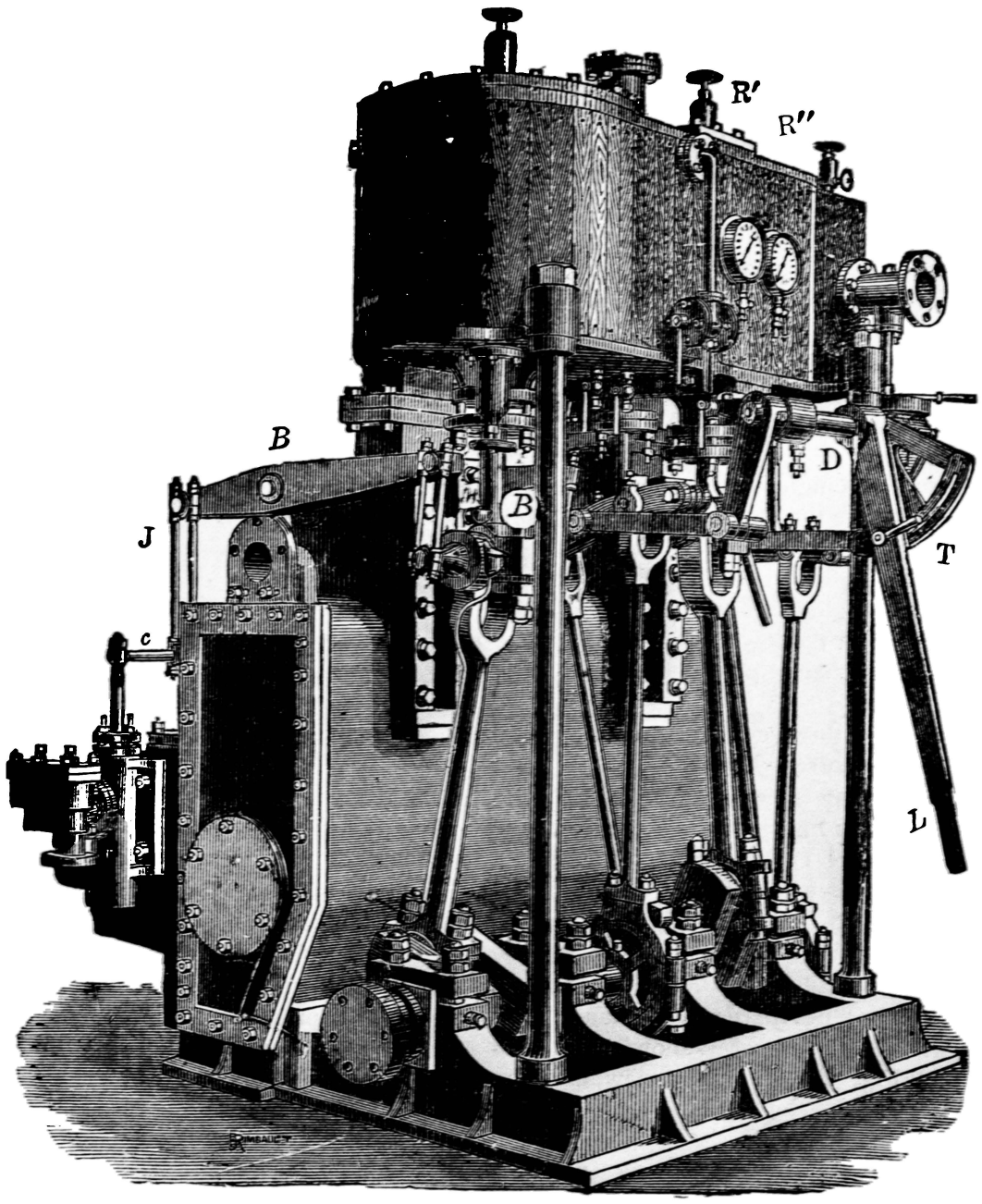

Fig. 3392a.

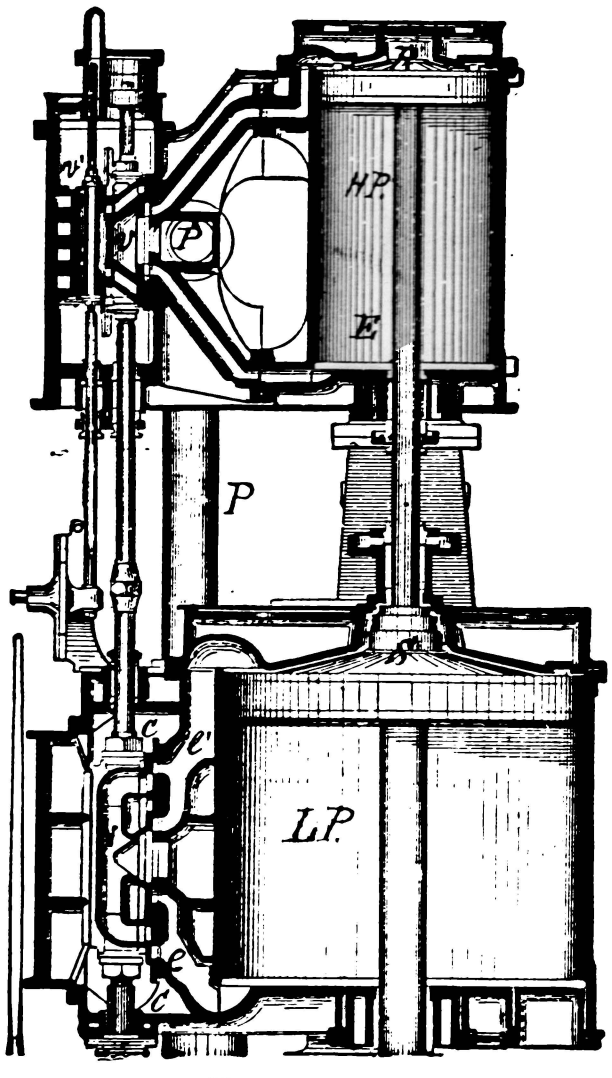

Fig. 3395

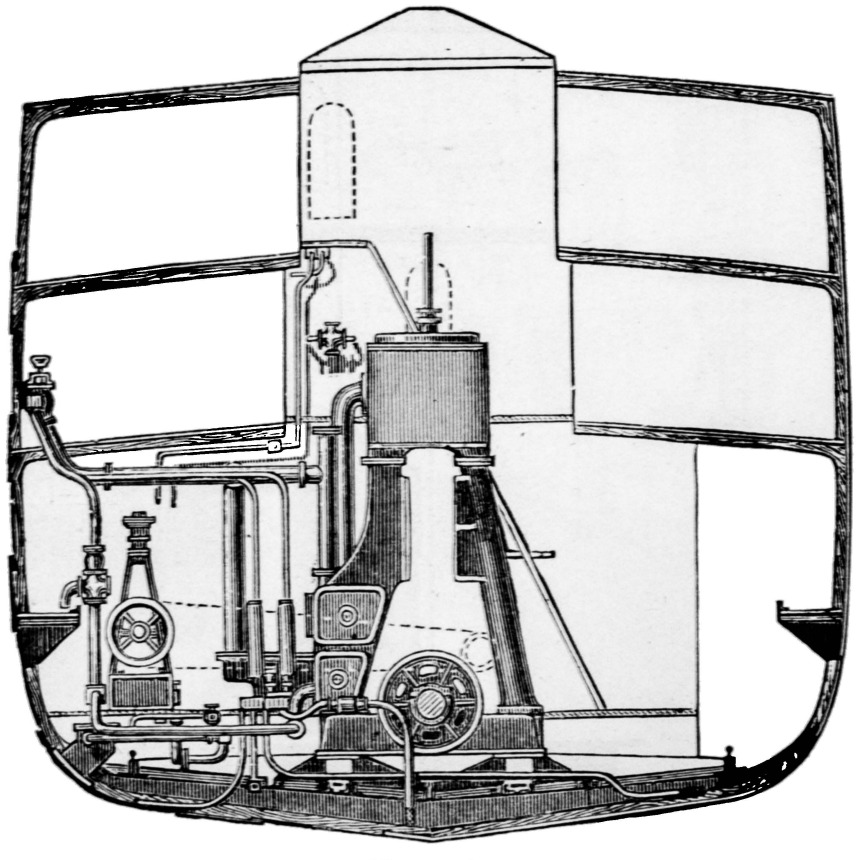

Fig. 3396.

The exhaust from the low pressure cylinder passes into the condenser, where it is condensed, leaving a partial vacuum on the exhaust side of the low pressure piston.

Figs. 3393 and 3394 show the arrangement of the pumps on a pair of compound engines for a dredger. The steam from the low pressure cylinder passes into the body of the condenser with which the air pump is in communication, as shown in the end elevation. At *a* is the foot valve of the condenser. The piston of the air pump has a similar valve, and at *e* is the delivery valve.

The circulating pump is shown in the back elevation (Fig. 3394), being a piston pump which forces the water through the tubes of the condenser.

There are two principal methods of compounding, in one of which the two cylinders are placed one above the other, with their axes in line, and both pistons connecting to the same crank, while in the other the cylinders are side by side, and each connects to its own crank, the two cranks usually being at a right angle.

When one cylinder is placed above the other, as in Fig. 3395, R being the high pressure and S the low pressure piston, no receiver is employed, the steam passing direct from the high pressure cylinder through the pipe P to the low pressure steam chest *c*. The high pressure steam valve V and the low pressure valve V are on the same stem, a cut off valve V′ being provided for the high pressure cylinder.

3. Triple expansion engines have three cylinders, a high pressure, an intermediate, and a low pressure cylinder.

In a triple expansion engine the intermediate cylinder receives the steam that is exhausted from the high pressure cylinder, and expands it further. The low pressure cylinder receives its steam from the exhaust of the intermediate cylinder, and exhausts into the condenser.

In the illustrations from Fig. 3396 to Fig. 3406 are represented the triple expansion engines of the steamship *Matabele*, constructed by Messrs. Hall, Russell & Company, of Aberdeen, Scotland. Fig. 3396 is a cross sectional view of the vessel showing the engine and its connections, and Fig. 3397 a similar view, showing

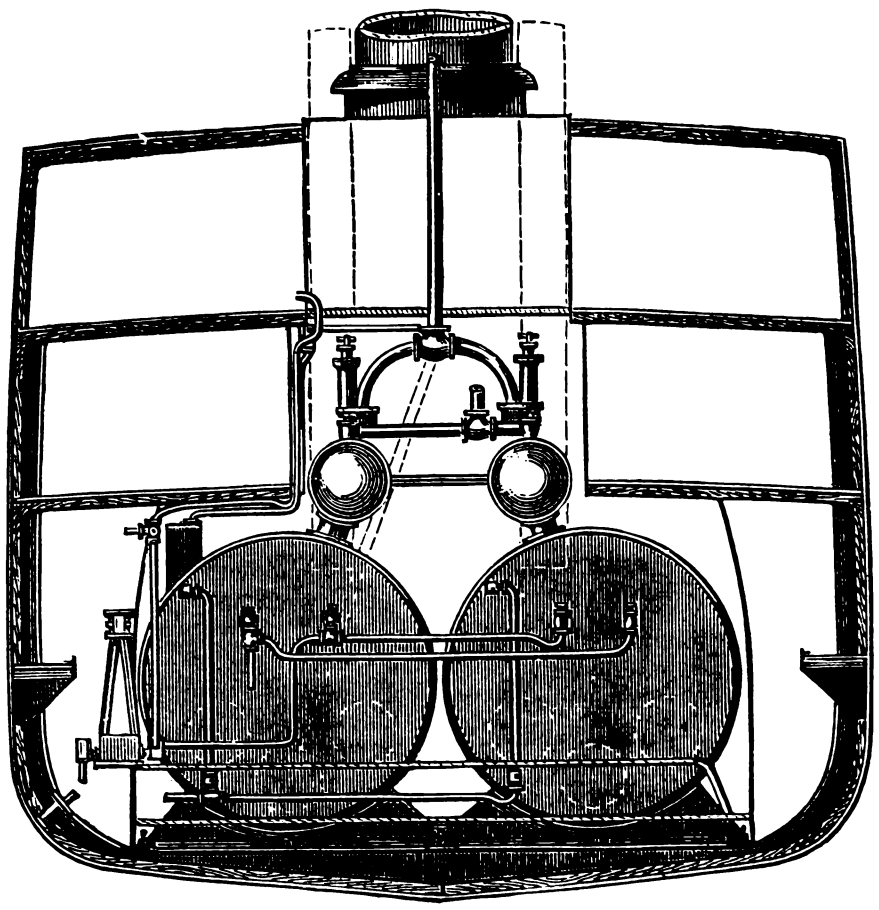

Fig. 3397.

the boilers. Fig. 3398 is a back elevation of the engine, showing the boilers also, and Fig. 3399 a plan of the same. Fig. 3400 is a sectional view, and Fig. 3401 an end view of the boilers. Fig. 3402 is a plan, Fig. 3403 an end elevation, and Fig. 3404 a front elevation, partly in section, of the engines. H P is the high pressure cylinder, I C the intermediate cylinder, and L P the low pressure cylinder. The high pressure cylinder has a piston valve, the steam chest being shown at A. The intermediate

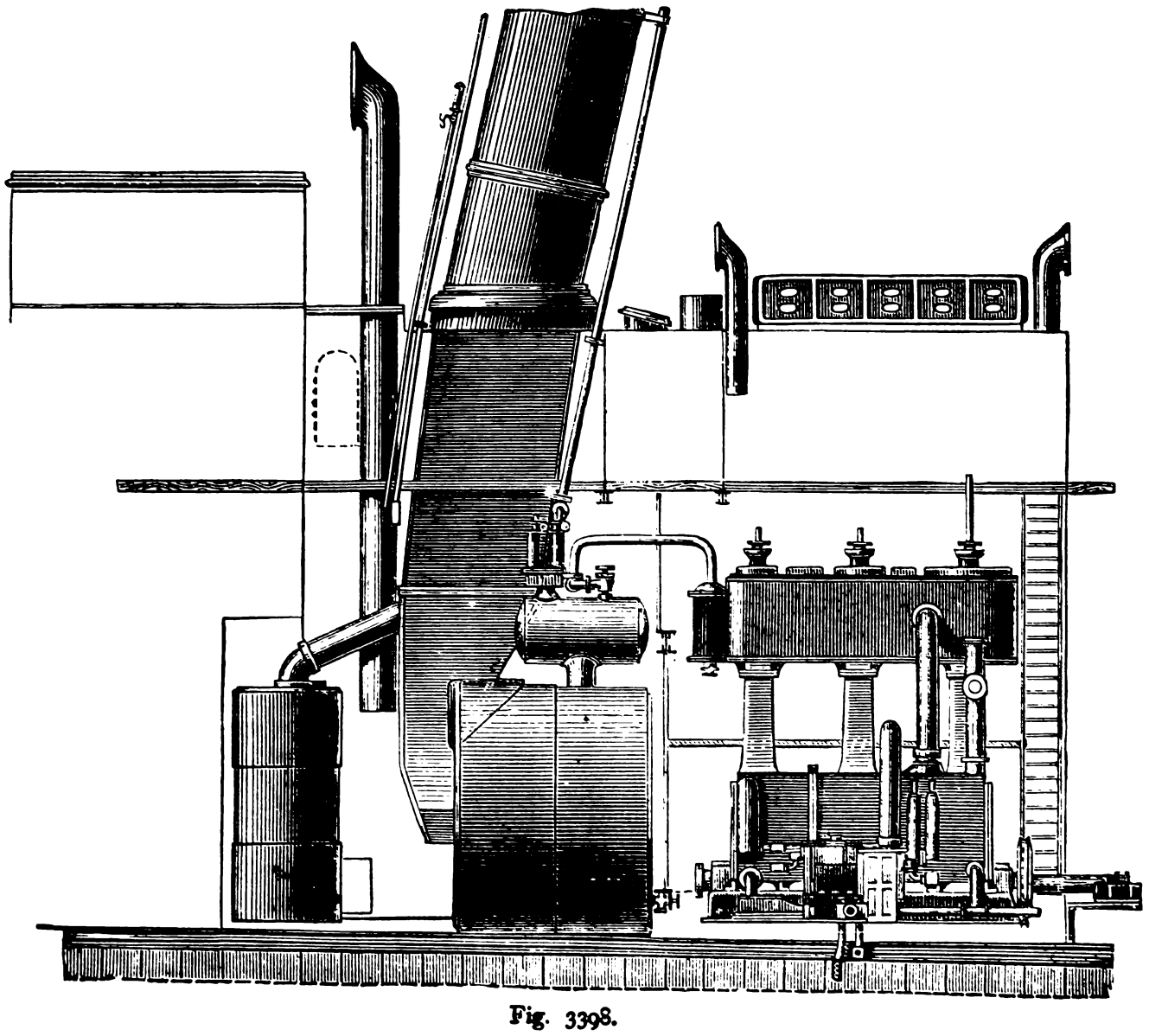

Fig. 3398.

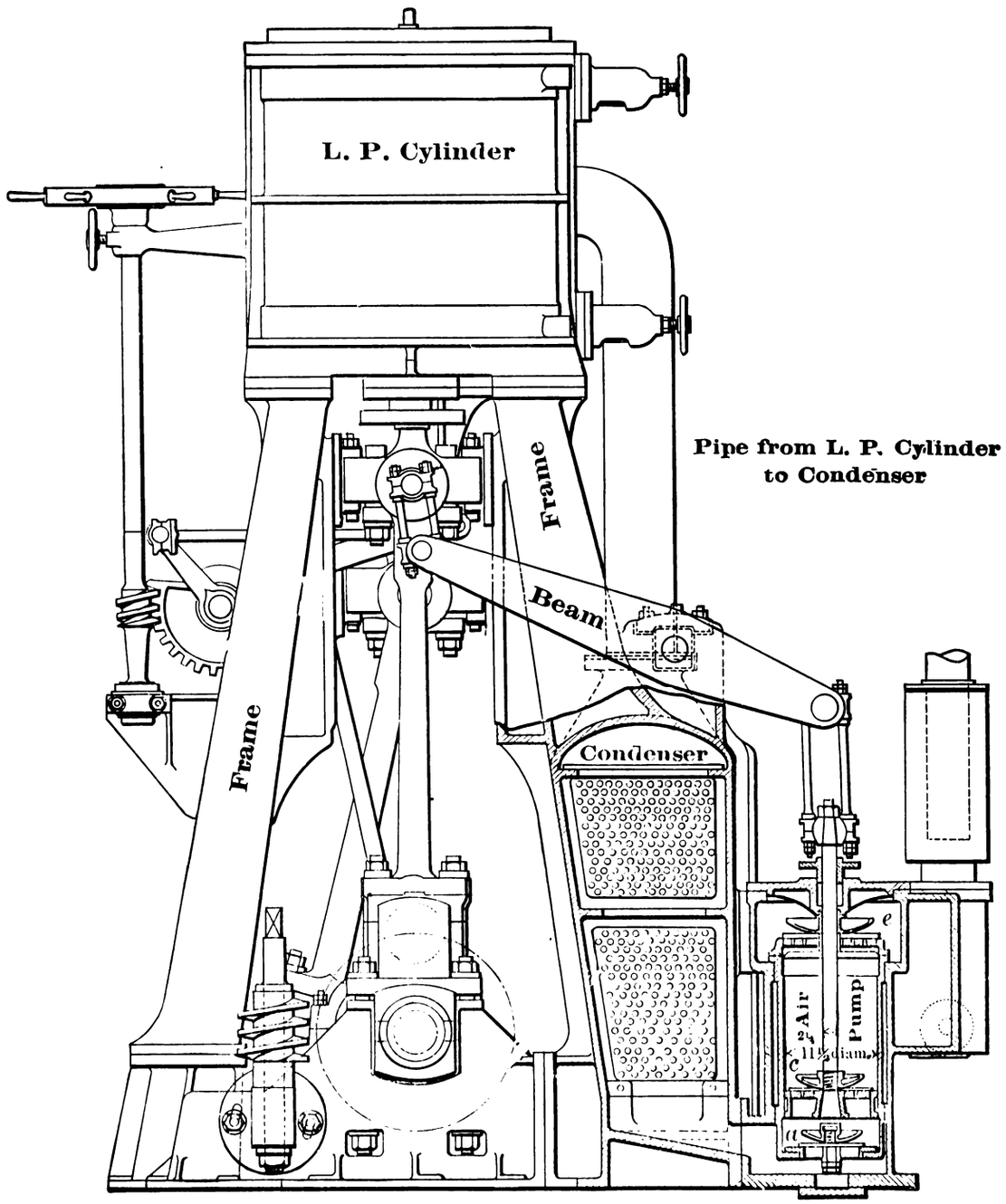

Fig. 3393.

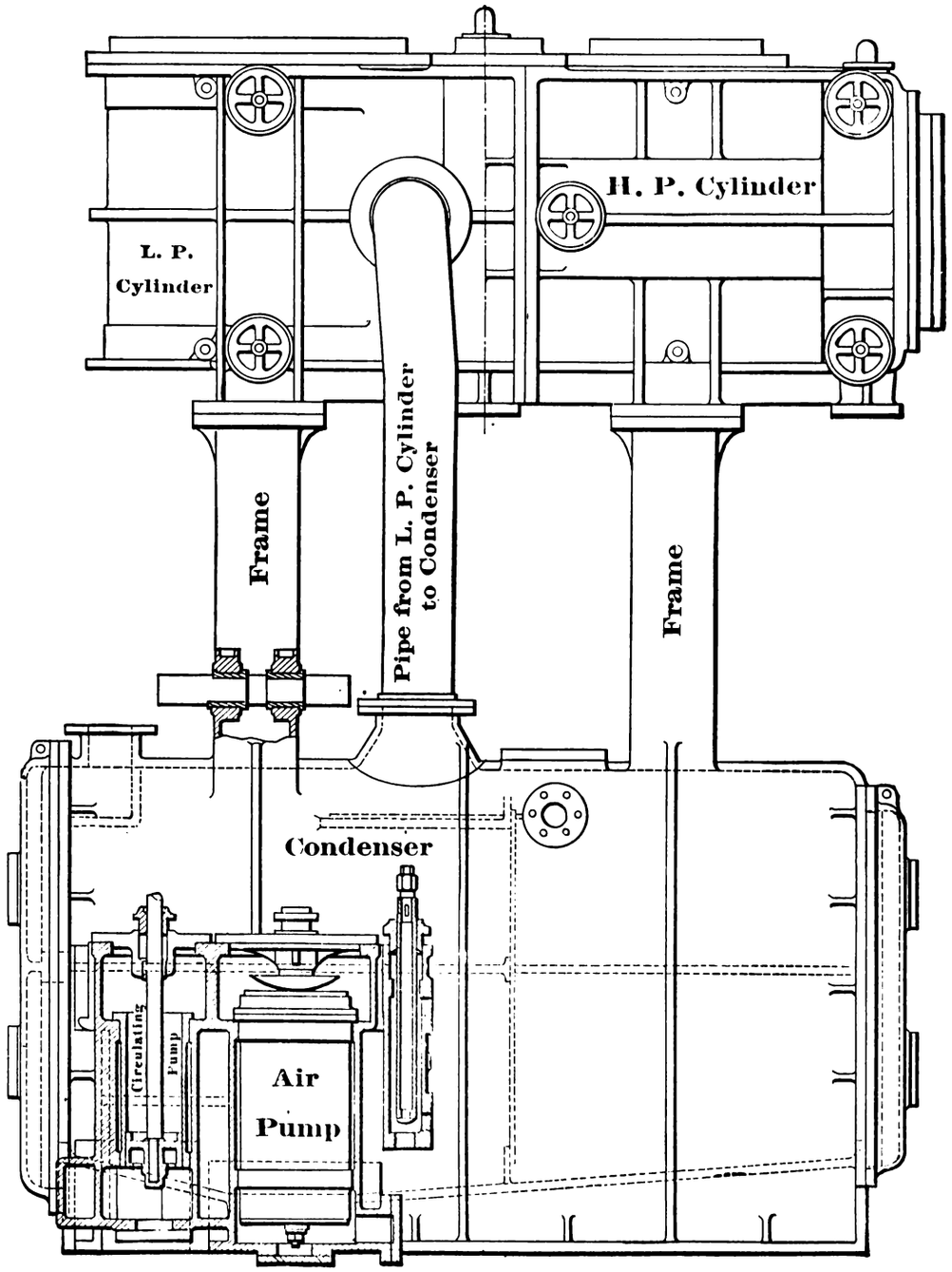

Fig. 3394.

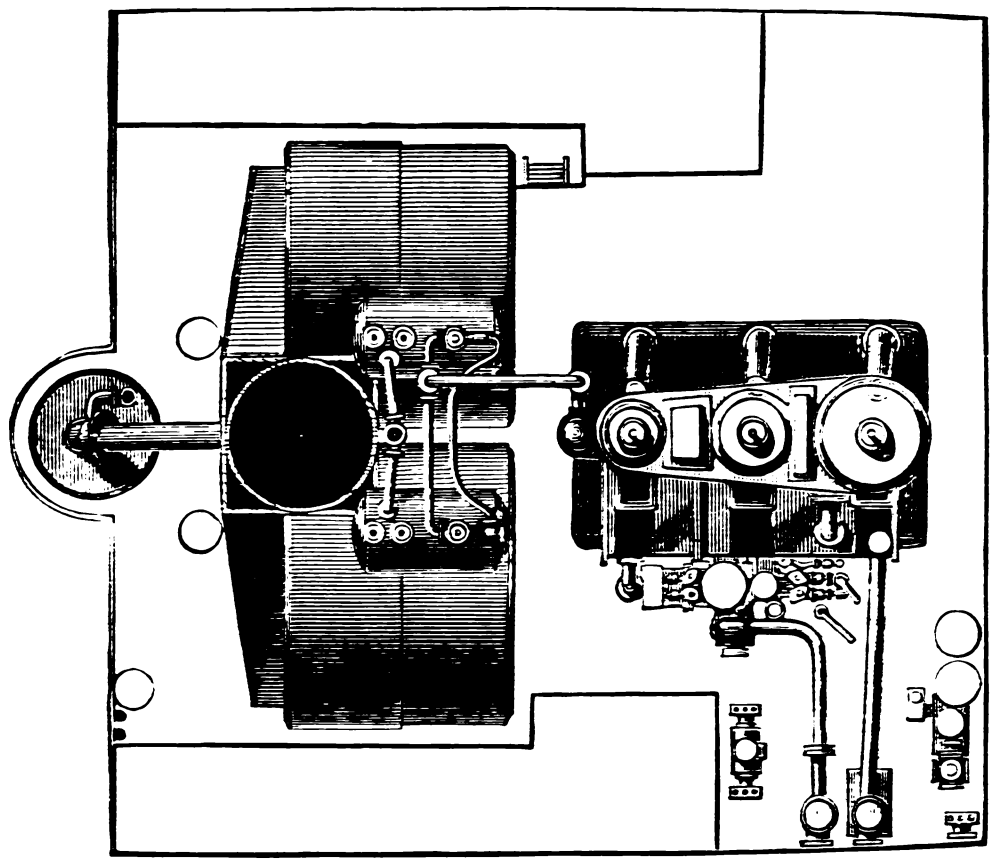

Fig. 3399.

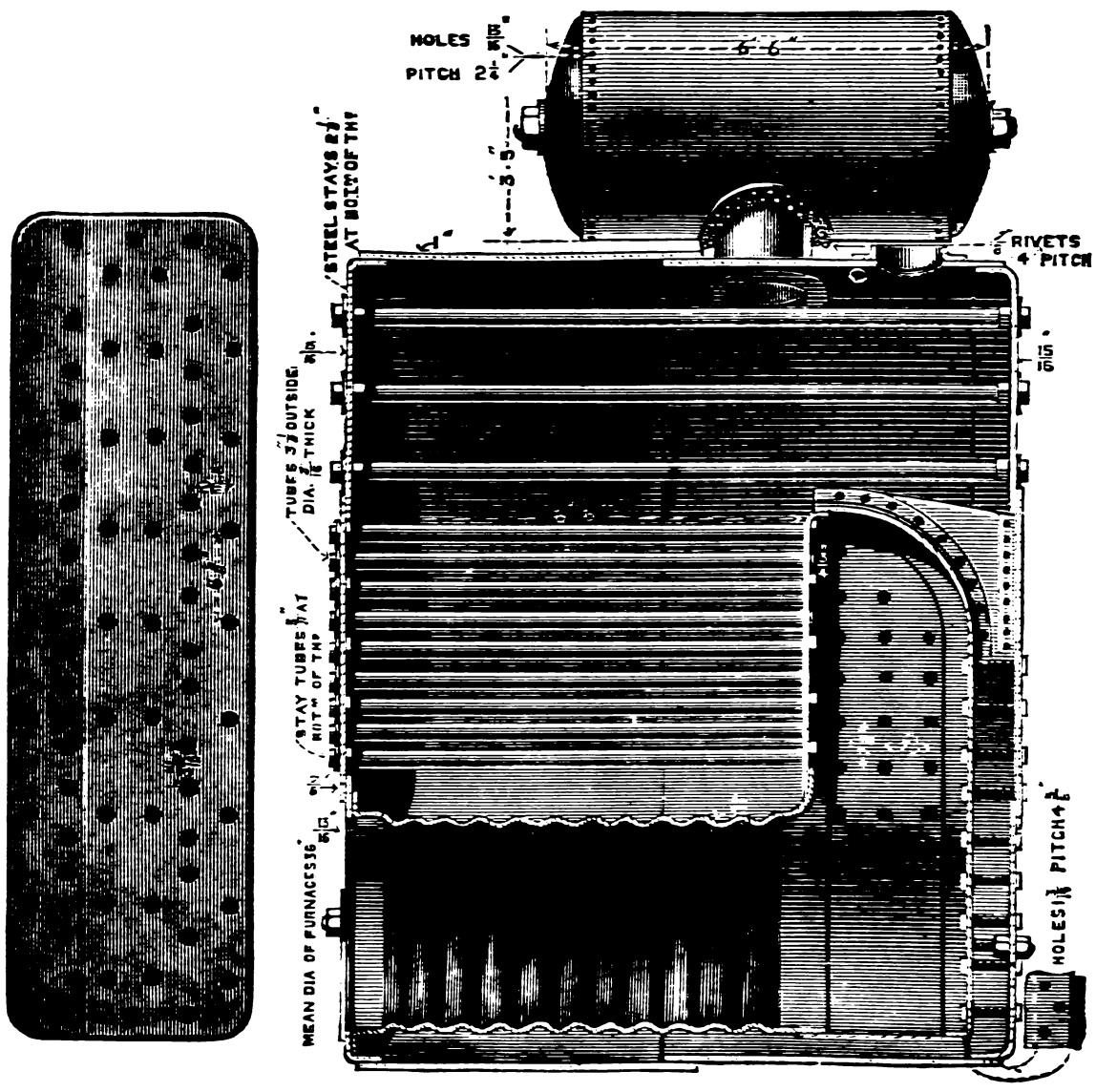

Fig. 3400.

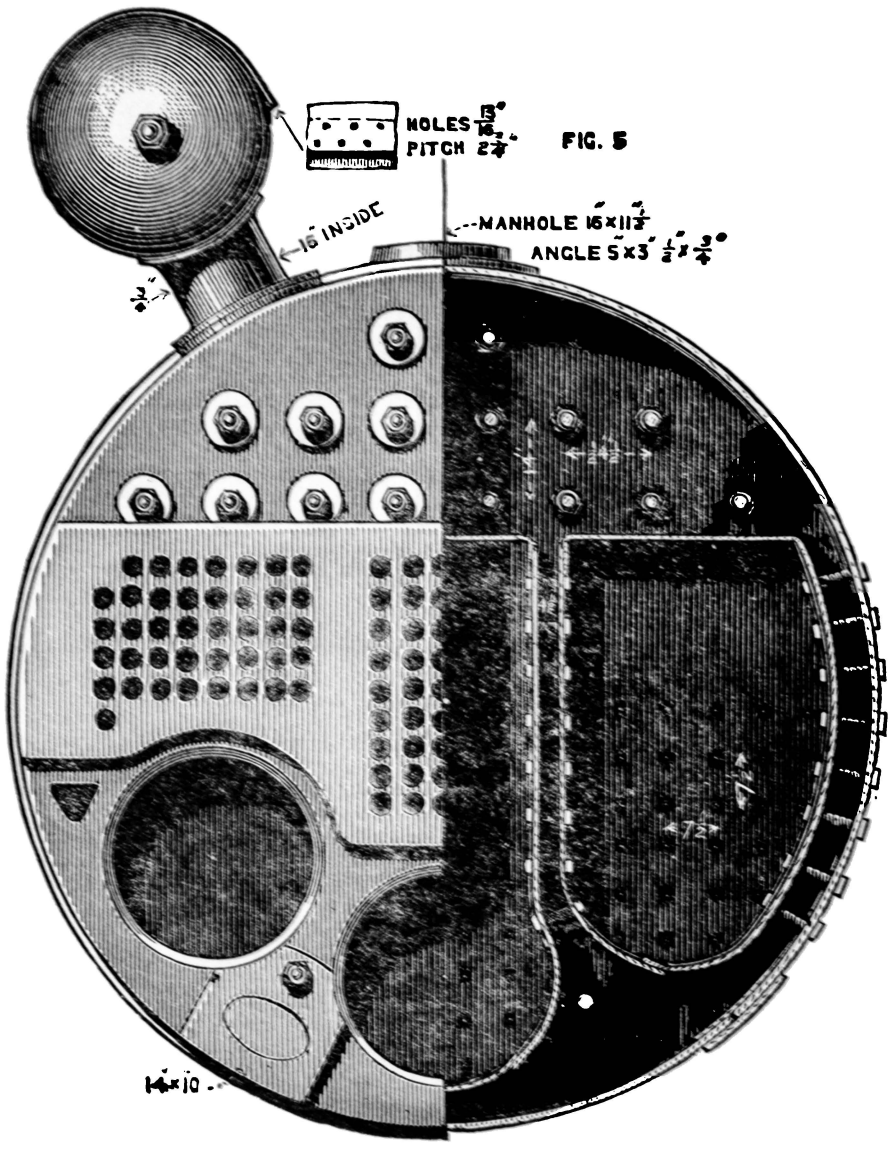

Fig. 3401.

cylinder is provided with a double ported flat valve as shown at B, and the low pressure cylinder is provided with a similar valve whose weight is counterbalanced by the small piston at E; at F are the relief valves for relieving the cylinders of water.

Each steam valve is provided with a link motion that may be used for varying the point of cut off (and therefore the expansion) as well as for reversing purposes.

The link motions are all shifted from one shaft, which may be operated by hand or by steam, the construction being as follows:

For shifting by hand, the wheel W is operated, its shaft having a worm driving the worm wheel G, Fig. 3403, which operates rod H, and through the lever J and rod K shifts the link L, one pair of eccentric rods being shown at N and P.

The shaft of the wheel W is, however, a crank shaft, and at M is a small engine, which may be connected or disconnected at will to shaft W. The lever J operates a shaft R in Fig. 3404, which connects (by a rod corresponding to rod K in Fig. 3403) to each link motion; hence all the links reverse together, and the ratio expansion of one cylinder to the other cannot be varied, or in other words, the point of cut off will be alike for each cylinder, let the link motion be shifted to whatever position it may.

The beam S, Fig 3403, for working the air, circulating and feed pumps, is driven from the cross head of the intermediate cylinder.

The boilers are of the Scotch pattern that is usually employed for high pressures, as 160 or more lbs. per square inch, and have Fox corrugated furnaces and stay tubes.

Each cylinder requires a starting valve (which is sometimes called an auxiliary valve or a bye pass valve), which is used to warm the cylinder before starting the engine, and also (when there is no vacuum in the condenser) to admit high pressure steam when the high pressure piston is on the dead centre, in which case, there being no vacuum and no admission of steam to the low press-

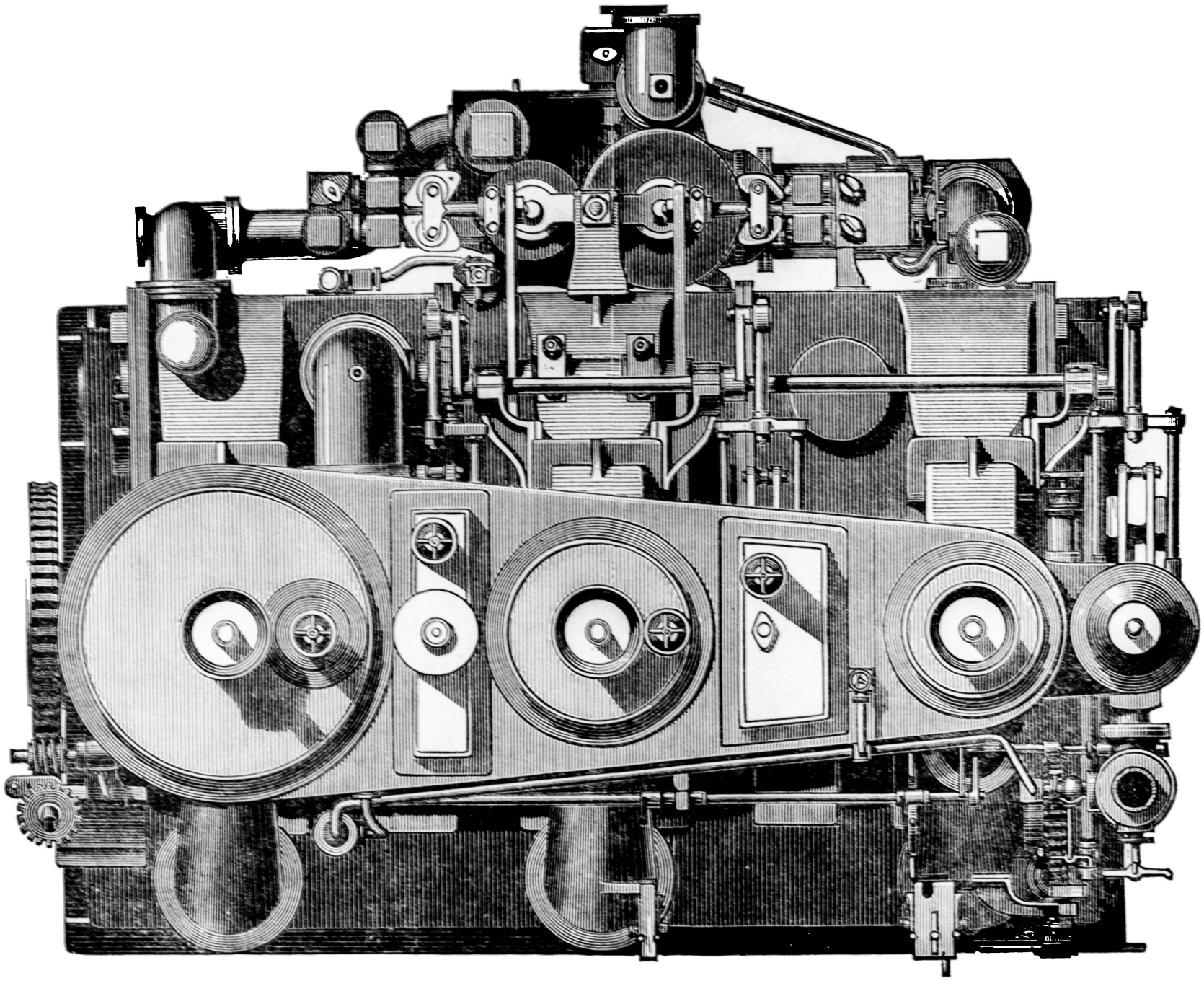

Fig. 3402.

ure cylinder, the engine would not have sufficient power to start.

In some cases the high pressure cylinder has no starting valve, the reversing gear being used to admit steam to one end or the other of the high pressure piston, and the starting valve being used to admit enough live steam to the low pressure cylinder to compensate for the absence of the vacuum.

When the vacuum in the low pressure cylinder is maintained while the engine is standing still, its starting valve obviously need not be used, except for warming purposes, before starting the engine; as soon, however, as the engine has started, the starting valve must be closed.

Each cylinder is provided with a relief valve, both at the top and at the bottom, to relieve the cylinder from a heavy charge of water, such as may occur if the boiler primes heavily.

Each cylinder is also provided with drain cocks, to permit of the escape of the ordinary water of condensation in the cylinders when the engine is started, and also for use if the boiler primes.

The low pressure relief valve also prevents the accumulation of too great a pressure in the low pressure cylinder, which, from its large diameter, is not strong enough to withstand high pressure.

The oiling apparatus for the cylinders is arranged as follows:

In some cases pumps, and in others automatic or self-feeding devices are used. Oil is fed to the steam pipe of the high press-

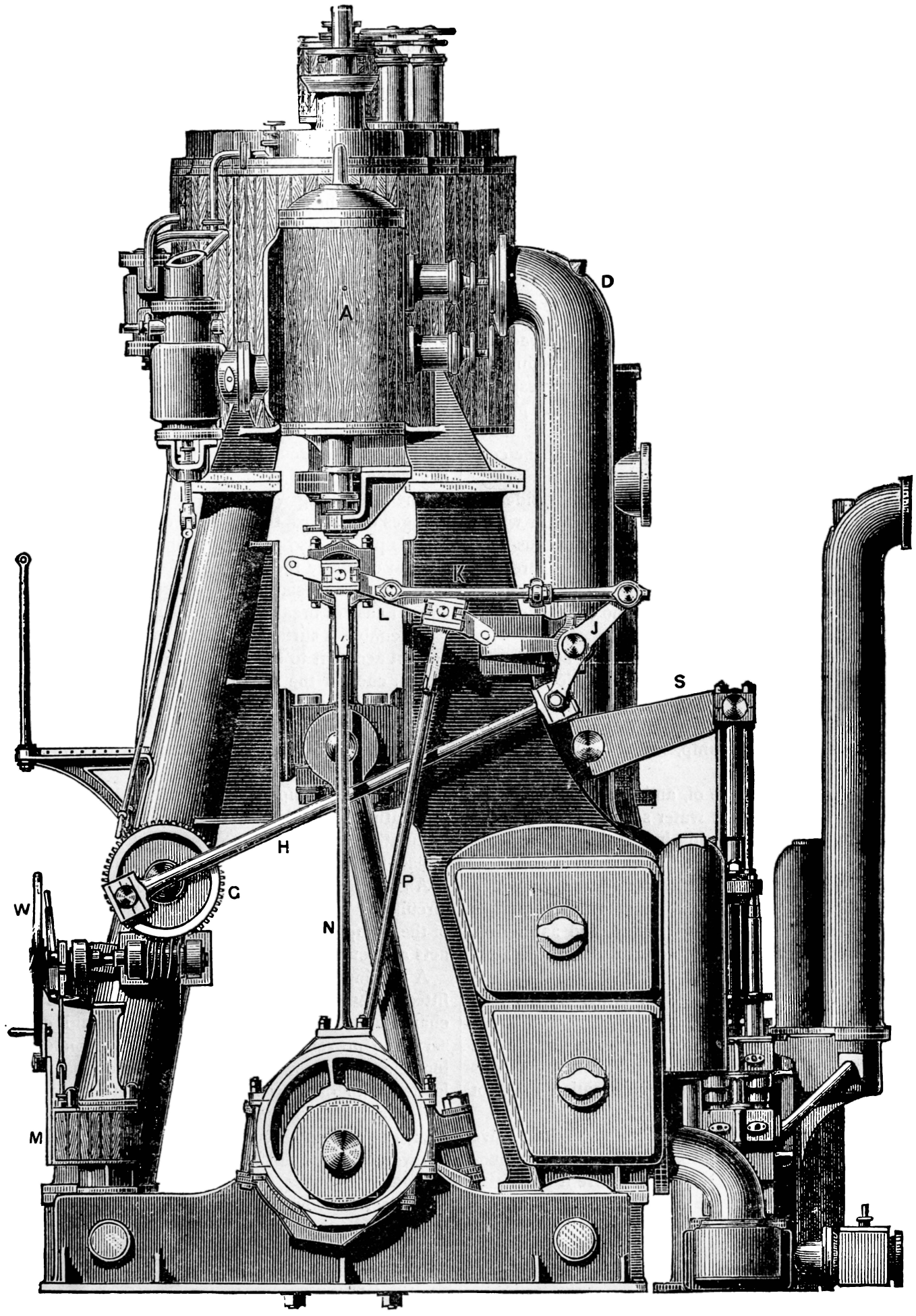

Fig. 3403.

ure cylinder, and this lubricates both the valves and the cylinders, but in many cases it is also fed to the steam chest, so as to afford more perfect lubrication to the valve.

For the low pressure cylinder the oil is fed into the receiver, and usually at a point near the slide valves.

Large marine cylinders are usually constructed with a separate lining, which may be replaced when worn or otherwise required.

A surface condenser consists of a cast iron shell or chamber forming the back of the engine frame. At each end of this chamber is a short partition, so that the condenser is divided lengthways into what may be called three compartments, of which the middle one is the longest and contains a number of thin brass tubes about $\frac{5}{8}$ or $\frac{3}{4}$ inch in diameter, the ends of these tubes being held in the plates or tube sheets forming the partitions. The object of providing tubes of small diameter is to obtain a large area of cooling surface.

The exhaust steam from the engine generally passes into the shell or body of the condenser, filling the middle partition and surrounding the tubes.

The condensing or circulating water passes through the tubes, and by keeping them cool condenses the steam and forms a vacuum or partial vacuum in the condenser, which, having open communication with the low pressure cylinder, therefore gives a corresponding degree of vacuum on the exhaust side of the low pressure piston.

In some designs, however, the steam passes through the tubes and the circulating water fills the middle compartment of the condenser. As, however, there is no pressure to counterbalance the weight of the water, it is preferable to have the water inside the tubes, so that they are subjected to a bursting pressure, in which case they may, for a given strength, be made thinner, because the strength of the tube to resist bursting is greater than its strength to resist collapsing, hence the circulating water usually passes through the tubes. The chamber at the ends of the condenser permits the water to distribute through all the tubes.

In some cases the chamber at one end is divided horizontally into two compartments, so that the water is compelled to pass through one half and return through the other half of the tubes.

The water of condensation falls to the bottom of the condenser, from which it is removed by the air pump, which delivers it to the hot well.

The hot well is situated on the side of, and extends above, the pump, whose upper end it covers, thus water sealing the top of the air pump and preventing air from passing into it through a leaky valve or bucket.

The top of the hot well is provided with a *vapor pipe*, which permits the air and gases to pass overboard. This pipe emerges through the side of the ship above the water line, and as there is no valve between the hot well and the sea, no pressure can possibly accumulate in the hot well.

The boiler feed is taken from the hot well either by the feed pump or by injectors, as the case may be.

In case the boiler feed should stop working, however, the hot well is provided with a pipe of large diameter, and called the overboard discharge pipe, so that the water of condensation may not accumulate a pressure in the hot well if the boiler feed ceases.

This overboard discharge pipe is provided with a weighted valve (placed at the side of the ship), which is constructed after the manner of a safety valve, relieving the hot well of pressure if the water accumulates, and preventing the sea water from entering the hot well.

To prevent loss of fresh water, the exhaust steam from the various engines and pumps (if any) about the ship passes to the condenser and is pumped into the hot well.

In some cases, however, a separate and independent condenser is used for the smaller engines about the ship.

An independent condenser is one whose air pump and circulating pump are not worked from the main engine, and can therefore be operated when the main engine is standing still.

If the main condenser is independent, it may be started so as to form a vacuum before the main engine is started, and thus obviate the use of the starting valve on the low pressure cylinder except to warm the cylinder before starting.

Feed water for the boilers when the engine is standing is obtained by a pipe from the bottom of the condenser, so that the water of condensation of steam blown through the engine cylinders, and from the exhausts from the smaller engines about the ship, may be pumped or forced direct from the bottom of the condenser to the boiler.

This feed from the bottom of the condenser is necessary when the air pump is not working, and the water of condensation is not pumped into the hot well.

If the water thus obtained is not enough to keep the boilers supplied, an auxiliary or salt water feed admits extra water from the circulating water to the inside of the condenser to supply the deficiency.

This secondary suction pipe is provided with a valve because it must be shut off before the engine is started.

All the drain pipes from the cylinder pass into the condenser so as to save the fresh water.

The air pump is usually worked by a beam, receiving motion from the cross head of the low pressure cylinder.

The circulating pump is usually worked by the same beam as the air pump, or receives its motion from some other part of the main engine. In some cases, however, an independent circulating pump is employed.

It receives its water from a pipe leading to the sea, which is provided with an injection cock or Kingston valve, placed close to the side of the ship and well below the sea level. This valve is used to shut off the circulating water and prevent its flooding the ship in case of accident to the condenser or circulating pump.

The circulating water, after passing through the condenser, discharges overboard through the circulator discharge pipe.

This pipe is also provided with a valve placed close to the ship's side, at or above the water level, so that the opening at the ship's side may be closed, and sea water prevented from entering the ship in case of breakage to the condenser, etc.

To enable a surface condenser to be used as a jet condenser in case of accident to the circulating pump, a pipe leads from the injection cock of the circulating supply pump into the bottom of the exhaust pipe or column, where it enters the condenser.

This pipe is supplied with a spray or rose nozzle, which divides up the injection water and causes it to condense the steam as it enters the condenser.

An additional pipe is sometimes added to the suction side of the circulating pump, for use in pumping out the bilge by means of the circulating pump in case of emergency, and also for pumping out ballast tanks when the vessel is provided with such tanks.

An air valve is sometimes fitted to a reciprocating double acting circulating pump. It admits air to the water during the up stroke of the pump, and closes on the down stroke. The air thus admitted acts as a cushion to soften the shock of the water.

A snifting (or snifter valve, as it is sometimes called) is a valve fitted to the condenser and that opens upwards to permit of the discharge of the air and gases before the engine is started. It also serves to prevent any water from leaky condenser tubes from filling the condenser and flooding the engine cylinders. It is so loaded with dead weight that it opens automatically when the water in the condenser has reached a certain height and must be placed as low down on the condenser as possible, so as to receive the weight of the full height of the water in the condenser.

Condenser tubes are made water tight in the tube plates of the condenser by wooden or sometimes paper ferrules, which fit the tube and drive into the tube plate. In other cases, however, the tube ends project through the plates, and a rubber washer is placed on the end of each tube. A covering plate is then bolted over the whole of the tube ends, the holes in the covering plate being parallel for a short distance, and then reduced in diameter so as to form a shoulder. The rubber rings compress and make a joint, and the shoulders prevent the condenser tubes from working out endways from expansion and contraction. The tubes are usually about $\frac{3}{64}$ inch thick.

A blow through valve is a valve attached to the casing or steam chest, and connecting by a pipe to condenser to blow out the air and gases that may have collected there when the engine is standing still, and that also connects to the exhaust port of the high pressure cylinder, so as to supply live steam to the low pressure

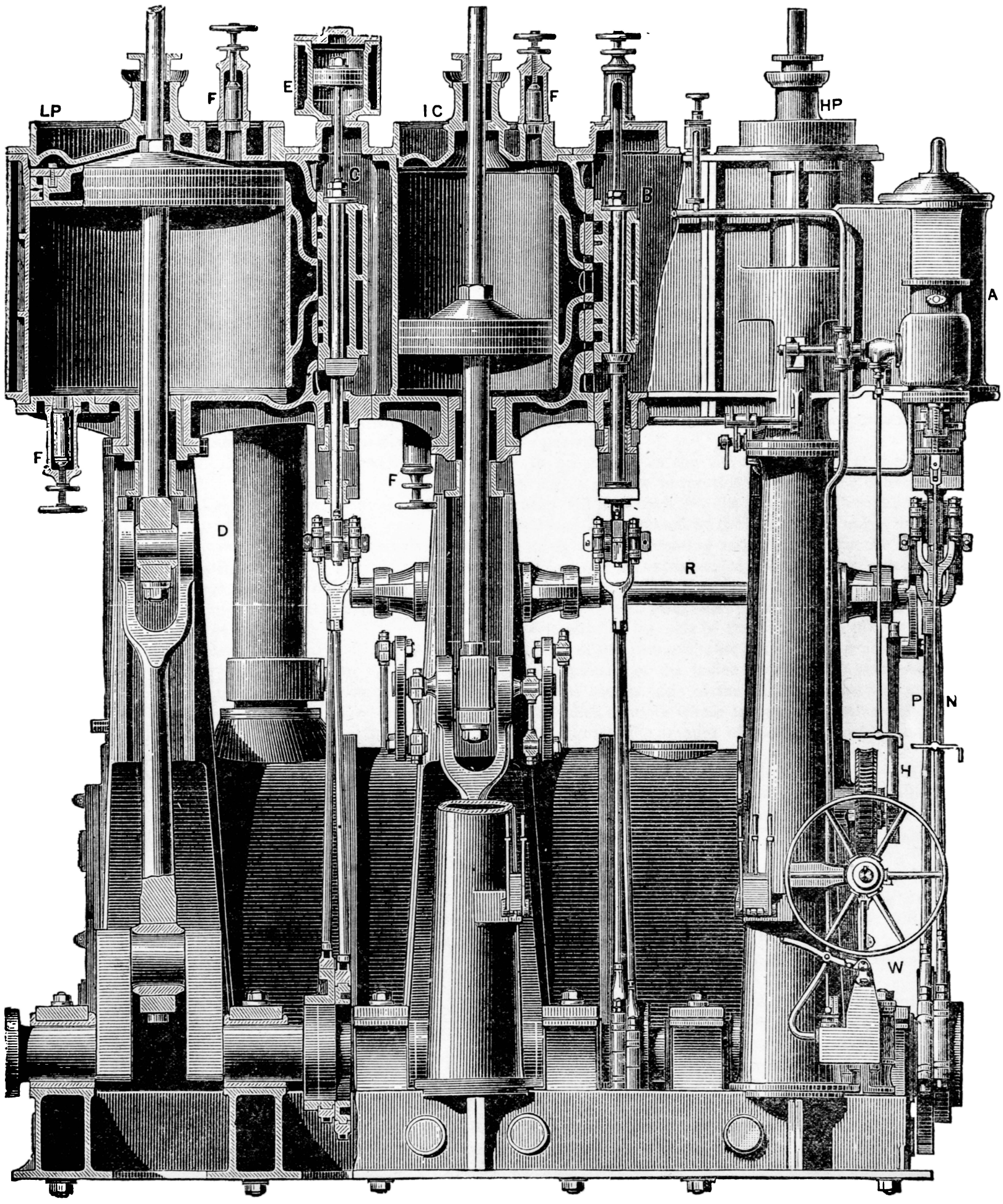

Fig. 3404.

cylinder in case the high pressure cylinder should get disabled.

A bucket air pump is one in which there is a valve or valves in the pump piston, hence the pump is single acting, drawing on the lower side of the piston and delivering on the upper, hence the capacity of the pump per engine revolution is equal to the diameter of the bucket multiplied by the length of its stroke. The suction or foot valve is at the foot of the pump, and the delivery valve at the head.

A piston air pump is double acting, since it draws on each side alternately of the piston, one side delivering while the other is drawing, hence two suction and two delivery valves are required.

A plunger air pump is one in which a plunger is used in place of a piston, the delivery being due to the displacement of the plunger.

An air pump trunk is a hollow brass cylinder attached to or in one piece with the piston or bucket of the air pump. The rod which drives the piston passes through the trunk, and connects to a single eye at the bottom of the trunk.

A trunk air pump is necessary when the pump rod is driven direct from the crank shaft, and therefore has sufficient lateral motion to push the pump piston sideways, which would cause friction and excessive wear to the gland that keeps the trunk tight. The delivery capacity of the pump is obviously diminished to an amount equal to the displacement of that part of the plunger that passes through the gland and within the pump bore, whereas in a piston pump the delivery capacity is only diminished to an amount corresponding to the displacement of the pump piston rod.

A bucket pump may in some cases be worked without either a foot or a head valve, since the bucket valve will answer for both in cases when the delivery water cannot pass back into the pump on the down stroke of the bucket.

It will, however, be more efficient with the addition of either of them, and most efficient with both.

A bucket pump with a foot valve and no discharge valve would, however, suffer more from a leaky gland than if it had a discharge valve and no foot valve, because the air would, on the ascent of the bucket and the closing of the bucket valve, pass to the suction side of the bucket and impair the vacuum.

Let the delivery valves be where they may, the foot valve will always have some water above it, and the pump bucket will dip into this water, and on lifting produce a vacuum that will cause the pump to fill with water. Notwithstanding that the gland may leak air on the other side of the bucket, this air will in a single acting pump be expelled with the water, but in a double acting pump it will impair the vacuum, and therefore the suction, on the gland side of the piston.

Bucket air pumps are provided with a valve or pet cock on the top or delivery side of the bucket and above the bucket, when the latter is at the highest point of its stroke. This valve opens on the descent of the bucket, admitting air to act as a cushion between the surface of the water and the delivery valve, when the water is about to meet the latter. It obviously reduces the effectiveness of the pump, and in a double acting pump is inadmissible, because of its impairing the vacuum and the suction.

This valve also enables the engineer to know whether the air pump is working properly.

A pet cock is also supplied to the feed pumps for this same purpose.

A bilge injection is one in which the injection water is taken from the bilge, which may be done when the ship makes more water than the bilge pumps can get rid of.

The fittings necessary for a bilge injection are a cock or globe valve placed on the side of the condenser, and at or near the foot of the exhaust pipe, with a spray or rose inside that pipe. From the cock a pipe, usually lead, leads to the bilge, having at its end a strainer or strum, and care must be taken that this strum does not get choked and let the condenser get hot from the exhaust steam not being condensed.

The water in the hot well of a surface condenser is usually kept at a temperature of about 100° Fahrenheit. A higher temperature than 100° Fahrenheit injures the rubber valves of the air pump, while lower temperatures cool the engine cylinders too much and cause waste from cylinder condensation. Moreover, it is obvious that, since the boiler feed is taken from the hot well, it is desirable to keep it as hot as the valves and as the desired degree of vacuum will permit.

An air vessel or air chamber is a vessel fitted to the delivery and sometimes also to the suction side of a pump. Its office is to maintain a steady flow of water through the pipes.

Thus, in the case of the delivery air chamber, when the pump piston is travelling at a speed above its average for the stroke, the water accumulates in the air chamber, and the air is more compressed, while, when the pump is on the dead centre, or at the end of its stroke and the delivery valve closes, the air compressed in the air chamber continues the delivery or discharge, thus maintaining a more uniform flow.

Pumps sometimes have an air or vacuum chamber on the suction side, from which the air is exhausted when the pump starts, leaving a vacuum which causes a steady flow of water up the suction pipe.

Both these chambers are more effective as the speed of the pump increases. The chamber on the delivery side is apt to lose its air, which is gradually absorbed by the water, which should be let out when the pump is standing still.

Feed escape valves or feed relief valves are fitted to the feed pumps, so that in case all the feed water cannot pass into the boiler it may pass back to the hot well.

The construction of a feed escape valve is as follows:

It is an ordinary mitre valve held to its seat by the compression of a spiral spring, whose pressure upon the valve may be regulated by an adjusting screw, whose end abuts upon a stem provided for the purpose.

In proportion as the valve is relieved of the pressure of this spring, a greater proportion of the water delivered by the feed pump will pass back into the hot well, hence the amount of boiler feed may be regulated by the feed escape valve, which also acts as a safety valve, preventing undue pressure in the feed pipe.

When no feed escape valve is employed, the delivery water from the feed pump must pass unobstructed to the boiler, or the feed pipes may burst from over pressure, and it follows that the feed check valve on the side of the boiler must not be restrained in its amount of lift, hence it must not have a lift adjusting screw.

The amount of the boiler feed must, in this case, be regulated from the suction side of the pump, the suction pipe being fitted with a cock or valve whose amount of opening may be adjusted so as to regulate the amount of water drawn per pump stroke from the hot well.

If the feed valve on the suction side, or the escape valve on the delivery side of the pump, as the case may be, is adjusted to permit of a proper amount of boiler feed, and yet the feed is insufficient or ceases altogether, it may occur from the following causes:

1st. From the suction valve sticking or being choked, or from the delivery valve being choked and not seating itself, thus either letting the suction water pass back into the hot well, or the delivery water pass back into the pump.

2d. Through leaks in the joints of the pump or of the suction pipe.

3d. From the water in the hot well being too hot.

4th. Through the spring of the escape valve having become disarranged.

5th. If two or more boilers are connected, and one has less pressure in it than the other, it may take most of the feed water, or the water of the other may empty itself into it.

Bilge Injection. The injection water for a common or jet condenser may be obtained in one of two ways: first, direct from the sea, which is that for ordinary use; and secondly from the bilge, which is resorted to to assist the bilge pump in cases of emergency.

The necessary fittings for a bilge injection are, a pipe leading from the condenser to the bilge, with a cock at the condenser end and a strainer at the bilge end.

This pipe should be fitted with a check valve, which opens by lifting upwards so that no water can pass down it into the bilge, or otherwise, if the main and bilge injections should happen to be

left open together, the water from the main injection might pass down into the bilge. This check valve should be so constructed that its amount of lift can be regulated and as much of the bilge water used for injection as the circumstances may require.

In the case of surface condensers, the bilge water is drawn off by the circulating pump and used to supplement the main circulating water. The pipe from the bilge in this case leads to the suction side of the circulating pump, and requires a strainer at the bilge end, a cock at the circulating pump, and a check valve.

A ship's side air pump discharge valve is an ordinary dead weight mitre valve that opens to let the water pass out into the sea, but seats itself and closes if the water attempts to pass inwards. It differs from a common stop valve in being weighted, and therefore self-acting. It requires to be lifted before starting the engine, as such valves are liable to stick in their seats.

The course of the main injection water of a jet condenser is as follows: From the rose plate or strainer, through the injection valve and pipe to the condenser, where it mingles with the exhaust steam and from which it is pumped with the products of condensation into the hot well. From the hot well it passes mainly overboard through the Kingston valve, but that part of it used for the boiler feed passes through the suction pipe and valve into the pump, and thence through the delivery valve, pipe and check valve into the boiler.

The course of the main circulating water of a surface condenser is through the Kingston valve (on the ship's side or bottom), and the circulator inlet pipe, either direct to the condenser, from which it is *drawn* by the circulating pump, or else it passes through it, and is *forced* through the condenser. It circulates through the condenser twice or thrice according to the construction, and is forced overboard by the action of the circulating pump, passing through a valve on the ship's side or bottom.

The advantages of surface condensation are, first, that the feed water is obtained at a higher temperature than if injection water was fed to the boiler. Second, the feed water is purer, and therefore less water requires to be blown out of the boiler in order to keep it clean. Third, the boiler does not scale so much, hence its heating surface is maintained more efficient; and fourth, the boiler suffers less from expansion and expansion strains when hot feed water is used.

Surface condensers foul from the grease with which the cylinders are lubricated and from the salt in the injection water. The condenser is cleaned by the admission of soda with the exhaust steam and by washing out.

A condensing engine has the following cocks and valves on the skin of the ship in the engine room: The main Kingston valve for the injection, or circulating water, the main delivery valve from the condenser, the bilge delivery valves, and the water service cocks for keeping the main bearings of the engine cool with streams of cold water.

A donkey engine is a small engine used to feed the boiler, and has the following connections: A steam pipe from the boiler to drive the donkey engine; and exhaust pipe into the condenser; a suction pipe from the hot well or from the sea, as the case may be; and a delivery pipe to the boiler; a suction pipe from the bilge, so that the donkey pump can assist in pumping the bilge out; a suction pipe to the condenser, to circulate the water when the main engines are stopped, and thus maintain the vacuum; and a suction pipe from the water ballast tanks, to pump them out when necessary.

The pipes that lead from, or go to, the sea are: Boiler blow off pipe, sea injection or circulator pipe, condenser discharge pipe, and, in some cases, donkey feed suction pipe.

The parts of an engine that are generally made of wrought iron are those in which strength with a minimum of weight and size is desired; for example, the piston rod, cross head, connecting rod, crank shaft, crank, eccentric rods, link motion, valve spindle pump rods, and all studs, bolts, and nuts.

The parts generally made of cast iron are those where strength and rigidity are required, and which are difficult to forge, while weight or size is of lesser importance, such as the bed plate, cylinders, pistons, condensers, and pumps.

The parts sometimes made of steel are those subject to great wear, and for which strength with a minimum of size is necessary, as piston springs, piston rods, connecting rods, cranks, crank pins, and valve rods.

The parts generally made of brass are those subject to abrasion or corrosion, as the connecting rod brasses, the bearings for the crank shaft, the pump plungers or pistons, and their rods, linings for the pump barrels or bores, the bores of the glands, the condenser tubes, and all cocks and valves.

White metal or babbitt metal is sometimes used in place of, or in connection with, brasses, serving as an anti-abrasion surface. It is easily renewed, as it is cast into its place, but will melt and run out at a temperature of about 600° Fahrenheit.

Muntz metal is used where iron or steel would suffer greatly from corrosion when in contact with salt water. It can be forged.

The difference in the composition of cast iron and steel has never been determined; the difference lies in the percentage of carbon they contain and the structure of the metal. Cast iron will not weld.

Cast iron is brittle, of granular structure, and always breaks short, having a very low elastic limit.

Wrought iron is tough and fibrous, will weld but will not harden, and is stronger than cast iron.

Steel is stronger than wrought iron, and will weld and harden and temper. The breaking strain of wrought iron varies from about 42,000 to 60,000 lbs. per square inch of section.

Steel is tempered by first being heated red hot and suddenly cooled (usually by plunging it into cold water), which hardens it. The surface is then brightened, and on being repeated the tempering colors appear, beginning at a pale yellow, and deepening into red, brown, purple, and blue, the latter gradually fading away as the metal is re-heated to a red heat. The higher the temperature to which the hardened steel is reheated the softer or lower it is tempered.

These colors merely indicate the temperature to which the piece is reheated, since they will appear on steel not hardened and upon iron.

Case hardening is a process that converts the surface of wrought iron into steel, which is accomplished by placing them in a box filled with bone dust, animal charcoal, or leather hoofs, etc. The box is sealed with clay, heated red hot for about 12 hours, and the pieces are quenched in water.

The parts usually case hardened are the link motion, and other light working parts that are of wrought iron.

The forgeable metals used in engine work are wrought iron, steel, copper, and Muntz metal. The brittle or short metals are cast iron and brass.

Welding is the joining of two pieces solidly together. Wrought iron, steel, and Muntz metal can be welded.

All the metals used in the construction of marine engines expand by heat, and this is allowed for in adjusting the lengths of the eccentric rods, or of the valve spindles when setting the valve lead. In the case of two marine boilers being connected together, the steam pipe is fitted with an expansion joint, one pipe end having an enlarged bore to receive the other. The joint is made by packing, which is squeezed up by a gland, whose bore fits on the outside of the pipe which moves through the gland bore, from the expansion and contraction.

The piston of a marine engine steam cylinder is a disc of cast iron, into which the piston rod is secured. Its body is cored out to lighten it. Around its circumference is a recess to receive the packing ring or rings, each of which is split across so that it may be expanded (to fit the bore of the cylinder) by means of the packing or of the springs. The split is closed in the centre by a tongue piece let into the ring, and fastened to one end of the ring.

To hold the piston rings or ring in place, a junk ring is employed, being an annular ring bolted to the piston. The piston rings are set out to fit the cylinder bore by suitable springs. The round plugs seen on the piston face merely fill the holes used to support the core in the mould and to extract it from the finished casting.

Cylinder drain cocks sometimes have a check valve upon them, so that while the water may pass out of the cylinder the air can not pass in and destroy or impair the vacuum.

Cylinder escape or relief valves are provided at the top and at the bottom of the cylinders, and consist of a spring loaded valve with an adjusting screw to regulate the pressure at which they shall act. They are most needed when the boiler primes heavily, and the water might knock out the cylinder heads or covers. They should be enclosed in a case with a pipe to lead the water away, thus preventing it from flying out and scalding the engineer.

A link motion is a valve gear by which the engine may be reversed (caused to run in either direction), or which may be used to vary the point of cut off. The advantage of the link motion is its simplicity and durability.

A link motion for a marine engine is usually of the Stephenson type, and consists of two eccentrics or eccentric sheaves fixed upon the crank shaft, and so set as to give more lead at the bottom than the top ports, because the wear of the journals, brasses, and pins gradually increases the lead at the upper, and correspondingly diminishes that at the lower port. In addition to this, however, more lead is required at the bottom port, to counterbalance the weight of the piston at the end of its descending stroke. The eccentric hoops or straps drive the rods which connect to the ends of the link.

The link may be a curved, solid, or a slotted bar, and in either case has fitted to it a block or die which connects to the valve spindle.

The link is pivoted at its centre to a swinging arm or suspension link,* and by this arm may be moved endways to bring the required end of the link beneath the valve rod or spindle. From the positions in which the eccentrics are set, one end of the link operates the valve to go ahead, while the other end operates it to go astern; hence all that is necessary (so far as the link motion is concerned) to reverse the engine is to move the link endwise to the requisite amount, which, for full gear, is so that the block is at or near the end of the link.

In proportion as the link block is (by moving the link endways) brought nearer to the middle of the link, the valve travel is reduced and the point of cut off is hastened, thus increasing the expansion.

When the link block is in the middle of the link, the latter is in mid gear, and the valve only opens the ports to the amount of the lead, and the link action is the same, whether the engine moves backwards or forwards.

The motion of the link is as follows:

The two ends are vibrated by the eccentrics from the central pin of the link hanger (or suspension link) as a centre of motion, while at the same time this end of the link hanger swings in an arc of which its other end is the centre of motion.

In small engines the link is sometimes used for varying the expansion as well as for reversing the direction of engine revolution.

In large engines it is used for reversing only, a separate expansion valve being used for varying the point of cut off.

In small engines the link is moved endwise for forward or backward gear by a simple arrangement of hand levers. In large engines these levers are supplemented by a worm and worm gear, and in still larger engines a steam reversing gear is used for shifting the links from forward to backward gear, or vice versa.

When there is no link motion, a Joy valve gear, a Marshall valve gear, or a loose eccentric may be used. A loose eccentric is one that can be moved around the shaft to reverse the engine. It may be moved around the shaft by mechanical means, or the eccentric rods may be disconnected, and the valve worked by hand, to cause the engine to run in the required direction, until a pin fast in the shaft meets a lug on the eccentric and drives it, there being two such lugs or shoulders spaced the requisite distance apart on the eccentric. This plan is obviously only suitable for small engines.

A separate expansion valve is a valve employed to effect the cut off and vary the expansion. It does not affect either the admission or exhaust of the steam to the cylinder.

It is used because by its means an early point of cut off and high rate of expansion may be obtained with a fixed point of exhaust, a fixed amount of compression, and a fixed amount of lead, whereas with the link motion alone the exhaust occurs earlier in the stroke, and the compression and the lead increase as the link is moved from full gear towards mid gear. The expansion valve should, when the engine is to be started, be set for the latest point of cut off. The eccentric for the expansion valve is set opposite to the crank, in order that its action may be the same, whether the engine runs backward or forward.

The small cylinders on top of the steam chests are for the purpose of guiding the upper ends of the valve spindles, and are fitted with pistons having steam beneath, the space above being in communication with the condenser. The steam pressure on the piston supports the weight of the valves and valve gear.

The friction of a slide valve may be relieved or reduced by excluding the steam from its back, which is done by various means, such as by a ring cast on its back and working steam tight against a plate held independently of the valve. The interior of the ring should be open to the exhaust.

The friction of a slide valve is caused by the steam pressing it to its seat, the amount of this pressure varying with the fit of the valve to its seat, and its position over the ports, or, in other words, upon how much of the valve area has steam pressing on one side only.

The travel of the eccentric rod is the distance it moves measured on a straight line. It is equal to twice the throw of the eccentric.

The throw of an eccentric is the distance between the axis of its bore and the centre or axis from which its circumference was turned in the lathe.

Double beat valves are composed of two discs or mitre valves, one above the other on the same stem, so that as the steam presses on the opposite faces of the two discs the valve is balanced. The objection to their use as safety valves is, that they are balanced and would not lift unless the area of the upper disc was made larger than that of the lower one, in which the objection would remain that the two discs do not expand equally, hence they are apt to leak. They are sometimes used instead of slide valves, but are objectionable because a separate admission and exhaust valve is required at each end of the cylinder, and because at quick speeds of revolution they fall to their seats with a shock or blow which wears out both the valve and the seat. When a high piston speed is obtained by great length of piston stroke, and not by high rotative speed, their use is less objectionable.

Expansion joints are joints which permit the parts they connect to expand and contract without straining them. They are necessary on the steam pipe connecting one boiler to another, and on the main steam pipe from the boilers to the engine. The working surfaces require to be of brass, so that they will not corrode.

They require the collar on the internal pipe of the joint (on which the gland fits) to be permanently fixed by soldering or brazing, and check nuts on the studs, so that the internal pipe shall not be blown out from the steam pressure.

This pipe is also sometimes fitted with chains or stops, in case the studs should break, or the nuts or collar strip.

An oil cup is either a cavity cast in the piece or a cup shaped vessel or hollow cylinder screwed in. It contains a pipe extending up about three-fourths of its height, and through this pipe the oil is fed to the surface required to be lubricated. A hinged lid or, in some cases, a screwed cap covers the oil cup to exclude dust, etc.

The syphon or worsted consists of a number of threads of worsted or lamp wick of equal lengths; a piece of lead or copper wire is laid across the middle of the worsted, the copper wire is doubled and twisted and is then pushed down the tube, carrying the doubled end of the worsted with it. The upper ends of the wire are bent over the end of the tube so as to hold the worsted, whose lower end should pass down below the level of the bottom of the oil cup. The oil feeds (on the syphon principle) through the medium of the wick or worsted, which should not fit the tube tight but quite easily, its upper ends hanging over the top of the tube to the bottom of the cup.

The worsted may be cleaned with scalding water, or by water thrown upon it from the boiler.

Tallow cups for high pressure cylinders must have two cocks, so that after the cup is filled the top cock may be closed and the bot-

* See page 383 for the construction of a link motion.

tom one then opened. The top cock prevents the tallow or oil from being blown out of the cock by the steam. For the low pressure cylinder a cup with a single cock will answer, as the cock may be opened when the vacuum is at that end of the cylinder, and the air will force the oil or tallow in.

A steam lubricator or impermeator is an automatic oil feeding device placed on the steam pipe of the high pressure cylinder. Steam lubricators are made in various forms, some having a positive feed by a pumping arrangement, while in others the oil floats upon water in the body of the lubricator to which steam is admitted; the condensation of the steam increases the quantity of water and causes the floating oil to overflow and feed through a pipe leading into the steam pipe or steam chest, as the case may be. Cooling the impermeator causes more rapid condensation, and increases the amount of oil fed to the steam.

Cylinder escape or relief valves do not let all the water out of the cylinder because of the clearance,* hence the amount of water left in will equal the amount of clearance.

The small cylinders on top of the steam chest are for the purpose of guiding the upper ends of the valve spindles, and are fitted with pistons having steam beneath, the upper end being in communication with the condenser.

The effort of the piston to rise supports the weight of the valves and valve gear.

The valves of a marine engine that are worked by hand are, the stop valves for letting on steam from the boiler, the safety valve, which is lifted to see that it is in proper working order, the Kingston valve for letting in the circulating water, the blow through or starting valve for warming the cylinders and starting the engines. The valve for adjusting the rate of boiler feed has its lift adjusting screw operated by hand. The slide valve may also be operated by hand before the engine is started, or it may be operated by a steam reversing gear. The expansion valves are also set by hand to regulate the point of cut off or amount of expansion. The valves that are operated automatically, or from the motion of the parts, are the slide and expansion valves, the suction and delivery and check valves of all pumps, the air pump bucket valves, the snifting valves, and the ship's side overboard discharge valves. When the engine is stopped and the steam shut off, close the dampers to check the draught and open the drain cocks on the high pressure cylinders.

If the engine is soon to start and the pressure in the boiler is at the blowing off point, start the boiler feed, if the height of the water in the boiler will permit it, and this is a good time to clean the fires. If the engine is to stop for any length of time, shut off the impermeator and the injection supply.

A vacuum gauge is an instrument for measuring the total or absolute pressure, or pressure above a perfect vacuum, and it is used to indicate the degree of vacuum that exists in the condenser, which, when the various joints about the cylinder and condenser are tight, averages about 27 inches of mercury when the temperature in the hot well is about 100° Fahrenheit.

In round numbers a column of mercury 32 inches high equals the weight of the atmosphere,† hence taking the weight of the atmosphere at sea level to be 15 lbs. per square inch, then each two inches of mercury represents an atmospheric pressure of 1 lb. Suppose then that a bent U shaped tube, each leg of which is 30 inches high, is half filled with mercury, and that one end is in communication with the condenser, and the other end is open to the atmosphere, and if there was a perfect vacuum in the condenser, the pressure of the atmosphere in the open leg would force all the mercury into the leg that communicated with the condenser, hence there would be a column of 30 inches of mercury in one leg, and air in the other.

If there was in the condenser a pressure of 1½ pounds per square inch above a perfect vacuum, the mercury would stand 27 inches high in one leg, and 3 inches in the other, and so on, hence from the height of the column of mercury above its natural level the degree of vacuum in the condenser may be known. But the pressure of the atmosphere varies with its temperature, and the weight of mercury also varies with its temperature.

To find the total pressure in the condenser, therefore, we subtract height of the column of mercury given by the condenser from the height of the column in the barometer, and divide the remainder by 2.

Examples.—The barometer stands at 29.5 and the vacuum gauge at 26, what is the absolute pressure in the condenser?

Here,

$$29.5 - 26 = 3.5 \div 2 = 1.75$$

Answer, $1\frac{75}{100}$ lbs. per square inch.

A dial vacuum gauge of the Bourdon construction is similar to the Bourdon steam gauge, that is used upon the boiler, except that the inside of the elliptical tube is in communication with the condenser and the atmospheric pressure bends the tube into a curve of smaller radius (instead of to a larger one, as in the case of the steam gauge).

Obviously, therefore, the zero of the dial vacuum gauge is atmospheric pressure.

Suppose the dial vacuum gauge shows 10 lbs., the steam gauge 120 lbs., and the barometer 15 lbs., and we may find the total pressure or pressure above vacuum of the steam in the boiler is as follows:

One-half Pressure by steam gauge	= 60 lbs.
A perfect vacuum	= 15 lbs.
Total pressure supposing condenser had a perfect vacuum	= 75 lbs.

To make the correction necessary because there is not a perfect vacuum in the condenser, we then proceed as follows:

Barometer 30 inches of mercury	= 15 lbs. per sq. in.
Dial vacuum gauge	= 10 " " " "
Actual pressure in condenser	= 5 " " "

Then

Total pressure supposing condenser had a perfect vacuum	= 75
Actual pressure in condenser	= 5
Actual pressure of the steam	= 70

Racing means a sudden acceleration of the engine speed, and occurs when the propeller is not fully immersed in the sea, as by reason of the pitching of the ship. Racing augments the strain on the working gear of the pumps, and is likely to lead to accident. It is obviated by the use of a governor or by partly shutting off the steam by hand.

A marine governor is a device for controlling the engine speed, by reducing the supply of steam to the engine cylinder whenever the engine begins to race. The governor is driven by band or rope on the crank shaft. Governors are made in various forms; thus, in one the shaft has a fly wheel and a friction clutch, one half of which is fast on the governor shaft, while between it and the other is a spiral spring which connects the two halves. If the speed accelerates, the sliding half of the clutch is moved along the governor shaft, and by means of links it closes the throttle valve of the main steam pipe, thus wire drawing the steam, reducing its pressure and thereby controlling the engine speed.

A common paddle wheel has a cast iron centre into which the wrought iron arms are set and secured by wrought iron bolts and nuts.

The bolts have hook heads to grip the back of the arm, and receive a nut and plate to secure the paddles.

Paddle wheels are sometimes provided with cast iron floats to act as counterweights to some unbalanced part of the engine. They are mostly required on side lever engines having a single crank; they are placed nearly opposite to the crank, but not quite, so that they may prevent it from stopping on the centre, and be difficult to start again.

Paddle wheels for engines having a single crank sometimes have their floats of varying breadths, so as to keep the speed of revolution as uniform as possible. This is accomplished by making some of the floats wider than the others. The broadest floats

* See page 372, on clearance.

† See "Barometer," Chapter XL.

are in action when the crank is at its points of greatest power, and the narrowest at the time the engine is on a dead centre, hence there are four general graduations of breadth in the circumference of the wheel.

A radial paddle wheel is one in which the floats are fixed to the paddle arms, and their ends are in a line radiating from the centre of the paddle shaft.

A feathering paddle float is pivoted at the centre of its ends, and so arranged that by a mechanical movement it will remain vertical when in the water, notwithstanding the circular path it revolves in.

The object of feathering is to cause the thrust of the float to be as nearly as possible in a horizontal line, and therefore more nearly parallel to the line of the ship's motion, and thus utilize more of the paddle power to drive the ship.

The eccentric for feathering the floats is fixed to the ship's side, and sometimes carries a plummer block or pillow block for the paddle shaft bearing. The centre of the eccentric sheave or wheel is placed ahead of and level with the paddle shaft axis. The working surfaces of a feathering wheel are of brass, and the bushes of the paddle arms of lignum vitæ.

The surfaces are lubricated by the water, but sometimes oil lubrication is provided for the eccentric sheave.

A disconnecting paddle engine is one in which the paddles may be driven separately or together. This is effected at the inner port bearing by a clutch wheel, which slides endways on the shaft and is driven by feathers seated in the shaft. This clutch wheel is operated by a lever so as to engage or disengage with the crank pin, which is fast in the outer crank.

Disconnecting paddle engines are always fitted with loose eccentrics, such engines being used for steam tugs and ferry boats, where quickness of turning and of reversing is of great importance.

The thread of a screw propeller is its length measured along the outer edge of the blade.

The angle of the thread is its angle to the axial line of the propeller shaft.

The length of the thread is the length of the outer or circumferential edge of the blade.

The area is the surface of one side of the blade.

The diameter is the distance apart of the two points on the edges that are diametrically opposite and furthest apart.

The pitch of a propeller is its degree of spirality, and is represented by the distance it would move forward if the water was a solid. It is measured by drawing a line representing the axis of the propeller shaft, and at a right angle to it a line representing in its length the circumference of the circle described by the tips of the blades; from the point of intersection of these two right angle lines a diagonal line is drawn representing the angle the blade at its outer edge stands at the propeller shaft axis. The greatest distance between the diagonal line and the line representing the propeller circumference is the pitch of the propeller.

A left handed propeller has a left hand thread or spiral, and revolves from left to right to move the ship ahead.

A right hand propeller has its blades inclined in the opposite direction, and of course revolves in the opposite direction to a left hand one.

The slip of a propeller is the difference between the distance the ship is moved by the propeller and the distance it would move if the water was solid. Slip is usually expressed in the percentage that the distance the ship actually travels bears to the distance she would have travelled if there had been no slip. From 10 to 20 per cent. is lost in slip.

A screw of increasing pitch is one in which the angle of the face of the propeller blade to the axis of the shaft increases as the thread recedes from the shaft, or from the centre to the circumference of the blade, or in both directions.

In a uniform pitch the angle of the blade to the propeller axis is the same at all distances from the axis.

An example of a screw of uniform pitch would be a piece of angle iron wound around a parallel shaft. If wound on a tape shaft, the largest diameter being nearest to the ship's stern, it would have an increasing pitch. If wound around a parabola, the pitch would vary at every point in its diameter and thread.

A thrust bearing is a journal bearing provided with a number of corrugations or collars fitting with corresponding corrugations or recesses in the thrust block, the area thus provided serving to resist the end thrust placed by the propeller upon the shaft.

It must be freely lubricated by ways leading to each collar or corrugation, and so situated that it is accessible for examination. It is sometimes at the end of the first length of shaft aft of the engine.

A stern tube is a sleeve enveloping the aft end of the propeller shaft to protect it from the sea water, which would corrode it. At the aft end of the stern tube is a gland and stuffing box. At the inner end, which extends to the aft bulkhead, it has a flange which is bolted to the bulkhead.

The bearing area of the shaft and stern tube are lined with brass (about half an inch thick) to prevent their oxidation from the action of the sea water.

A lignum vitæ bearing is a wooden bearing generally fitted to the outer end of the stern tube in propeller engines, or to the outer ends of the paddle shaft of paddle engines. It consists of strips of lignum vitæ dovetailed into the bearing or bush, and running lengthwways of it. These strips are prevented from working out by a check plate at each end of the bearing.

Screw propellers may be fastened to their shafts in several ways, as by a key or feather sunk in the shaft, and projecting into a keyway in the propeller bore, and a nut on the end of the shaft with a safety pin outside the nut, or by a key passing through the boss of the propeller, and a safety pin or plate upon the key.

The principal pipes of a marine engine and boiler, and the parts they connect, are, the main steam pipe, connecting the stop valve on the superheater to the steam chest of the engine cylinders; the waste steam pipe from the safety valve to the open air; the blow-off pipe, connecting the blow-off cocks on the bottom of the boiler with the blow-off Kingston cock on the ship's side; cylinder jacket pipe from the stop cock on the boiler to the steam jacket.

The circulating suction pipe, connecting the main Kingston valve with the bottom of the circulating pump; the circulating delivery pipe, connecting the discharge compartment of the condenser with the main delivery valve on the ship's skin; the air pump suction, connecting the body of the condenser with the suction side or bottom of the air pump; the main exhaust pipe, connecting the exhaust passage of the low pressure cylinder with the condenser; the feed water suction pipe, connecting the donkey feed pipe with the hot well; the feed water delivery pipe, connecting the donkey feed pump with the check valve on the boiler; the bilge suction pipe, connecting a strum box in the bilge with the bilge pump; a suction pipe from the strum in the bilge to the donkey pump; the bilge pump delivery pipe, connecting the bilge pumps with bilge delivery valves on the ship's side.

A mud box is a rectangular box usually placed in the engine room, and serving to clear the bilge water from foreign substances, as small pieces of wood, coal, etc.; the construction is as follows: It is on the suction side of the bilge pumps, and is provided with a hinged lid that affords access to clean it out, and that must obviously close air tight, or the bilge pumps will not draw. The box is divided into two compartments by a loose division plate that stands vertical, and is perforated so as to act as a strainer.

The steam from the boiler passes through the superheater, main stop cock or valve, main steam pipe, separator, regulating and throttle valve, steam chest, steam port, steam passage into cylinder, returns through steam passage and port, exhaust cavity of valve into either the condenser or the low pressure cylinder, as the case may be, finally exhausting into condenser, whence the water of condensation is pumped by the air pump into the hot well. In the case of a jet condenser part only of the condensed steam goes back to the boiler, the rest going into the sea through the injection discharge pipe.

A steam jacket * is an outer casing to a steam cylinder, the space between it and the cylinder being filled with steam direct from the boiler, with the object of preventing condensation of the steam in the engine cylinder.

* See page 374 on steam jackets.

A drain cock is supplied to the bottom of the jacket to pass off condensed water. Steam jackets should be lagged or felted to prevent condensation.

The parts of an engine that require to be felted or lagged are the cylinders and the steam pipes ; the boilers also should be felted or otherwise covered to prevent loss of heat by radiation, and the uptake protected by means of thin plates, kept, by means of distance pieces and bolts, at a distance of two or three inches from the plates of the uptake.

Various non conducting substances are employed to prevent radiation, as, for example, felt, mineral wool, asbestos, and various kinds of cement.

The pieces of the engine through which the steam pressure is received and transmitted are as follows :

The piston, piston rod, cross head, cross head gudgeon, connecting rod, crank pin, crank shaft and couplings to the propeller shaft.

Trunk engines are generally used in war vessels where it is required to have the engines below the water line. The trunk passes through the cylinder and the piston is upon the trunk, the connecting rod passes down into the trunk and connects direct to the piston. A stuffing box and gland in each cylinder cover keeps the trunk steam tight. The trunk forms a guide to the piston in place of the ordinary cross head and guides, and thus saves the room required by those parts.

The cylinders for a right handed propeller should be on the starboard side of the vessel, so that the pressure on the piston, when the engine is going ahead, shall be in a direction to lift the trunk in the cylinder, and thus act to relieve the gland and cylinder bore of the weight of the trunk and piston.

An oscillating engine is one in which the cylinder is mounted on bearings called trunnions, so that the cylinder can swing and keep its bore and the piston pointing to the crank at all parts of the engine revolution. This enables the connecting rod and slide bars to be dispensed with. The trunnions are hollow, one containing the steam and the other the exhaust passage.

Oscillating engines are used for paddle steamers, because their construction permits of a good length of piston stroke, while still keeping the engine low down in the vessel.

The valve motion for an oscillating engine consists of an ordinary eccentric gear or motion, with the addition of various mechanical arrangements to accommodate the valve gear to the vibrating motion of the valve chest.

The stuffing box of an oscillating engine is made deeper than usual because the gland bore has more strain on it, and extra wearing surface is therefore required to prevent its wearing oval.

Geared engines are those with gear wheels to increase the revolutions of the shaft above those of the engine, and thus obtain a high propeller speed without a high piston speed.

The pressure that propels a vessel is taken by the thrust block in a screw propeller engine.

The pressure that drives a paddle steamer is applied to the hull at the shaft bearings and their holding beams, and to the bed plates. The amount of fuel required per horse power per hour, by modern compound engines, is from about 1½ to 3 lbs., and by common condensing engines from 3 to 5 lbs. per horse power per hour.

The unit or measure of a horse power is the amount of power required to lift 33,000 lbs. one foot high in a minute.*

Nominal horse power is a term used to represent the commercial rating or power of an engine, and is usually based upon the area of the piston. It gives no measure of the engine power, however, because it does not take the piston speed into account.†

In a surface condensing engine the duty of the air pump is to merely pump the condensed steam and vapor from the condenser to the hot well, whereas in a jet condensing engine it has to also take the condensing water from the condenser, hence an air pump for a surface condenser may be made smaller than that for a jet condenser. As the air pump works against the pressure of the atmosphere, therefore the smaller it is the less of the engine power is absorbed in working it.

* See page 407, Vol. II.
† See page 374, Vol. II.

The injection cocks are regulated for opening by rods having handles attached. If the injection cocks are not open wide enough, the condenser will get hot and impair the vacuum, while if opened too wide, the water in the hot well will be cold and the boiler feed will be cold. These cocks should be so regulated as to keep the temperature in the hot well at about 100° Fahrenheit.

The parts of a marine engine that are exposed to danger in a cold climate are all pipes through which cold water circulates, and are liable to freeze.

The precautions necessary to prevent freezing in cold climates are to cover all pipes liable to freeze, to keep the water circulating through them, or to let it out of them if necessary, as in the case of the engine standing.

A marine engine may fail to start, or may be prevented from starting by the following causes :

1st. The H. P. slide valve may be off, or away from its seat, thus admitting the steam to both sides of the piston at the same time.

2d. The engineer may have forgotten to disengage the hand turning gear from the crank shaft.

3d. The propeller may be fouled with a piece of timber, or by a chain or rope (these causes sometimes occurring when the ship is in port), or there may be something wrong with the outer bearing of the propeller shaft.

4th. In the case of a propeller fitted with a banjo frame (for the purpose of raising the propeller) the propeller may be locked.

5th. An obstruction, as a block of wood, in the crank pit may prevent the crank from turning.

6th. The slide valve nut may have slackened back, thus loosening the slide valve.

7th. The slide valve spindle may have broken.

8th. When an engine has no auxiliary or starting, but an *impulse* valve that merely lets a puff of steam into the receiver, this impulse valve may leak, and if the escape or relief valve on the receiver is too much loaded, it may gag the H. P. piston by giving it high pressure steam on both sides, and this may throw the valve off its seat. Similarly, if the engine has an auxiliary or starting valve, and it leaks, high pressure steam may be admitted to both sides of the L. P. piston, thus gagging it and causing its slide valve to throw back and away from its seat.

9th. The cylinders may be choked with water, and the drain cocks choked up.

10th. The crank shaft bearings may be screwed up too tightly.

11th. The air or the circulating pump may be choked with water, either the air pump overflow valve or the circulating discharge valve being secured down.*

12th. From the engines being allowed to stand a long time in one position, and the glands being too tightly packed. An engine should be turned a little daily when not in use.

13th. From the piston rings being set out too tight to the cylinder bore.

14th. From the throttle or stop valve being shut, as from its spindle being broken.

15th. From the eccentric sheave, or wheel, having shifted on the shaft, some eccentrics having a key that is not sunk in the sheave, which is done so that the eccentric may shift rather than break if it should seize in its strap.

16th. From the H. P. piston leaking badly, or its ring being

* The air pump overflow valve should never be permanently fastened down. More engines have been broken down from this than from almost any other neglectful cause, because, from great leaks in the condenser tubes and engines standing for a length of time, a larger quantity of water may require to be got rid of during the first few strokes of the pump than can pass through the small air or vapor pipe, which is usually fitted from the hot well either into the bilge or else overboard. Unless the valve in this overflow pipe is heavy enough of itself (which is very rarely the case), it should be loaded by a spring or weight, so that when the puff of the air pump causes it to lift, and the vessel is rolling, sea water may not pass into the hot well. To avoid this, some engineers erroneously fasten this valve down. An experienced engineer states that in his experience five engines have been broken down from this cause alone.

broken, which will permit the cylinder to fill with steam and the slide valve to unseat.

17th. If the engine has been overhauled, the forward eccentric may have been connected to the wrong end of the link, thus giving an improper motion to the slide valve.

18th. The expansion may be set to cut off too early in the stroke.

19th. From the air pump rod, or from the circulating pump rod being broken, or from the valves being broken.

20th. From the cylinder casing or the receiver being cracked so as to admit steam to both sides of the piston at the same time.

A defective vacuum, or loss of vacuum, may occur from the following causes:

1st. From the glands of the low pressure cylinder leaking.

2d. From the pet cock of the air pump being left open.

3d. From the joints of the connections about the condenser leaking.*

4th. From the condenser being cracked, and therefore leaky.

5th. From the injection cock or valve being closed.

6th. From the condenser tubes being foul for lack of being cleaned. From the L. P. cylinder escape valves or cylinder cocks being leaky, and therefore letting in air.

7th. From the slide valve and piston of the L. P. cylinder leaking.

8th. From the air pump valve being leaky or broken. From the circulating pump being defective, as from having leaky valves.

9th. From the Kingston injection valve not being properly opened, or from its outside orifice being choked.

10th. The bilge injection may be so connected with the air pump or condenser as to impair the vacuum when its valve is accidentally stuck and its stop cock is left open.†

The principal causes of heating are:

1st. The bearing caps being screwed down too tight.

2d. The bearings being left uncovered, thus allowing the brick dust used for cleaning the machinery, the dirt from coaling the ship, or the sand used for cleaning the decks, to get into the bearing.

3d. The oil grooves in the brasses being worn out or too shallow, or the brasses not being cleared at the sides.

4th. Improper fitting of the distance pieces or fit strips between the brasses.

5th. Bad oil or too light an oil.

6th. If the brasses are too slack and thump or pound, the back of the brass may be stretched by pening, causing the sides of the brass to close in upon and bind the crank journal or crank pin, and this will cause heating.

For other information concerning the engine see as follows:

	Page.
Angularity of connecting rod	375
The slide valve	376
Double ported and griddle valves	377
Balanced valves	377
Piston valves	378
Separate cut off valves	378
Reversing gears	383
Finding the working results of a slide valve	376
Condensing engines	442, 444
Calculations on the mechanical powers	405
The unit of power	407
Calculating horse power	407
Calculations of safety valves	409
Heat, water, and steam	410
The expansion of steam	411
The conversion of heat into work	411
The indicator	413
Indicator diagrams	414, 421
The barometer	415
Calculating the horse power from indicator diagrams	419
Finding the steam of water consumption from an indicator	421

* To discover a leak about a condenser, pass an exposed light, as a candle, about the joints, etc., and where there is a leak the flame will be drawn in towards the condenser.

† It is obvious that a defective vacuum may or may not prevent an engine from starting, according to the degree of defectiveness.

Figs. 3405 and 3406 represent a triple expansion marine engine, the construction being as follows:

The high pressure cylinder has a piston valve and the intermediate and low pressure cylinders flat valves. Each cylinder has a link motion, and all three link motions are shifted from the same shaft, which is moved by a steam reversing gear. At *a*, Fig. 3405, are the eccentrics for the link B, for the high pressure cylinder; *b'*, *b'* are those for link B', for the intermediate cylinder; and *c' c'* are those for the link C', for the low pressure cylinder. From each link are rods E, Fig. 3406, connected to arms on the shaft F *f*, to an arm on which is connected the rod G, from the worm wheel H, whose actuating worm I is on a crank shaft operated by the small steam cylinder J. The slide spindles D work in guides, and their cross heads C span the edges of the links, gibs being provided to take up the wear.

The gear for turning the engine when there is no steam in the main boilers is constructed as follows:

On the shaft of the wheel *m*, Fig. 3405, is a worm *n* operating a worm wheel *p*, on whose shaft is a worm which operates the large worm wheel shown on the main crank shaft.

Figs. 3407 and 3408 represent the compound engines of the steamship *Poplar*, concerning which *The Engineer* (from which the engravings are taken) says:

"Both the cylinders of these engines are fitted with piston valves, placed at the back of the cylinders and worked by the single eccentric valve gear, which has been so largely adopted and so successfully carried out by this firm in triple expansion as well as compound engines. It will be noticed that whilst this valve gear permits of the cylinders being close together, it allows of the crank shaft being made in two similar pieces, and affords exceptionally long main and crank pin bearings, of the former of which there are only three, instead of the usual four. In the case of the *Poplar* the cylinders are 29 in. and 55 in. in diameter and 33 in. stroke, and the crank pins are 11 in. long, whilst the centre main bearing, which does duty for both the engines, is 23¾ in. in length, each of the outer bearings being 18 in. in length, the diameter of the crank shaft being 9½ in. Another very interesting feature about these compact little engines is the design of the front framework. Instead of the ordinary upright columns in front of each engine there is an arrangement which gives exceptional stiffness to the whole structure whilst affording the fullest possible accessibility to the main working parts, and which has the appearance of an arch, from the shoulders of which there are branches worked up to receive the feet of the cylinders, thus accommodating the close centres and providing for the support of the reversing wheel without in the least obstructing the gear below. The condenser is divided horizontally through the centre on a plan strongly advocated by the builders, the whole of the base of the engines being cast in one piece and made level on the under side, so as to enable it to receive support from, and be bolted to, the engine seating immediately beneath the crank shaft, as well as round the margin."

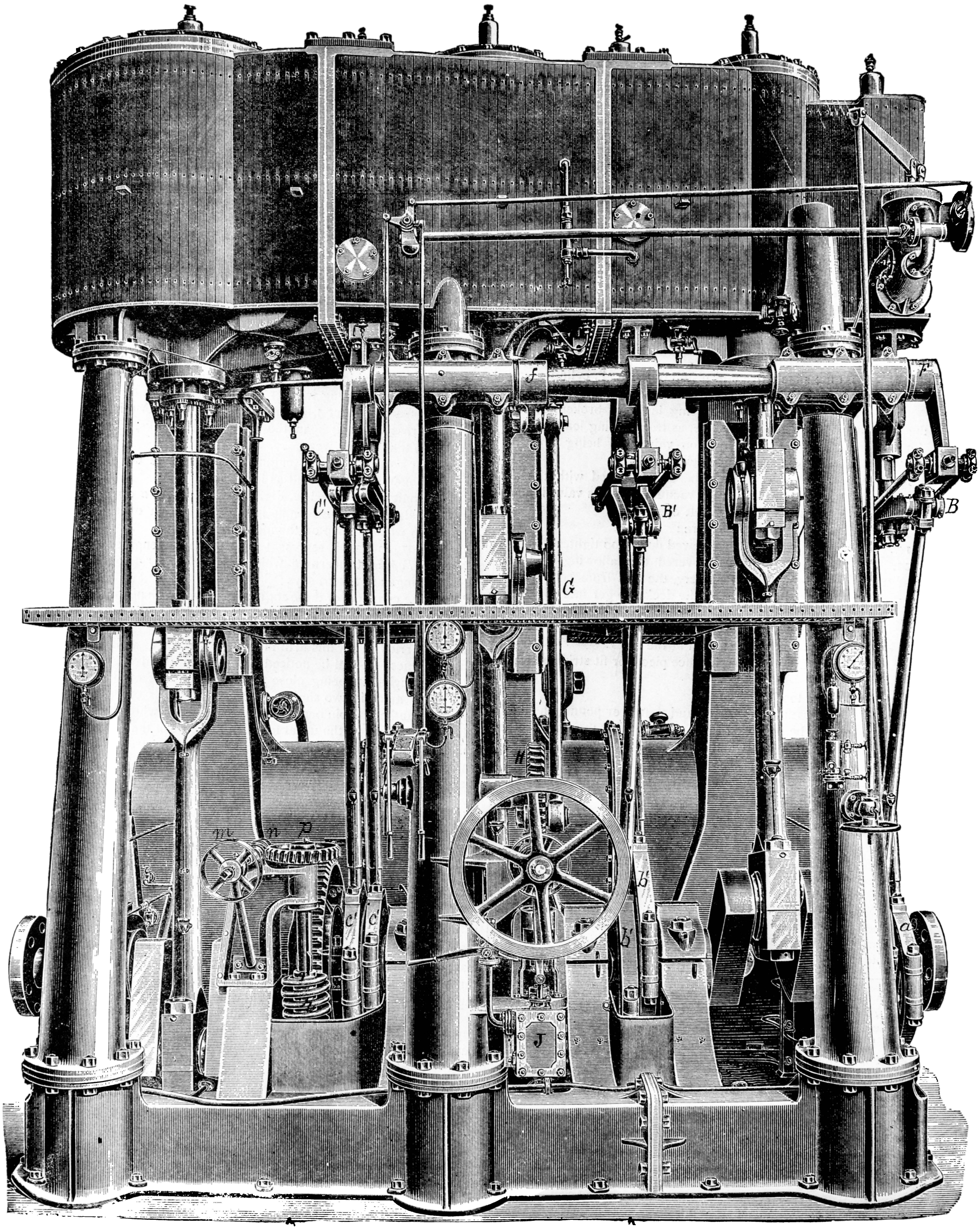

Fig. 3405.

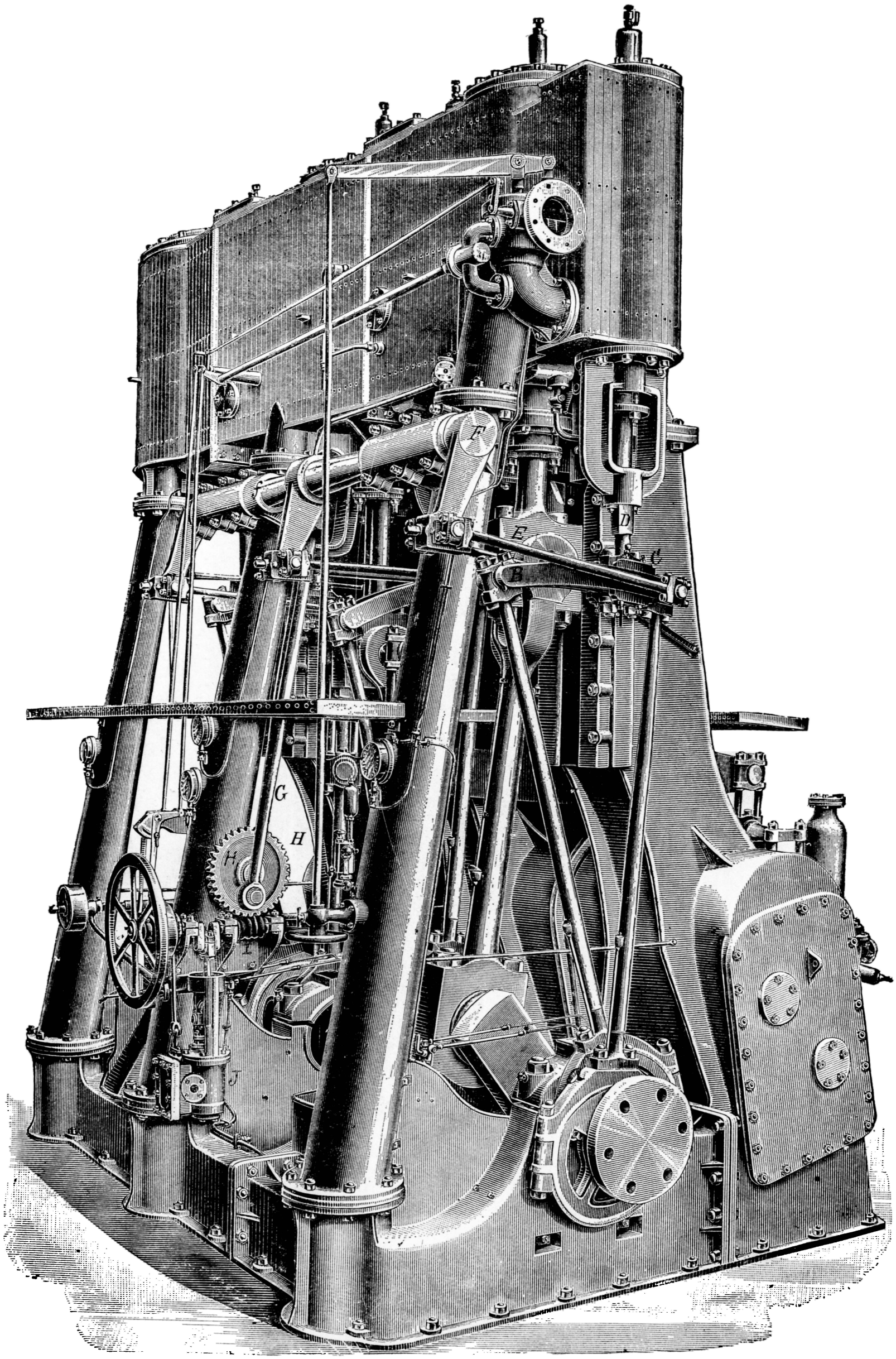

Fig. 3406.

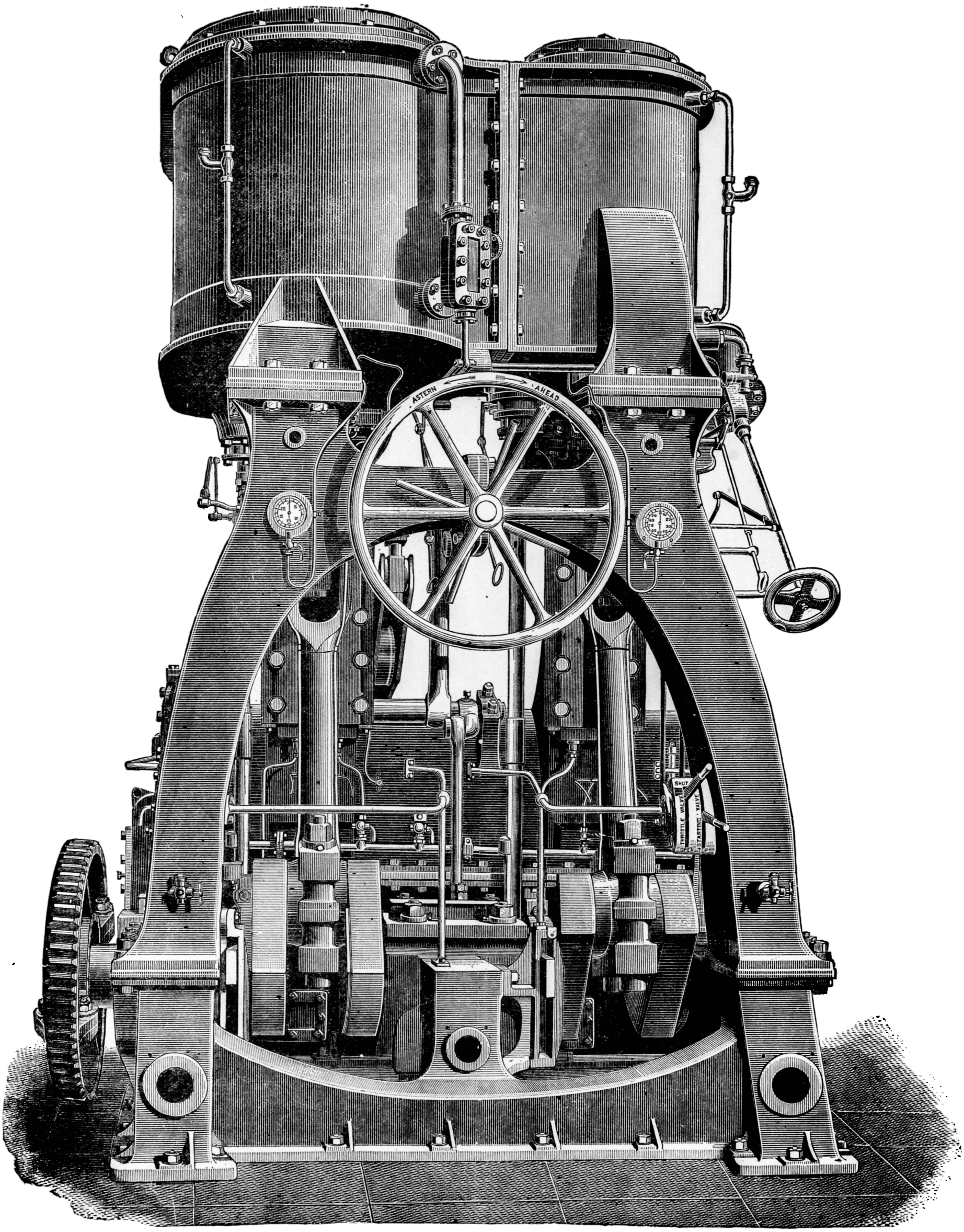
ASTERN
AHEAD
SHUT
THROTTLE VALVE
STARTING VALVE
OPEN

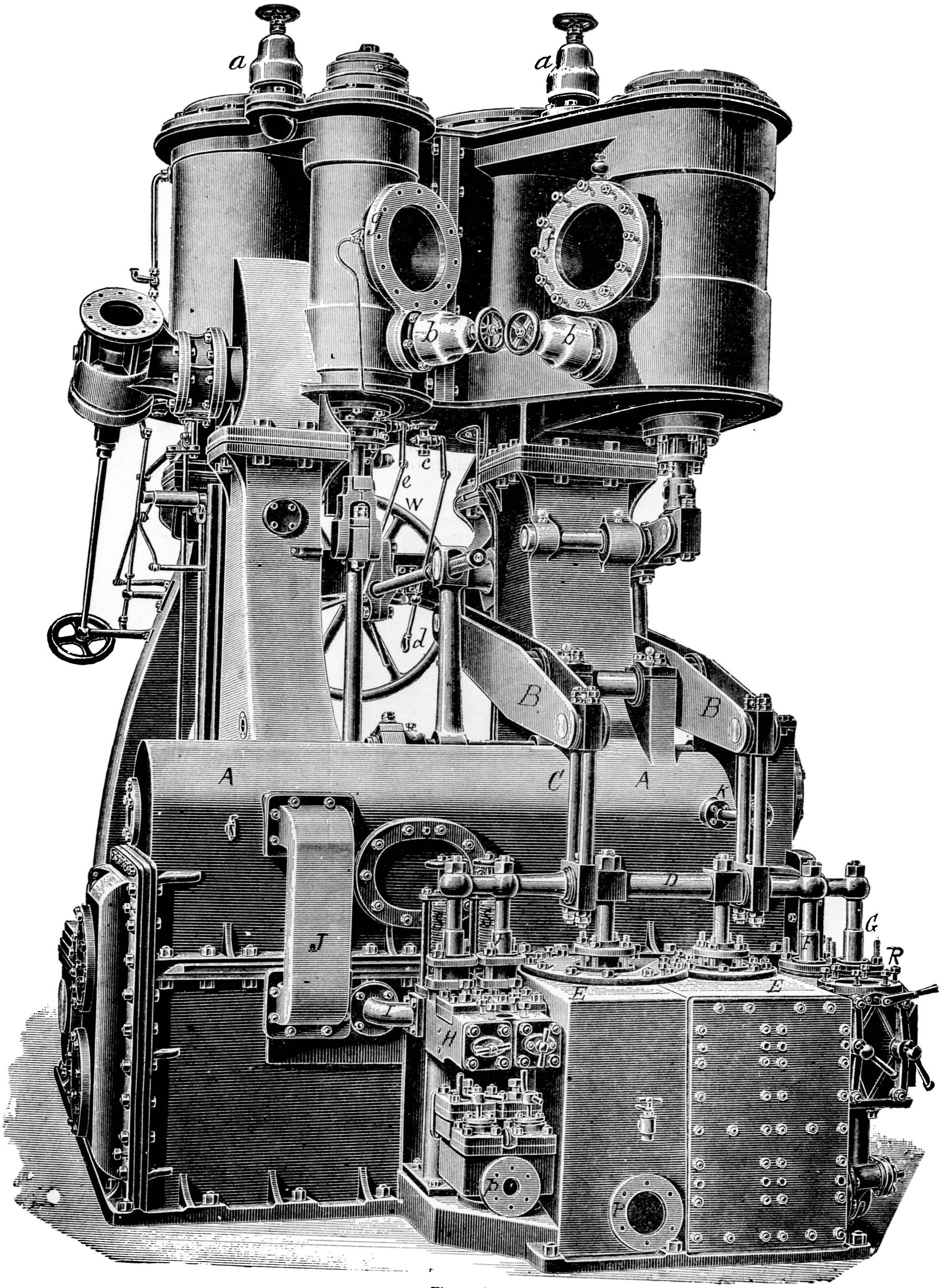

Fig. 3408.

Chapter XLI.—MARINE BOILERS.

BOILERS for marine engines are, in England, made of special qualities of plate, the best being termed Yorkshire, and a nearly equal grade, Staffordshire. The plates for the shell, the furnace bottoms and the gusset stays are made of Staffordshire, while the tube plates, furnace tops, and such parts as require to be flanged and are subject to more intense heat, are made of Yorkshire plate, which has more ductility.

In the United States the grades of iron used for boilers are C H No. 1 S, or charcoal hammered No. 1 shell iron, for the shell, and C H No. 1 F, or charcoal No. 1 flange iron, which is used for the furnaces and such parts as require flanging.

In both countries steel is also used for boilers, except for the tubes, for which it is not entirely reliable if very high pressures are to be used.

Both the iron and steel plates are tested for tensile strength and ductility.

The breaking strain is that which is sufficient to cause rupture, while the *proof strain* is that which the metal is required to withstand with safety.

The safe working strain, or working pressure, W P, is the strain under which it is considered safe to work the boiler.

The strength of a boiler of a given diameter and thickness of plate varies according to the construction of the riveted seams or joints.

Boiler stays or braces are rods, ribs, or plates for supporting the weaker parts of the boiler. Thus the tube plates may be stayed by rods passing through both plates and screwed into them, or nuts and washers may be used on the stays one on each side of each tube plate.

Gusset stays are iron plates which are riveted to T irons or in some cases to L irons, which are riveted on the surfaces to be stayed.

Stay tubes are thick tubes (usually about $\frac{3}{16}$ inch thick), which screw into the tube sheets and are riveted over at the ends. A superior construction, however, is to provide nuts and washers to the ends of the stay tubes, one on each side of each tube plate.

Boiler stays are usually made of such diameters that when new they will sustain a tensile strain of not more than 5,000 lbs. per square inch of cross section, this being the rule of the Board of Trade.

Stays are sometimes screwed into the tube plates and then riveted over at the outside ends. A better method, however, is to let the ends of the stays receive a nut on each side of each tube plate.

Boiler tubes are secured in their tube plates by being *expanded* in. This may be done by driving in a taper steel mandrel, and then clinching them over, or by using a tube expander. There are two principal kinds of tube expanders, in one of which small rolls travel around the bore of the tube and expand it, while in the other a number of segments, held together by a spring, are forced outwards by a mandrel driven in by hammer blows.

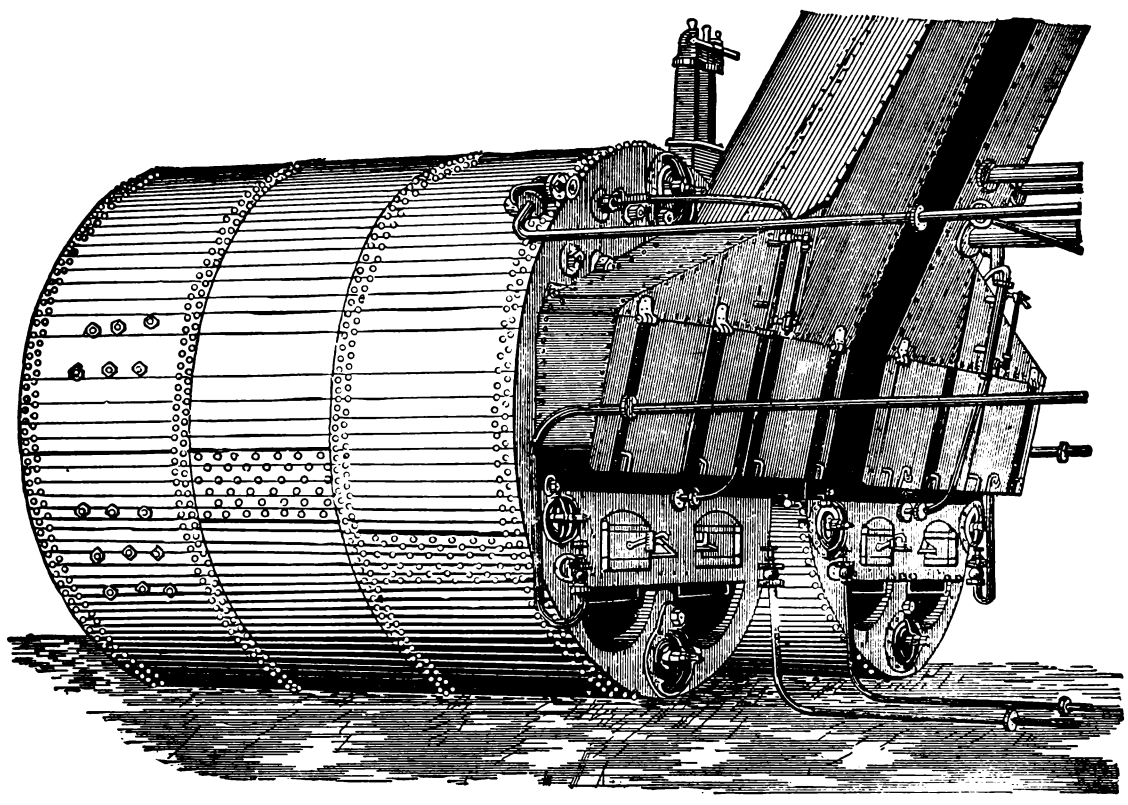

Fig. 3409.

Too much expanding is apt to weaken the tube close to the inside face of the tube sheet.

Boiler tubes leak first at the end which receives the greatest heat from the fire, the leakage being caused by the expansion and contraction of the tube, which is obviously hotter than the water which causes the tube to expand more than the boiler shell. The remedy is to re-mandrel or expand the tube.

The scale that forms on the face of the tube sheet keeps the water away from contact with the plate, which with an undue thickness of scale will crack between the tube holes.

A tube that is split or that cannot be made steam tight by being re-mandrelled or expanded is plugged up at each end by means of either wooden or iron plugs. The best plan, however, is to use iron discs having a stepped diameter, so that one end will fit the bore of the tube, and the other will form a shoulder that will cover the end of the tube.

Each disc has a hole through its centre, so that a wrought iron rod or bolt may be passed through the hole and receive a nut at each end. Beneath the flange of each disc, a grummet of spun yarn and white lead is placed, so as to make a steam tight joint when the nuts are screwed home. This stays the tube plates as well as stopping the leaky tube.

If wooden plugs are used, they are made a driving fit in the tube bore, and driven through until they have passed the split, and a second wooden plug is driven tightly from the same end of the tube.

The up take of a marine boiler is the casing or passage way through which the heat and gases pass after leaving the boiler. A dry up take is one which is outside of the boiler, as in Fig. 3409, which represents an outside view of a boiler such as shown in Figs. 3410 and 3411.

A wet up take is one which passes through the boiler, and therefore has fire on one side and steam on the other. It is therefore under a collapsing pressure.

The furnace of a marine boiler extends from the fire door to the combustion chamber (*i. e.*, the box in which the heat of the furnace passes before returning through the tubes).

The superheater of a marine boiler is a cylindrical vessel receiving the steam from the boiler, and delivering it to the main steam pipe, whence the steam is delivered to the engines, etc. When it has no connection with the up take, it may, however, be more properly termed a steam driver, since it serves to separate the steam from entrained water, and does not superheat the steam.

In some cases, however, the superheater takes the form of a spherical ended cylinder standing in the up take.

The receiver of a marine boiler is a drum or cylinder that receives the steam from the boiler and from which the steam passes through the steam pipe to the engine. The receiver is by some called the *steam chest* of the boiler.

The fittings essential for a marine boiler are: The safety valves; the test cocks (or gauge cocks, as they are sometimes termed); the water gauge glass; the stop valves; the check valve for the boiler feed pipe, and the valves for letting on steam to the main engine and such other engine or engines as may take steam from the main boiler; the scum cocks; the blow off cocks; and a small cock to enable the drawing of water from the boiler to test its degree of saltness.

There are two kinds of safety valves, the dead weight and the spring loaded.

A dead weight safety valve is one in which the valve is held to its seat by dead weight, the objection to which is, that when the vessel rolls the effect of the weight or weights upon the valve is diminished; hence under heavy rolling the steam may blow off at a less pressure than the valve is set for.

A lock up safety valve is a dead weight safety valve, the top of whose spindle is provided with a cast iron cap or bonnet with two handles on. This cap is keyed to the spindle, and the keyway is so disposed that no extra weight can be added to the valve, while at the same time the valve can be lifted from its seat and turned around.

A spring loaded safety valve is one in which the valve is held down by the pressure of a spiral spring, and this pressure will obviously not vary, no matter how much the ship rolls.

In proportion as the valve lifts and the spring compresses, its resistance increases, and this tends to impair the accuracy of the valve. This, however, is offset from the fact that when the valve rises from its seat it presents a greater area for the steam to act against.

The area of safety valve required by the English Board of Trade is about ½ square inch of valve area per square foot of fire grate area.*

There are three test cocks, which are sometimes placed in a diagonal row on the front of the boiler, and sometimes on the fitting for the gauge glass. The top test cock shows highest level to which the water should rise in the boiler, and the lowest one the lowest level, the middle cock indicating the average. There is usually a vertical distance of about 4 inches between the test cocks, which gives a permissible range of 8 inches in the level of the water in the boiler.

Test cocks are prevented from choking with scale by passing a wire through the cock and clear into the boiler, a plug being provided, which, when removed by unscrewing, permits the insertion of the wire.

This cleaning must obviously be performed when there is no steam on the boiler.

A gauge glass is a glass tube whose bore is open to the boiler. It is fitted at each end to a brass socket that is screwed into the boiler, each socket having a cock that permits communication between the gauge glass and the boiler to be shut off in case the glass should break. The bottom socket is also fitted with a cock, which, on being opened, permits the water and steam to blow through the gauge glass and clean it of scum or dirt.

The gauge glass must be plainly in sight, and placed at such a height that when the desired quantity of water is in the boiler it will half fill the gauge glass.

Glass water gauges, instead of attaching to the boiler, are sometimes fitted to a fitting that connects to the top and bottom of the boiler, with the object of attaining, for the gauge glass, water free from the scum and impurities which collect at and near the surface of the water in the boiler. This fitting should have cocks in each pipe leading to the boiler, so that in case the gauge glass breaks, steam can be shut off from the boiler.

In some cases the test cocks are also attached to this fitting, and in this case the construction should be such that shutting off communication between the gauge glass and the boiler will not at the same time shut off communication between the test cocks and the boiler.

When the boiler is priming or steaming very fast, the gauge glass may show a false water level, hence reading should be compared with that of the test cocks.

If the water gets too low, the first parts of the boiler to be injured will be the top of the flame box, or the combustion chamber, and the top row of tubes, because they are the first surfaces that the water will fall below and leave exposed to the heat without having water on the other side.*

The pressure in the boiler is shown by a steam gauge, pressure gauge, or dial gauge as it is promiscuously called.

A Bourdon dial gauge or pressure gauge consists of a dial casing, containing a hollow thin brass hoop, oval in cross section, which receives steam from the boiler.

This hoop is fixed at one end, while the other end is closed and free to move. The free end is connected by a small link to a toothed sector, which gears or engages with a small pinion fast upon the spindle of the pointer or needle. When the steam is admitted into the hoop, it straightens out or expands in diameter to an amount that is proportionate to the amount of the pressure within the hoop, and thus causes the needle or index pointer to revolve, and denote from the markings or readings of a dial plate the amount of pressure within the hoop.

If the pressure within the hoop is released, it will move to its normal or zero position. In the course of time, however, the hoop is apt to get a slight permanent set and not indicate correctly. It may, however, be approximately tested for accuracy by testing its readings with that of the safety valve.

The working parts of the gauge, and its casings also, are made of brass, so that they shall not corrode, and to prevent the heat of the steam from permeating the gauge and impairing the action from expanding the parts, a small quantity of water interposes between the gauge and the steam, the construction being as follows:

Outside the gauge casing the steam pipe is bent into a loop forming an inverted syphon which is to contain the water.

At the lowest point in the bend of the syphon a small cock is inserted, which lets the water out of the leg of the syphon nearest to the boiler, because water in that leg would, from its weight, cause the gauge to show a pressure higher than that in the boiler.

The pressure shown by a steam gauge is that above atmosphere,† and not that above vacuum.

* See page 409, Vol. II. for safety valve calculations.

* See page 370, Vol. II., on low water in boilers.

† See page 367, Vol. II., for remarks on total pressure and pressure by gauge.

The stop valve of a marine boiler is a valve that is opened to let the steam into the main steam pipe.

A blow off cock is a cock employed to blow off, or let all, or a part of, the water out of a boiler. There are generally two, one on the bottom of the boiler, and the other at the ship's side, so that if the pipe was to break or get damaged, the cock at the vessel's side can be closed to keep the sea water out, while that on the boiler may be closed to keep the water and steam in the boiler. These two ends cannot obviously be obtained if one blow off cock only was used.

Blow off cocks are opened and closed by a spanner or key that is removable from the cock, and to prevent the possibility of taking off the spanner or key, before the blow off cock is closed, a spanner guard is employed.

A spanner guard is a cap having a lug or tongue, which projects into the hole in the spanner guard, through which the spanner or key must pass before it can fit on the head of the blow off cock, and the key or spanner has a corresponding recess, so that the spanner or key can only be put on or taken off when the cock is closed.

Blowing off a boiler is emptying it entirely, as for examining the whole interior of the boiler.

Blowing down a boiler is letting out a portion of the water, so as to carry off the loose scale, mud, or sludge that may accumulate on the bottom of the boiler. The mud or sludge would form into scale if allowed to remain.

A scum cock is a cock employed to blow off a portion of the surface water in a boiler, and thus remove the scum, salt, and impurities which float or are thrown up to the surface.

Two scum cocks are employed, one on the side of the boiler, and one on the side of the ship. These two cocks are connected by a pipe. That on the boiler is placed a little below the working level, which is supposed to be (and is kept as nearly as possible) about 9 inches above the top row of tubes.

Sluice valves are doors sliding, water tight, in ways at the entrance to the bulkheads on both sides of the ship. They should be worked from above, in order that they may be shut when the depth of water in the bulk heads might prevent them from being worked from below. These valves should be operated occasionally to ensure that they slide easily and are in working order.

Scale in marine boilers using salt water is composed of sulphate of lime. It is most objectionable on the furnace tops, on the sides and tops of the combustion chamber, on the tubes and on the tube plates. It may be prevented to some extent from forming by a rapid circulation of the water in the boiler, by blowing down the boiler through the scum cocks, by the suspension in the boiler of zinc plates in contact with iron ones, by impregnating the water with chemical antidotes, which maintain the impurities in the form of mud or sludge, and by purifying the feed water. If surface condensers are used, scaling is obviously diminished by feeding as little salt water as possible, which may be done by not getting up a steam pressure high enough to cause the safety valve to blow off, and by preserving the water from the exhausts of the donkey or other engines about the ship.

A thin coating of scale, as say $\frac{1}{32}$ inch thick, may serve as a protection against the chemical action of water that would act to corrode the surfaces, as in the case of harbors receiving the waste waters from chemical works or other impure waters. A thick coating of scale causes the plates to burn on the side receiving the furnace heat, and causes blisters to rise, while at the same time it decreases the value of the heating surface.

Scale on the tubes causes them to expand more, and therefore leak in the tube sheets.

This extra expansion sometimes breaks away the scale at the neck of the tube in the tube sheet and gives access to the water there, and the chemical action of water will in some cases cause the tube to be eaten through close to the tube plate.

Scale is removed mechanically by chisels, scrapers and chipping hammers, which are applied to all the surfaces that can be got at from the inside of the boiler (the man hole affording access to the boiler). After the scale has thus as far as possible been removed, it is washed out of the boiler. The efficiency with which scale may be removed from the tube sheets and tubes depends, to a great extent, upon the facilities the arrangement of the rows of tubes affords in giving access to the scaling chisels.

The salinometer. Salt water is heavier than fresh water, hence the amount of saltiness of water may be known from its density or weight. A salinometer is an instrument that determines from the density of the water the amount of salt contained in the water. It consists of a graduated stem at whose extremity is a weighted bulb which partially sinks the tube in the water ; the depth to which the bulb sinks shows the density of the water.

The reading of a salinometer is taken at the water level, and is read on the tube, which is graduated as follows: The mark furthest from the bulb or highest up the stem is marked 0, and if the zero line is level with the surface of the valve in which the salinometer floats, it indicates fresh water. If salt be added to the fresh water, the salinometer will rise in the water, and when the water contains 1 lb. of salt to 32 lbs. of water (which is the average degree of saltiness of sea water), the line marked $\frac{1}{32}$ on the salinometer tube will be level with the surface of the water. If the saltiness of the water be increased, the salinometer will rise in the water until, at 2 lbs. of salt to 32 lbs. of water, a line (on the tube) marked $\frac{2}{32}$ will be level with the surface of the water. The space between the $\frac{1}{32}$ and $\frac{2}{32}$ is divided into halves and quarters.

As the density of the water varies with its temperature, therefore the readings on the salinometer must agree with some specific temperature, which is usually 200° Fahrenheit, and the reading of the salinometer is correct only when the water is at that temperature. If, however, the water varies a few degrees from the standard of temperature for which the salinometer is marked, a correction of the reading may be made by adding $\frac{1}{8}$ of $\frac{1}{32}$ for each 10 degrees, that the water is hotter, or subtracting the same for each 10 degrees that it is cooler than the temperature at which the salinometer is correct.

The density or specific gravity of ordinary sea water is 1.027 (that of distilled water being unity or 1), and it contains about 4 oz. of salt per imperial gallon.

Tallow is sometimes forced into a boiler fed with salt water to stop priming, by means of a syringe that is screwed into a tallow cock provided upon the boiler below the water level. If the boiler is fed with fresh water, tallow is apt to cause priming.

Angle irons are used in boiler construction to be riveted to plates that require supporting or strengthening, or for gusset stays to be riveted to. Flanged plates are used in the construction of the furnaces, flame, boxes or combustion chambers, boiler ends and tube plates or tube sheets.

Division plates are fitted in some boilers to prevent the water from passing from one side of the boiler to the other when the vessel rolls heavily. This prevents some of the tubes from being left uncovered by water, and thereby getting injured from undue heat.

These division plates are neither steam nor water tight, and stand fore and aft of the ship. Similar division plates are sometimes used, however, to prevent the tops of the combustion boxes from getting overheated from the motion of the ship leaving them uncovered with water, their location being subserved to this end and varying with the position of the boiler.

The superheater of a marine boiler is provided with a safety valve, and sometimes with a pressure gauge to enable the comparing of the steam pressure with that in the boiler, and should also be provided with a gauge glass, to show when heavy priming is going on.

The main stop valve is upon the superheater, as is also the blast pipe.

Priming is a lifting, into the steam space of the boiler, of a part of the water, and may arise from heavy firing, from the safety valve blowing off, from too little steam space, and from other causes.

Priming* often occurs when the boiler feed is changed from salt water to fresh water, or from fresh to salt water.

---

* See page 370 Vol. II., on priming.

A separator or interceptor is a device fitted to either the superheater or to the steam receiver, for separating entrained water from the steam. It consists of a rectangular box or chamber with a partition plate extending from the top half down into the box.

The entering steam strikes the face of the partition plate against which the water collects, and from which it drops to the bottom of the box, while the steam passes under the partition and out at the other side to the engine.

The draught of a boiler is caused by the heat expanding the air and lightening it, thus causing it to ascend. It can be checked by stopping the exit of heated air up the funnel by means of a damper, by checking the flow of cold air into the furnace, by closing the dampers, by opening the furnace doors and letting cold air in the furnaces above the fires.*

A blast pipe is a small pipe leading from the superheater to the funnel, and provided with a stop cock.

It is used for letting a jet of steam up the funnel to promote the draught.

Flame seen at the top of the funnel is caused by the combustion of gases that would have been consumed in the furnace had there been sufficient air or sufficient room for complete combustion. It may be caused in a variety of ways, as insufficient openings between the fire bars, too narrow a space between the bridge wall and the boiler, or too deep a fire upon the bars. It is detrimental, because it obviously wastes fuel.

Dampers are used to regulate the draught in the furnace; they are fitted to the ash-pits or to the funnel, and should be fitted to both, because closing a damper in the funnel sets up a certain amount of pressure in the furnace by holding the heat, whereas dampers at the ash pit doors and none in the funnel lets the heat out and prevents cold air from getting in to promote combustion.

When there are no dampers the furnace doors are open instead, to check the draught; this is, however, highly injurious to the boilers.

The most rapid wasting of the plates of a marine boiler occurs alongside the fire bars, on the furnace tops, at the back of the flame box or combustion chamber, and in those plates generally that receive the most intense heat, and especially when they are heavily coated with scale and are not covered with water.

The scale that forms on the face of the tube sheet keeps the water away from contact with the plate, which, with an undue thickness of scale, will crack between the tube holes.

A tube that is split or that cannot be made steam tight by being re-mandrelled or expanded is plugged up at each end by means of either wooden or iron plugs. The best plan, however, is to use iron discs having a stepped diameter, so that one end will fit the bore of the tube, and the other will form a shoulder that will cover the end of the tube.

Each disc has a hole through its centre, so that a wrought iron rod or bolt may be passed through the hole and receive a nut at each end. Beneath the flange of each disc, a grummet of spun yarn and white lead is placed, so as to make a steam tight joint when the nuts are screwed home. This stays the tube plates as well as stopping the leaky tube.

If wooden plugs are used, they are made a driving fit in the tube bore, and driven through until they have passed the split, and a second wooden plug is driven tightly from the same end of the tube.

Black smoke is an evidence of incomplete or imperfect combustion, and may be, to a great extent, prevented by careful firing, as by feeding gradually and evenly, by the admission of the proper quantity of air, or by a jet of steam admitted above the dead plates.

The furnace bars are ordinarily of cast iron about $1\frac{1}{4}$ inches thick at the top, tapered towards the bottom, and with an air space of from $\frac{1}{2}$ to $\frac{3}{4}$ inch between them.

They require less air space for Welsh than for Newcastle coal, as the latter is the flaming or gaseous coal, and burns the fastest.

The quantity of coal burned in marine boiler furnaces is about 15 lbs. per square foot of fire grate area per hour; hence the quantity burnt per day with common average engines with 4 furnaces, 3 feet wide and 5 feet long, may be found by multiplying the area of the 4 furnaces (60 feet) by the number of lbs. (15) burned per foot of grate per hour, which will give the total lbs. weight burned per hour, which, divided by 112 lbs., will give the hundredweight burned per hour, and this, multiplied by the number of hours reckoned as constituting a day, gives the fuel consumption per day, based upon 15 lbs. coal per square foot of fire grate area.

The number of tons of steam coal burnt per day to drive an ordinary steamer of 40 feet beam 10 knots an hour by steam alone (or without sail), will depend upon the kind of engine used. Experience teaches us that with average vessels, the beam squared equals the consumption of coal for 40 days, in the case of an ordinary jet condenser engine; 50 days with a surface condensing engine; and 60 days with a compound engine; hence, in the present example, assuming the engine to be jet condensing, we may calculate the fuel consumption per day, for a vessel 40 feet beam giving 10 knots an hour, as follows:

The beam squared gives 1600 ($40 \times 40 = 1600$), which divided by 40 (40 days) gives 40 tons per day. For surface condensing the 1600 would be divided by 50, giving 32 tons per day; and for a compound engine the 1600 would be divided by 60, giving 26 tons $13\frac{1}{3}$ cwt. per day.

It is obvious, however, that calculations of this kind, in which the ratio of expansion is not stated, are the merest approximations.

The number of tons of steam coal that will be burnt per day with a pair of average surface condensing engines having cylinders 50 inches in diameter will be, under average conditions, 16 tons per day, the calculations being based upon the common assumption that the diameter of one cylinder squared and divided by 100 gives the consumption of fuel in tons per day for condensing engines not compounded; thus, $40 \times 40 = 1600 \div 100 = 16$ tons of coal burned per day.

Here again, the ratio of expansion not being specified, the calculation has no real practical value.

If at sea and short of coal, bear in mind that the consumption of fuel per mile run is greater for fast than for slow speeds; hence the following points should be attended to:

Reduce the speed of the ship to say half the usual. Regulate the fire so as to keep up full boiler pressure without blowing off. This will allow the expansion or cut off valve to be set to cut off early in the stroke, and thus save steam. If, under these conditions, the steam should sometimes blow off at the safety valve, cover up part of the fire grate area.

Use a thin, rather than a thick, fire, but be careful that it is not so thin as to let currents of cold air pass through.

To Relieve the Boiler in Case of Emergency.—Suppose an engine breaks down at a time when the fires are heavy and going full, that the steam gauge shows blowing off pressure, but that the safety valve is stuck, or from some cause or other is prevented from blowing off, and cannot be eased or lifted, and the following is the course to be pursued:

1st. Close the ash pit dampers and open the smoke box door and fire door. If there are no ash pit doors, close the damper in the up take and open the fire and smoke box doors.

2d. Start the donkey engine to feed cold water into the boilers.

3d. Start the steam winches, and any other small engines that take steam from the main boilers.

4th. Slacken the escape valves, and open the drain cocks of the cylinders and receivers, and steam will blow through the H. P. cylinder escape valve and drain cock at once. The H. P. slide valve may then be worked by hand, back and forth, to let steam pass into the receiver and blow through its escape valves and drain cock.

5th. Open the scum or brine cocks and keep them open, also open all gauge or test cocks, etc., about the boiler.*

* See page 268, Vol. II.

* It is not safe to draw the fire at a time when the pressure is at a dangerous point, especially if heavy, as disturbing it may temporarily increase the combustion and the danger of explosion.

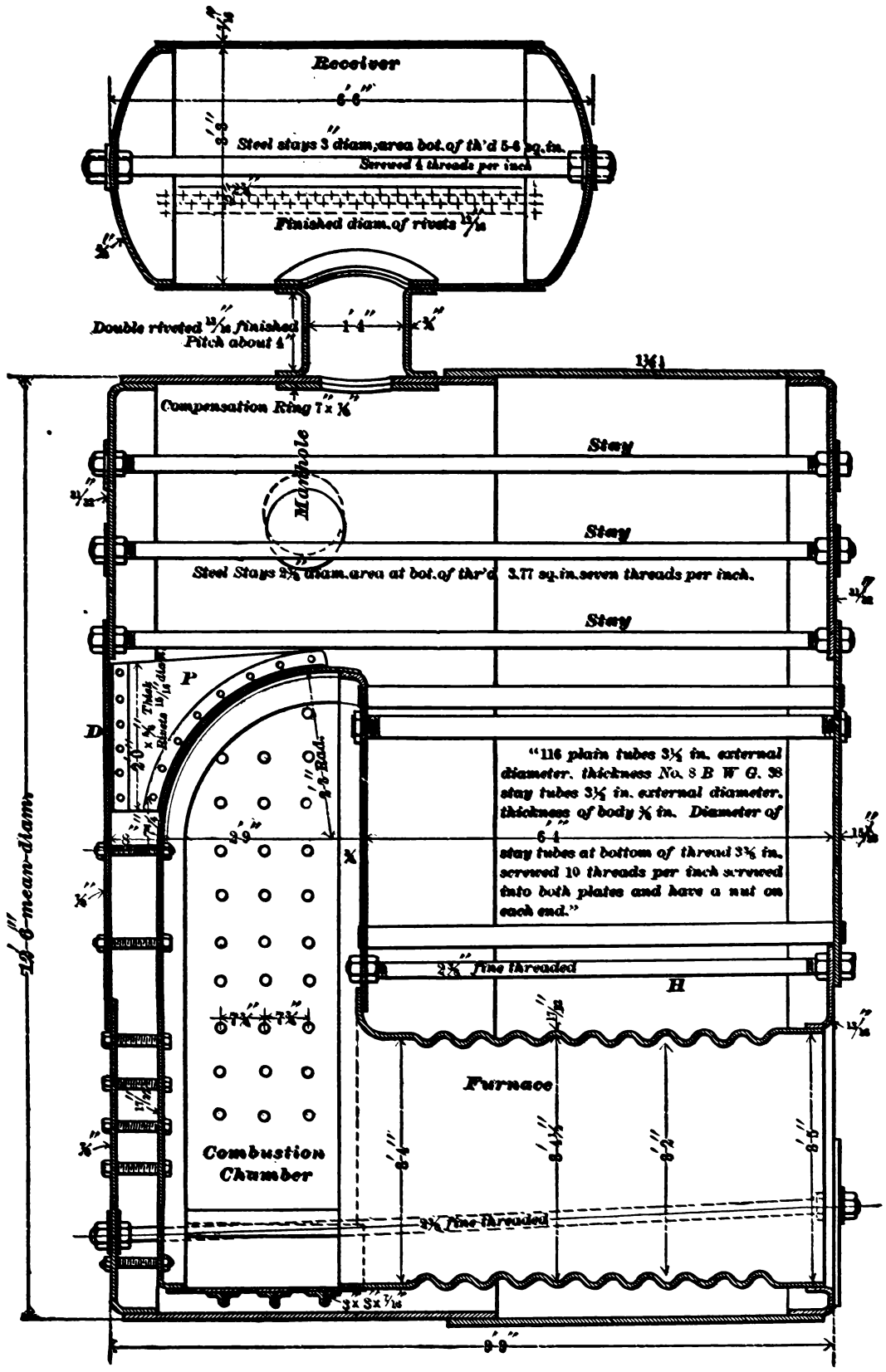

Fig. 3410.

Figs. 3410 and 3411 represent an example of a steel marine boiler, designed for a working pressure of 160 lbs. per square inch, with a margin of safety of 5.

The dimensions are as follows:

Diameter of shell	12 feet 6	inches.	
Shell plate	1 1/8	"	thick.
Front and back upper plates	31/32	"	"
Back rivet plates	7/8	"	"
Back lower plates	7/8	"	"
Front tube plate	15/16	"	"
Front lower plate	13/16	"	"
Furnaces	17/32	"	"
Inner tube plate	3/4	"	"
Combustion chamber back	17/32	"	"
Combustion chamber sides	17/32	"	"
Outer sides of wing combustion chambers	9/16	"	"
And bottom of centre one to be	9/16	"	"
Shell of receiver	7/16	"	"
Beds of receiver	5/8	"	"
Receiver connecting pipe	3/4	"	"

The riveted joints have all holes drilled. The longitudinal seams are made with butt joints treble riveted, and with double butt straps.

The circumferential seams are lapped and treble riveted.

Fig. 3412 represents the "Martin" boiler for marine engines. In the return flue there are a number of vertical water tubes which are very effective in promoting circulation as well as in generating steam. These boilers are used largely in the United States navy for moderate pressures.

The following upon the testing and examining of a boiler of this class is from *Modern Steam Boilers:*

"Every new boiler should, when complete, be tested by water pressure to double the amount of the intended working pressure; for while the wisdom of applying as high a pressure as three times the working pressure, which is sometimes done, may be questionable, experience has shown that a test by hydraulic pressure will reveal defects that would otherwise be apt to pass unnoticed.

"For instance, when the top plate of a combustion box is stayed against the pressure by girder stays that are not stayed to the boiler shell, the girder stay merely acts to stiffen the top plate, and as a result the whole pressure on the area of the top plate falls on the walls of the combustion box. The back tube plate therefore springs down and transfers part of this pressure to the furnace,

causing it to become elliptical, as may generally be found by the application of rod gauges fitted to it before testing and tried while the pressure is on.

"This flattening under test naturally drew attention to the ural shape, pulling the tube sheet back and flattening the furnace. The amount of distortion may be only $\frac{1}{16}$ inch in some cases, but that is sufficient to show the existence of unequal strains which require attention in boiler designing.

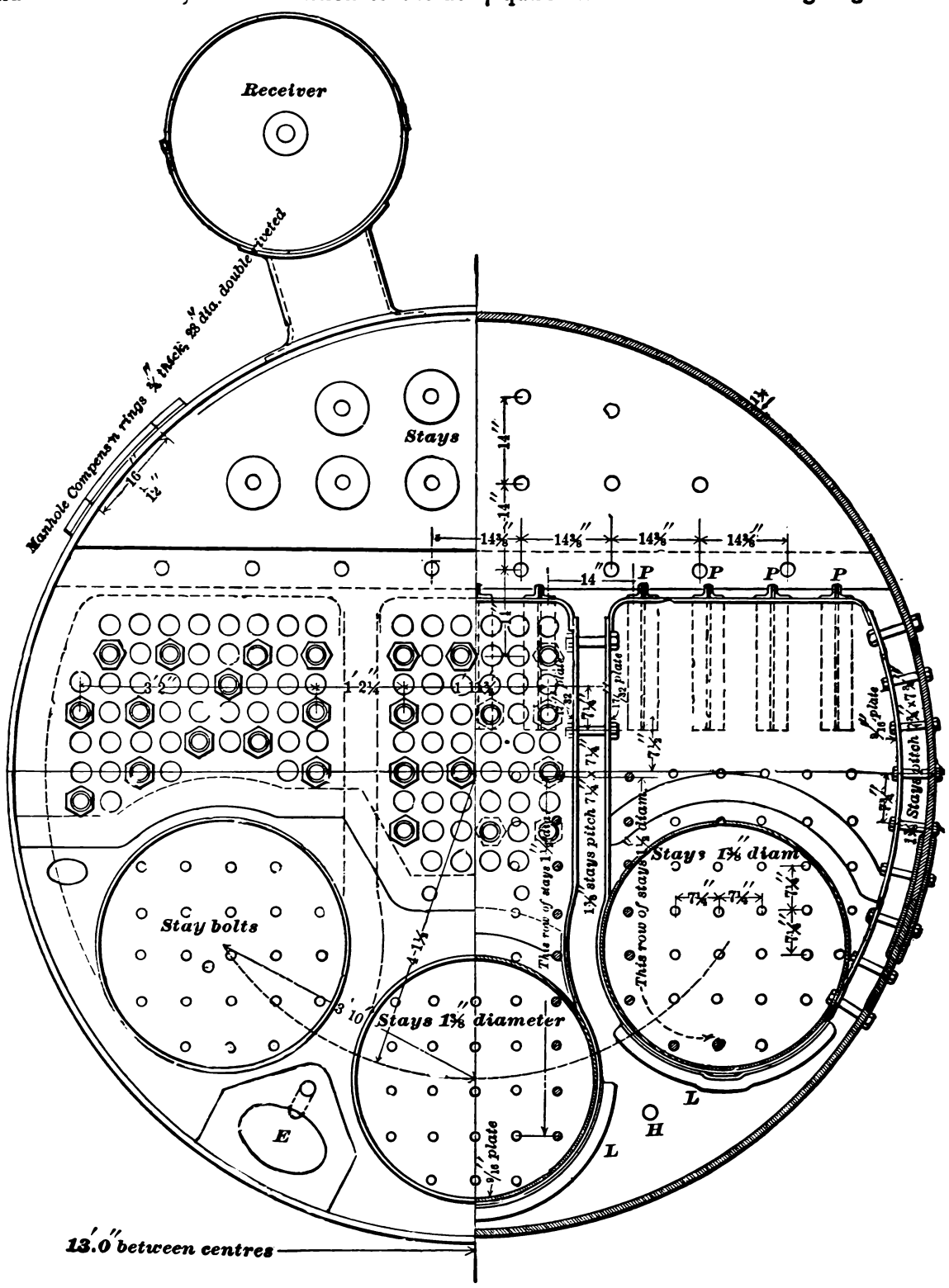

Fig. 3411.

fectiveness of girder stays. Another instance may be given with reference to gusset stays, which, if fitted so as to support too large

"This brings us to the important fact that in almost every instance where the furnaces of marine boilers collapse, they come

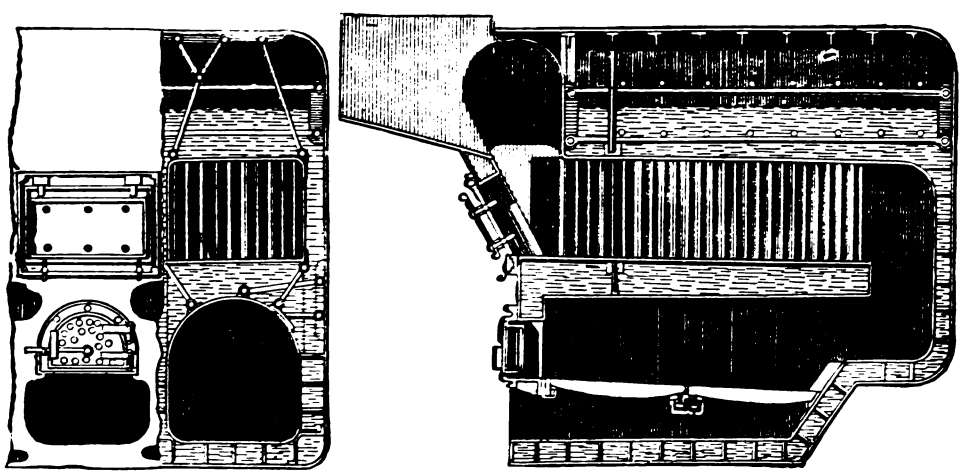

Fig. 3412.

an area of back plate, in proportion to the area of combustion box it supports, may cause the combustion box to distort from its nat-

down at the sides, notwithstanding that when collapse occurs from overheating, the crown of the furnace must have been left bare of

water first, and should therefore come down first, flattening the furnace at the top. This points to the conclusion, that the top of the furnace received some extraneous support.

"When a furnace collapses from corrosion, it naturally gives way at the most corroded part. An hydraulic test to twice the working pressures is recommended for new boilers only, unless it be small vertical cylindrical and steam launch boilers, which may always be subjected to the same test as new main boilers.

"In the case of old main boilers, however, and particularly rectangular ones, an hydraulic test of less than twice the working pressure may be employed, the amount being governed by the circumstances of the case. If, for instance, a boiler has undergone a thorough repair and received new furnaces, then every part of the boiler should have received proportionate consideration and an hydraulic test depending upon the judgment of the responsible engineer, but not less than one and one-half times the working pressure should be made, while one of one and three-quarter times could scarcely be objected to. This, however, is a subject upon which there is some controversy, especially in the case of old boilers having a good foundation of strength, but patched or local weak spots, such as combustion chamber backs and sides, these patches having been, perhaps, made with a view to a more extensive repair in the near future.

"In such a case as this an hydraulic test sufficient to prove the tightness of the seams and joints may, perhaps, be all that is absolutely essential.

"After a boiler has been tested by hydraulic pressure it should be examined internally, as it sometimes occurs that a stay may break under the test (especially if gusset stays are employed), and the extra strain thrown on the adjacent parts may cause them to fail, and thus cause the destruction of the boiler when under strain.

"When an examination is to be made inside and outside of a boiler, the boiler must be properly prepared for the same, which may be done as follows:

"The tubes should be swept; the furnace cleaned out; the fire bars should be taken out; the bridges in the furnace should be taken down; the up take smoke box and combustion box should be cleaned out and swept; every man hole and hand hole or peep hole door should be removed; the bottom of the boiler should be cleaned out and dried (in damp weather a little heat may be necessary for this purpose); all impediments, if any, should be removed in order to allow the bottom outside to be inspected; at the time of inspection a few mats, good lights, a hand hammer and small chipping hammer should be at hand. In the case of a boiler having any plates weakened by corrosion, a $\frac{5}{8}$ inch tapping drill with a drilling brace should also be provided to test the thickness of such plates if considered necessary.

"The safety valves should invariably be taken out for examination, and it is a commendable feature sometimes followed to take out the feed valves, stop valves, blow off and brine cocks; at the same time, all the deposits that would prevent a thorough examination of the boiler should be removed. In some cases, however, there may not be time for the scaling before it is necessary for the repairs to be gone on with, and, in that case, a good examination may with care be made by an experienced man.

"To proceed, then, with the examination, the boiler should be entered through the man hole door beneath the furnaces, examining the boiler bottom and the bottom and sides of the furnaces all the way along, and on arriving at the end of the boiler the water space and stays at the backs of the combustion boxes can be examined as well as the midship combustion box stays and plates. In an old and corroded boiler it may be found necessary to use a chipping hammer very freely about the furnaces, particularly below the lap of the furnace.

"The most corroded part of a furnace will generally be found about on a line with the fire bars, but the furnaces may have suffered from some other cause than the corrosion due to ordinary wear, as, for example, from chemical or galvanic action, and in that case they may be found comparatively good at the sides but with the extreme bottoms in a *dangerously* corroded state, perhaps in the form of pit holes extending half through the plate and *hidden by a coating of red scale, which requires to be chipped away before the pit holes are brought to light.*

"Corrosion by galvanic action may have produced honey combing or a general attack over the surfaces, which have a dark or *dark and sparkling appearance*, the latter more particularly when corrosive action has been very active.

"Of these various classes of corrosion that which is the most deceiving is that which attacks the plates over the largest surface of the plate, leaving at the same time an apparently smooth exterior surface, for in this case the extent of the waste cannot be so clearly detected by the eye, and the only reliable way of testing the thickness is by drilling a hole through the plate.

"The flanges of the furnaces should always be examined in the bends, for flaws, for such defects, although not very common, do at times unexpectedly make their appearance, and might, if not detected, be the means of breaking the boiler down at sea. This part of the inspection being made, any drilling that is to be done to ascertain the thickness of suspected plates may be proceeded with before the rest of the inspection is made.

"It may, however, be well to remark that a very common defect is the wasting away of the combustion box plates around the necks of the stays or the internal surface of the plates, and it is a usual thing for deposits to accumulate around these necks, hence, unless these deposits have been removed (particularly in the case of boilers about three years old), the true condition of the boiler may not be known.

"The plate around the man hole door should next be examined, a great defect from waste at the surface that makes the water tight joint. Next comes the man hole door itself, which should have the rubber or other material used to make the joint cleaned off, for cases have occurred where the surface beneath was found apparently sound, whereas the application of a chisel showed that the iron was so corroded that but little iron was left in the flange, causing great surprise that the whole door had not blown out. This defect may generally be looked for in old boilers, and serves to emphasize the necessity for strong wrought iron doors.

"The outside surfaces of the end plate in the vicinity of the furnace fronts are a great source of trouble in some boilers, particularly where plane furnaces are fitted and flush rivets used for connecting them to the end shell plates.

"The insides of the furnaces and combustion boxes next require attention. The most common defects here are lamination of the furnace plate (if of iron), slight collapsing of furnaces, wasting of the furnace plates (particularly when anthracite coal has been used), and wasting when the fire bar bearers or bridges have rested against the plate.

"In the combustion box the buckling of flat plates may have occurred; plates may have wasted from leaks, distortion of the crown sheet from shortness of water may have occurred, or tubes may leak, and whenever, after sounding with the hammer, doubt exists as to the strength of the plate, a hole should be drilled through to test the thickness.

"The wing sides of the furnace may next be examined (through the usual peep holes or by having a boiler mounting taken off for the purpose), and the shell plating on the sides of the boiler, paying special attention to the plates where the feed water enters.

"We may next examine the outside of the bottom of the boiler, which should never be totally inaccessible to the eye, and should always be capable of being reached by a long-handled paint brush, for if kept well painted, the bottom of the boiler is, so far as the exterior is concerned, as durable as the other parts of the shell.

"If, however, the bottom is not kept painted and gets damp, and more particularly from bilge water, it will corrode rapidly, and the boiler must be lifted for examination. Under these circumstances a new boiler *must* at five years, at the very most, be lifted for examination, and if found comparatively good it should not be taken as an indication of the probable condition of any other boiler working under similar conditions, for the only means of avoiding a great risk in this matter is to rigidly inspect.

"In the case of flat bottomed boilers in small vessels a good result has obtained by placing them on a bed of cement, which if properly done excludes the bilge water from approaching the plate;

but even this precaution would scarcely be sufficient to justify an engineer in neglecting to lift the boiler at reasonable periods for examination of the bottom.

"The internal examination of the boiler is continued from the top by examining the stays in the steam space, the tube and tube plates, getting down between the nests of tubes and reaching the crowns of the furnaces. The surface of the shell plates should also be examined, more particularly if the boiler contains plates subject to heat on the outside and steam on the other (as in the case of wet up take boilers), for under these conditions a steel plate may become as weak and unreliable as a piece of cast iron.

"If the boiler is fitted with the superheater, the examination of the latter is of the utmost importance, as rapid destruction is here a common occurrence. In the case of a circular marine boiler of any size, nothing need be taken for granted, even though an hydraulic test be made up to twice the working pressure, because there is room for a thorough internal inspection which may disclose defects that would not be shown from the hydraulic test. The proper proportions of fire grate surface, heating surface, steam space, etc., in a marine boiler differ with the type of boiler and engine, and the steam pressure and degree of expansion employed.

"Upon the question of steam space, for example, it is asserted by many that marine boilers are not so liable to prime under the higher pressures, and as a result of this asserted fact the steam receiver is in some cases being dispensed with.

"It may be observed, however, that priming to any extent is so costly and detrimental that much consideration needs to be exercised before dispensing with the provisions ordinarily made to prevent it.

"For circular tubular boilers, having a working pressure of from 60 to 80 lbs. per square inch and to be used for compound engines, the following proportions represent current practice.

"1st. One square foot of fire grate area to every indicated horse power of the engine.

"2d. 28 square feet of heating surface * to 1 square foot of fire grate area.

"3d. 6½ to 8 cubic feet of steam space to each square foot of fire grate area

"4th. 8 to 10 square feet of tube surface to the total heating surface in single ended boilers.

"5th. 8½ to 10 is about the ratio of tube surface to the total heating surface in double ended boilers.

"6th. The diameters of boiler tubes should be about one-half inch for each foot of length of tube. If less, the tube is liable to choke. About 14 cubic feet of steam (of from 60 to 80 lbs. pressure) should be made for each square foot of fire grate area.

"Each square foot of fire grate will burn from 13 to 18 lbs. of steam coal per hour. About 1½ cubic feet of live steam (of the above pressure) is required for each indicated horse power."

---

* The heating surface here referred to includes the total interior surface of the tubes, the sides, backs, crowns and tube plates of the combustion boxes, and that part of the furnace that is above the level of the fire bars, but does not include the front tube plate (*i. e.*, the tube plate in the smoke box).

Chapter XLII.—HARDENING AND TEMPERING.

HARDENING and tempering processes are performed upon steel for three purposes:

1st. To enable it to resist abrasion and wear.

2nd. To increase its elasticity.

3rd. To enable it to cut hard substances and increase the durability of the cutting edge.

Of these, the first is the simplest, because the precise degree of hardness imparted is not of vital importance.

The second is more difficult, because the quality of the steel employed for such purposes is variable, and hence the tempering process must be varied to suit the steel. The third is of the greatest importance, because the articles to be tempered are the most expensive to make, the duty obtained is of the greatest consequence to manufacturing pursuits, and the fine grade of steel employed renders it more liable to crack in the hardening process.

In those mechanical parts of machines which are hardened to resist abrasion and wear, the quality or grade of the steel is very often selected with a view to obtain strength in the parts and ease of mechanical manipulation in cutting them to the required shape, rather than to the capacity of the steel to harden. Hence, tougher and more fibrous grades of soft steel termed "Machine" steel, are employed, meaning that the steel is especially suitable for the working parts of machines. This class of steel is of a lower grade than that known as "tool" steel. It is softer, works, both on the anvil and in the lathe, more easily, and will bear heating to a higher temperature without deteriorating. It approaches more nearly to wrought iron, and is sometimes made of so low a grade as to be scarcely distinguishable therefrom.

The kinds of steel used where elasticity is desired are known as spring steel, blister steel, and shear or double-shear steel, although, for small springs, steel of the tool-steel class is often employed.

The word *temper*, as used by the manufacturer of steel, means the percentage of carbon it contains, the following being the most useful tempers of cast steel.

Razor Temper ($1\frac{1}{2}$ per cent. carbon).—This steel is so easily burnt by being overheated that it can only be placed in the hands of a very skilful workman. When properly treated it will do twice the work of ordinary tool steel for turning chilled rolls, &c.

Saw-file Temper ($1\frac{3}{8}$ per cent. carbon).—This steel requires careful treatment, and although it will stand more fire than the preceding temper should not be heated above a cherry red.

Tool Temper ($1\frac{1}{4}$ per cent. carbon).—The most useful temper for turning tools, drills, and planing-machine tools in the hands of ordinary workmen. It is possible to weld cast steel of this temper, but not without care and skill.

Spindle Temper ($1\frac{1}{8}$ per cent. carbon).—A very useful temper for mill picks, circular cutters, very large turning tools, taps, screwing dies, &c. This temper requires considerable care in welding.

Chisel Temper (1 per cent. carbon).—An extremely useful temper, combining, as it does, great toughness in the unhardened state, with the capacity of hardening at a low heat. It may also be welded without much difficulty. It is, consequently, well adapted for tools, where the unhardened part is required to stand the blow of a hammer without snipping, and where a hard cutting edge is required, such as cold chisels, hot salts, &c.

Set Temper ($\frac{7}{8}$ per cent. carbon).—This temper is adapted for tools where the chief punishment is on the unhardened part, such as cold sets which have to stand the blows of a very heavy hammer.

Die Temper ($\frac{3}{4}$ per cent. carbon).—The most suitable temper for tools where the surface only is required to be hard, and where the capacity to withstand great pressure is of importance, such as stamping or pressing dies, boiler cups, &c. Both the last two tempers may be easily welded by a mechanic accustomed to weld cast steel.

The preference of an expert temperer for a particular brand of steel is, by no means, to be taken as proof of the superiority of that steel for the specific purpose. It may be that, under his conditions of manipulation, it is the best, but it may also be that, under a slight variation of treatment, other brands would be equal or even superior. It may be accepted as a rule that the reputation of a steel for a particular purpose is a sufficient guarantee of its adaptability to that purpose, and all that is necessary to a practical man is to be guided by the reputation of the brand of steel, and only change when he finds defects in the results, or ascertains that others are using a different steel with superior results.

Where large quantities of steel are used the steel manufacturers in many cases request customers to state for what particular purposes the steel is required, their experience teaching them what special grade of their make of steel is most suitable.

To harden steel it is heated to what is termed a "cherry red" and then dipped into water and held there until its temperature is reduced to that of the water.

Tempering steel as the blacksmith practises it consists in modifying, lowering, or tempering the degree of hardness obtained by hardening. The hardening of steel makes it brittle and weak in proportion as it is hardened, but this brittleness and weakness are removed and the steel recovers the strength and toughness due to its soft state in proportion as it is lowered or tempered.

When therefore a tool requires more strength than it possesses when hardened, it is strengthened by tempering it. Tempering proceeds in precise proportion as the temperature of the hardened steel is raised. When the steel is heated to redness the effects of the hardening are entirely removed, and the steel, if allowed to cool slowly, is softened or annealed. To distinguish maximum hardness from any lesser degree the terms to give the steel "all the water," or to harden it "right out" are employed, both signifying that the steel was heated to at least a clear red, was cooled off in the water before being removed from the same, and was not subsequently tempered or modified in its hardness. If a piece of steel has its surface bright and is slowly heated, that surface will assume various colors, beginning with a pale straw color (which begins when the steel is heated to about 430°) and proceeds as in the following table:—

	Fahr.
Very pale yellow	430°
Straw yellow	460
Brown yellow	500
Light purple	530
Dark purple	550
Clear blue	570
Pale blue	610
Blue tinged with green	630

It happens that between the degree of hardness of hardened steel and the temper due to reheating it up to about 600° Fahr. lie all the degrees of hardness which experience has taught us are necessary for all steel-cutting tools. Hence we may use the appearance of colors as equivalent to a thermometer, and this is called color-tempering. The presence of these colors or of any one of the tints of color, however, is no guarantee that the steel has been tempered or possesses any degree of hardness above the normal condition, because they appear upon steel that is soft or has not been hardened. To obtain exact results by color tempering, therefore, the steel must first be thoroughly hardened, and this is known in practice by the whiteness of the hardened surface.

Any number of pieces hardened so as to have a white surface may be tempered to an equal degree of color, or heated to an equal thermometrical temperature, with the assurance that they will possess a degree of hardness sufficiently uniform for all practical purposes; but if their hardened surfaces have dark patches, tempering to an equal tint of color is no guide as to their degree of temper. Successful tempering, therefore, must be preceded by proper hardening.

The muffle should therefore bear such a proportion in size that when heated to a blood red, and taken from the fire, its temperature will be reduced to nearly that of the steel when it has acquired its proper degree of temper.

The shape of the bore of the muffle should always conform to that of the article tempered; for round work, a round muffle; for square work, a square one; and so on. The muffle should be shorter than the work, so that the tempering of either end of the work may be retarded, if it is proceeding too fast, by allowing that end to protrude through the muffle.

Color tempering, it will be observed, gives us no guide or idea of any of the degrees of temper which occur while the hardened steel is being heated up to about 430° Fahr.; and thus it leaves us in the dark as to all the ranges of hardness existing in steel thoroughly hardened and tempered to any degree less than that due to about 430° degrees of reheating. How wide this range may be can be appreciated when it is remembered that in the color test there are only 200° of heat between the hardness known as straw color, which is hard enough for almost all cutting purposes, and blue, tinged with green, which is almost normal softness.

It is for this reason (among others) that where very exact results are to be obtained and a large number of pieces are to be tempered, fluxes, heated to the required temperature, are very often employed.

Color tempering is conducted in different ways. In a muffle, in heated sand, with hot pieces of flat iron, and in boxes heated to the requisite temperature in an oven, the temperature being indicated by a pyrometer or heat-gauge. The articles to be tempered remain in the oven a length of time determined by experiment or experience, these being influenced by the size and substance, or thickness, of the pieces.

A muffle is a tube or cylinder receiving its heat from the outside and open at the end or ends to receive the steel. Where tempering is carried on continuously the muffle is kept in the fire, although it is claimed by many that better results are obtained by removing it from the fire when heated. It is obvious that if the muffle is heated evenly the steel will temper most evenly by being held in the centre of the muffle, or the piece may be revolved and moved endways in the muffle in order that the steel may heat evenly. The tempering should always proceed slowly, otherwise the heat may not have time to penetrate the steel to the centre, the outside tempering more quickly, thus the tool will be weak because of the undue hardness of the interior metal. Furthermore, protruding edges, or slight sections of the steel, may reduce to the required temper before the main body of the steel, which induces either serious weakness of the insufficiently tempered part, or softness in the thin sections, providing that the steel is kept long enough in the muffle to temper the main body to the proper degree.

In heating steel to harden it, especial care is necessary, particularly when the tool is one finished to size, if its form is slight or irregular, or if it is a very long one, because unless the conditions both of heating and cooling be such that the temperature is raised and lowered uniformly throughout the mass, a change of form known as *warping* will ensue. If one part gets hotter than another it expands more, and the form of the steel undergoes the change necessary to accommodate this local expansion, and this alteration of shape becomes permanent. In work finished and fitted this is of very great consideration, and, in the case of tools, it often assumes sufficient importance to entirely destroy their value If, then, an article has a thin side, it requires to be so manipulated in the fire that such side shall not become heated in advance of the rest of the body of the metal, or it will become locally distorted or warped, because, though there may exist but little difference in the temperature of the various parts, the more solid parts are too strong to give way to permit the expansion: hence the latter is accommodated at the expense of the form of the weakest part of the article.

Pieces, such as long taps, are very apt to warp both in the fire and in the water. In heating, they should rest upon an even bed of coked coal, and be revolved almost continuously while moved endways in the fire; or when the length is excessive, they may be rested in a heated tube, so that they may not bend of their own weight. So, likewise, spirals may be heated upon cylindrical pieces of iron or tubes to prevent their own weight from bending or disarranging the coils.

Experiments have demonstrated that the greater part of the hardness of steel depends upon the quickness with which its temperature is reduced from about 500° to a few degrees below 500°, and metal heated to 500° must be surrounded by a temperature which renders the existence of water under atmospheric pressure impossible; hence, so long as this temperature exists the steel cannot be in contact with the water, or, in other words, the heat from the steel vaporizes the immediately surrounding water. The vapour thus formed penetrates the surrounding water and is condensed, and from this action there is surrounding the steel a film of vapour separating the water from the steel, which continues so long as the heat from the steel is sufficiently great to maintain the film against the pressure of the water and the power of the water which rushes toward the steel to fill the spaces left vacant by the condensation of the vapour as it meets a cooler temperature and condenses. The thickness of the vapour film depends mainly upon the temperature of the steel; but here another consideration claims attention. As the heated steel enters the water the underneath side is constantly meeting water at its normal temperature, while the upper side is surrounded by water that the steel has passed by, and, to a certain extent, raised the temperature of. Hence, the vapour on the underneath side is the thinnest, because it is attacked with colder water and with greater force, because of the motion of the steel in dipping. For these reasons it is desirable, especially with thick pieces of steel, to inject the water in a full stream upon the article, as is done in the Brown & Sharpe hardening tanks.

In cases where a great many pieces are to be hardened and tempered to an even degree, the steel is heated for the hardening in a flue, with the advantage that contact between the heated steel and the impurities (as sulphur or silicon) of ordinary fuels is avoided, and also that all the pieces may be heated, and therefore hardened, to a uniform degree. The capacity of this system is great, because a number of pieces can be heated without fear of any of them becoming overheated if not attended to immediately. Thus the Waltham Watch Co. heat their mainsprings for the hardening in a flux composed of melted salt and cyanide of potash, the latter serving to clean the surface of the steel; but as the latter wastes it requires to be added occasionally.

The Watch Company, however, find this mixture will not do for the hair springs, as it alters (to a very small degree, however) the nature of the steel; hence these springs are heated for hardening in melted glass.

The Pratt and Whitney Co. heat their taps, &c., for hardening in a composition of equal quantities of salt and cyanide of potash, adding the latter as it wastes, and temper them by the color test.

The Morse Twist Drill Co. use a similar compound for heating to harden, and the following apparatus for dipping. In a large tank having a free water circulation, stand two pots of a capacity of about five gallons each, one of these contains cyanide of potash and salt, and another sperm oil. The heated work is dipped for an instant into the pot containing the potash and salt, which clean the surface of the steel, and then cooled in the main water tank; but if the work is, from its shape, liable to crack, it is at the final cooling dipped in the pot of sperm oil instead of in the water.

Before heating the steel it is dipped in soft soap to prevent oxidation, and on dipping it into the potash and salt pot it causes a cracking sound, the operator knowing from the sound if the mixture is proper, and how long to hold the steel therein.

This company first fill the heating pot with salt, and then add cyanide of potash until a trial of the tool gives quite satisfactory results, adding cyanide of potash as the work proceeds to make

up for the evaporation and keep the mixture of the compound correct.

In many cases it is considered an advantage to harden the outside of an article, keeping the inside as soft as possible so as to increase the strength. In such case the article may be heated in red-hot lead, the surface of which may be covered with charcoal. Under these conditions the outside of the article, especially if thick, will get red hot in advance of the inside.

Articles having thick and thin sections may be heated in fluxes to great advantage, the thick side being immersed first, and the article being lowered very slowly into the pot of lead. If the shape of the article is such as to render it liable to crack in the water because of containing holes or sharp corners in weak parts, these holes and sharp corners may be filled with fire-clay, the dipping water may be heated to about 50°, and salt (1 lb. per gallon of water) added to it.

The Monitor Sewing Machine Company harden and temper their spiral springs at one operation, by heating them to a blood-red heat and quenching them in a mixture of milk and water, which will give an excellent result, providing that the springs are heated to precise uniformity and the mixture of milk and water is correct. For a process of this kind (which is very expeditious, because the hardening and tempering is performed at one operation), the steel should be heated to a very uniform temperature, and a mixture of, say, two-thirds milk and one-third water tried at first, more milk being added to lower the temper, or more water to increase it if necessary.

Saws are hardened in compositions of animal oil, such as whale-oil, with which resin, pitch, and tallow are sometimes mixed.

Resin hardens but somewhat crystallises the metal, but it is used because, on common saws, the scale will not strike properly without it. Tallow gives body to the liquid and causes it to extract the heat quickly from the steel (and the hardening is solely due to the rapid extraction of the heat). In addition to this, the saws hardened in oil and tallow show a very fine grain if fractured, and are tough. The effect of pitch is much the same as that of resin. In place of tallow, bees-wax is sometimes used, giving an excellent result. A very little spirits of turpentine mixed with the oil every time it is used (that is, for every batch) is an excellent ingredient to cause the scale to strike, but being very inflammable, it is somewhat dangerous. If none of these ingredients are used, and the scale does not strike, it acts as a fine separating lining, preventing the contact between the metal and the liquid, and hence retarding the cooling, and therefore the hardening.

Let us suppose some thin saws of the finest grade of steel are to be tempered. The liquid would be about half a barrel of tallow to a barrel of whale-oil (which will harden as hard as glass). After the temperature of the saw is reduced to that of the bath, it is removed, the adhering oil is removed, and the surface dried by an application of sawdust, and the tempering process may be proceeded with.

There are three methods of drawing the temper. One is with the saw lying in the open furnace; a second, an English plan, is with the saw stretched in a frame, so as to prevent its warping, and in fact, to cause the tempering to aid in straightening the saw; and the third is to temper between flat dies.

In the first, the temper is determined by the appearance of the saw in the furnace. The saw absorbs some of the liquid in which it was quenched to harden it; and as it is reheated to temper it, this oil passes off as a cloud, or rather as a breath passes off the surface of a window-pane. This action takes place first on the lower surface of the saw, nearest to the furnace bottom, the oil exuding in a mist-like form. The length of time the saw must remain in the furnace after the cloud has passed off is determined by the thickness of the saw and the heat of the furnace, the operator being guided entirely by experience; but when the saw is taken from the furnace, it will have a very dark-red glimmer, and must be laid flat and allowed to cool off in the air, for if again dipped it would be too hard. When cool, the saw thus tempered will be of a sky-blue color, and will spring from point to butt without bend or break. This process requires skilful management and good judgment, but will give most excellent results. The main objection to it is, that it is expensive, since it gives no aid to the straightening processes.

The straightening frame, or English tempering system, is as follows: The plates of steel are made of a size that will cut into four saws. The furnace front is provided with a tramway extending to the floor of the furnace, and on this runs the stretcher-frame. The plates are stretched in the frame, which is run into the furnace so that the plate is heated under a tension, which operates to straighten them. As the temper lowers, the screws of the stretcher are turned, increasing the tension; when the tempering is done, the screws are made to stretch the plates very tight just previous to taking it from the fire, and the plates are allowed partly to cool off while kept in the frame. In this process the indications of the temper are determined as in the first process. In the third process, the saws are placed between a stationary and a movable die provided in the body of the furnace, the movable one descending and pressing the saw to the other die; thus the tempering is accompanied by a flattening process (the dies being operated by pressure). The degree of temper is regulated by the temperature to which the saws are heated, which is ascertained by a pyrometer. The furnace is kept at a constant temperature, and the length of time the saw remains between the dies is varied to suit the thickness of the saw. The gain due to this system is, that less straightening is required and a determinate temperature is secured. Some makers claim that in this system the vapour of oil that exudes from the saw has no means of escape, and that a chemical effect injurious to the steel ensues; and furthermore that the temperature of the dies will be greatest at or near their circumference, and hence the teeth and back and the ends of the saw will be softer than the middle of the width and length of the saw, and that if two saws, one above the other, be placed on the dies at once, the contacting surfaces of the saws will be the hardest, and those surfaces will be black by reason of the oil burning into the steel, instead of exuding, as in the open furnace process.

The floor of the tempering furnace should be flat and even; for if any part of the saw-plate lies suspended, it will sag when heated, greatly increasing the amount of straightening required. The furnace must be so constructed as to heat evenly all over, otherwise the temper of the saw will not be even. The air must be carefully excluded to prevent the steel from decarbonizing, which being thin, it is very apt to do. Thin saws warp proportionally as they are heated more, and if they are allowed to remain longer in the furnace and not heated too quickly, existing buckles or bends will partly straighten themselves in the furnace. Care must be taken to keep the tongs clear of the teeth, and in taking the saws from the furnace the length of the saw must stand at a right angle to the operator (two pairs of tongs being used), so that the saw's own weight shall not cause it to bend. The saw must be transferred from the furnace to the bath very quickly, to prevent, as much as possible, its cooling in the air; for such cooling would take place unequally, causing the saw to warp, as well as impairing the temper. It should be dipped with the length horizontal, the teeth downward and the side faces vertical, and plunged quickly into the bath. On being dipped in the hardening liquid, they warp again, but the dipping may be manipulated to partly regulate the warping. From the moment the cold air strikes the plate a warping process sets in, hence quickness in transferring from the furnace to the bath is a great point. When the saw is hot enough to temper, the scale will begin to rise upon its surface, and if the furnace is unequally heated, the scale will rise first at the hottest part, instantly notifying the operator of the defect.

From the appearance of the surface of the saw after it comes from the hardening bath, the operator can see if it is properly hardened. If so, the scale will be what is termed "struck," that is, it has come off, leaving the surface from a grey to a white color; while if the scale remains in dark patches, the saw is too soft in those parts.

After the saws are tempered they are allowed to cool in the open air, and then require to be straightened by the hammer, and in this process the tempering has been interfered with, inasmuch as that the elasticity due to the tempering has been

counterbalanced to some extent by the local condensation of the metal induced by the immediate effects of the hammer blows. The condensation of the metal has impaired the natural grain or fibre of the metal, and stiffens it so that if the saw be bent these stiffened hammer marks will cause it to remain set instead of springing back straight, as it should do. To remove this defect the saws are what is termed *stiffened*, that is, they are heated until the surface assumes a yellow color, when they are removed and allowed to cool. This causes the metal condensed by the hammer to assume its natural structural condition, and permits the tempering to spring the saw back straight, even though it be bent until the two ends touch, and the bend carried half way along the blade by carrying one end forward along the blade surface. The yellow color is subsequently removed by an application of a solution of muriatic acid.

The method employed by the Tomlinson Carriage Spring Company for carriage springs is as follows:—

The spring plates are heated to bend them to the *former*, which is a plate serving as a gauge whereby to bend the plate to its proper curve, which operation is performed quickly enough to leave the steel sufficiently hot for the hardening; hence the plates after bending are dipped edgeways and level into a tank of linseed oil which sets in a tank of circulating water, the latter serving to keep the oil at about a temperature of 70° when in constant use. About 3 inches from the bottom of the oil tank is a screw to prevent the plates from falling to the bottom among the refuse.

To draw the temper the hardened springs are placed in the furnace, which has the air-blast turned off, and when the scale begins to rise, showing that the adhering oil is about to take fire, they are turned end for end in the furnace so as to heat them equally all over. When the oil blazes and is freely blazed off, the springs are removed and allowed to cool in the open air, but if the heat of a plate, when dipped in the oil to harden is rather low, it is cooled, after blazing, in water. The cooling after blazing thus being employed to equalize any slight difference in the heat of the spring when hardened.

The furnace is about 10 inches wide and about 4 inches longer than the longest spring. The grate bars are arranged *across* the furnace with a distance of $\frac{3}{8}$ inch between them. The coal used is egg anthracite. It is first placed at the back of the furnace, and raked forward as it becomes ignited and burns clearly. For shorter springs the coal is kept banked at the back of the furnace, so that the full length of the furnace is not operative, which, of course, saves fuel. By feeding the fire at the back end of the furnace, the gases formed before the coal burns clearly pass up the chimney without passing over the plates, which heat over a clear fire.

For commoner brands of steel, what is termed a water-chill temper is given. This process is not as good as oil-tempering, but serves excellently for the quality of steel on which it is employed. The process is as follows: The springs are heated and bent to shape on the *former* plate as before said; while at a clear red heat, and still held firmly to the *former* plate, water is poured from a dipper passed along the plate. The dipper is filled four or five times, according to the heat of the plate, which is cooled down to a low or very deep red. The cooling process on a plate $1\frac{1}{2} \times \frac{1}{4}$ inches occupies about 6 seconds on an average, but longer if the steel was not at a clear red, and less if of a brighter red, when the cooling began. Some brands of steel of the *Swede steel* class will not temper by the water-chill process while yet other brands will not harden in oil, in which case water is used to dip the plates in for hardening, the tempering being blazing in oil as described. In all cases, however, steel that will not harden in oil will not temper by the water-chill process.

The Columbia Car Spring Company temper their springs as follows:—Using "Gregory crucible steel," heating is performed in a furnace consuming gas coke, but the furnace has a number of return enclosed flues, and between these flues (one over the other), are ovens, the heat passing through the brick-work forming the flues into the ovens. To facilitate renewing the ovens (which of course also renews the flues), the floor of each oven (which forms the ceiling of the oven below), is built on iron supports, protected by the brick-work and suitable fire clay, the bricks all being made to pattern, thus involving very little labor in building. The furnace doors are at the ends, and are kept closed as much as possible. In this way the steel has no contact with the products of combustion of the fuel, and the air is excluded as far as practicable (two valuable features). The furnaces are long and narrow, and not being connected with the flue there is but little disposition for the cold air to rush in when the furnace doors are opened.

The hardening and tempering of springs whose coils are of thick cross-section is performed at one operation as follows: The springs are heated in the furnace or oven described, and are first immersed for a certain period in a tank containing fish oil (obtained from the fish "*Moss Bunker*," and termed "*straights*"), and are then removed and cooled in a tank of water. The period of immersion in the oil is governed solely by the operator's judgment, depending upon the thickness of the cross-section of the spring coil, or, in other words, the diameter of the round steel of which the spring is made.

The table below gives examples of the hardening and tempering in this way of springs of the following dimensions:—

Number of coils in spring	$5\frac{3}{4}$
Length of the spring	6 inches.
Outside diameter of coils	$4\frac{3}{4}$
Diameter of steel	1

Examples.	Time of Immersion in Oil.	Number of Swings in Oil.
	Seconds.	
First	28	35
Second	36	46
Third	27	36
Fourth	38	40

As will he seen, the spring in the first example was immersed in the oil and slowly swung back and forth for 28 seconds, having been given 35 swings during that time. Upon removal from the oil the spring took fire, was redipped for one second, and then put in the cold water tank to cool off.

The following are examples in hardening and tempering springs of the following dimensions:—

Number of coils in the springs	6
Length of the springs	9 inches.
Inside diameter of coils	$3\frac{1}{4}$
Size of steel	$1 \times 1\frac{1}{2}$ square.

Examples.	Time of Immersion in Oil.	Number of Swings in Oil.
	Seconds.	
First	9	12
Second	8	12
Third	8	12
Fourth	9	12
Fifth	9	12
Sixth	9	12

To keep the tempering oil cool and at an even temperature, the tank of fish oil was in a second or outer tank containing water, a circulation of the latter being maintained by a pump. The swinging of the coils causes a circulation of the oil, while at the same time it hastens the cooling of the spring. The water tank was kept cool by a constant stream and overflow. If a spring, upon being taken from the oil, took fire, it was again immersed as

in the first example. Resin and pitch are sometimes added to the oil to increase its hardening capacity, if necessary.

The test to which these springs were subjected was to compress them until the coils touched each other, measuring the height of the spring after each test, and continuing the operation until at two consecutive tests the spring came back to its height before the two respective compressions. The amount of set under these conditions is found to vary from $\frac{3}{8}$ inch, in comparatively weak, to $\frac{7}{8}$ inch for large stiff ones.

The New Haven Clock Company heat their springs in a furnace burning wood, the springs being *kept in the flames only*, and quenched in a composition of the following proportions:—"To a barrel of oil 10 quarts of resin and 12 quarts of tallow are added."

If the springs "fly," that is, break, more tallow is added, but if the fracture indicates brittleness or granulation of the steel, rather than excessive hardness, a ball of yellow beeswax, of about 6 inches in diameter, is added to the above.

These springs are tempered, singly, to a reddish purple by being placed on a frame having horizontally radiating arms like a "star," which is attached at the end of a vertical rod. The spring is laid on the "star" and lowered into a pot of melted lead, being held there a length of time dictated by the judgment of the operator.

The star-shaped frame is termed a sinker, and if upon being lifted from the lead the colour of the spring is too high, a second immersion is given.

COLOR TEMPERING SCALE.

KEY.

NOTE.—The range of color for tempering each of the several tools named below, as indicated by the figures set opposite (e.g., *Augers*..13 to 15), represents the range of practice among the leading manufacturers of the United States.

Augers	13-15
Axes	20-30
Bits, Half-round	13-15
Boring-bar Cutters for Iron	30-45
Boring-bar Cutters for Steel	35-50
Chasers	30-40
Chisels, Carpenters'	20-28
Cold Chisels for Cast Iron	18-23
Cold Chisels for Steel	21-25
Cold Chisels for Wrought Iron	6-15
Coopers' Tools	14-19
Dental Instruments	25-30
Dies and Punches	25-30
Dies for Copper Work	38-42
Dies, Leather-cutting	40-43
Dies, Screw-cutting, large	31-36
Drifts	25-32
Edging Cutters	25-35
Engravers' Tools	35-45
Hack Saws	10-20
Half-round Bits	13-15
Hammer Faces	40-50
Inserted Saw Teeth	25-30
Leather-cutting Dies	40-43
Milling Cutters	40-50
Molding Cutters, to be filed	7-10
Mowing-machine Knives	20-50
Needles	15-18
Paper-cutting Tools	30-40
Penknife Blades	20-28
Plane Irons	15-25
Planer Tools for Iron	30-45
Planer Tools for Steel	35-50
Punches and Dies	25-30
Razors	35-40
Reamers	35-50
Rock Drills	20-30
Saws, Circular, for Metal	4-8
Saws for Bone and Ivory	1-3
Saws for Wood	1 or below
Scrapers for Brass	38-50
Screw-cutting Dies, large	31-36
Shearing-machine Cutters	18-24
Springs, Carriage	5-10
Springs, Spiral	1 or below
Stone Cutters' Tools	20-30
Surgical Instruments	25-30
Taps	27-33
Taps, small	25-40
Turning Tools, slight	30-40
Twist Drills for Steel	38-42
Twist Drills for Wood	7-18
Twist Drills for Wrought Iron	33-38
Wire-drawing Dies	43-47
Wood-boring Tools	13-15
Wood-planer Cutters, to be filed	10-13

SCALE.

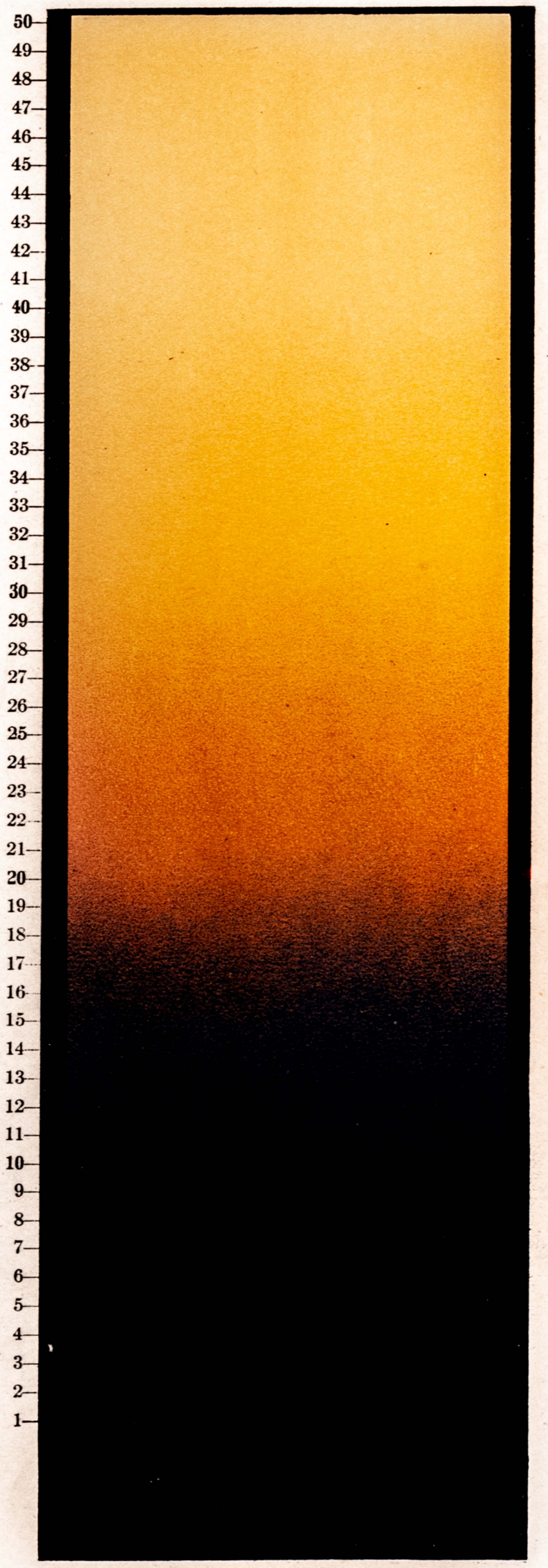

Patented July 2, 1878.

Copyright, 1888, by Charles Scribner's Sons.

SUPPLIED EXCLUSIVELY TO SUBSCRIBERS FOR MODERN MACHINE SHOP PRACTICE.

CHAPTER XLIII.—REFRIGERATION AND ICE MAKING.

REFRIGERATING means cooling; in other words, removing heat. A common example of a refrigerating machine is an ordinary ice-chest used to remove heat from food. The air enclosed within the chest, touching the ice, gives off heat to the ice, and thereby is cooled and becomes heavier than the uncooled air not yet in contact with the ice, and consequently at once sinks down to the bottom of the chest and comes in contact with the food. The food in turn gives up its heat to this colder air, which is thereby made warm again. The new supply of colder air coming down from the ice pushes this warmer, lighter air aside and crowds it upward to be again made cool by contact with the ice. The air thus continues on its never-ending journey, taking a little heat from the food and giving it up to the ice on every trip.

The heat taken from the air by the ice changes the ice to water, and is thereby carried out of the ice-chest with the water through the drain-pipe.

This explains in a simple manner the whole method of mechanical refrigeration. In all such operations, whether on a small or on a great scale, some circulating substance is used to take heat from the article or room to be cooled, carry the heat to some other place and give it up, and return again to take up more heat and carry it away unceasingly. In the ice-chest, air is the circulating substance, and it moves up and down in its circuit freely, because being cooled it becomes heavier, and being warmed it becomes lighter.

To perform this operation economically, on a large scale, and to reduce temperature to points colder than freezing, other substances than ice and air are employed, and the circulating substance is forced from point to point of its circuit by a powerful pump. To understand the manner of using these substances is to understand the process of boiling water or changing water from a liquid to a vapor (steam).

Every one knows that water in thus changing to steam takes up a very great amount of heat from the fire, or, what is the same

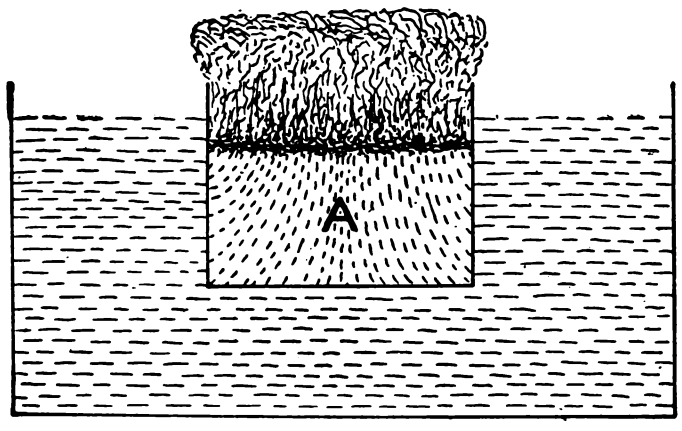

Fig. 3413.

thing, the fire gives to the water a large amount of heat; and that this heat is constantly leaving the water with the steam and passing off into the surrounding air. This is true of all substances in boiling, or changing from a liquid to a vapor. Indeed, it is true that no substance can change from a liquid to a vapor without taking up heat, whether it changes rapidly as in boiling, or slowly as in the ordinary evaporation of liquids in the open air. It is also true that the vapor passing away from the liquid carries with it the heat used in producing the change.

Some substances change into vapor very much more rapidly than water. One of these is ammonia. Even ordinary ammonia water (water with a little ammonia in it) gives off vapor very readily at ordinary temperatures, as all persons know who have tried smelling of such a solution of ammonia.

Pure ammonia, unmixed with water (anhydrous ammonia) changes into vapor so readily that, if an open dish of it be exposed, it will take up heat enough from the surrounding air or water to boil violently and change rapidly to vapor.

Fig. 3413 illustrates such an operation. The ammonia A in the smaller can is surrounded by water in the larger dish. The ammonia in changing from its liquid form to a vapor takes heat rapidly from the water surrounding it. It is, therefore, easy to understand that if this process were continued, the water would at length lose heat enough to freeze. If, instead of a dish of water

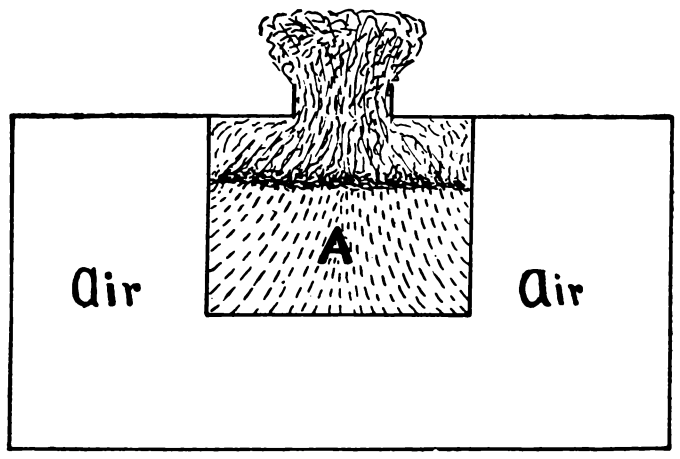

Fig. 3414.

surrounding the ammonia, there had been an enclosed box of air, as in Fig. 3414, the vaporizing ammonia would have taken heat from the air, and if the process were continued long enough, the air would lose its heat until cooled to 28° below zero F. before the ammonia ceased to boil.

This is just what is done in taking heat from the great cooling-rooms and cold boxes of breweries, abattoirs, packing-houses, markets, cold-storage houses, hotels, restaurants, dairies, creameries, chemical works, confectionery and chocolate manufactories, steamships, steam yachts, oil refineries, sugar refineries, apartment houses, infirmaries, and asylums.

Because cold storage is becoming so prominent a branch of refrigeration, the accompanying table of temperatures for cold storage is introduced:

TEMPERATURES FOR COLD STORAGE.

(*From the De La Vergne Refrigerating Machine Co.*)

Goods.	Temp. F.	Goods.	Temp. F.	Goods.	Temp. F.
Apples	33°	Corned Beef	40°	Oleomargarine	35°
Ale and Beer	35	Dried Fish	35	Onions	36
Bottled Beer	45	Dried Fruits	35	Oil	35
Beef	35	Dried Corn	35	Oysters in Tubs	25
Berries	40	Eggs	33	Oysters in Shell	33
Butter & Butterine	25	Furs Undressed	28	Pears	35
Buckwheat & Flour	40	Furs Dressed	28	Peaches	35
Calves	32	Grapes	36	Pork	40
Canned Goods	35	Ginger Ale	36	Poultry	20
Cured Goods	35	Hops	32	Sauerkraut	35
Cider	35	Lard	40	Syrup	40
Cheese	28	Lard Oil	40	Tobacco	32
Cigars	32	Lemons	36	Vegetables	35
Celery	35	Maple Sugar	40	Walnuts	35
Cranberries	33	Maple Syrup	40	Oranges	36
Chestnuts	33	Nuts	35	Sweet Corn	35

It is to be understood, however, that these temperatures are not given as finally authoritative, since each year's experience serves to modify previous knowledge.

Properly used, ammonia is less expensive than ice for large cooling operations. Not, however, if used in a way to permit the vapor to be wasted, as shown in Figs. 3413 and 3414, or it would be much more expensive than ice.

Instead of being used in an open dish, it is subjected to a forced circulation in a continuous system of pipes having no openings whatever. A portion of these pipes are located in the room to be cooled, and a portion of them are located outside of that room. As the ammonia is forced (in a very fine stream, with a pressure of from 125 to 175 pounds per square inch) into the pipes within the cooling room, it boils quickly into vapor, because the pressure which holds it in the liquid state is suddenly reduced to only from 10 to 30 pounds per square inch; and in thus changing into vapor it takes up heat rapidly from those pipes, and they in turn take up heat from the air surrounding them, and therefore the air confined in the cooling room is thereby made colder and colder continuously.

The ammonia vapor, carrying with it the heat which it has taken up, is constantly pumped out of the cooling-room pipes. A minute stream of liquid ammonia is at the same time constantly forced into the cooling-room pipes, as before stated, to make the operation continuous.

The pumping process greatly compresses the ammonia vapor, and thereby increases its heat, and the condensing pipes (outside of the cooling room) into which it is pumped are cooled by means of cold water running over them. Being thus made colder than the warm ammonia vapor which is forced into them, the ammonia vapor gives up its heat constantly to these outside pipes. They in turn give up the heat which they have taken from the ammonia vapor within them to the colder surrounding water; and the water, running off into drainage pipes, constantly carries the heat away from the entire system of pipes.

The ammonia vapor becomes cooler and cooler the farther it goes through the condensing pipes. The force pump at the same time compresses the vapor, until finally, by the compression of the pump and the cooling of the water, the ammonia is changed to liquid again, and is again forced in a minute stream into the cooling-room pipes. Relieved of its pressure and expanding to vapor, the ammonia again takes up heat from the cooling-room, as before, and the process is thus made continuous to produce any desired temperature in the cooling room.

The system thus explained is called the compression system; and this method of using it is called the direct expansion system because the ammonia is expanded (vaporized) within the cooling-room pipes, instead of being vaporized in a tank of brine or other liquid, which liquid, after being cooled by the ammonia pipes, is pumped through the cooling-room pipes, thus performing the operation of cooling indirectly.

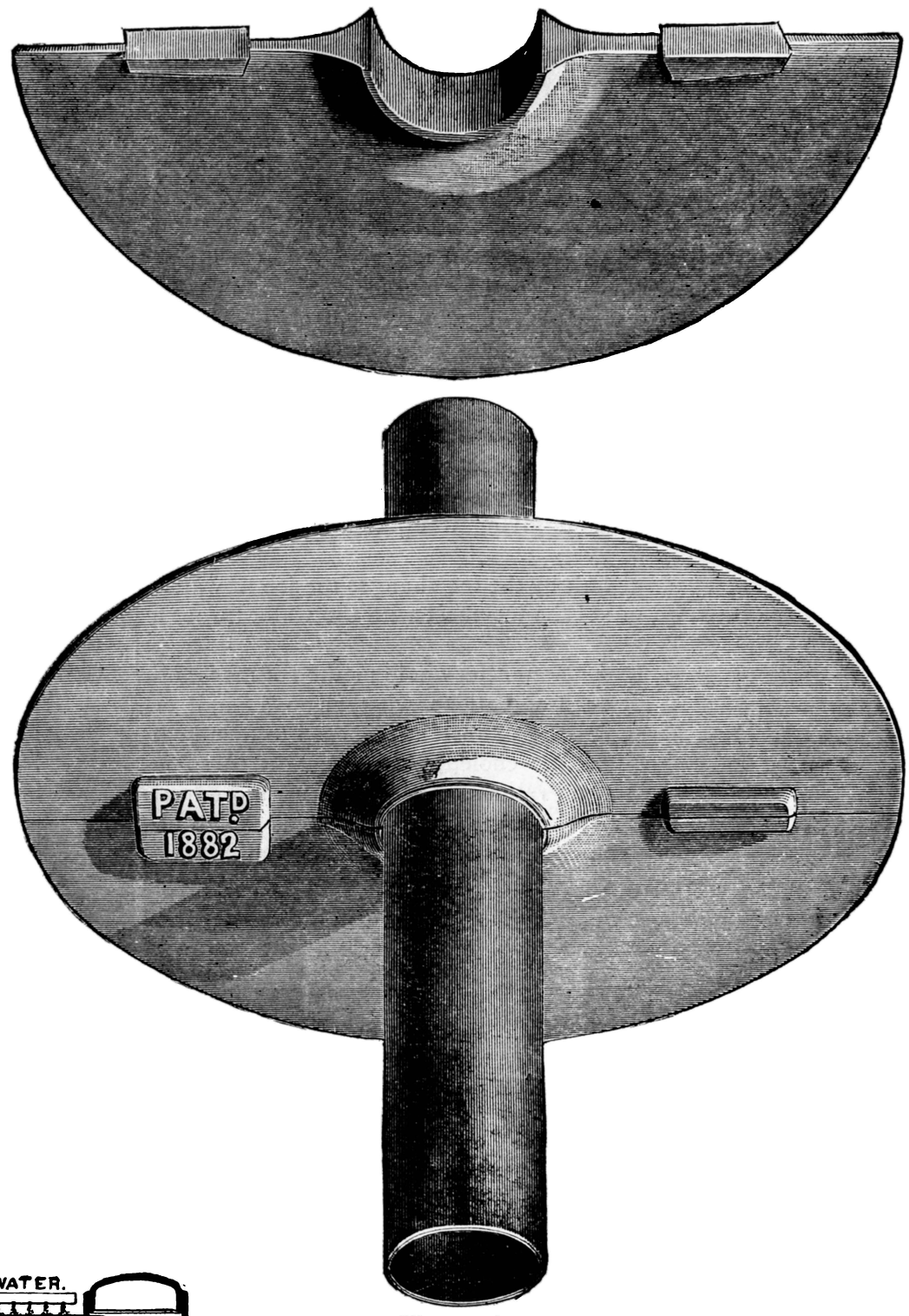

Fig. 3416.

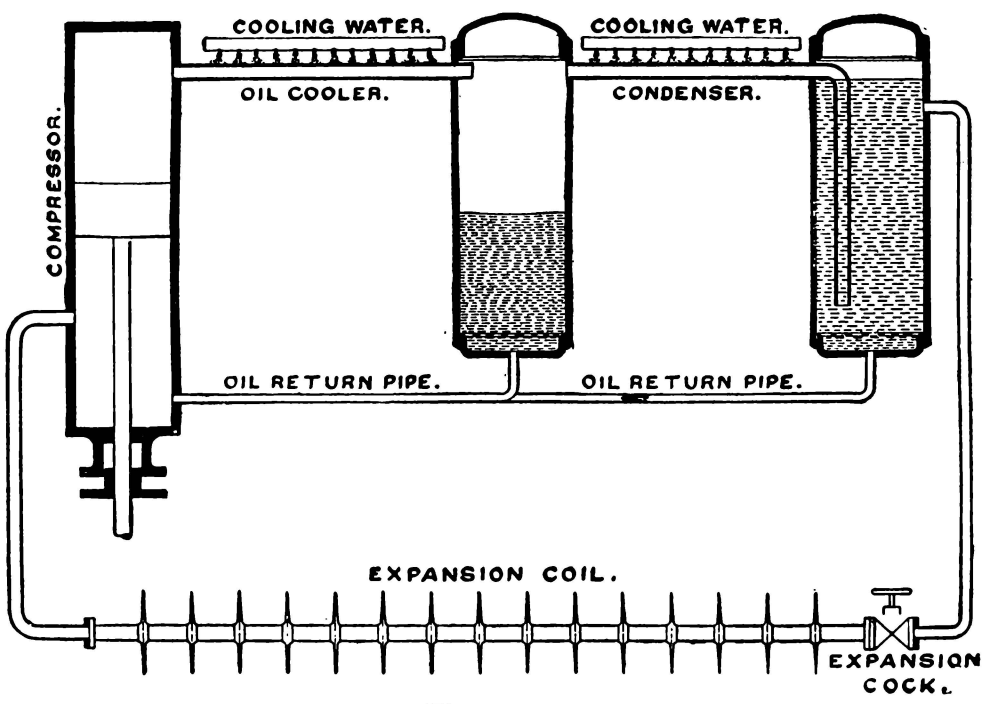

Fig. 3415.

Until recent years the indirect or brine system was generally employed, because of the difficulty of making the pipe connections sufficiently perfect and durable to thoroughly prevent the leakage of ammonia vapor into the cooling room. Later improvements have removed this danger, and to-day hundreds of miles of ammonia expansion pipes are in successful use, and the direct system is coming steadily into favor. Hence this system is first considered.

There are numerous makers of machinery for refrigerating purposes, and their systems of operation are, in general characteristics, very similar. The explanationof one is therefore the explanation of all, except as to the less important details.

Fig. 3415 is a diagram of the De La Vergne direct expansion system. The pipe marked "expansion coil," carrying cooling disks, represents that part of a refrigerating plant which occupies

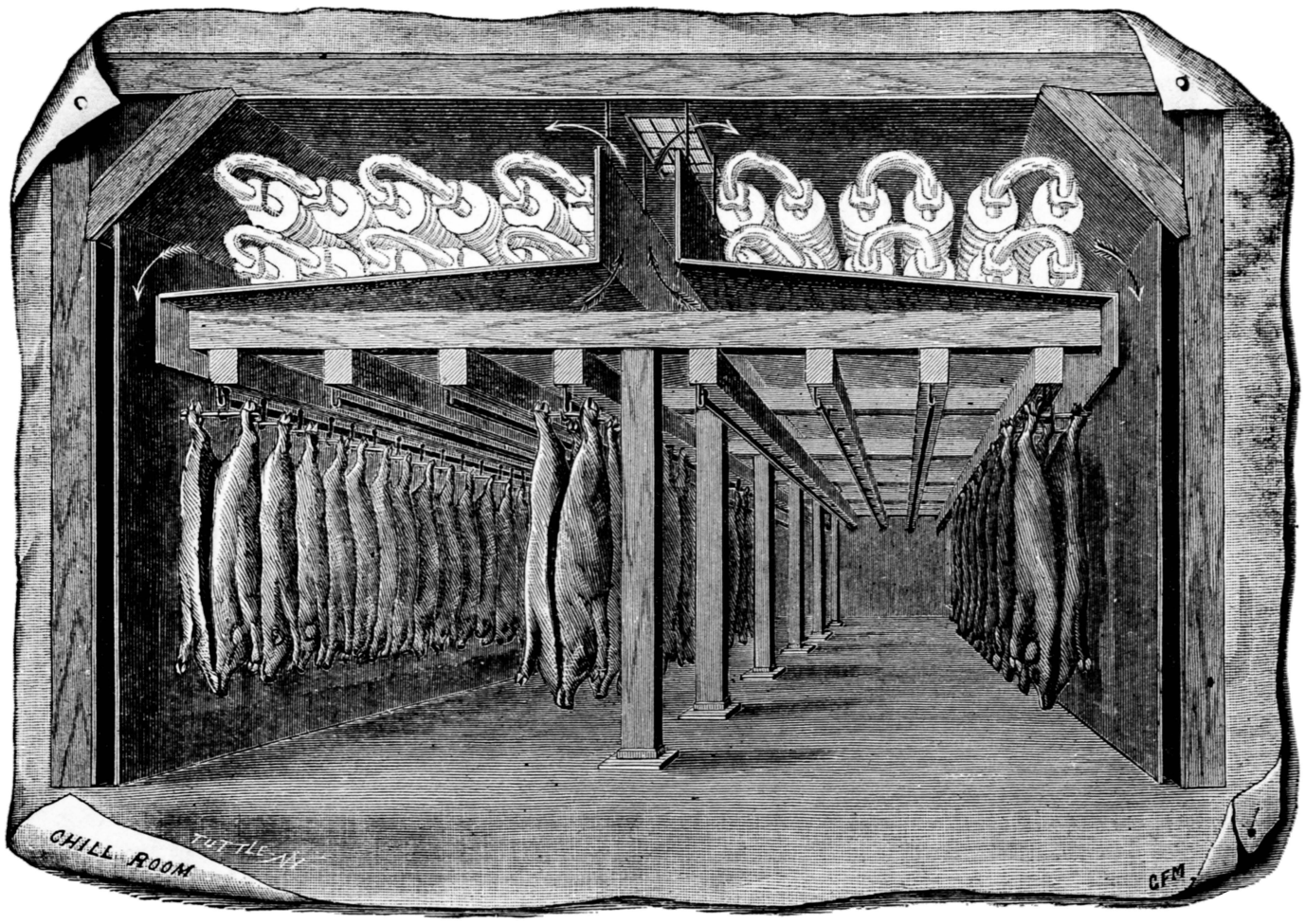

Fig. 3417.

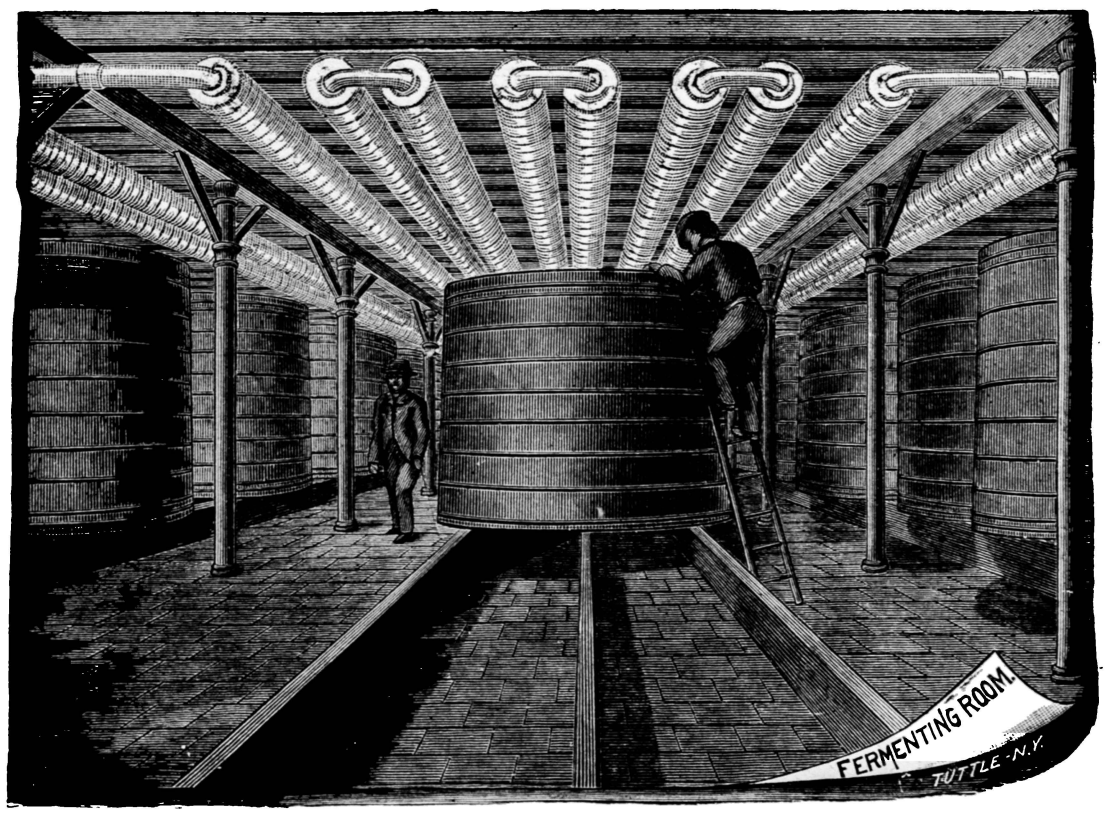

Fig. 3418.

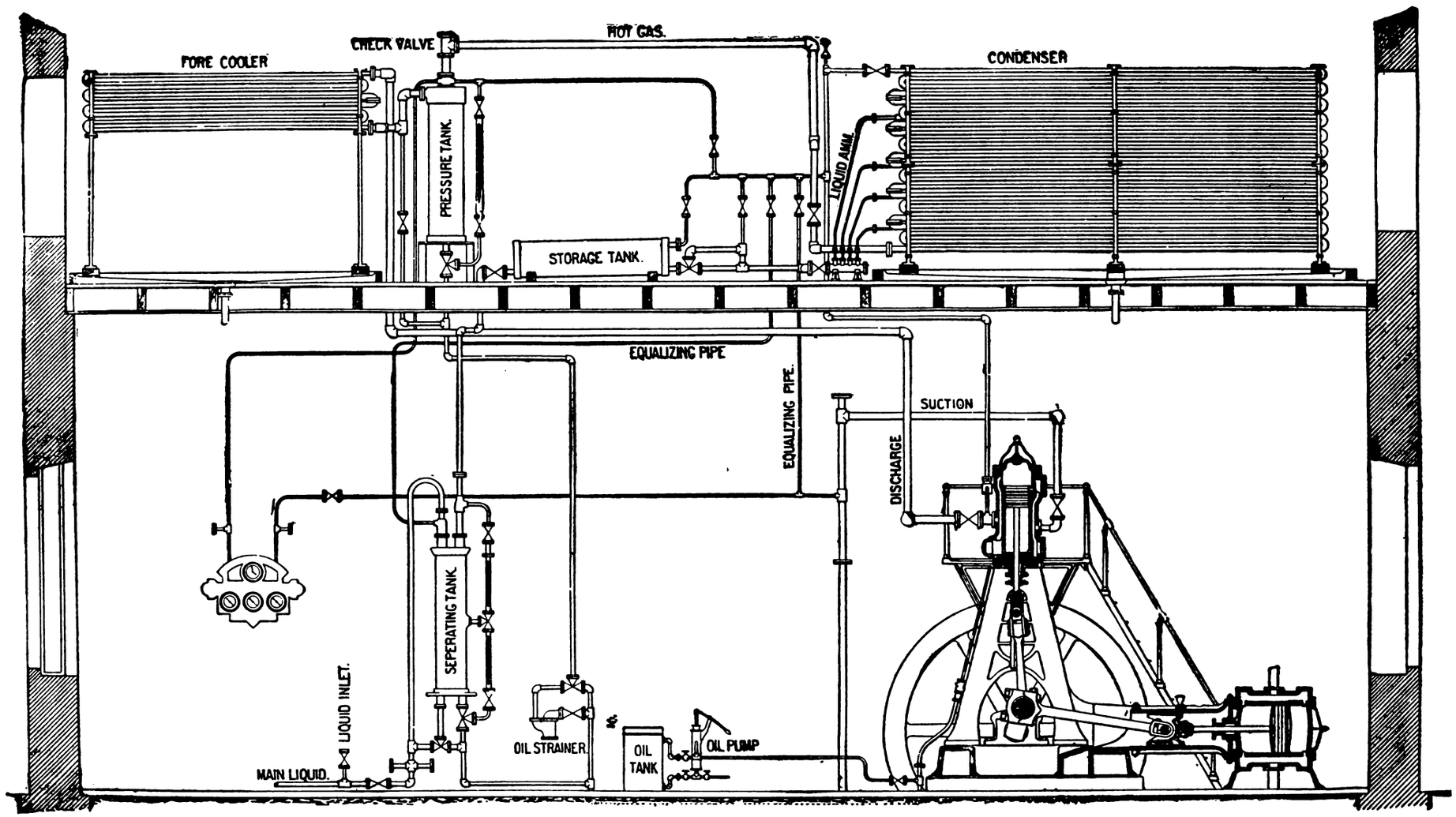
FORE COOLER
CHECK VALVE
HOT GAS.
CONDENSER
PRESSURE TANK.
LIQUID AMM.
STORAGE TANK.
EQUALIZING PIPE
EQUALIZING PIPE.
SUCTION
DISCHARGE
SEPERATING TANK.
LIQUID INLET.
MAIN LIQUID.
OIL STRAINER.
OIL TANK
OIL PUMP

Fig. 3420.

the room to be cooled. The "compressor" represents the force pump which pumps the ammonia vapor out of the "expansion coil" into the outer part of the plant marked "oil cooler" and "condenser." The "expansion cock" at the lower right-hand corner of the diagram represents the point at which the liquid ammonia is forced into the cooling-room pipes ("expansion coil") to be again vaporized or expanded.

It is to be understood that this diagram merely represents the relation of the several parts of the system, or refrigerating plant. That part of the plant occupying the cooling room is so simple as to need few words. It consists of a sufficiently extensive series of pipes to provide the desired amount of pipe surface to cool the air. In the De La Vergne system the actual requirement of piping is much reduced by attaching iron disks to the pipes at frequent intervals, to increase the cooling surface of iron exposed to the air. Fig. 3416 illustrates the manner of attaching the disks to the pipes after the pipes are in place. Each disk is made in halves, upon which are projecting lugs, as shown. Iron clips slipped over these lugs press the halves together against the pipes.

Fig. 3417 represents a "chill room" fitted up with overhead pipes and disks. This plan is preferable in case the room is high enough, because the tight flooring just underneath the pipes conveys away any drip of moisture from the frost surrounding the pipes, without inconvenience to the contents of the room. A still larger advantage is the better circulation of air. The under side of the sloping drainage floor, just under the pipes, naturally conveys the slowly rising warmer air to the central opening through which it rises, and, meeting the roof overhead, is turned to flow outward over the cold pipes and disks. Being thus chilled, and thereby made heavier, it naturally flows downward, along the entire sides of the room, to the lower portion of the room, where it takes on heat from the contents of the room, and, being made warmer thereby, gradually rises again to complete its circuit.

This plan has also the advantage of drying the air of the cooling-room more rapidly and completely, because as the air is circulated more rapidly it passes oftener over the cold pipes, and the moisture is the more quickly condensed and frozen on the disks and pipes than when the expansion coil is placed on the sides of the room or in any other part of the room than the top.

Fig. 3418 shows overhead pipes and disks in the fermenting room of a brewery, and Fig. 3419 a direct expansion Baudelot cooler for cooling wort. The upper series of pipes is cooled by the circulation of cold water through them. The wort, or newly formed beer, in flowing slowly over them, is cooled down to 60° or 70°. It then falls onto the lower series of pipes, which is a direct expansion ammonia coil, and is thereby further cooled to 40° or to whatever temperature may be desired. The pipes recommended for this Baudelot cooler are plain iron pipes instead of copper-covered pipes, as commonly employed ; because when the copper covers are not properly constructed (as often occurs), the thin film of air between the iron pipe and its copper cover acts as insulation, and hinders the cooling process.

Fig. 3420 represents a De La Vergne refrigerating plant with vertical compressor or vapor pump. This figure brings to view the entire refrigerating system outside of the cooling-room, which has been already examined. It is so clear as to need little explanation. In the lower right-hand corner is the engine for driving the compressor, or vapor pump, which is seen supported at the top of the framework above the fly-wheel. The stairway shown enables the operator to reach the pump to give it any required attention.

Just at the left of the engine is seen a pipe marked "main suction pipe." This is the vapor pipe coming out from the cooling room by which the ammonia vapor reaches the vapor pump, or compressor. The "gas and oil discharge pipe" leaves the compressor nearly opposite the entrance of the "main suction pipe." Through this discharge pipe the ammonia vapor and oil (partly liquid, partly vaporized), which has been mixed with it in the compressor, is forced, as shown by the arrows, to the "fore cooler for hot gas and oil," or, otherwise, the "oil cooler," as it is designated in the diagram (Fig. 3415). This latter term is the better one to use in this consideration, since, although the gas or ammonia vapor is somewhat cooled in this coil of pipes, yet the special object of separating these pipes from those of the main cooler or condenser is to so far cool the oil vapor that most of it will liquefy and separate from the ammonia vapor. This is practicable because the vaporized oil will liquefy at a much higher temperature than will the vaporized ammonia.

It will be noticed that the outlet pipe from the oil cooler has a

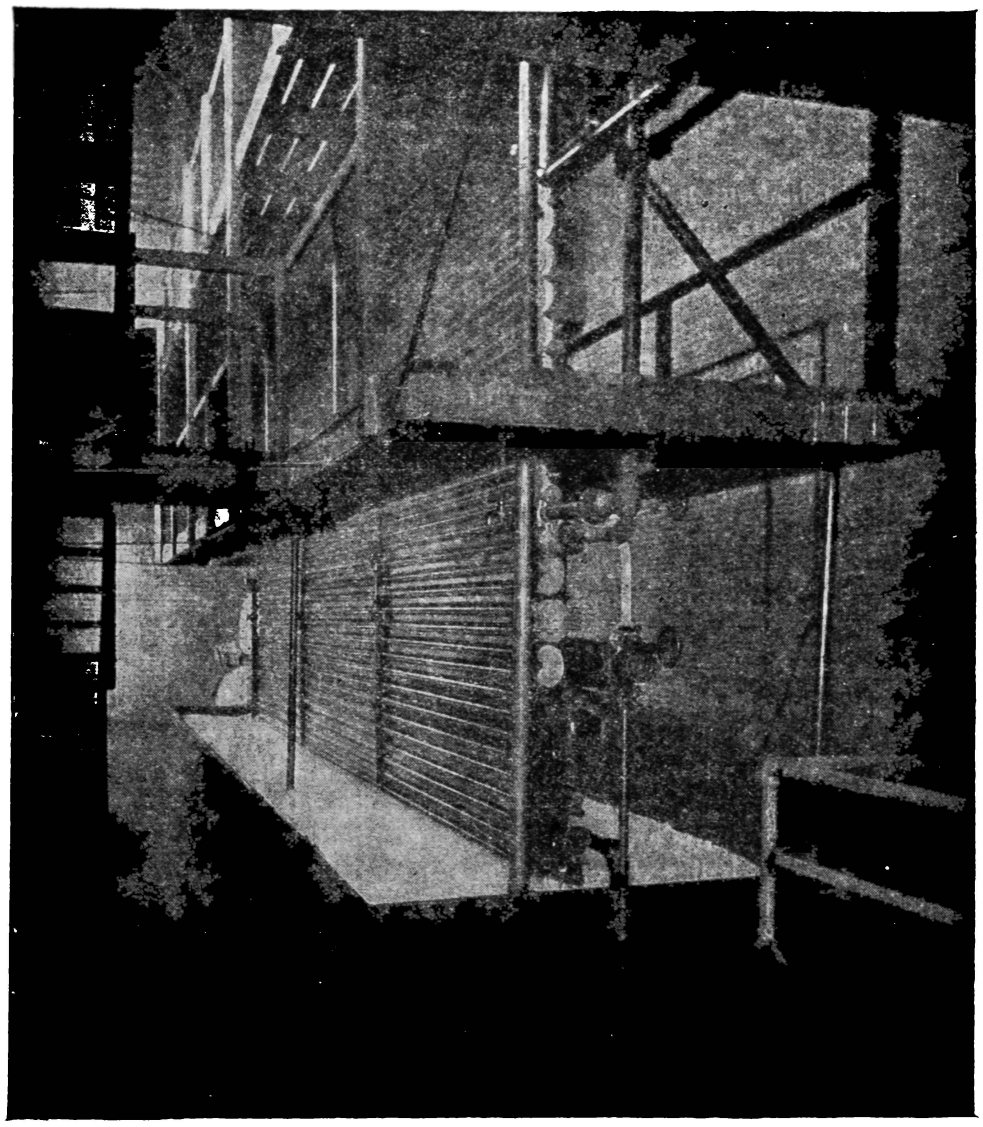

Fig. 3419.

small drainage pipe branching downward between the oil cooler and the "pressure tank." This drainage pipe permits most of the oil, which has so far been forced along with the hot ammonia vapor or gas, to drain away. The gas, thus separated from the oil, passes through the larger upward turn of the connecting pipe into the top of the pressure tank. In the pressure tank any residue of oil which passes over with the ammonia vapor settles to the bottom of the tank, from which it is drained by a pipe connecting with the previously noted oil drainage pipe, as seen, and so continues downward, as indicated by the arrow, to the "oil strainer." From the strainer the oil passes back to the compressor, thus completing its circuit.

Returning now to the pressure tank, the arrows show that the warm vapor passes upward, to the right, and downward, and enters the lowest coil of the "condenser." Although not shown in this figure, yet cold water is constantly showered on the oil cooler and condenser, thus cooling the pipes and the enclosed vapor. This constant withdrawal of heat, together with the great pressure produced by the compressor, condenses the vapor and cools it until, as heretofore explained, it is changed again into a liquid.

At several different levels of the condenser the liquid ammonia is drawn off by the downward sloping drainage pipes, as shown, which converge to a single pipe leading across to the liquid am-

monia "storage tank." The condenser is built up in independent sections so that any section may be isolated (or cut out of operation) for repairs, while all the other sections are working.

From the storage tank the liquid ammonia passes into the "separating tank." Here any possible residue of oil is separated and drained off by a pipe leading to the oil pipe underneath the oil strainer, so that it finds its way into the compressor with the oil previously drained out from the ammonia vapor.

By the pressure maintained in the pipes, the liquid ammonia is forced upward out of the separating tank, then downward through the "main liquid pipe," a continuation of which leads to the "expansion cock" (Fig. 3415) in the cooling room.

At the left of the plant may be seen a group of pressure indicators with connecting pipes tapping the system at various points, enabling the operator to know the pressure in the expansion coil and in the pressure tank, as can be seen by tracing the pipe connections.

The practice of showering cold water over the condenser coil, instead of submerging the coil in a tank, has the following advantages:

1. No film of heated water or collection of air bubbles adheres to the pipes to prevent the extraction of heat.

2. A much smaller amount of water is required, as all of the water used, instead of only a small part of it, comes in close contact with the pipes.

3. If an ammonia leak occurs, it is at once discovered by the odor, whereas in a tank the water absorbs the vapor and prevents discovery.

4. The pipes are readily accessible for inspection, repairs, or painting.

5. Pipe erosion is almost wholly obviated.

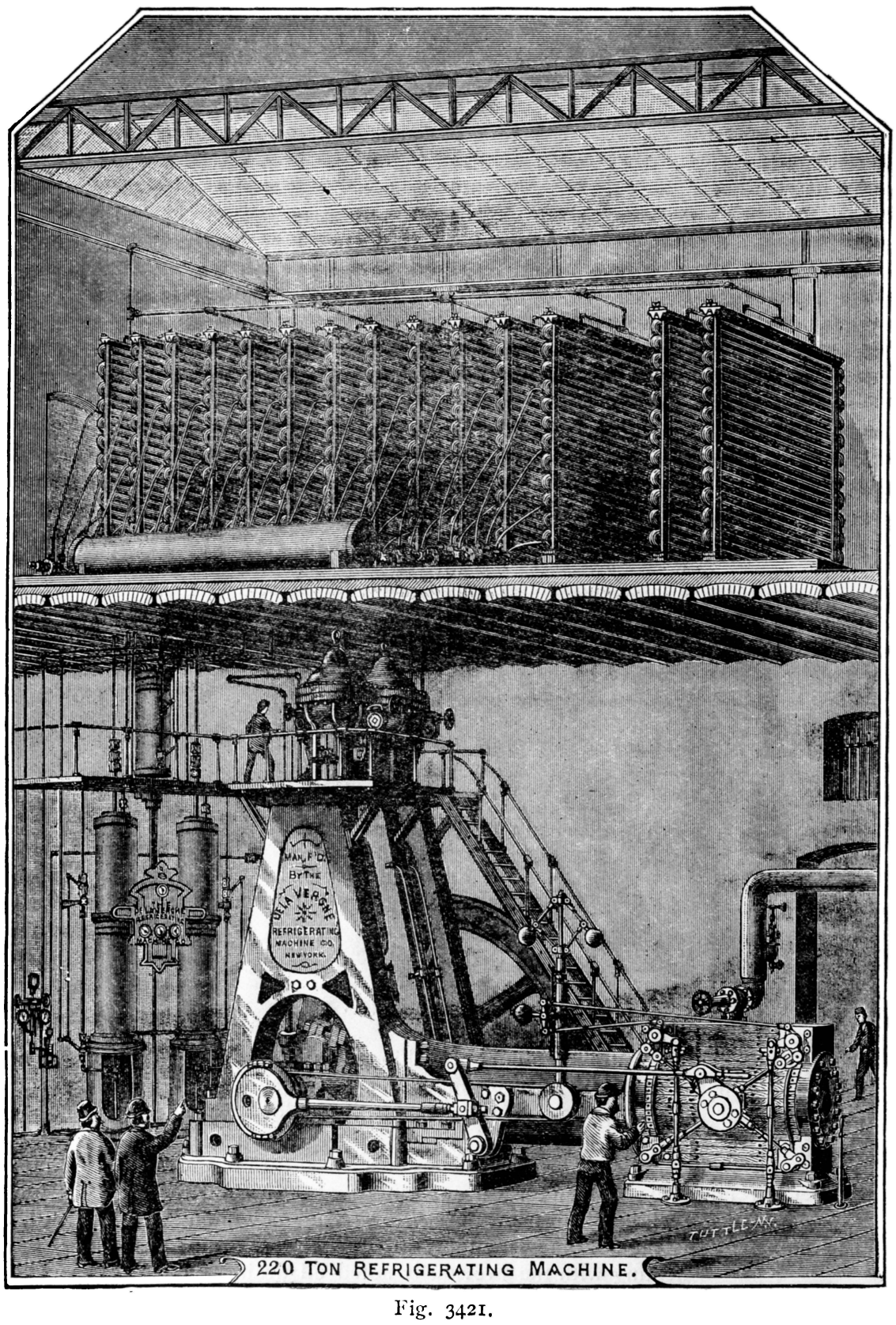

220 TON REFRIGERATING MACHINE.

Fig. 3421.

NOTE: In some cases, as on shipboard, and perhaps in some other instances, economy of space makes the use of a submerged condenser necessary.

The practice of forcing the ammonia vapor into the lowest, instead of into the highest, condenser coil has the following advantages:

1. As the top coil is the coldest of the series, it takes but little heat out of the water, thereby enabling the water to continue to extract heat from the successive pipes, since even at the lowest (warmest) coil the water is not as warm as the coil, and so takes heat from it.

2. Because the water extracts heat from every coil of the series a much smaller amount is required.

3. None of the work done in the upper coils is undone in the lower coils by the action of the water heated to a higher temperature than the coils.

The practice of drawing off the liquid ammonia at several levels, as fast as it is formed, keeps the pipes comparatively clear of liquid ammonia, and so leaves a larger pipe surface operative to cool the vapor.

BRINE SYSTEM.—The difficulty heretofore existing regarding ammonia-proof pipe joints, as already noted, resulted in the general custom of placing the expansion coil in a large tank of brine, instead of locating it in the cooling room. In this practice the evaporation of ammonia cools the brine. By means of a brine pump, and a system of brine pipes in the cooling room, the cold brine is circulated in the cooling room, and the cooling thereby performed indirectly.

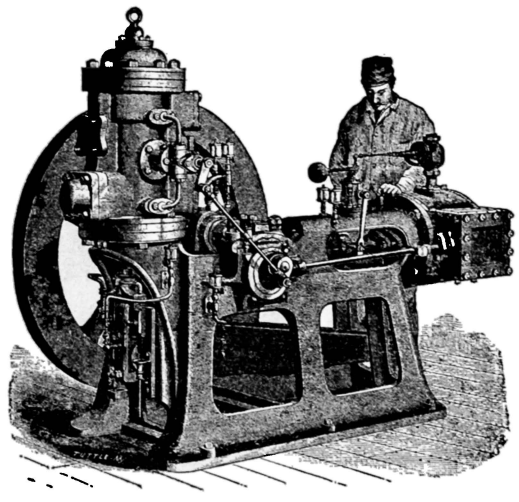

Fig. 3422.

This system is more expensive because of the extra cost of the brine tank and brine pump. More than this, the brine pipes eventually become clogged by slime and rust, which diminishes the effectiveness of the plant; while ammonia has no ill effect whatever on the iron pipes. It is also claimed that there is a saving of twenty per cent. or more by the direct system because of the greater cooling power. The brine system has, however, this advantage: the brine serves as a storage of cold in the brine tank, to steady the operation of refrigeration, so that if the compressor is stopped for any reason the temperature of the cooling room is sustained by the independent circulation of the cold brine.

Returning now to the examination of the mechanism for condensing the ammonia, it is obvious that the engine, fore cooler, condenser, and other parts may be located to suit the building in which they are placed, and the several connecting pipes arranged to suit the respective locations.

Fig. 2421 represents the engine, compressor, and condenser of a De La Vergne 220-ton refrigerating machine; that is, a machine having the capacity to withdraw as much heat from a cooling room as the melting of 220 tons of ice in one day would withdraw. In other words, a machine which will do as much cooling in one day as 220 tons of ice would do.

This engine is of the Corliss type, a full description of which is given on pp. 277 to 283 and 455 to 458 preceding. It is supplied with a by-pass system, by means of which any portion of the pipe system in the engine house may be independently exhausted of ammonia.

Fig. 3422 represents a very compact De La Vergne refrigerating machine made especially for use in ships and such other locations as limit available space to very small dimensions. Its compactness can readily be understood by comparison in height with the figure of the operator. This comparison is made more complete by making the same observation on Fig. 3421, where the figure of the operator also appears.

Since the construction and care of all parts of steam engines has been so fully discussed in Chapters XXXIII. to XL. preceding, the reader is referred to those chapters for all questions of that nature.

A most important feature of a refrigerating machine is the ammonia pump or compressor which withdraws the ammonia vapor from the expansion coil of the cooling room and forces it through the condenser pipes. So difficult was it in the earlier experience of refrigerating to produce a practicable durable compressor that fifteen years ago the absorption system (hereinafter described) was very generally employed. To-day, however, comparatively few absorption machines are made, and practice is rapidly changing to the compression system for nearly all applications of refrigeration.

A chief difficulty was found in the fact that ammonia gas is so thin or attenuated that it leaks past the piston much more readily than steam; and a second difficulty in the fact that even a small amount left in the cylinder clearance space at the close of the piston stroke expands and operates to check the entrance of the vapor of the expansion coil behind the piston as it makes its return stroke. More exact manufacture has diminished these difficulties and the De La Vergne Company claim to have completely overcome both by injecting a small quantity of oil into the cylinder at each stroke of the piston. This provision keeps enough oil in the cylinder at all times to thoroughly seal all the working joints of the compressor, and thereby prevent leakage of ammonia vapor; and also, at the same time, to completely fill the clearance space at each end of the cylinder, and thereby make it impossible for any vapor to remain and reëxpand in the cylinder.

Fig. 3423 presents a sectional view of the De La Vergne double-acting vertical compressor. At the left is "suction" channel or inlet, by which the ammonia vapor from the expansion coil of the cooling room enters the cylinder of the compressor. It is seen that the suction channel has two admissions to the compressing cylinder, one at either end. Each of these admissions is guarded by a spring-seated valve so placed that pressure from within the cylinder acts to close it, and pressure from within the suction channel acts to open it.

At the right is the "discharge" channel through which the compressed ammonia vapor is forced out into the fore cooler and condenser coils. The cylinder, it will be seen, has two exits into the discharge channel, one at either end of the cylinder. It is also seen that each of these exits is guarded by two spring-seated valves, so constructed that they open by pressure from inside the cylinder. All of the valves, it is obvious, are readily accessible by simply removing their respective caps.

By providing two discharge valves at each exit, the valve motion is greatly reduced, and hence the adjustment, which is necessarily very accurate, is less disturbed by their actual operation. It will be noted also that each discharge valve is seated by two spiral springs, one acting on the back of the valve seat direct and one on the outer end of the valve stem, thus doubly providing for perfect seating and accurate movement. This extra precaution is well taken, because the discharge valves open only under a pressure of from 125 to 175 pounds per square inch, while the inlet

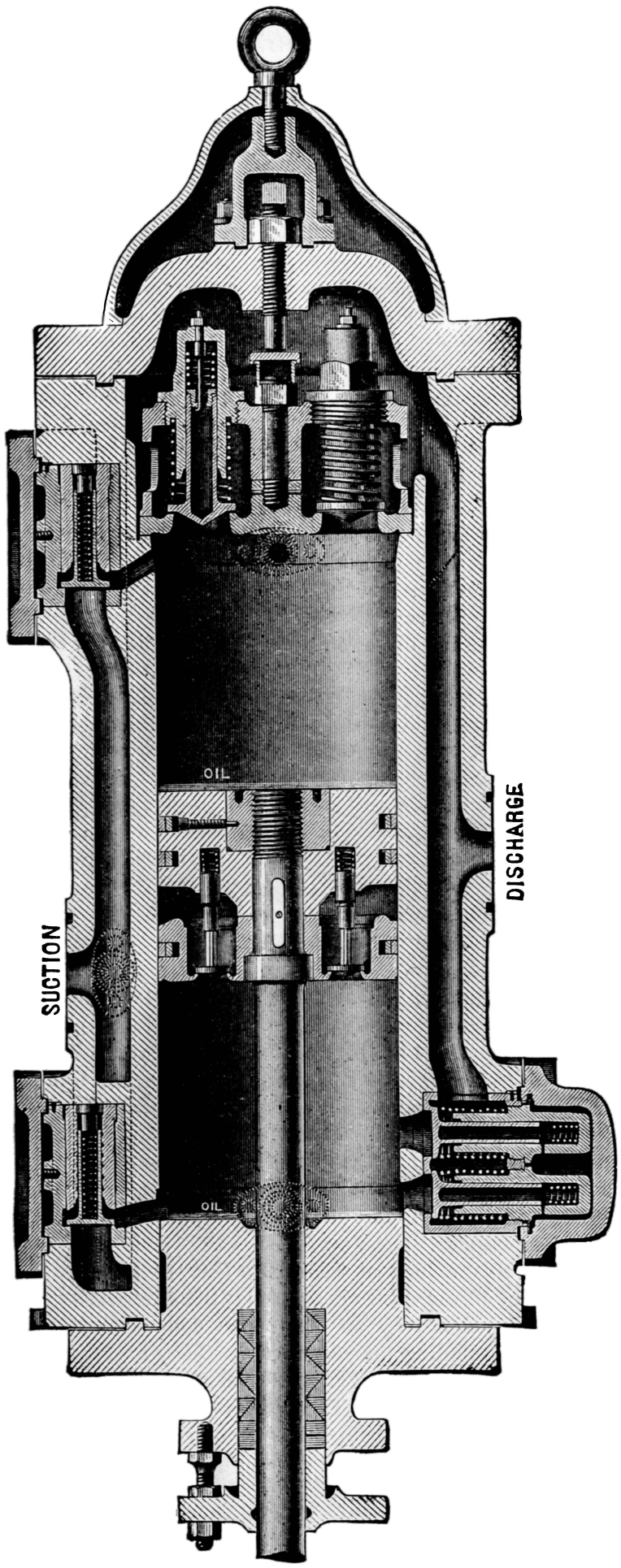

Fig. 3423.

valves open under a pressure of from 10 to 30 pounds per square inch.

Now suppose the piston, as represented in the figure, to be making its upward stroke. The ammonia vapor is entering the cylinder from the expansion coil of the cooling room by way of the lower end of the suction channel. The vapor above the piston is being compressed, and consequently is closing the spring valve at the upper end of the suction channel more and more tightly as the piston ascends. At the same time the increasing pressure is

tending to open the two discharge valves, and whenever the cylinder pressure exceeds that in the discharge channel (and condenser pipes), the discharge valves will open and the compressed vapor will be forced out into the discharge channel to begin its journey through the condenser pipes.

The return stroke reverses action in all respects, and the mechanism affected differs only in the arrangement of the two lower discharge valves. It will be noticed that as the piston descends it closes the outlets of the two discharge valves before it has quite reached the bottom of the cylinder. It will also be seen that there are two discharge valves within the piston whose chambers communicate with a channel encircling the piston, and which is at the right point to open into the outlet to the upper one of the two main discharge valves as the piston descends to its lowest point. Therefore, as the outlet to the lower discharge valve is closed by the piston, the oil and vapor underneath the piston open the discharge valves within the piston and find a passage to the upper discharge valve by way of the channel encircling the piston.

The layers of oil shown in the figure merely represent the oil as it would appear at rest after the action of the piston had ceased. In operation it is injected into the cylinder in advance of the piston after it has begun its stroke from either end. It therefore does not reduce the vapor capacity of the cylinder, as it is injected after the vapor has ceased to enter on that side of the piston. At the same time, it is by the constant motion of the piston spread over the entire surface of the cylinder and the faces of all the valves, and it is therefore distributed to all parts of the compressor, instead of resting, as represented, in two placid layers. As the piston moves in either direction, it scrapes the oil from the inner surface of the cylinder, and at the last point of its stroke collects it at either end somewhat as represented at the lower end. This oil, therefore, serves to fill the cylinder clearance, leaving no vapor whatever to reëxpand and act as a check to the free admission of vapor from the expansion coil through the suction channel.

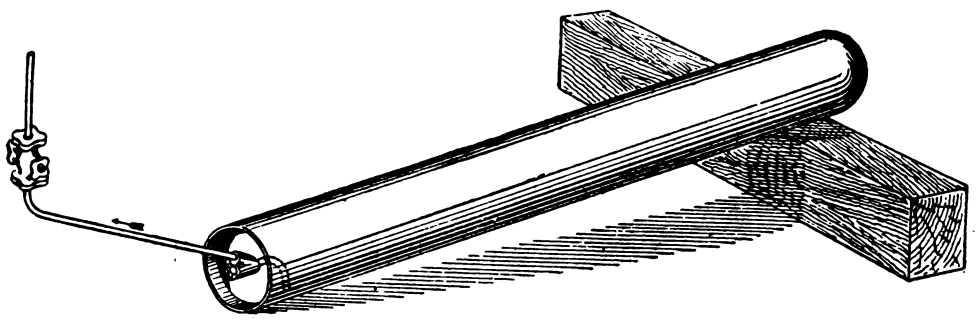

Fig. 3425.

Not only does the oil fill all the cylinder clearance space, it also fills all the irregular openings at the inlets and outlets, and, more than that, a portion of the oil is, at each stroke, forced out with the condensed vapor, to be afterwards separated therefrom as heretofore explained.

More than this, a look at the figure (3423) will show that the construction of all the valves is such that their respective seatings are constantly covered by an oil deposit collected by gravity in the pockets surrounding the valve seats. They are, therefore, all sealed by a body of oil to give additional perfection to the most careful valve construction. These devices, therefore, wholly overcome the leakage or backward movement of ammonia vapor, so that the compressor is enabled to do full work at every stroke in either direction.

Another service performed by this injected oil is that of cooling the compressor, and absorbing the heat developed in the vapor by compression. It does this because in its circuit after leaving the compressor it is first cooled in the fore cooler, or oil cooler, and further cooled in the rest of its circuit so that when injected into the cylinder it is several degrees cooler than when it left the cylinder at the beginning of its journey. Nor is it to be forgotten that this use of the oil so thoroughly lubricates all parts of the compressor, including the valves, that the durability of the machine is greatly increased.

A double-acting horizontal compressor is also manufactured, but its efficiency is less than that of the vertical compressor, because no oil is circulated except a supply to the stuffing box of the piston rod. Therefore, a small amount of ammonia vapor remains in the cylinder to reëxpand after each stroke of the piston; and this compressor is only recommended when, because of upright space or for some other reason, a vertical compressor cannot be employed.

The achievement of absolutely expelling all ammonia vapor from the compressor cylinder at each stroke of the piston adds another large element of efficiency to this system; because, since there is no back pressure produced by reëxpansion of compressed vapor in the cylinder, the full cylinder capacity is utilized at every stroke to take in ammonia vapor from the expansion coil. By this means the ammonia vapor is completely forced into the condenser, and therefore the cooling capacity of a given compressor or machine is increased. The oftener the ammonia is liquefied and vaporized, the more heat it takes out of the cooling-room. That means a corresponding saving in fuel, and the wear of the engines and other machinery.

When the pipes are once charged with ammonia, no recharging is required, because with ammonia-proof joints and no leakage of vapor at the compressor there is no loss of ammonia, and a single charge is continuously effective. In making the original charge, and in recharging because of accident, or for any other reason, the liquid ammonia tank should be placed in the position illustrated in Fig. 3425. Connection with the inlet cock of the system should be made, and the valve of the ammonia tank cautiously opened to test the connections. When these are found to be perfect, open the tank valve fully, start the machine, and run slowly until the tank is empty. Frost begins to appear on the tank when it is nearly empty, and when the suction gauge registers atmospheric pressure, and holds at this pressure after the machine is stopped, the tank is empty. If the gauge does not hold at atmospheric pressure, start up again, and run until it does hold. In disconnecting, close first the tank valve and then the inlet cock of the system. Each standard tank contains from 100 to 110 pounds of ammonia. Because of this variation, each tank should be weighed both before and after emptying, and a record of weights be made.

THE ABSORPTION SYSTEM.—Instead of using a compressor to empty the expansion coil and force the ammonia through the expansion cock into the expansion coil, the affinity of water for ammonia vapor may be used to empty the expansion coil, and the pressure generated in a "still" where the ammonia water is boiled is used to feed the liquid ammonia through the expansion cock. This plan of operation is called the absorption system and is explained in general as follows:

The incoming end of the expansion coil opens into an enclosed tank of weak ammonia water, or aqua ammonia. This tank is called an absorber, because the weak aqua ammonia absorbs the ammonia vapor very rapidly. This causes a constant inflow of vapor from the expansion coil. To keep up the circulation, the strongest part of the aqua ammonia (the upper level) is constantly pumped out of the absorber into a "still" or boiler. The heat drives the ammonia out of the water in the form of vapor. With the ammonia vapor there passes off also a small portion of watery vapor. These mixed vapors pass from the still into an analyzer where the watery vapor is condensed into water and fed back into the still, while the pure ammonia vapor passes on to the condenser, where, as heretofore described, it is liquefied. The weak aqua ammonia (the lower level) is constantly pumped or drawn from the still and returned to the bottom of the absorber; and uniting with the incoming vapor serves to keep up the circulation at that end of the system.

This system, it is claimed, is especially adapted to use upon an extensive scale in supplying a large number of customers from one central point.

A PIPE-LINE SERVICE.—Within the past few years the International Cooling Company of New York have put in operation street pipe-line refrigerating plants in New York City, Brooklyn, N. Y.; Atlantic City, N. J.; St. Louis, Mo.; and Denver, Colo.

These plants are an extended application of the operations already explained. The expansion coil, instead of being all in one room or in the several rooms of one building, is distributed

in numerous buildings scattered throughout the area covered by the street pipe-line extension.

The street pipes are laid in the ground in the same manner as gas and water pipes are laid, and consist of (1) an ammonia pipe for carrying the liquid ammonia from the liquid ammonia storage tank to the refrigerators of customers along the line. (2) A much larger pipe for bringing the ammonia vapor back to the still; and (3) an empty pipe, having numerous connections with each of the others, by means of which any desired section of either of the others can be emptied without stopping the flow of either the liquid ammonia or the vapor throughout the general service, or interrupting the general operations. Also this third pipe affords a by-pass for any section of the other two pipes throughout the whole street line service.

Suppose, for example, a new customer is to be admitted to the service. After his cooling room or cooling box (whichever it may chance to be) is provided with its expansion coil, a liquid ammonia connection must be made with the liquid ammonia street pipe. By opening and closing the proper cocks in the street system, the liquid ammonia is compelled to leave the regular pipe and flow through the third pipe for a short distance, leaving a section of the regular pipe empty while the connection is made. Then the liquid ammonia is again permitted to flow through the regular pipe section as before. Connection with the street vapor pipe is made in the same manner, and the new customer is thereafter in the regular service, and his cooling room (or cooling box) is automatically cooled by simply adjusting the expansion cock to give whatever temperature is desired.

The customers along the street are supplied with either direct refrigeration or with the brine system, as desired. If a supply of ice-cold water to be drawn from faucets on the several floors of a building be desired, the plan illustrated in Fig. 3426 may be adopted. In this case the ammonia expansion pipes are located in a water tank, and the expansion cock adjusted to a temperature which will, under ordinary conditions, keep a body of ice frozen about the pipes constantly, as shown in the figure. In the lower part of the water tank is a coil of water supply pipes through which water flows from the street to the several faucets to be supplied.

These water supply pipes being of large diameter contain a considerable volume of water which is cooled by the surrounding freezing water of the tank to quite as low a temperature as ordinary ice water, unless drawn out very rapidly. That rarely happens, however, if the service cocks are self-closing, as the water drawn from these pipes is used for drinking only.

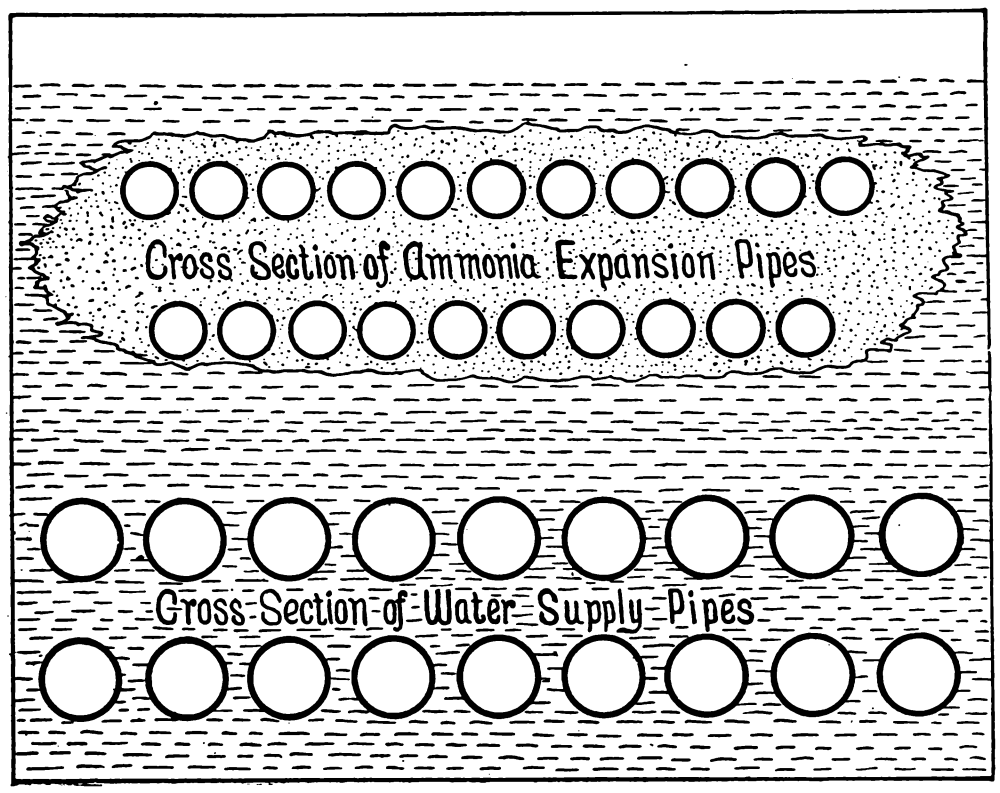

Fig. 3426.

Each expansion cock may be provided with a thermostat regulator which automatically shuts off the supply of ammonia to the expansion coil at one degree colder than the desired temperature, and opens the valve at one degree warmer. Each customer is therefore supplied with the temperature required for his particular purpose or purposes (several differing temperatures often being supplied in one hotel, restaurant, or dwelling, to serve several varied requirements), without any attention on the part of the customer.

The cost is as small or smaller than for the same amount of refrigeration with ice; and the near future will probably witness a large expansion of this plan of refrigeration.

Brine cooled by the compression system is also circulated in street pipe lines covering small areas, and not available for public use.

ICE MAKING.—In spite of the rapid development of cooling without ice to take the place of the great ice bunkers of past years, the demand for the smaller supplies in cities, suburban districts, and isolated rural towns increases so rapidly, and the superiority of manufactured ice over ice as it commonly forms in ponds or lakes is so marked, that the manufacture of ice is also rapidly increasing.

The proportion of refrigerating machinery employed in ice making as compared with that employed in the other branches of refrigeration may be judged from the proportions of such machinery supplied by a leading manufacturer. Their total shows a refrigerating capacity of over forty-three thousand tons daily. Over thirty thousand tons (nearly three-fourths of the whole) are employed in the cooling processes in breweries. Four thousand one hundred tons (about one-tenth of the whole) are employed in ice making. Abattoirs and packing-houses employ about three thousand six hundred tons, and markets and cold-storage houses employ nearly two thousand five hundred tons. The remainder (less than twenty-eight hundred tons) is scattered among nearly twenty other various classes of service.

This comparison is dated August 1, 1898. The year following—at the present writing nearly closed—has so far developed a phenomenal increase in the relative demand for ice-making machinery, so that the present outlook is for a much larger proportion in future years. Because of this fact, and because of the additional mechanism required in the actual freezing and handling of ice, it is proper that this special application of refrigeration be separately considered.

When water is sufficiently cooled, it becomes ice. The process of cooling either air or water has already been fully described. It is therefore unnecessary to return to that part of the subject. To make a cake or block of ice, all that is necessary is to fill a can with water and put it where the temperature is below the freezing point of water. To remove the ice from the can, all that is required is to warm the can until the outside of the block of ice melts and the block slips out.

From what has been already learned, it is obvious that a series of expansion coils could be made to cool the air in a room until water standing in metal cans in the room would freeze. It would be very difficult, however, to remove the cans and replace them without admitting so much warm air (in the summer season, when ice is required) as to make the operation very expensive. Therefore, instead of cooling a room full of air, the ice manufacturer cools a great tank of brine extending entirely underneath the floor of a large room called the tank room. This tank is only deep enough to accommodate the depth of the cans used, as indicated in the accompanying table:

STANDARD ICE CANS OR MOULDS.

Weight of Blocks.	Size of Cans.	Time of Freezing.
50 lbs.	6 ins. × 12 ins. × 26 ins.	20 hrs.
100 "	8 " × 16 " × 32 "	36 "
150 "	8 " × 16 " × 42 "	36 "
200 "	11 " × 22 " × 32 "	60 "
300 "	11 " × 22 " × 44 "	60 "
400 "	11 " × 22 " × 57 "	60 "

The time of freezing is with 18° brine.

Series of expansion coils are erected at frequent intervals all through this brine tank, and therefore the brine, which entirely covers the coils, is very quickly cooled down to about 18°. That is about fourteen degrees colder than the freezing point of water.

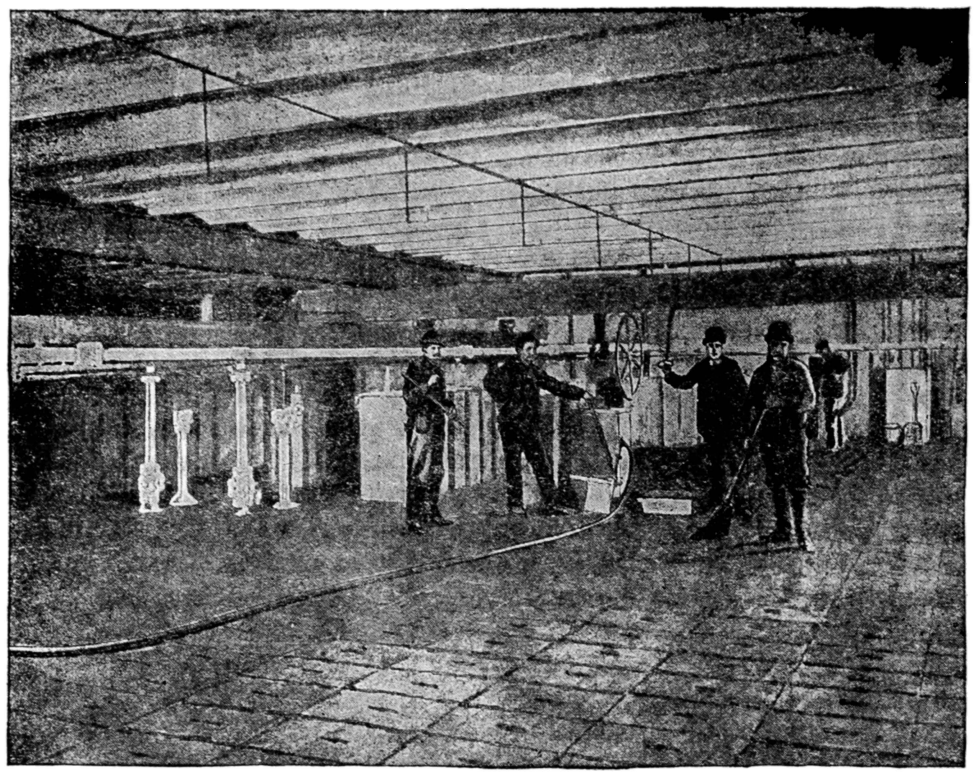

Fig. 3427.

Even at this temperature the brine does not freeze (solidify), and hence the cans are readily lifted out and replaced.

In the intervals between the expansion coils, hundreds of galvanized iron or steel cans filled with water are suspended. They are placed as closely together as convenience of handling will permit, and a trap door over each can gives access to it. In fact, the floor of a tank room seems to be nothing but trap doors throughout its whole extent, as seen in Fig. 3427, which is a view of a tank room ; while Fig. 3428 shows one of the cans just lifted out of the tank after from 36 to 60 hours' freezing (see table),

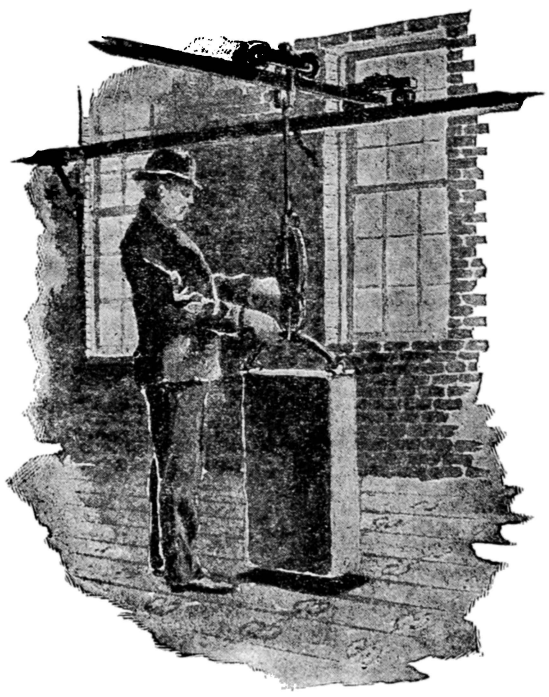

Fig. 3428.

ready to take its short journey to its bath (or sprinkle) of warm water, where, placed with its mouth downward, it will shortly let go of its block of ice, which will slide into its carrier, which will convey it to the storage room, Fig. 3429, ready for removal to the anteroom, and thence to the ice wagon. In the top of the storage room may be seen a set of expansion coils and disks which keep the air cool enough to prevent thawing the stock of ice, which at times is very large.

In the early experience of ice making it was impossible to make clear ice rapidly, because the air contained in the water was squeezed into little bubbles by quick freezing, and these bubbles were caught in the formation of ice crystals, making the ice "snowy." It was later discovered that if the water was agitated while freezing, these air bubbles escaped and the ice was clear. Several devices were planned for stirring the water, but they were not practical, because of the liability to be frozen fast in the block of ice. Shaking the cans was then resorted to, but the great amount of machinery required to keep thousands of cans in motion was both expensive and cumbersome.

At last the plan of using distilled water (which contains no air) was adopted, and thereby rapidity of manufacture and transparency of ice were secured. The ice was also free from all impurities, because distilled water is pure water. The process of distillation increased the expense, and to overcome that objection the condensed steam, distilled water from the steam boilers of the refrigerating plant, is now used, instead of that produced by independent distillation. To do this requires special apparatus for removing the oil from the steam ; for a large part of the steam used is that which has passed through the engines, in the cylinders of which oil is freely used for lubrication, and the hot steam picks up and carries with it a portion of the oil.

This apparatus is similar in action to that employed for removing oil from ammonia vapor already described on page 499. It is, however, much more thorough, having in addition both a steam filter and a deodorizer, so that the steam, cleaned of oil, filtered, deodorized by a perfected chemical process, and condensed to pure water, and then reboiled to exclude any air picked up in the preceding processes, makes a block of pure crystal ice, having just a trace of snowiness where the final crystallization takes place. This indicates that in the process of pouring the distilled water from the storage tank into the freezing can, and in standing from one and a half to two and a half days in freezing, it reabsorbs a small quantity of air, which is finally caught in the doubly rapid freezing as the two ice plates formed on the opposite sides of the can meet and unite in the hastened freezing of the last moments of the operation.

Another method of making ice is to fill a very large tank with the water to be frozen, having at suitable intervals within the

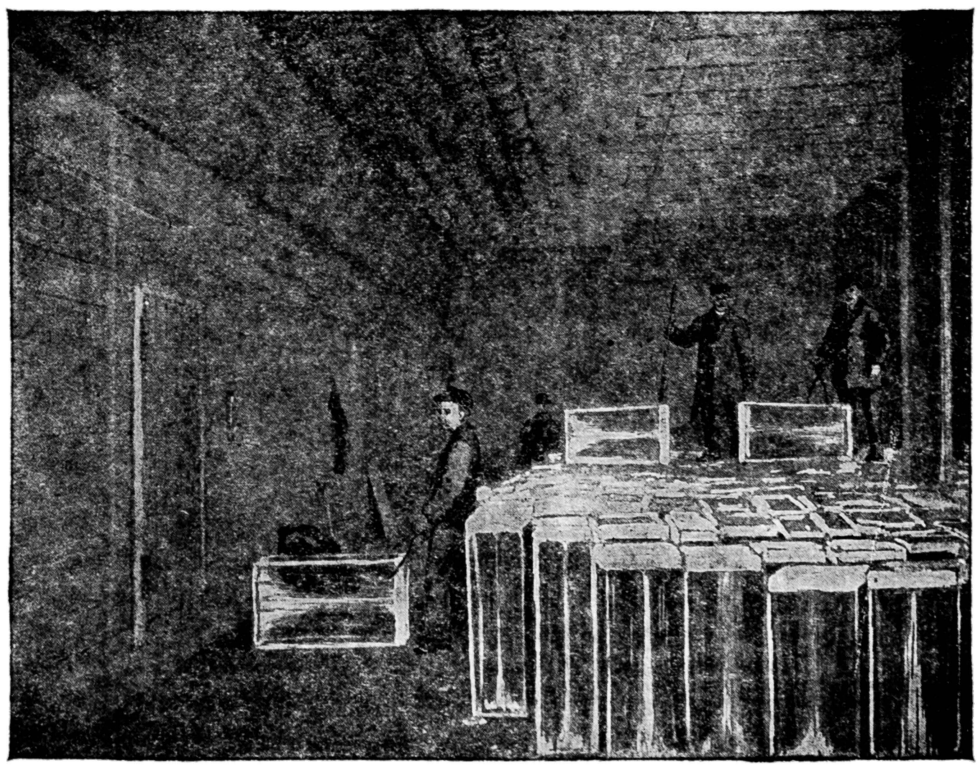

Fig. 3429.

water tank thin stationary brine cans having very large sides. The brine within the cans is cooled by expansion coils, either within the cans or in a separate brine tank outside, from which the brine is pumped into the cans. Ice forms on the perpen-

dicular outer sides of these brine cans, one plate on each side, which increases in thickness according to the length of time the process is continued. When the ice is as thick as desired, the cold brine is pumped out of the cans, and warm brine substituted until the ice plates loosen from the sides of the cans. These plates, weighing one or more tons each, are then hoisted out of the water tank in which they float, after being thawed loose from the brine cans, and are cut up into convenient blocks for handling, and taken to the storage room.

Instead of brine cans, closed air cans may be used, with an expansion coil in each can to cool the air down to below freezing. When it is desired to thaw the ice plates loose, hot ammonia vapor is circulated in the expansion coils, and the air within the closed cans is thereby heated. The cans are thus warmed and the ice plates thaw loose.

This method of freezing from one side only requires nearly four times as many hours for the same weight of ice with the same refrigerating power. It has the advantage of forming transparent ice without using distilled water. It is, however, little used as compared with the removable ice-can system first described.

A third method employs stationary ice cans (or cells, as they are called) of large dimensions, having hollow walls into which cold brine is pumped until the freezing is completed. Warm brine is then substituted until the ice is loosened, and the great cake or block is lifted out and cut up into pieces of convenient size for handling. This method is, however, little used, as the removable ice cans are more generally finding favor with experienced manufacturers.

INSULATION.—To provide means for the cooling rooms for the storage of perishable articles, or for any other purpose, or for cooling great tanks of brine to be used in the manufacture of ice, and not to protect those rooms or tanks against the heat of their surroundings, would be to but half do the work, and, therefore, to totally waste much of the cost of the refrigerating plant.

Every one knows that heat rapidly passes out of houses in winter even when the doors and windows are kept tightly closed. So, in summer, heat rapidly passes *into* cooled rooms through the walls, ceilings, and floors, from all the surroundings, unless prevented by careful insulation.

Moving air carries heat with it even though it be in such small streams as flow through common porous bricks and more rapidly still through the many openings in the imperfect joints of ordinary wooden buildings. Plainly, then, one of the first things to do is to make the walls, floors, and ceilings of a room to be cooled as nearly air tight as possible. One or two coats of pitch will make a brick wall, floor, or ceiling air tight. Building paper properly and carefully lapped and securely held in place by a closely jointed lumber covering, will make ordinary wooden built rooms air tight.

While moving air carries heat, air tightly enclosed to prevent circulation is an unequalled hindrance to the transfer of heat. Therefore, after making the walls, floor, and ceiling air tight, to prevent the circulation of air through them, the next step is to prevent the radiation of heat from their inner surfaces. This is accomplished by building against them a series of non-conducting shields separated by shallow air spaces.

Minerals and metals conduct heat rapidly. Wood is so poor a conductor or so good a non-conductor that, while one side of an inch board is a red-hot burning coal, the other side will be cool until the fire has burned very deep. Therefore wood is one of the most effective non-conducting materials available for building shields.

It, of course, goes without saying that doors of cooling rooms should be closed as continuously as possible, and windows (if any) should be provided with double or triple sashes tightly fitted and never opened.

All insulating material should be free from unpleasant odors and at the same time comparatively inexpensive; therefore odorless paper should be selected. Pitch is to be preferred to paint both on account of odor and durability. Spruce lumber has a pleasant odor, and a resinous quality resisting mildew, and is comparatively inexpensive in most localities.

It is to be understood that triple insulation means three air chambers, and double insulation two air chambers, for *side* walls.

The following illustrations and directions apply to a temperature of from 36° to 40°, to be maintained in the cooling room.

Fig. 3430 illustrates an effective triple insulation for brick side walls, in case the difference in temperature (inside and surrounding) is to be greater than 20° under ordinary conditions. The brick wall is first covered with two coats of pitch to exclude air and moisture. One inch or 1½-inch strips of spruce are next fastened to the wall (horizontally), at intervals of not more than two feet. Against these is built the first shield, which consists of two thicknesses of ⅞-inch spruce boards "tongued and grooved," and joints laid in white lead. Between the two thicknesses of boards is interposed a layer of odorless insulating or building paper carefully lapped at all joinings. The boards of the inner thickness should carefully "break joints" with those of the outer thickness, and the boards should run in the same direction on both sides of the paper, so that no board joints on one side shall cross those on the other side. All corners should be carefully protected by triangular wooden strips having a separate piece of paper between each strip and the corner which it protects.

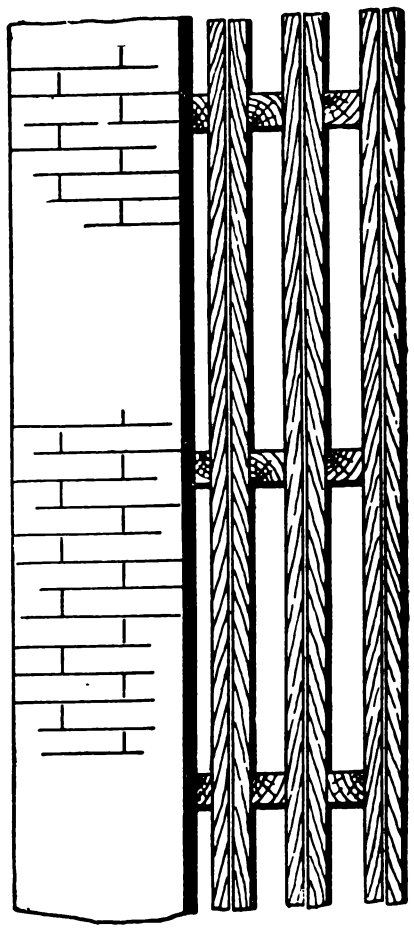

Fig. 3430.

The second and third shields are to be built in the same manner as the first and separated by 1½-inch horizontal strips placed opposite the wall strips.

Fig. 3431 illustrates the insulation for a brick floor or ceiling, corresponding to the triple insulation for side walls. A layer of concrete, extending two inches above the tops of the iron beams, is

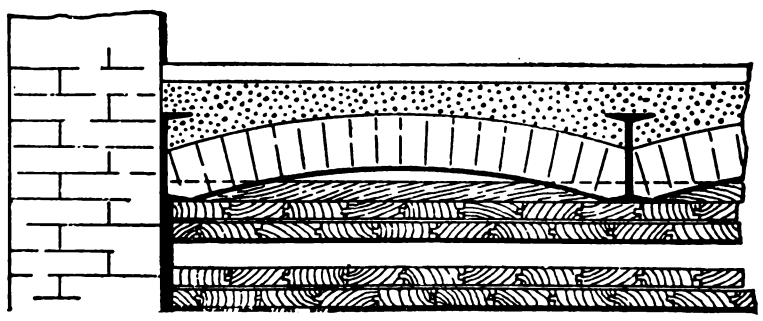

Fig. 3431.

overlaid with one inch of asphalt. Underneath the beams two wooden shields are built, corresponding to those already described for the side walls.

Fig. 3432 shows a triple insulation (or its equivalent) applied to a *wooden* floor or ceiling. Underneath the floor beams, and

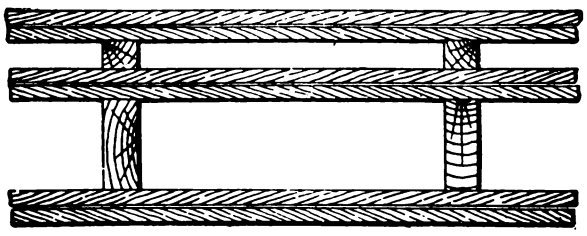

Fig. 3432.

attached directly to them, is one insulating shield. Over the floor above is placed a layer of insulating paper, covered by a layer of boards, constituting a second shield. Above this, leaving a two-inch air space, is placed a third insulating shield, the

top of which serves as a new floor for either the cooling-room or the room above, as the case may be.

Fig. 3433 represents the three interior shields of a triple insulation for wooden outer walls. The wall is first to be stripped of plaster and lath, and a foundation shield to be built upon the studding. This will give the three air spaces constituting the triple insulation.

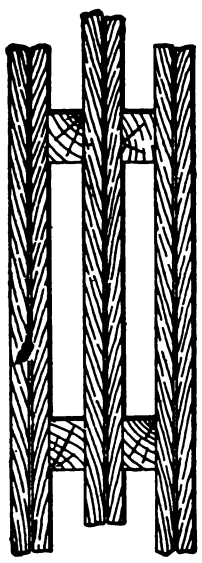

Fig. 3433.

In general terms, if the difference in temperature between the cooling-room and its surroundings, under ordinary conditions, is to be greater than 20°, triple insulation is to be employed. In case the difference is to be less than 20°, one shield may be omitted. A south outer wall naturally requires one more shield than a north outer wall if the location be in the north temperate zone. If in South America (the southern part) or Southern Africa, the reverse would be true. If a heater of some sort occupies a room adjacent to the room to be cooled, an additional shield should be built on that side.

In case a freezing-room (temperature from 5° to 10°) is required, it is economy to place it inside a cooling-room, in which case double insulation would be sufficient. Otherwise, quadruple insulation would be required, and in some cases still more thorough insulation.

It is obvious that the brine tanks of ice-making plants should be as carefully insulated as the cooling-rooms or other manufacturing operations, or the cold-storage rooms of mercantile operations.

LIQUID AIR.—This present year (1899) has provoked wide discussion of the probabilities of the use of liquid air as a means of mechanical refrigeration. Discussion, however, is as far as the matter has gone. Newspaper statements and announcements of inventions and plausible theories are all plentiful, and the ordinary reader may easily think that its actual use for commercial refrigeration is assured.

There is no question about the intense degree of cold exhibited by liquid air, nor about the amount of heat it is capable of extracting from its surroundings in the process of vaporizing, or changing from the liquid to the gaseous state; nor, if current news reports are to be believed, about the large sums of money launched into experimental machinery for utilizing liquid air for both refrigeration and production of power.

In the judgment of men who are engaged in the practical operation of turning raw material into dollars through the practical channels of practical business, there is still an emphatic doubt. They do not undertake to say that liquid air will not eventually be utilized for both purposes, but they believe that it is as yet in an experimental stage.

Cost of production has yet to be much reduced, or more advantageous methods of use to be discovered, before it can successfully compete with present methods for all ordinary operations in both refrigeration and application of power.

PROPERTIES OF AMMONIA.

PROFESSOR DE V. WOOD. *Extended by* G. DAVIDSON.

(EXTRACT—*by courtesy of the De La Vergne Co.*)

Temperature. (Degrees.)		Pressure. Pounds per Sq. Inch.		Heat of Vaporization. (Thermal Units.)	Cubic Feet, per Pound of:		Weight in Lbs., of One Cubic Foot of:	
Fahrenheit.	Absolute.	Absolute.	Gauge.		Vapor.	Liquid.	Vapor.	Liquid.
− 40	420.66	10.69	− 4.01	579.67	24.388	.02348	.0410	42.589
− 35	425.66	12.31	− 2.39	576.68	21.321	.02362	.0469	42.337
− 30	430.66	14.13	− 0.57	573.69	18.693	.02374	.0535	42.123
− 25	435.66	16.17	+ 1.47	570.68	16.446	.02389	.0608	41.858
− 20	440.66	18.45	+ 3.75	567.67	14.507	.02403	.0689	41.615
− 15	445.66	20.99	+ 6.29	564.64	12.834	.02417	.0779	41.374
− 10	450.66	23.80	+ 9.10	561.61	11.385	.02431	.0878	41.135
− 5	455.66	26.92	+ 12.22	558.56	10.125	.02445	.0988	40.900
0	460.66	30.37	+ 15.67	555.50	9.028	.02461	.1107	40.650
+ 5	465.66	34.16	+ 19.46	552.43	8.070	.02475	.1240	40.404
+ 10	470.66	38.34	+ 23.64	549.35	7.229	.02490	.1383	40.160
11	1	39.23	24.53	548.73	7.075	.02493	.1413	40.112
12	2	40.13	25.43	548.11	6.924	.02496	.1444	40.064
13	3	41.04	26.34	547.49	6.786	.02499	.1474	40.016
14	4	41.98	27.28	546.88	6.632	.02502	.1508	39.968
+ 15	475.66	42.94	+ 28.24	546.26	6.491	.02505	.1541	39.920
16	6	43.90	29.20	545.63	6.355	.02508	.1573	39.872
17	7	44.88	30.18	545.01	6.222	.02511	.1607	39.824
18	8	45.89	31.19	544.39	6.093	.02514	.1641	39.777
19	9	46.91	32.21	543.77	5.966	.02517	.1676	39.729
+ 20	480.66	47.95	+ 33.25	543.15	5.843	.02520	.1711	39.682
21	1	49.01	34.31	542.53	5.722	.02523	.1748	39.635
22	2	50.09	35.39	541.90	5.605	.02527	.1784	39.572
23	3	51.18	36.48	541.28	5.488	.02529	.1822	39.541
24	4	52.30	37.60	540.66	5.378	.02533	.1860	39.479
+ 25	485.66	53.43	+ 38.73	540.03	5.270	.02536	.1897	39.432
26	6	54.59	39.89	539.41	5.163	.02539	.1937	39.386
27	7	55.76	41.06	538.78	5.058	.02542	.1977	39.339
28	8	56.96	42.26	538.16	4.960	.02545	.2016	39.292
29	9	58.17	43.47	537.53	4.858	.02548	.2059	39.246
+ 30	490.66	59.42	+ 44.72	536.91	4.763	.02551	.2099	39.200
31	1	60.67	45.97	536.28	4.668	.02554	.2142	39.115
32	2	61.95	47.25	535.66	4.577	.02557	.2185	39.108
+ 33	493.66	63.25	+ 48.55	535.03	4.486	.02561	.2229	39.047
34	4	64.58	49.88	534.40	4.400	.02564	.2273	39.001
+ 35	495.66	65.92	+ 51.22	533.78	4.314	.02568	.2318	38.940
36	6	67.29	52.59	533.13	4.234	.02571	.2362	38.894
37	7	68.68	53.98	532.52	4.147	.02574	.2413	38.850
38	8	70.09	55.39	531.89	4.068	.02578	.2458	38.789
39	9	71.53	56.83	531.26	3.989	.02582	.2507	38.721
+ 40	500.66	72.99	+ 58.29	530.63	3.915	.02585	.2554	38.684
41	1	74.48	59.78	529.99	3.839	.02588	.2605	38.639
42	2	75.99	61.29	529.36	3.766	.02591	.2655	38.595
43	3	77.52	62.82	528.73	3.695	.02594	.2706	38.550
44	4	79.08	64.38	528.10	3.627	.02597	.2757	38.499
+ 45	505.66	80.66	+ 65.96	527.47	3.559	.02600	.2809	38.461
46	6	82.27	67.57	526.83	3.493	.02603	.2863	38.417
47	7	83.90	69.20	526.20	3.428	.02606	.2917	38.373
48	8	85.56	70.86	525.57	3.362	.02609	.2974	38.328
49	9	87.25	72.55	524.93	3.303	.02612	.3027	38.284
+ 50	510.66	88.96	+ 74.26	524.30	3.242	.02616	.3084	38.226
51	1	90.70	76.00	523.66	3.182	.02620	.3143	38.167
52	2	92.46	77.76	523.03	3.124	.02623	.3201	38.124
53	3	94.25	79.55	522.39	3.069	.02626	.3258	38.080
54	4	96.07	81.37	521.76	3.012	.02629	.3320	38.037
+ 55	515.66	97.92	+ 83.22	521.12	2.958	.02632	.3380	37.993
+ 60	520.66	107.59	+ 92.89	517.93	2.705	.02651	.3697	37.736
+ 65	525.66	118.03	+ 103.33	514.73	2.476	.02668	.4039	37.481
+ 70	530.66	129.19	+ 114.49	511.52	2.272	.02686	.4401	37.230
+ 75	535.66	141.22	+ 126.52	508.29	2.087	.02703	.4791	36.995
+ 80	540.66	154.10	+ 139.40	505.05	1.921	.02721	.5205	36.751
+ 85	545.66	167.88	+ 153.18	501.81	1.770	.02739	.5649	36.509
+ 90	550.66	182.62	+ 167.92	498.55	1.634	.02758	.6120	36.258
+ 95	555.66	198.35	+ 183.65	495.29	1.510	.02776	.6622	36.023
+ 100	560.66	215.12	+ 200.42	492.01	1.398	.02795	.7153	35.778

CHAPTER XLIV.—ELECTRICAL MACHINES AND MOTORS.

THE name "electric generator" is applied to any machine which is so constructed that it will develop electric currents by electro-magnetic action. When the modern development of the electrical industry first began, the name "dynamo" was used to designate these machines, but at the present day this term is applied only to machines made for the purpose of operating "arc lights."

An electric generator, in order that it may be able to generate a current, must be driven by a steam engine, or some other source of power; that is, it is not a true generator, but simply a transformer of one form of energy into another. A true generator is an impossibility, since we cannot create power. The amount of electrical energy obtainable from a given generator will depend upon the amount of power applied to it, and also upon the efficiency of its operation; but under no conditions can it be equal to the power of the prime mover by which it is driven. If the efficiency is, say, 90 per cent., the energy of the current developed will be 90 per cent. of the applied power; if the efficiency is 80 per cent., the current will also be 80 per cent., and so on for any percentage of efficiency. The difference between the power applied and that appearing in the electric circuit is lost in the machine; part being consumed by the mechanical friction, and part by forcing the current through the wires, and thus developing heat therein.

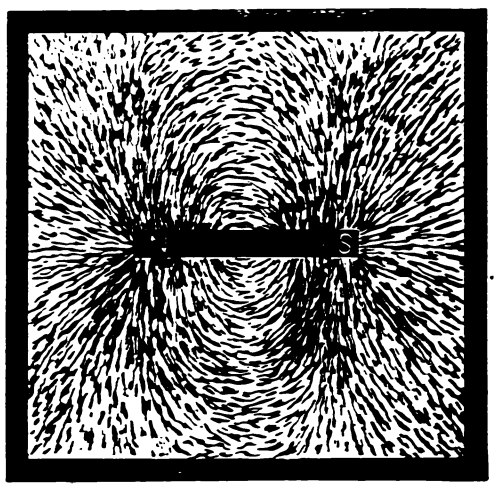

Fig. 3434.

Electric generators are divided into two classes: those designed to develop continuous currents, and which are called generators; and those intended for the generation of alternating currents, and which are called alternators. Each class is again subdivided into constant current and constant potential machines; the first being so constructed that they develop a current of constant strength, and the second being constructed to develop currents of variable strength but constant electromotive force or electrical pressure. Continuous current machines—that is, generators—are used for lighting purposes, for the operation of motors, both stationary and of the railway type; for electro-plating, and for the various electrical processes employed in the arts. Alternators are used for lighting and for power, but are not suitable for electro-plating and similar purposes. Every alternator, or generator, must consist of two principal parts: the field, or that portion of the machine in which the magnetism is developed; and the armature, or that portion in which the electric current is induced. In generators there must also be a device known as a commutator, this being necessary owing to the fact that the only kind of current that it is possible to induce is the alternating, and to obtain from this a continuous current a rectifying apparatus must be employed. From this it will be seen that a commutator is simply a current rectifier.

Since every form of machine develops primarily an alternating current, it will be inferred that the principles of operation are the same in all, and this is strictly correct. The difference between alternators and generators consists wholly in the details of construction, and in the manner in which the wire is wound upon them. A brief explanation of the principles upon which electric generators act will enable us to fully appreciate the difference between the various types of alternators as well as simple generators, and this explanation will be given in the following:

Nearly one hundred years ago, it was found by experiment that

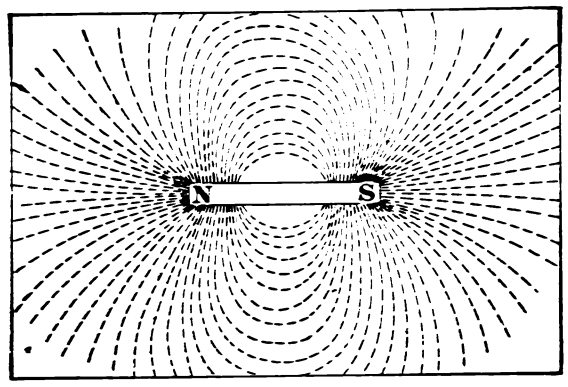

Fig. 3435.

if a wire is moved in the vicinity of a magnet, an electric current will be developed in it. It was not, however, until Faraday took the subject up in 1831 and investigated it thoroughly, that the real nature of the action became fully understood. If we take a permanent magnet, which is simply a bar of hardened steel that is magnetized, and place it under a paper upon which iron filings are spread in a thin layer, and then shake the paper gently for several minutes, we will find that gradually the filings will arrange themselves in lines running from one end of the space, directly

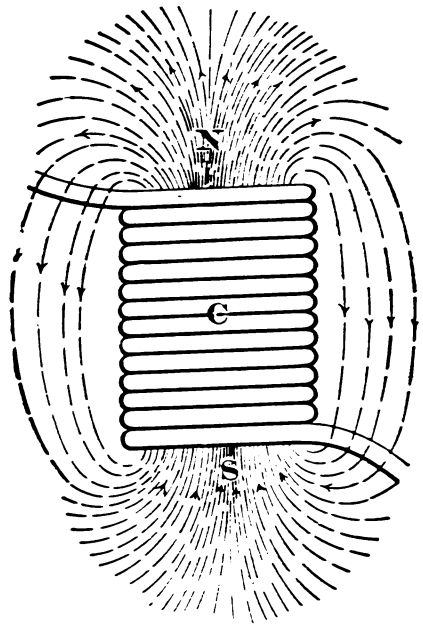

Fig. 3436.

over the magnet, to the other. After a while the filings will present the appearance shown in Fig. 3434, in which the black bar in the centre indicates the position of the magnet under the paper, and the shaded portion, the location of the ridges of iron filings. Faraday, after long experiment, came to the conclusion that the position assumed by the filings must be such as to run from one end to the other of the bar; for, as is well known, both ends, or poles, of a magnet attract iron; hence, no matter where the filings may be, they are drawn toward both ends of the magnet, but not

with the same force. These lines, along which the filings will arrange themselves, are called lines of magnetic force, or simply lines of force, and they indicate the direction in which the force acts at the points where they are located in the space surrounding the magnet. Every line of force passes out of one end of the magnet and enters the other, thus forming, with the body of the magnet, a closed loop. In Fig. 3435 the lines of force are shown more clearly than in the first figure, and here it will be seen that

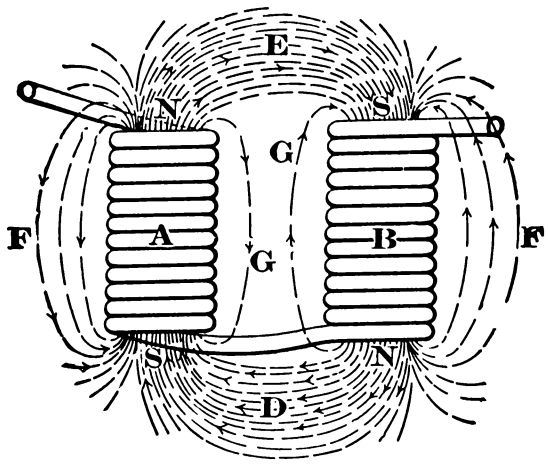

Fig. 3437.

those that do not pass beyond the boundaries of the diagram are closed curves; the others would also be such if the drawing were large enough.

The experiments of Faraday fully demonstrated that if a wire is moved in the vicinity of a magnet in such a direction as to cut across the path of the lines of force, a current will be induced in it, but that if it is moved in such a direction that the lines of force are not cut, then no current will be developed. This fact has been fully demonstrated by all the years of experience with electrical machinery of every type, and it is true no matter what kind of magnet is used; that is, no matter how the magnetic lines of force are developed, whether by a permanent magnet, an electro-magnet, or a simple solenoid.

It is generally supposed by those not versed in electrical matters that magnetism is a property peculiar to iron and steel; but such is not the case. Magnetism can be developed by the action

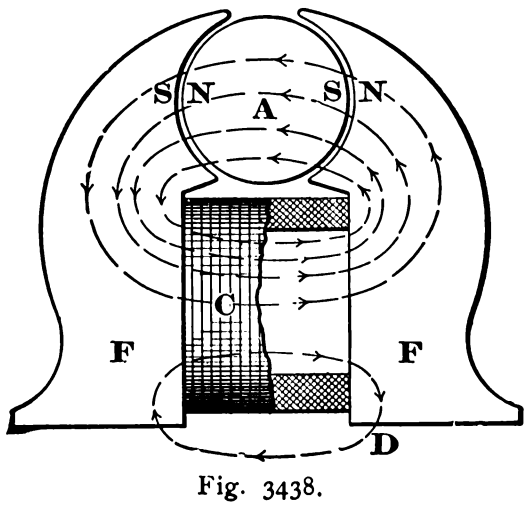

Fig. 3438.

of electric currents; or, to speak more correctly, magnetism is an accompaniment of electric currents. If a wire covered with cotton, commonly called magnet wire, is wound in the form of a coil, as shown in Fig. 3436, and a current of electricity passed through it, the coil will show magnetic properties, the same as a permanent magnet, and the space surrounding it will be filled with magnetism, as is indicated in the figure by the lines of force. If the coil is made longer, and is bent in the middle so as to bring the two halves side by side, as is shown in Fig. 3437, then the lines of force from one part of the coil will pass through the other part. The coil in Fig. 3436 is a single solenoid and that in Fig. 3437 is a double solenoid. If in either of these we insert a bar of iron, the magnetic force will be increased; but this is not due to any magnetic properties of the iron, but simply to the fact that iron and steel resist the development of magnetic force less than the air.

If the simple solenoid of Fig. 3436 is placed around a piece of iron of the shape shown in Fig. 3438, we will have what is called an electro-magnet of the horseshoe type. In this case the lines of force will not be evenly distributed all around the magnet, as they would be in Fig. 3435, but the greater portion would pass by the way of the horns of the casting; that is, along the path marked A. The number of lines passing by the path D would be very much smaller, the reason for the difference being that the resistance to the magnetic force by the latter path would be very much greater than by the former. If the solenoid of Fig. 3436 is placed upon a casting of the form shown in Fig. 3439, then the lines of force passing around both sides will be the same, because on both sides there is an iron path. If the double solenoid of Fig. 3437 is placed around a casting of the form shown in Fig. 3440, nearly all the lines of force will pass along the path marked A and very few by

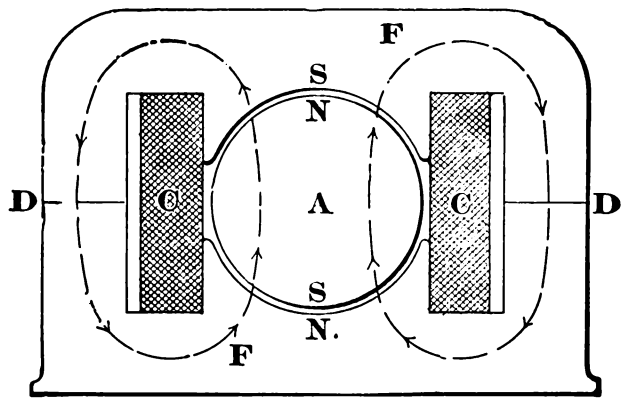

Fig. 3439.

way of D D. This again is due to the fact that the resistance of the A path is the lowest.

In electric machines, the field magnets are constructed upon the general design shown in Figs. 3438 and 3440, so as to concentrate the lines of force at a given point. It is necessary to do this because the current developed by the cutting of wires across the lines of force is proportional to the number of lines cut in a given time, and, therefore, if we desire to obtain a large amount of current we must so arrange the machine that a large number of lines may be cut. In addition to this, if we did not make an effort to concentrate the lines of force at one point, the generator would be far from efficient, for only a small portion of the magnetism would be utilized.

If in the space A of Figs. 3438 or 3440, we place a shaft upon which wire loops are mounted, as is shown in Fig. 3441, we can induce, in these wires, currents of electricity by revolving the shaft.

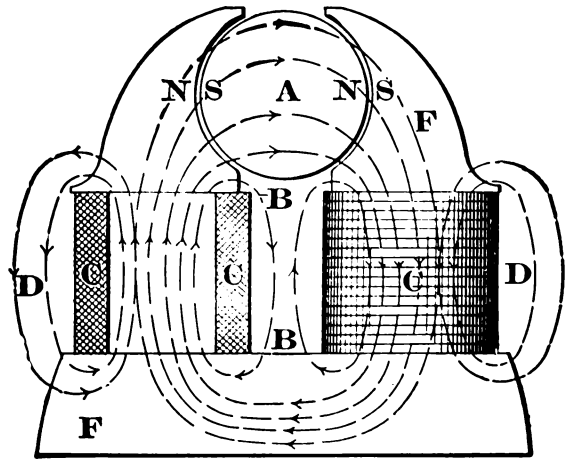

Fig. 3440.

If the direction of rotation is as indicated by the arrow, the direction of the current induced in the wire will be as indicated by the arrows drawn at their sides. From the direction of these arrows it will be seen that when a wire is moving in front of the N pole the current will be in one direction, and when it is moving in front of the S pole it will be in the opposite direction; hence, in each wire the direction of the current will change twice in each revolution.

With a machine constructed as shown in Fig. 3441, no current could be conveyed to the circuit outside of the revolving part,

because the wires are closed upon themselves, and, consequently, the currents would circulate in local circuits. If, however, the wires are separated from the shaft at the crank end, and their ends are attached to rings that are not in metallic connection with each other or with the shaft, then, by means of springs arranged to press upon these rings, the current can be conveyed to the external circuit, but it will be an alternating current. If we desire a continuous current we must make use of a commutator, the principle of action of which is illustrated in Figs. 3442 and 3443, the first representing the connections with a drum armature, and the second

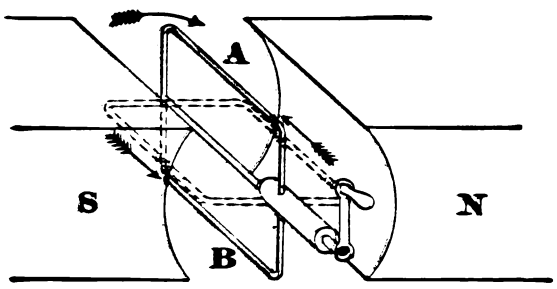

Fig. 3441.

the connections with a ring armature. The armature of an electric machine is the part that revolves, as shown in Fig. 3441; but the construction of this figure would not be suitable for practical purposes, owing to the fact that there are only four wires, while it is necessary to have many hundred to be able to obtain the strength of current required commercially. In theory there is no difference between the armature of Fig. 3441 and the drum armature shown in Fig. 3445, but in practice there is a great difference; but this difference is really only in the amount of current obtainable from both. Fig. 3444 shows a ring armature, and the wire

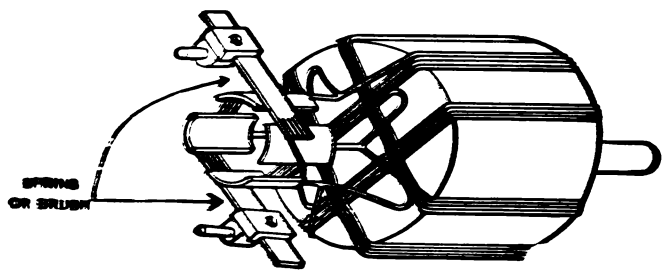

Fig. 3442.

is wound in a manner similar to that shown in Fig. 3450, while the drum armature, Fig. 3445, is wound as indicated in Fig. 3442. Imagine Fig. 3443 placed in the space between the poles of 3441, and that two metallic springs are arranged (as in 3442) so that they will press upon opposite sections of the small drum shown in the front of diagram, which is divided into four parts. Now, if these springs are stationary, it is evident that as fast as the armature revolves, they will pass from segment to segment; that is, the segments will slide past the springs as the armature turns around.

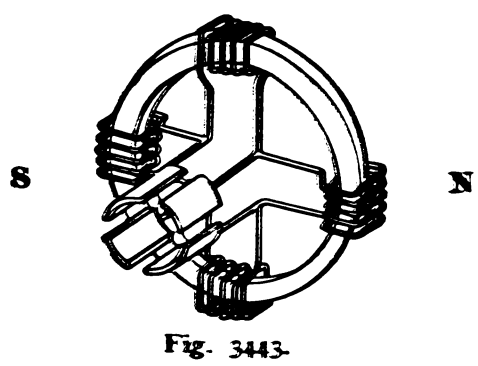

Fig. 3443.

This being the case, we can see that the two coils facing the N pole will connect with the two segments upon which the brushes or springs rest, and this will also be true of the two coils opposite the S pole. That this will be the case no matter what the position of the armature may be can be realized when we consider that the opposite segments are connected with opposite sides of the armature coils. Take any one coil, and it will be seen that one of its ends connects with one segment and the other end with a segment adjoining; that is, if the springs rested upon adjoining segments, a current passed through them would pass through just one coil on one side and three coils on the other. Now, as the brushes are set to press on opposite segments, the current, entering through one, must pass through two coils whichever route it takes, before it reaches the other brush. If the armature revolves in the direction indicated by the arrow in Fig. 3441, the current will flow away from the crank end in all the wires opposite the N pole and toward the crank end in the wires opposite the S pole, and if the manner

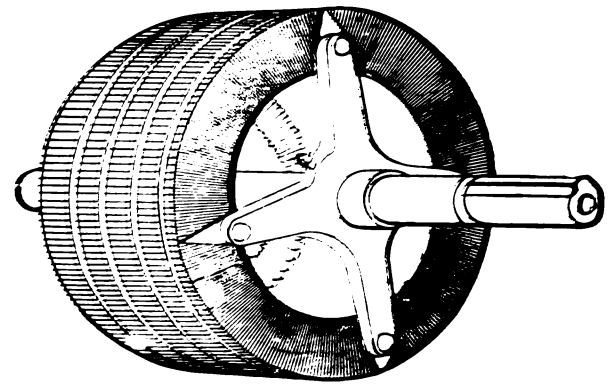

Fig. 3444.

in which the wire is wound in Fig. 3443 is noted it will be seen that the current, entering through a segment on top of the shaft, will divide and flow through the coils on each half of the armature in the direction indicated by the arrows, and that these two currents will come together at the lower brush. Since the current in the coils opposite the poles does not change its direction, it follows that the current taken off by the brushes will be always in

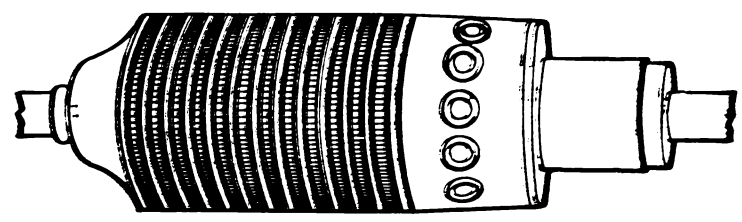

Fig. 3445.

the same direction, although, in the coils themselves, it will reverse twice in each revolution.

The drum, that is divided into four segments and through which the current is conveyed outside of the armature, is what is known as the commutator, but the actual construction used in practice is considerably different from that shown in the simple diagram, as can be seen from Figs. 3446 and 3447, which are two views of a commutator such as is used in small machines. Fig. 3446 is a

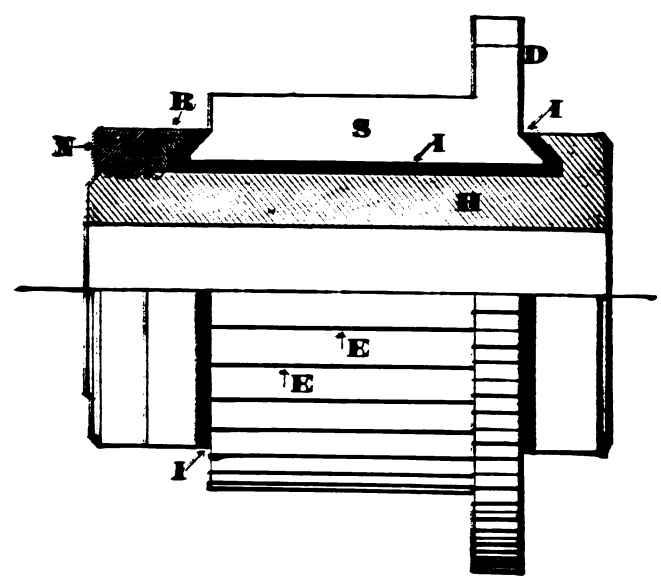

Fig. 3446.

side view with the upper half in section, and Fig. 3447 is an end view. The body, or hub, of the commutator is shown at H, and is made generally of cast iron, and is so formed as to be able to securely clamp the segments S, these taking the part of the four segments of Fig. 3443. The segments are insulated from each other and from the hub by means of some material that is not a conductor of electricity. This insulation is shown at I in Fig. 3446

and at E in Figs. 3446 and 3447. That at I separates the segments from the hub and that at E separates them from each other. The segments are held in place by means of the ring R, which is forced up by the nut N. The grooves *g* in the ends of the segments are for the purpose of fastening the ends of the wire coils wound upon the armature.

The diagram representing a commutator shown in Fig. 3443

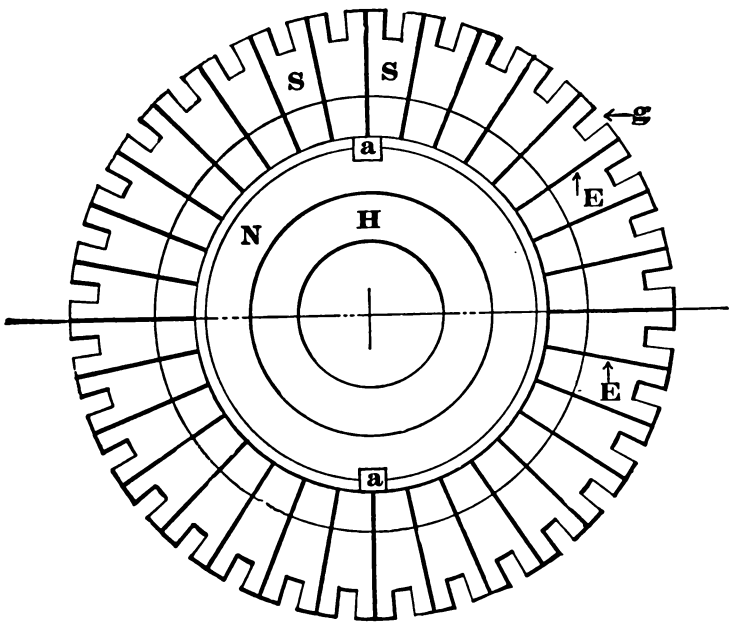

Fig. 3447.

consists of only four segments, while the actual commutator shown in Figs. 3446 and 3447 has thirty-two segments. Some commutators have several hundred segments. The object of increasing the number of segments is to render the current more uniform and also to reduce the size of the sparks that are produced when the brushes pass from one segment to another. The principle upon which the commutator acts, however, is the same whatever the number of segments may be.

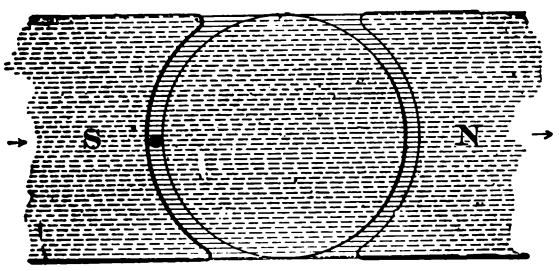

Fig. 3448.

As already stated, Fig. 3444 is a ring armature and Fig. 3445 a drum armature, these names being given to them on account of their form. Fig. 3444 shows the back end of the armature, and on this account the commutator cannot be seen; but through the interior of the ring the wires leading to the commutator are plainly visible. A drum armature will operate even if the core upon which the wire is wound is made of wood, but a ring armature

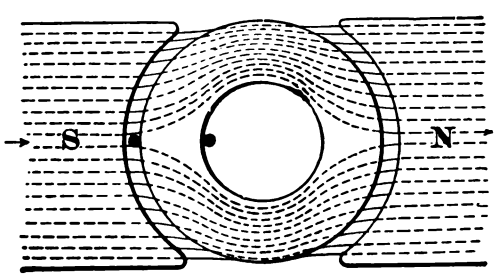

Fig. 3449.

will not generate a current, except a very weak one, unless the core is made of iron. Why this is so can be explained in connection with Figs. 3448 and 3449; the first representing a drum and the second a ring armature. In Fig. 3448 the black speck at the left-hand side of the armature core represents a wire, and, as we can plainly see, if it revolves a current will be induced in it. In Fig. 3449 the two specks at the left side of the ring core represent the two sides of a turn of wire around the ring. If the ring is made of iron, the lines of force passing from one pole to the other will not penetrate to the interior space, owing to the fact that the iron is a far better conductor of magnetism than the air. On this account the side of the wire loop within the ring is not acted upon by the lines of force. The current is induced wholly by the cutting of the outside wires through the magnetic field, as the space in which the armature revolves is called. The lines of force are drawn in this figure so as to show that the iron ring prevents them from passing into the interior space, the ring thus acting as

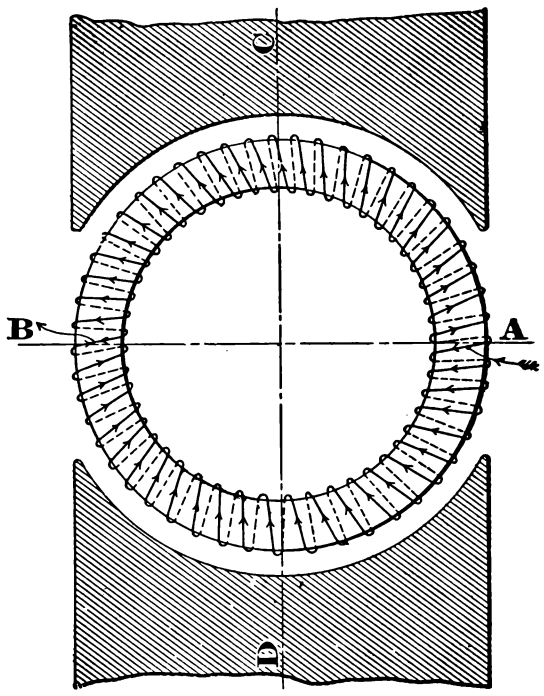

Fig. 3450.

a shield for the inner side of the coil. If the ring were made of wood, the lines of force would pass from one side to the other in straight lines, as is shown in Fig. 3448, and thus cut both sides of the coil. As in this case the current developed would be in the same direction in both sides of the coil—that is, in the same direction in space—the two inductions would counteract each other, for they would be in opposite directions in the wire itself. If this explanation is not sufficiently clear, all that it is necessary to consider is that if the current runs toward the *front* on the part of the coil that is on the *outside* of the ring, it will run toward the

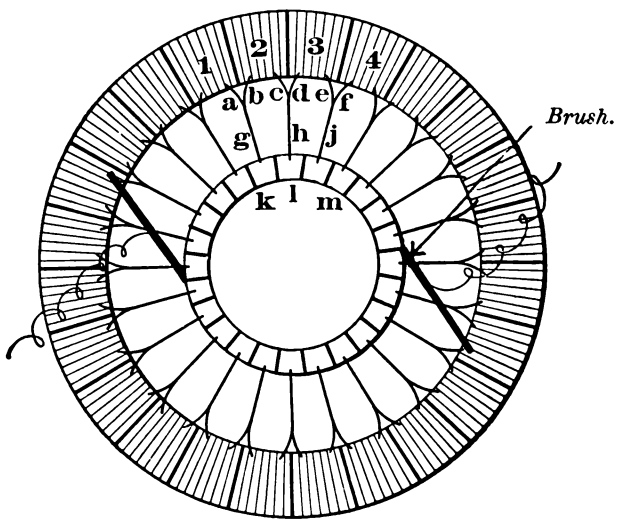

Fig. 3451.

back in the part that is *within* the ring; but if currents were induced in both sides they would both run either to the front or to the back; hence, would buck against each other at the end of the loop.

The diagrams, Figs. 3442 and 3443, only show four-part commutators and a corresponding number of armature coils; therefore, they do not serve to illustrate very well the manner in which the current is rectified when there are many coils upon the armature and many segments in the commutator. By the aid of Figs. 3450 and 3451 this action can be made quite clear.

Fig. 3450 represents, diagrammatically, a ring armature located

in a magnetic field, the poles being marked C and D. Suppose this ring is revolving in the direction of the hands of a clock; then it is evident from what has been said in connection with Figs. 3442 and 3443 that in all the wires above the line A B the current will flow in one direction, and in all the wires below line A B it will flow in the opposite direction. If we had springs resting upon the wire coils at both sides upon the line A B a current would flow into the armature through one spring and come out through the other, and as there is a continuous circuit from one side to the other through the wire on the two halves of the ring—that is, through that on the upper half, and through that on the lower half—the current would flow through both channels. When the armature advances the width of one turn of the wire, the turn next to the side A will pass below the line A B and the turn next to the line on the B side will pass above; hence, in these two turns, the direction of the current will have to reverse, for it must be in the same direction as that in all the other wires on that side of

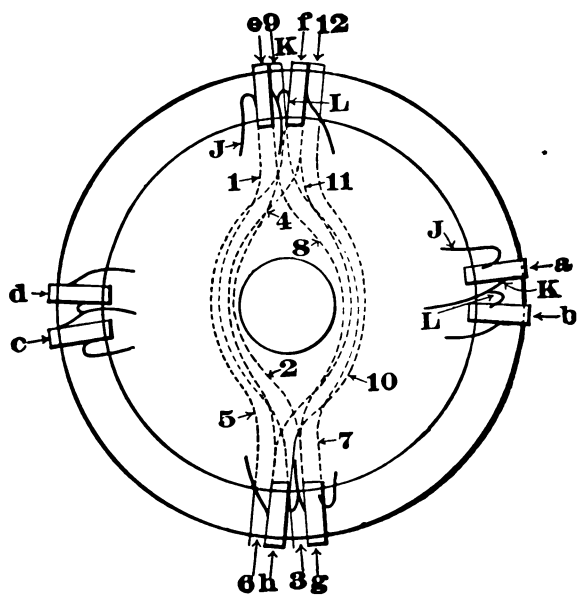

Fig. 3452.

the diameter A B. If, however, the springs that rest upon the wire are stationary, the points of contact will slip back one turn as the armature advances, and, as a consequence, the direction of the current in all the wires between the points where the springs press will still be the same. If this action is considered carefully it will be seen that the direction of the current in the armature wires reverses turn by turn, as they pass the line A B, and that at the same time the points from which the current for the external circuit are drawn are advanced in the same order; hence, the current in the armature wires will alternate as they revolve, but that in the circuit outside of the armature will be continuous.

As in practice it is necessary to use a large number of wires upon the armature, it is not customary to have the brushes press directly upon them, but instead to rest upon the device called a commutator, and to this the armature coil ends are attached, in the manner shown in Fig. 3451. Generally, the number of turns of wire is much greater than the number of commutator segments, and in such cases the wire is wound in coils, the ends of these being connected with the commutator segments as shown in Fig. 3451. Suppose there are six hundred turns of wire upon the armature, and that the commutator has only sixty segments; then the armature coils will each one have ten turns; thus in the figure the coils marked 1 2 3 4, etc., would have ten turns if the commutator had sixty segments and the armature a total of six hundred turns. Wire *g*, which connects with segment *k*, would connect with the end of coil 1 through wire *a* and with the beginning of coil 2 through wire *b*. In the same way wire *h* would connect with segment *l* and also with the end of coil 2 and the beginning of coil 3. With this arrangement of the connections between the armature and the commutator, it can be easily seen that a current entering through the brush located at the right-hand side would pass around through the wire on the upper as well as the lower half of the armature, and come out at the brush on the left-hand side. If these two brushes are connected, through the external circuit, a current will flow, but if not, there will be no current, for electricity cannot flow except in a continuous circuit.

The winding of a ring armature is very simple and easily understood, for, as can be seen at once, the several commutator segments can be considered as simply enlargements of certain of the armature coil turns. The drum winding, however, is not so easily understood; but it is, in principle, the same as the ring, the modifications made being such as are necessary on account of the fact that there is no open space within the armature through which the coils may wind. The difference between the two types of winding can be understood from Figs. 3452 and 3453. In Fig. 3452 the coils shown at the sides are connected with each other in the manner proper with a ring winding, and the coils at the top and bottom are extended by means of dotted lines, so as to show the modifications required to obtain a drum winding. As in the drum there is no open centre, the part of the coil that in the ring would occupy a place within the core, must be carried to the opposite side; thus, as coil *e* cannot have one side within the ring, it must be extended so as to occupy a position on the other side of the shaft, as shown by the dotted lines *l*, which lead to the space marked 3 between coils *g* and *h*. In the same way coil *f* must be carried over to the position marked 6 next to coil *h*. Coils *h* and *g* must also be carried over to the upper side of the core, and will there occupy the spaces 12 and 9, respectively. The ends of the coils will be connected with each other in the same manner as in the ring winding, as is clearly shown in the figure, the connections of the coils shown at the sides, and which are true ring coils, being the same as those of the coils at the top. A close inspection of the diagram will show that the ends of the wire come only from the alternate coils, this being the case as the spaces between these are filled by the part of the coil that in the ring winding

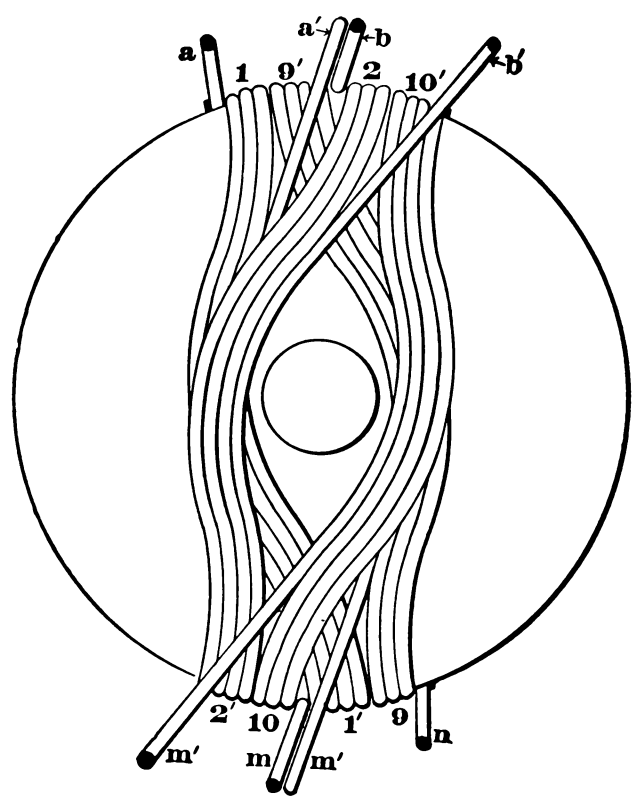

Fig. 3453.

passes along the inner side of the core, and which might be called the return side of the coil. From Fig. 3453 the manner of winding can be more readily understood, now that the manner in which we pass from the ring to the drum winding is ascertained. In this figure it will be seen that the end of coil 1, which is marked *a'*, connects at the top of the figure with the beginning of coil 2, which is marked *b*, and that the end of coil 2 (*b'*) connects with coil 3 (not shown), but which, if shown, would be next to the coil marked 10'. Thus it will be noticed that the connecting wires skip, apparently, one coil each time; but in reality they do not, for what they skip is the return side of coils whose ends are on the opposite side of the diameter.

In the foregoing, currents have been spoken of as being generated in the armature coils as these cut through the lines of force of the magnetic field while the armature revolves. This style of expres-

sion, although commonly used, is not strictly correct, for the cutting of the wires through the lines of force results in developing an electromotive force. Now electromotive force is the force that causes an electric current to flow providing there is a closed circuit in which it can flow. As electromotive force causes a current to flow, it might be advanced that to say that the cutting of the lines of force by the armature develops not a current but an electromotive force is splitting hairs, for the final result is to cause a current to flow. This conclusion, however, is not correct, for the reason that the current, or strength of the current, does not depend upon the electromotive force alone, but also upon the resistance that opposed the flow of current through the circuit, and this resistance may be large or small, so that the amount of current that a given electromotive force will develop in a circuit is not fixed, but may vary enormously, depending upon the magnitude of the resistance encountered. Electromotive force is measured in units called volts; the strength of the current is measured in units called amperes; and the resistance set up by the wire, or any other path in which the current flows, is measured in units called ohms. The relation between these units—the volt, the ampere, and the ohm—is such that an electromotive force of one volt will force a current of one ampere through a circuit having a resistance of one ohm. If the resistance of the circuit is reduced to one-half of an ohm, the current will be two amperes with the same voltage. If the resistance is reduced to the one-thousandth part of an ohm, the current will be increased to one thousand amperes. Thus it will be seen that the electromotive force developed by the armature only plays one part in the determination of the strength of the current that is to flow in the circuit, and that the other part is played by the resistance of the circuit.

From the relations between electromotive force, resistance, and current strength, explained in the foregoing, it can be seen that if the armature develops a constant voltage, the strength of the current will change with the resistance of the circuit. On the other hand, if we desire that the current strength remain constant, no matter how much the voltage may vary, it becomes necessary to so construct the machine that the armature will develop an electromotive force that will increase or decrease as the resistance in the external circuit increases or decreases. A generator that will develop a uniform voltage under all conditions of circuit resistance, is called a constant potential generator, and if its construction is such that the current will remain constant in strength while the circuit resistance varies, it is called a constant current generator. To obtain a machine of the first class the winding of the field coils must be different from that used for the second. The several types of field winding can be explained in connection with Figs. 3454, 3455, and 3456; the first being what is called a series winding, the second a shunt winding, and the third a compound winding.

In the series winding the brush, B′, below the commutator C, is connected with one end of the field magnetizing coils; therefore, all the current generated by the armature passes through the field magnetizing coils and goes out to the external circuit, as is indicated by the line N and the arrow above it. After passing through all the devices in the external circuit the current returns to wire P, and thence to the armature through the brush on the upper side. This type of winding will not of itself give a constant current with changes in the resistance of the external circuit, for if the resistance were reduced the inevitable result would be that the current would increase. In order that the machine may be able to maintain a constant strength of current with variations in the external resistance, it is necessary to devise means whereby the strength of the field magnets may be changed without changing the strength of the current, or else to so arrange the armature wires that more or less of the turns may be rendered ineffective. Both methods are used, and it is difficult to say which is the best. With the arrangement in which the field magnetism is varied, the result is accomplished by increasing or decreasing the number of turns of wire in the magnetizing coils through which the current flows. The strength of an electromagnet is increased by increasing the strength of current circulating around the magnetizing coils. Now this current is measured, not by the strength of the current actually flowing in the wire, but by this strength multiplied by the number of times it passes around the circle; that is, by the number of turns of wire in the coil, and the product it expresses as so many ampere turns. If the current strength in the wire remains constant, as it must in a constant current generator, the ampere turns can be increased or decreased by increasing or decreasing the number of turns of wire, and this is the method adopted for regulating such machines by varying the strength of the field. In such cases the field coils are so wound that the wire E, Fig. 3454, can be made to connect either the extreme ends of the two coils or any other points, so as to cut out of service as much of both coils as may be necessary to maintain constant the current strength.

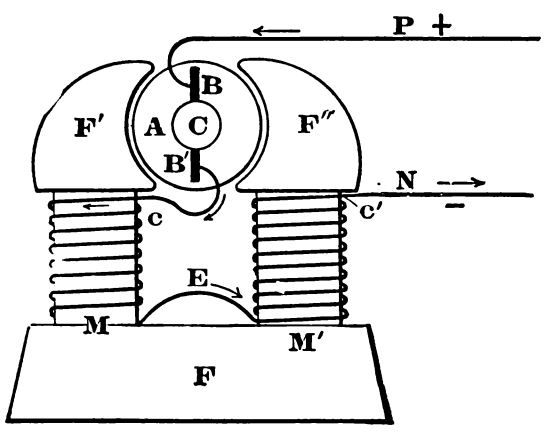

Fig. 3454.

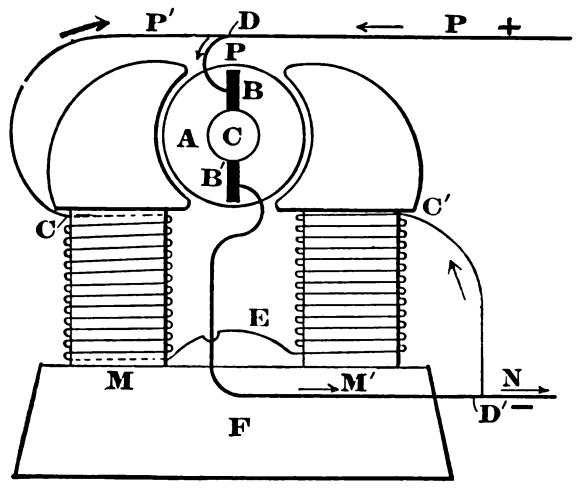

Fig. 3455.

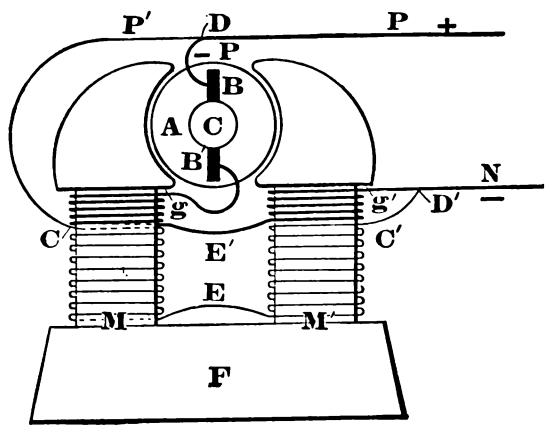

Fig. 3456.

When the regulation is effected by varying the number of active wires upon the armature, the arrangement employed is generally some modification of one and the same method, and this consists in changing the position of the brushes upon the commutator so that they do not rest at the points where the direction of the current in the armature coils is reversed, but either ahead or behind it. As can be seen at once, the effect of this change in the position of the brushes is that in a portion of the wires the electromotive force developed is in the wrong direction, and this acts as a back pressure against the voltage developed in the other part. If there were as many wires in which the electromotive force is in one direction as those in which it flows in the other direction, then the two actions would just balance each other, and there would be no current. From this it can be seen that by rotating the commutator brushes the voltage developed by the armature can be changed from zero all the way up to the maximum capacity of the machine.

In a shunt wound generator, the current developed in the armature does not all pass through the field coils; on the contrary, only a small portion thereof takes that path. In Fig. 3455 it will be seen that the current, after reaching the point D′ in wire M′, divides, part going by way of wire N to the external circuit, and part by way of C′ to the field magnetizing coils. After passing through these coils it joins the main line at D and returns to the armature. Now as the resistance of the field coils remains unchanged, the current flowing through them will be the same, in strength, so

long as the voltage developed by the armature is the same, and as this will not change, the result is that the machine becomes self-regulating for constant voltage.

When it is desired that the current be transmitted to a distance of several hundred feet, and that the voltage remain constant at the point of delivery, it is necessary that the electromotive force developed by the armature increase slightly as the current

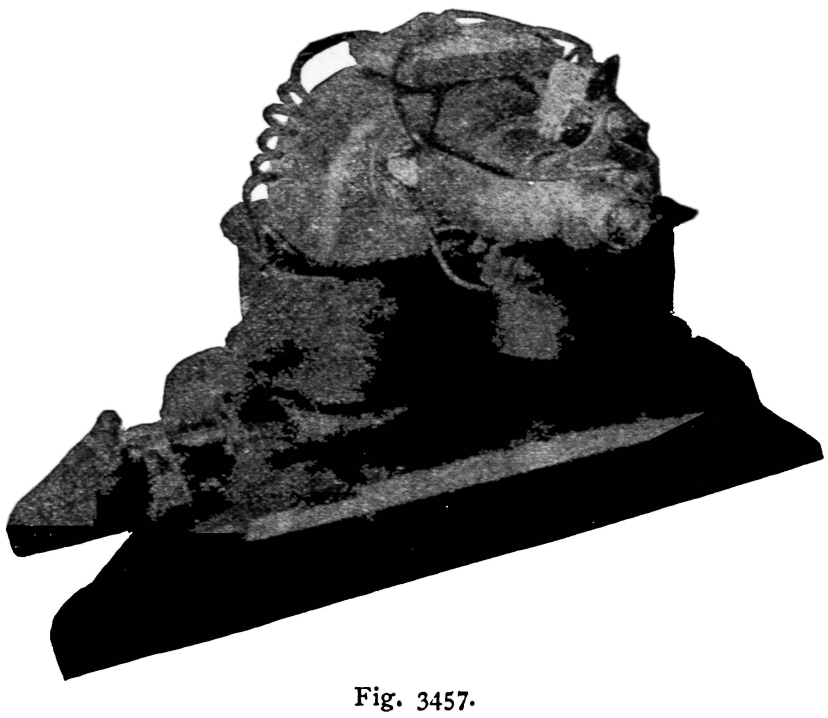

Fig. 3457.

strength increases. Why this is the case can be understood when we consider that the current forced through a conductor is proportional to the resistance and the voltage. Now suppose we have a current of one hundred amperes, and that we transmit it over a line several hundred feet long whose resistance is one hundreth of an ohm ; then it is evident that the voltage required to force the current through will be one volt. If the total voltage at the generator is one hundred, then there will be a loss of one per cent. in transmitting it over the line. This is what is called the line drop. If the current is increased to five hundred amperes, it will require five times the number of volts to force it through the line wires ; that is, five volts, and the line drop, in this case, will be five per cent. From this we see that with one hundred amperes the voltage at the receiving end will be ninety-nine volts, but with five hundred amperes it will only be ninety-five volts. If, however, the generator is so arranged that when the current becomes five hundred amperes, the voltage will be increased to one hundred and four ; then, the electromotive force at the end of the line will still be ninety-nine volts. If a generator is compound wound it will accomplish this result, as will be understood from the following explanation :

In Fig. 3456 it will be noticed that the current from the lower brush passes first through coils *g g'* wound upon the field, and then divides at D', part passing to the field shunt coils, just as in Fig. 3455, and the balance going to the external circuit. This current,

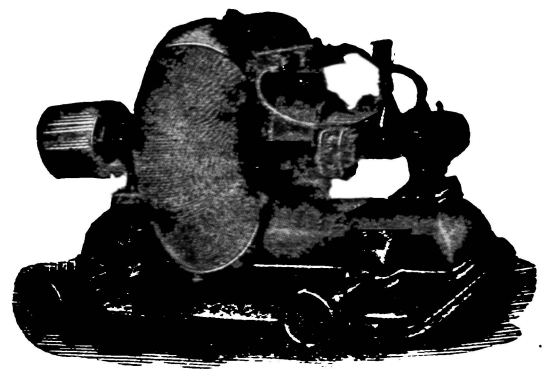

Fig. 3459.

returning through wire P, goes to the armature through the upper brush as before described. This type of winding is called compound because it is a combination of the shunt and the series windings. The shunt coils alone will, as has been shown, keep the voltage constant at the armature terminals, or nearly so. Now the series coils will magnetize the field directly in proportion to the strength of the current flowing through them ; that is, if the machine is developing a small current the effect of these coils will be small, but if the current is strong the effect will be in proportion. Inasmuch as the voltage has to increase as the current increases, it follows that the action of these series coils is just what is required to make the machine automatic in its action ; and to compensate for any reduction in voltage due to line drop, all that is necessary is to properly proportion the number of turns in the series coils.

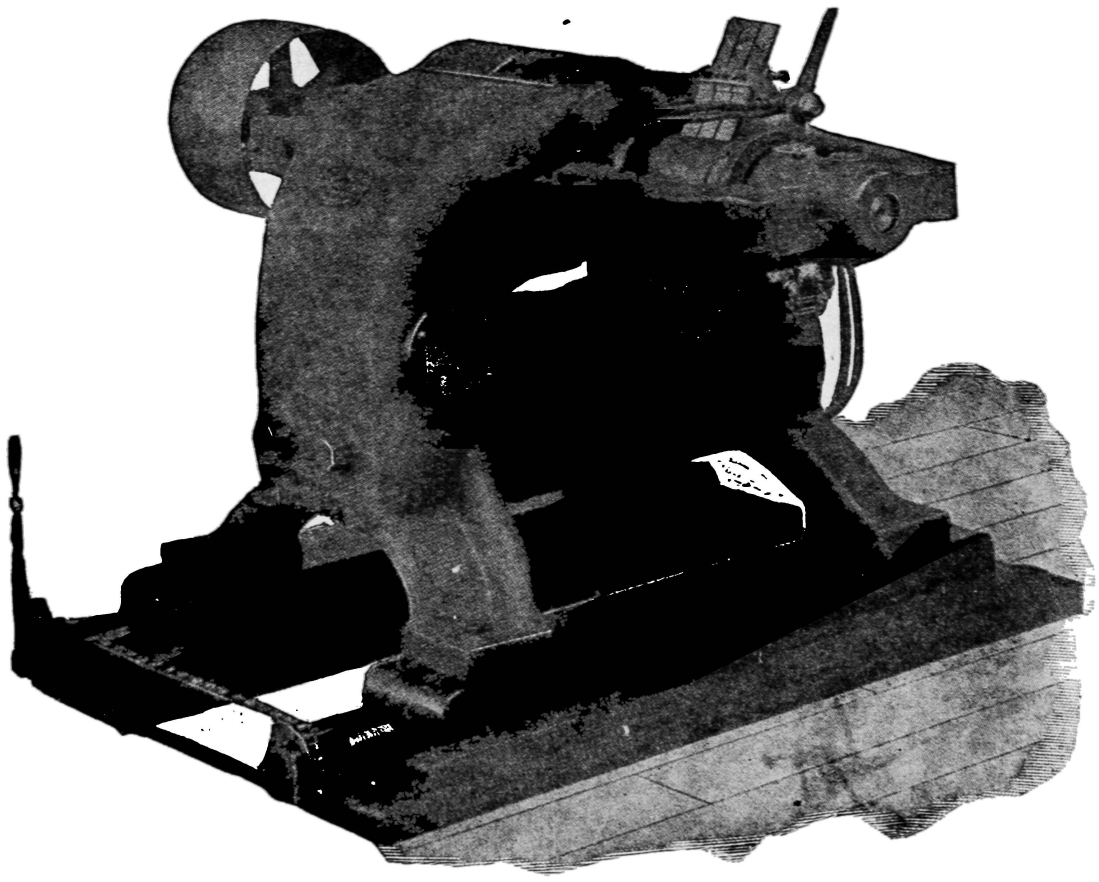

Fig. 3458.

Constant potential generators can be made so as to deliver a constant voltage either at the terminals of the machine or at the end of a distribution line by simply winding the field coils in shunt or compound. A generator, to regulate automatically for a constant current delivery, must be provided with some kind of

mechanism that will either change the connections in the field coils or shift the commutator brushes. The constant potential machines are therefore the most simple. They are the kind used for operating incandescent lamps, stationary and railway motors, and, in fact, for every service except "arc lighting." For the latter purpose the more complicated constant current machines are required.

The types of generators we have so far shown and discussed are of the two-pole variety and are called bipolar. In the early days of the electric lighting industry they were used exclusively, but at the present time they are only made in small sizes, up to about fifty or seventy-five horse-power. The number of designs of bipolar machines that have been placed upon the market within the last twenty years is very great, but they all operate upon the same principle, and, except in a very slight degree, the shape has no effect whatever upon the efficiency of the machine, this depending almost wholly upon the proper proportioning of the various parts. Of all the various designs that have been evolved, about the only ones that survive are those built in the forms illustrated diagrammatically in Figs. 3454 to 3456 and also in Fig. 3438. Fig. 3457 shows one of the numerous designs corresponding to Fig. 3454, and the similarity between Figs. 3458 and 3438 will be noticed at once. Fig. 3459 is a design that has gained considerable popularity as a motor. Fig. 3460, as will be seen, is simply the general form of Fig. 3454 turned upside down.

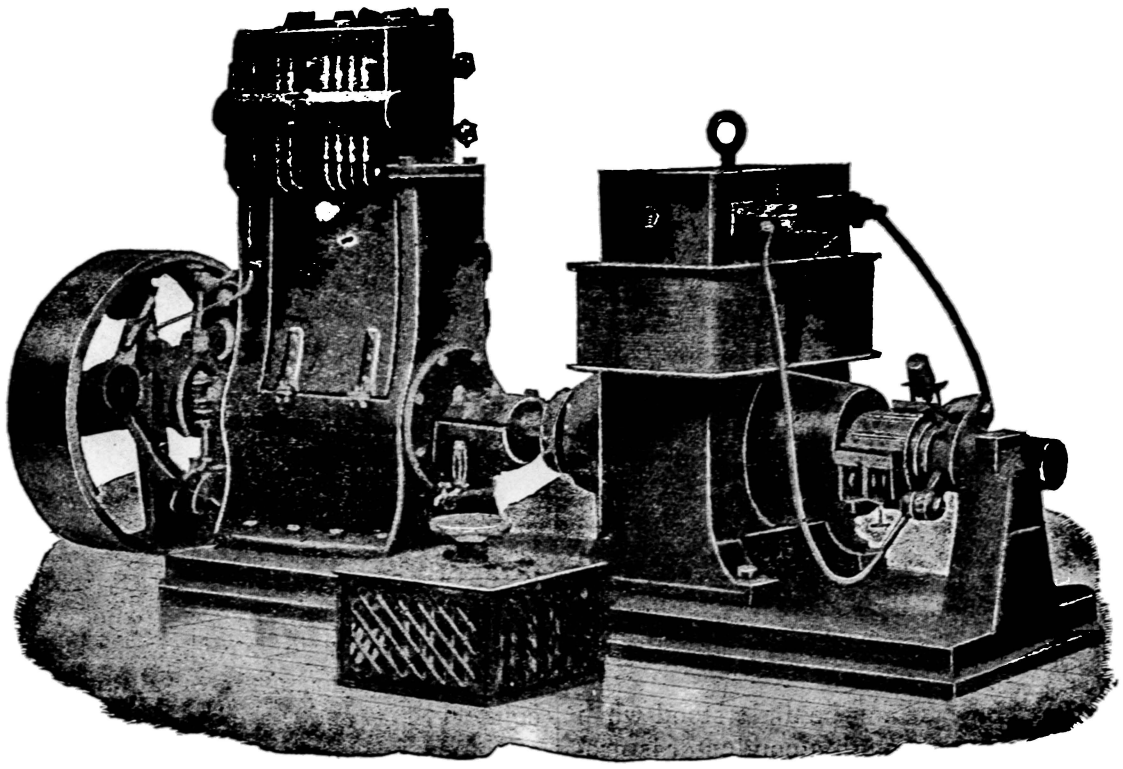

Fig. 3460.

For generators of large size the multipolar designs are used. These differ from those already explained only in that there are four or more poles instead of two. The most common forms are made in accordance with the diagrammatic illustrations, Figs. 3461 and 3462, the first being by far the most common. The difference between the two is that in Fig. 3461 the field magnets are around the armature, A, while in 3462 the order is reversed, the armature being outside of the field. In multipolar machines the poles have to be so disposed that they alternate from positive to negative in rotation all the way around the circle, as is indicated in the two figures by the letters N and S, which stand for north and south. The proper polarity is obtained by winding the field coils and connecting them with each other so that the current may flow around each pole in the direction required for the given polarity. On account of the increased number of poles, the armatures have to be wound differently from those for two-pole machines. This difference can be made clear by the aid of Figs. 3463 to 3471. Figs. 3463 and 3464 show two large armatures in the process of winding. With machines of this size the armature wires become bars and the coils are made of one turn instead of many. In Fig. 3463 one of the coils is shown resting against the

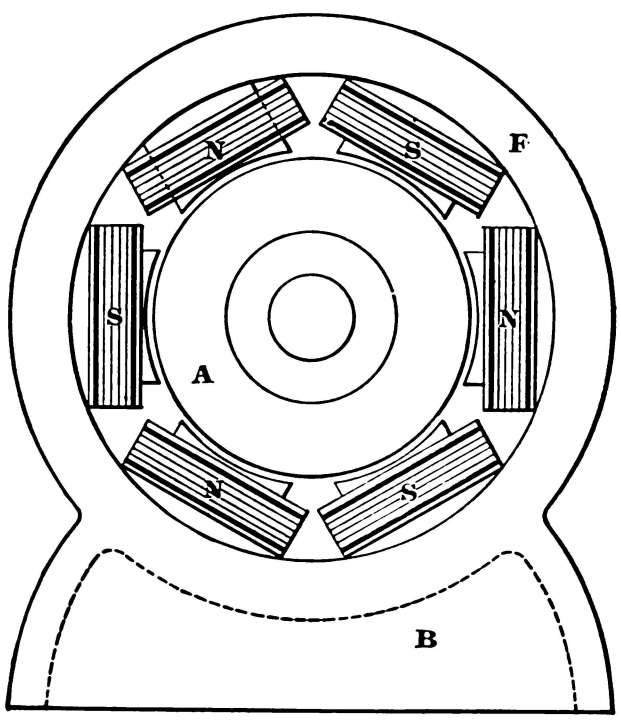

Fig. 3461.

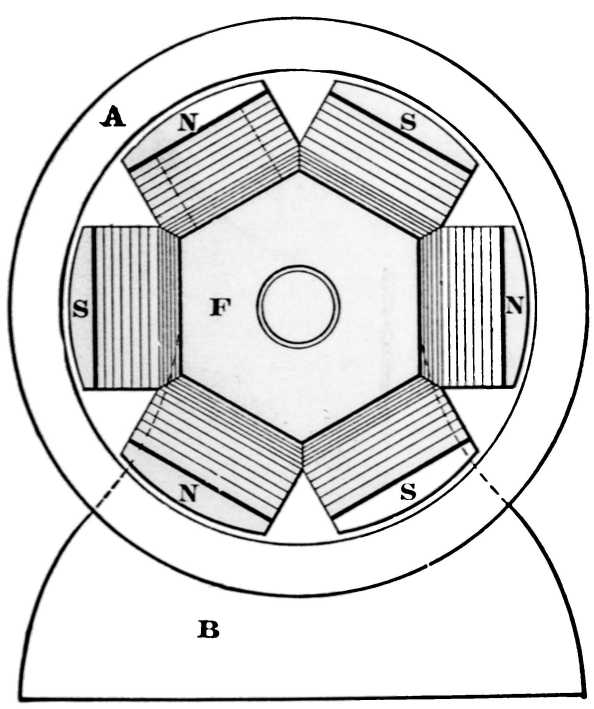

Fig. 3462.

armature. Multipolar armatures can be wound as in these two figures, in which case the winding is said to be of the formed coil type, from the fact that the coils are formed in a machine and are then placed upon the armature core; or they may be provided with a simple ring winding, the same as that used with two-pole machines. If the latter winding is used, the connections can be made, between the coils and with the commutator, in two ways, both of which are represented diagrammatically in Figs. 3465 and 3466, the first being what is called a parallel winding and the second a series winding. The first, or parallel, winding does not differ in any respect from the simple two-pole ring winding. This can be clearly seen from the diagram. Now, as to the action of the armature, it can be readily understood that as the two adjoining poles are of opposite polarity, they can be regarded as forming, within themselves, a complete machine, so that the whole armature with the whole field may be considered as made up of a certain number of two-pole machines spread out in a line. This being the case, it is evident that the current that enters through brush *a* will not flow half-way around the armature to brush *c*, but will stop at brush *b*; that is, if there are four poles, the opposite brushes will be one-quarter of the circle apart, instead of one-half, as in the two-pole machine. If the generator has six poles the brushes will be one-sixth of the circle apart, and one-eighth of the circle for an eight-pole machine. With the winding of Fig. 3465, the current will pass out of the armature by two brushes, *a* and *c*, and will enter by the other two, *b* and *d*, or the reverse, according to which way the machine revolves. If there were six poles, there would be three brushes through which the current would come out and three through which it would enter, and, in any case, for any number of poles, the current would enter through one-half the brushes and pass out through the other half. In this way there would be drawn from the armature as many separate currents as there are pairs of brushes, but the voltage of each current would only be proportional to the number of turns of wire on the armature from brush to brush. In some cases it is desirable to increase the voltage, and when such is the case, the connections of the coils with the commutator must be as in Fig. 3466. If this diagram is traced out it will be found that the back ends of all the coils are connected with commutator segments that are one-quarter of the circle ahead of those to which the front ends attach. The effect of this arrangement is that the current is passed through the four quadrants of the armature one after the other before it passes

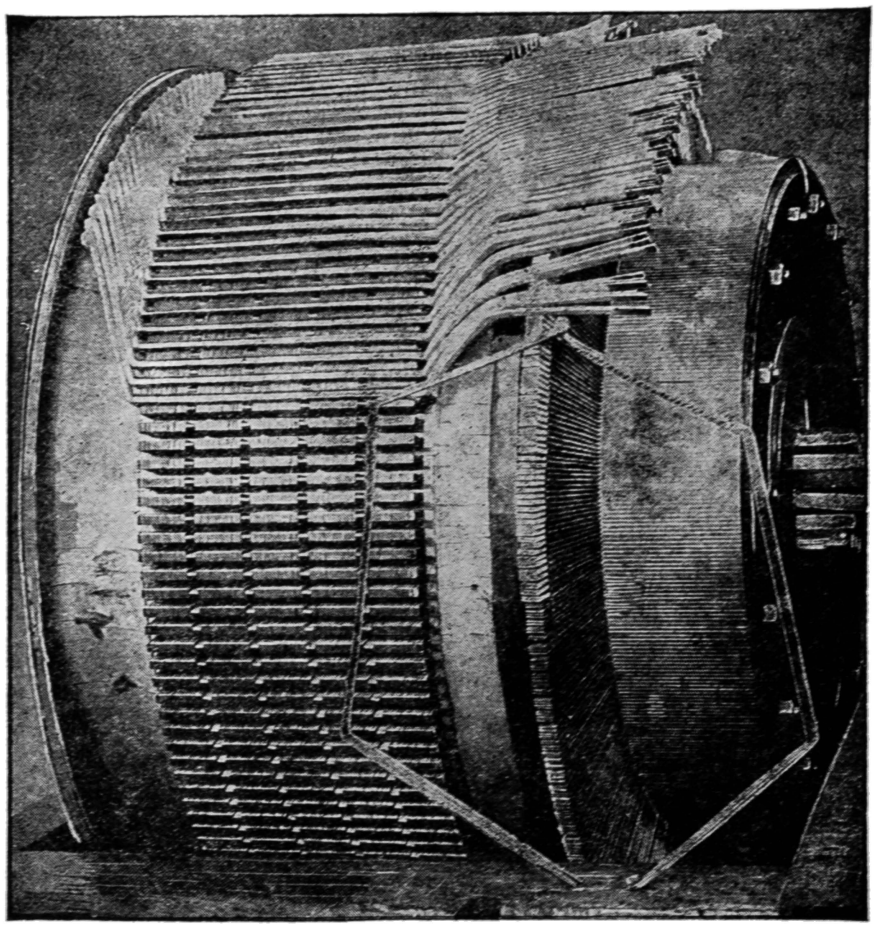

Fig. 3463.

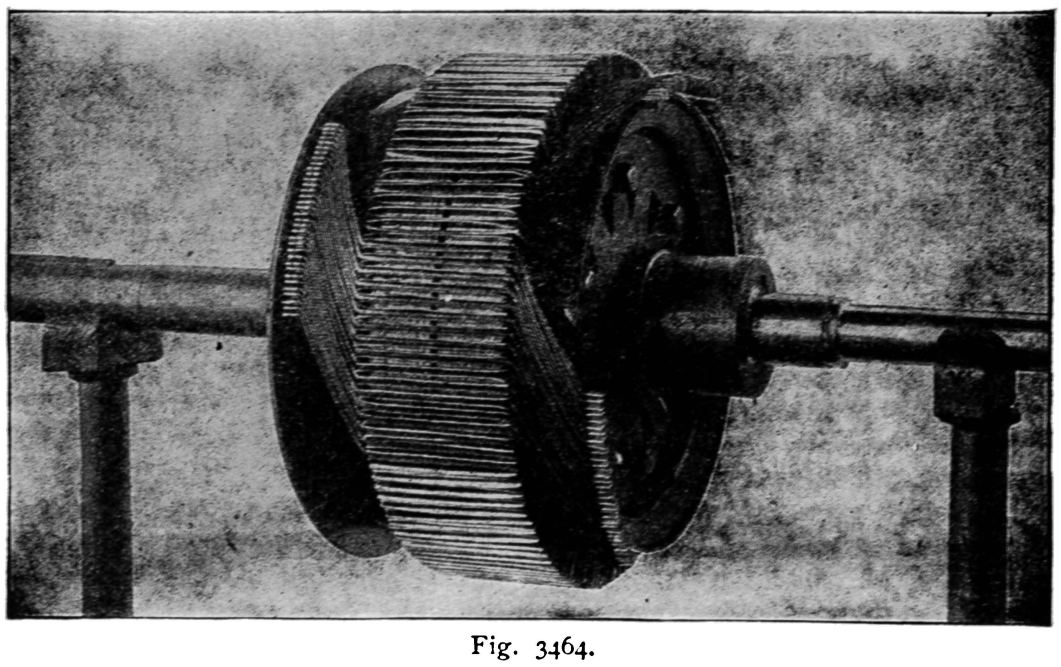

Fig. 3464.

to the external circuit. It is on this account that this style of connection is called "series," for the different parts of the armature wire are connected with each other in series, and, as a result of

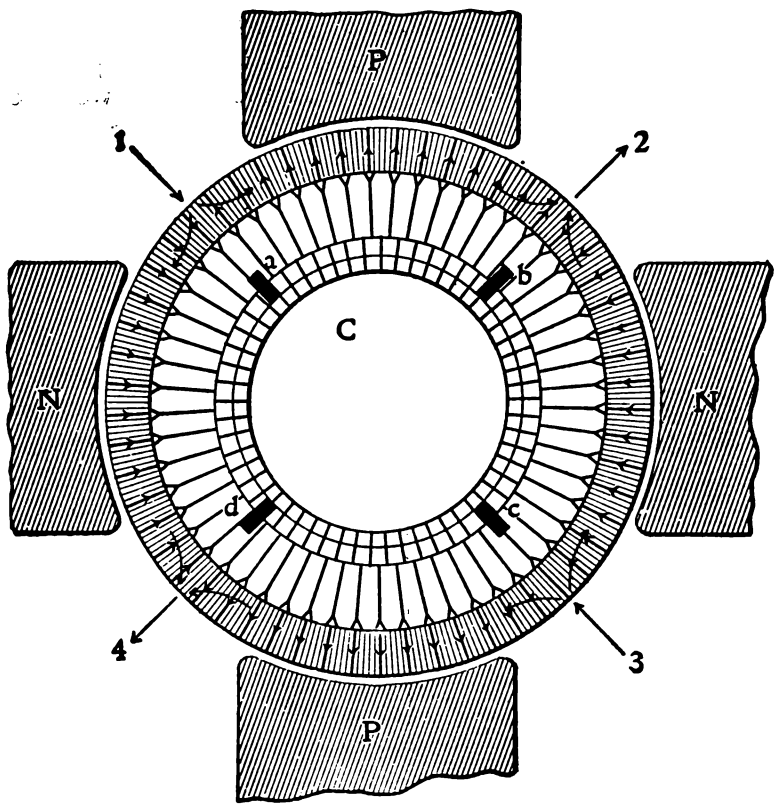

Fig. 3465.

this connection, the voltages developed in the several sections are added. Thus, in the armature shown in the figure, the voltage would be four times as great as if the connections of Fig. 3465—that is, the parallel connection—were used. But it must be observed that while the voltage is increased the strength of the current is reduced, as there is only one circuit; while with the parallel connection there would be four. With the connections shown in Fig. 3466 only two brushes are required, but more can be used if they are properly connected.

As a rule large armatures are wound with formed coils, such as are shown in Figs. 3463 and 3464. When the connections are to be in parallel, the coil ends bend in the same direction at both ends, as in the coils shown in Fig. 3463; but when the connections are to be in series, the ends are bent in opposite directions, so that the coil, instead of forming a letter O, forms a U with the ends spread out. The coils on the armature in Fig. 3464 are for the series connection, and, as will be seen, the ends at the left end of the armature turn upward as they leave the grooves, while the ends at the right turn downward; that is, in opposite directions. This style of winding is commonly called "wave winding." The armature in Fig. 3467 has coils suited to the parallel winding, and, as will be seen, the wires turn in the same direction, at each end of the grooves. This style of winding is called lap winding.

Figs. 3468, 3469, and 3470 show an armature in three different stages of construction; the first when it is ready to receive the wire, the second when completely wound, and the third when the wire at the ends has been covered with protecting canvas and the coils are securely held in place by means of wire bands.

From Fig. 3469 it can be seen that the armature is wave wound, as the wires bend in opposite directions at the two ends.

From Fig. 3471, a fair idea can be formed of the manner in which the coils are insulated from each other and from the armature core, and also as to the manner of the connections with the commutator segments. Considering the connections with the commutator first, it will be seen that the two ends of each coil connect with commutator segments, twice as far apart as the space spanned by the coil upon the armature surface. This is necessary, owing to the fact that the ends must connect with segments that are under the alternate brushes, and the sides of the coils must only be as

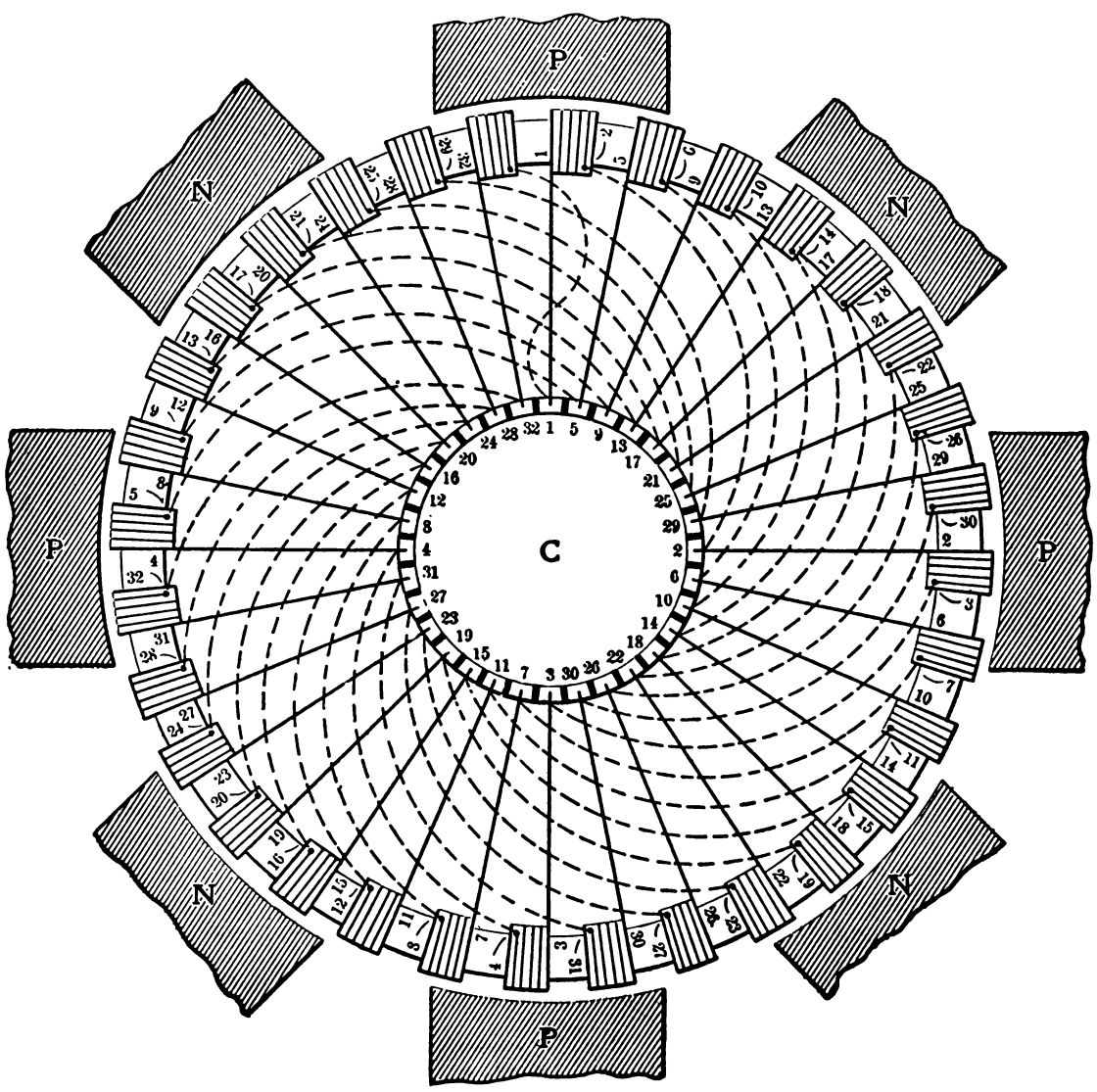

Fig. 3466.

far apart as the distance from brush to brush. The coils, which in this armature are flat copper bars making one turn to the coil, are well covered with an insulating material, and their ends are soldered into grooves shown in the ends of the commutator seg-

ments. In the grooves in the armature surface the coils are further insulated by additional strips of insulating material, as can be plainly seen from the upper part of the figure. At the ends, the second, the core with the coils in place; and the third, the finished armature. In this figure it will be seen that the coils bend down over the armature's core ends, and the same construction is

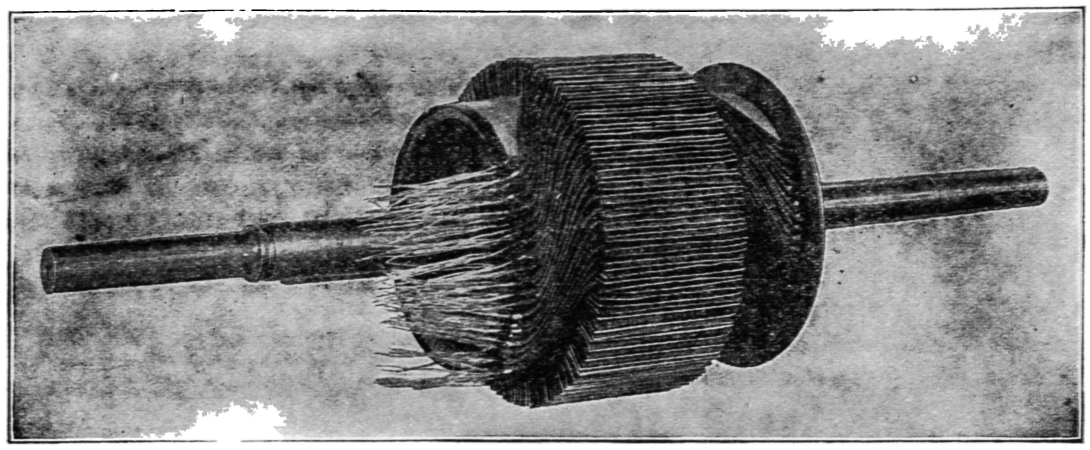

Fig. 3467.

where the coils lap over each other, an insulating separation is provided, as can be seen at the right-hand side of the armature; that is, the end away from the commutator. adopted in many generators, in fact in the great majority. Those who make the armature with the coil ends running parallel with the shaft claim that that form of construction is the best, on account

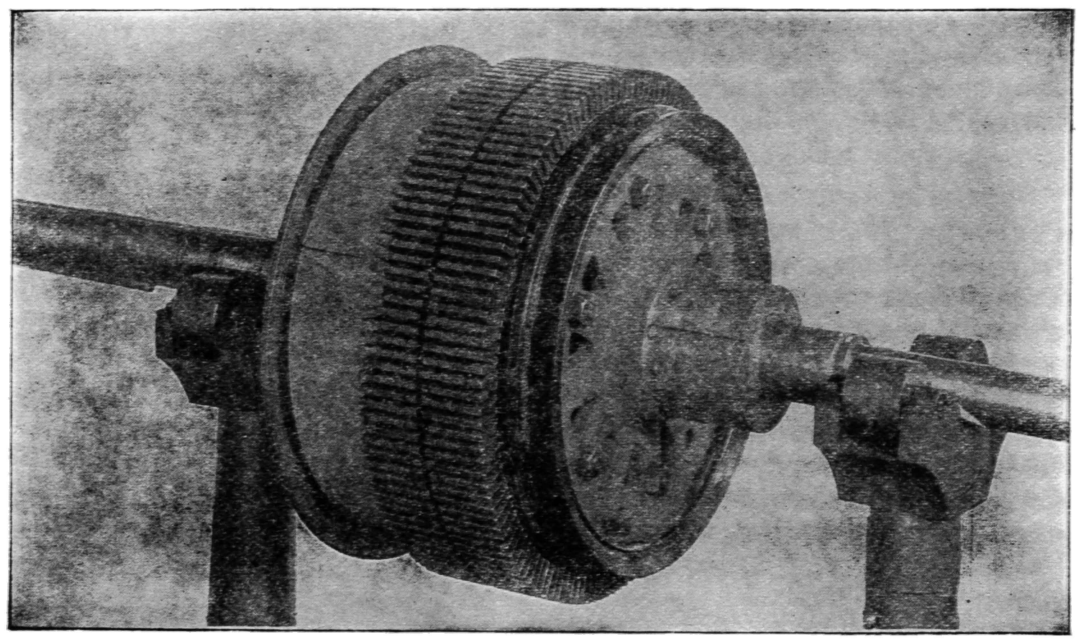

Fig. 3468.

In the armatures so far shown the ends of the coils, after passing out of the grooves, run parallel with the shaft and rest upon flanges provided to hold them. This construction is not universal, however, of there being a solid metallic bed for the wire to be pressed down upon, thus rendering it impossible for it to be thrown out of place by the centrifugal force when in rotation. Those who use the

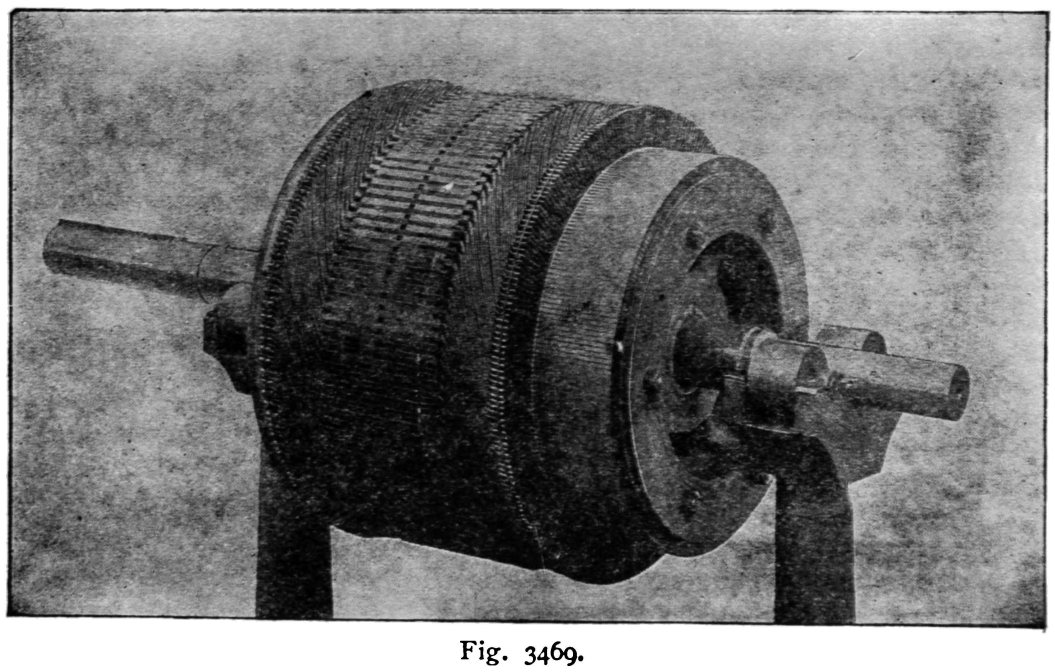

Fig. 3469.

and in many cases the ends bend down toward the shaft, as is shown in Fig. 3474, which represents a railway motor armature in three stages of construction; the first being the bare iron core; design in which the coil ends bend down, claim that it is the best, as it is not necessary to make the shaft so long. It is evident that both styles of construction have their advantages, but it is difficult

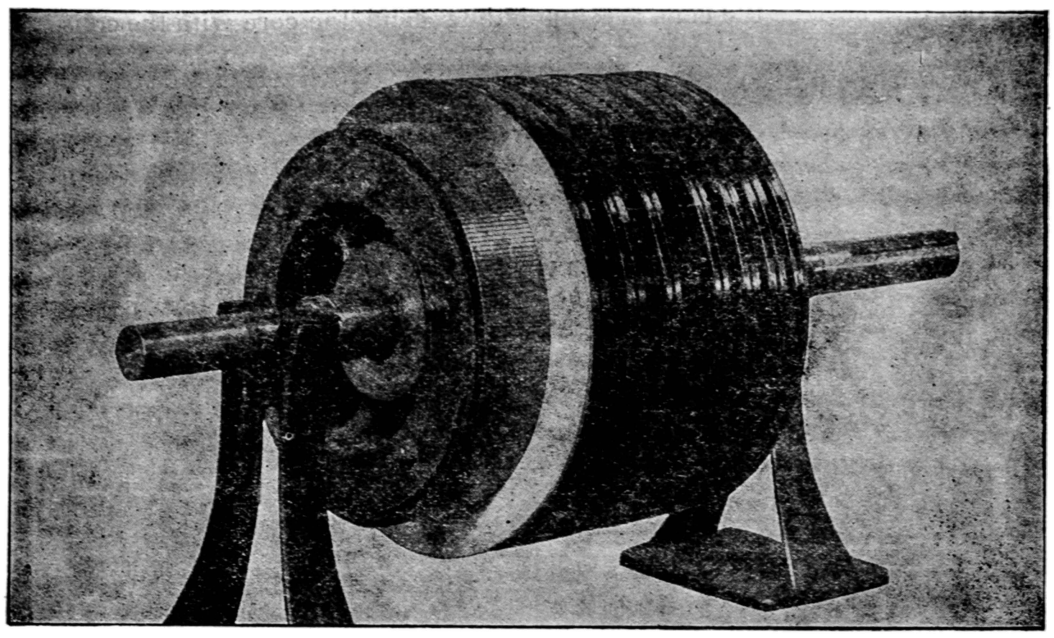

Fig. 3470.

to say which is the best, and perhaps the real truth is that each one is the best for certain cases.

Fig. 3475 shows a small armature with the coils bent down at the ends, while the armature in Fig. 3476 has the ends bent down at the back and parallel with the shaft at the commutator end. If they were bent down at both ends, the commutator segments could be made with shorter arms, as is shown in the diagram, Fig. 3477, in which it will be seen that the wires running to the commutator segments pass out from the lower ends of the armature coils.

Figs. 3472 and 3473 show two views of a large armature of the type used with the internal fields illustrated in the diagram, Fig. 3462. Fig. 3473 shows the bare armature core, and Fig. 3472 the same when the coils are in place. The manner in which armatures of

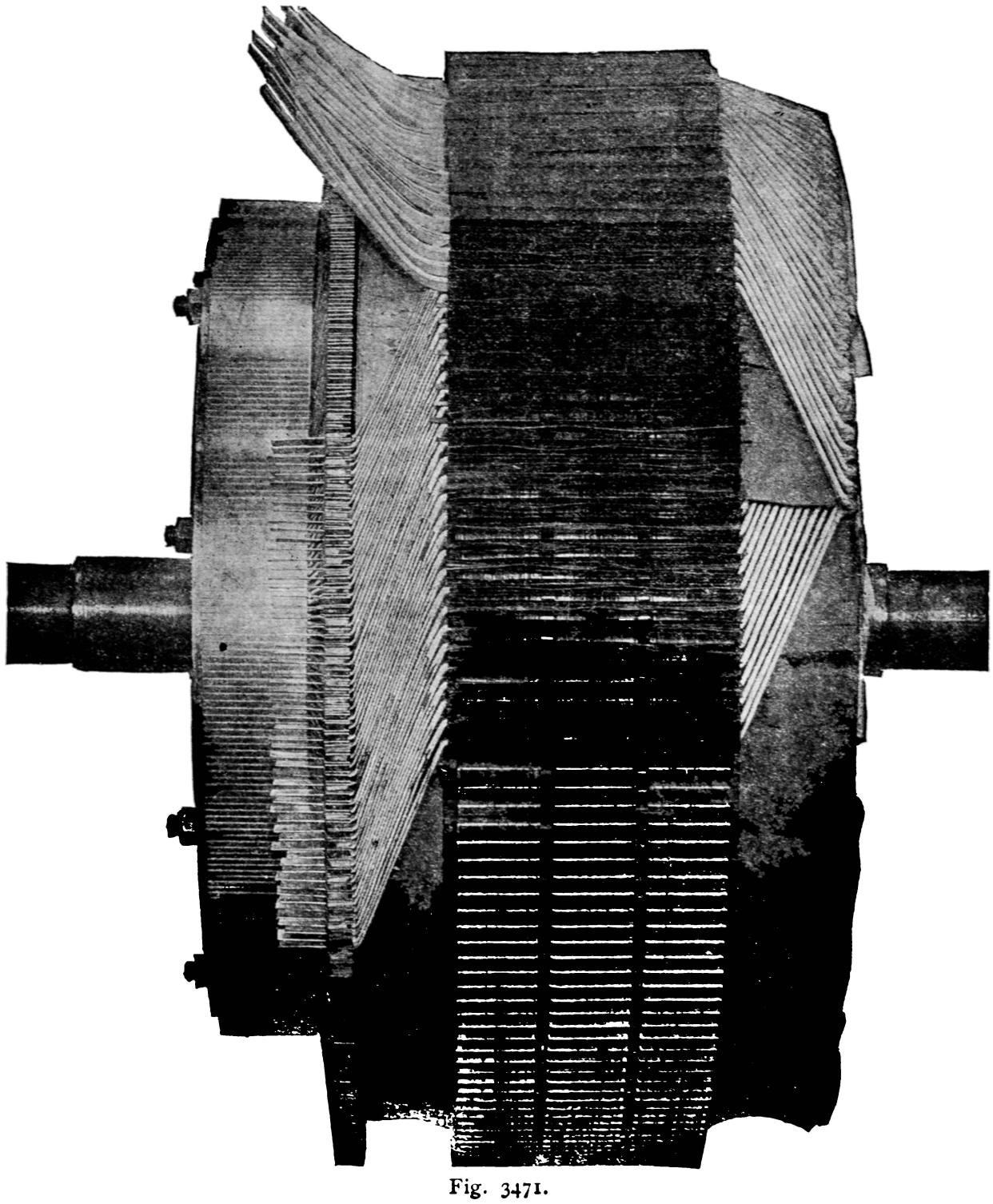

Fig. 3471.

this type are wound can be understood from Figs. 3478 and 3479. In this armature the outside surface forms the commutator, and for this purpose the coils are made as is shown in Fig. 3480, from which it will be seen that the portion that forms the commutator is much heavier in every respect. This reënforcement is necessary, owing to the fact that the constant rubbing of the brushes against the commutator surface wears it away, and if it were not made thicker the armature would soon have to be re-wound.

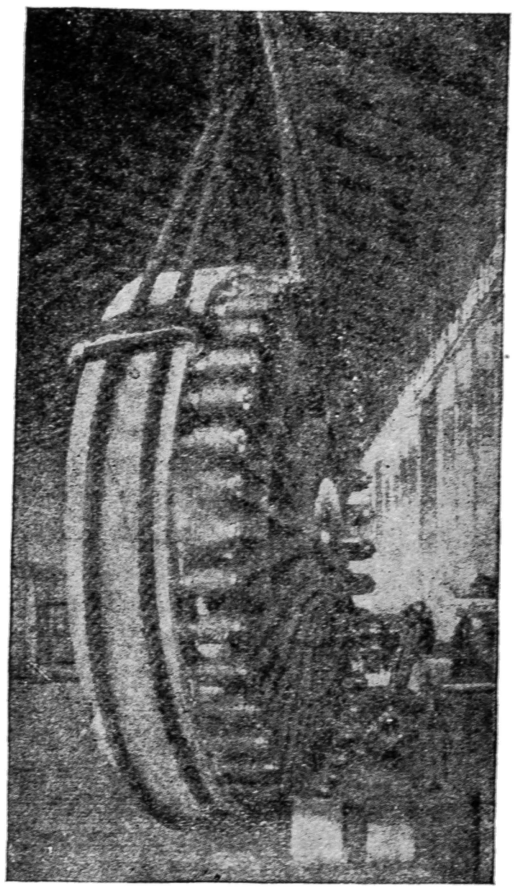

Fig. 3472.

In winding armatures it is very necessary that the insulation between the various coils, and between the coils and the core, be as perfect as it is possible to make it, for if not, the current will jump across any weak spots, and thus form what is called a short circuit, and burn out the coil. If there were any metal possessing insulating properties, it would not be difficult to obtain perfect insulation, for then all the parts could be made strong; but, unfortunately, all insulators are of the nature of wood, paper, cloth,

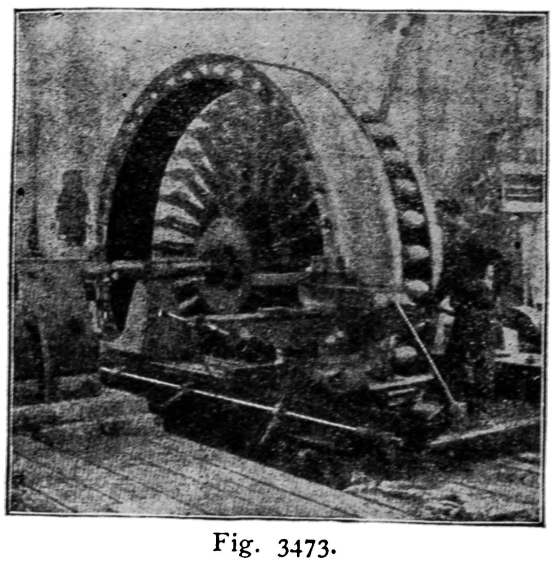

Fig. 3473.

mica, and similar substances, that are mechanically weak. A great deal of ingenuity has been expended in devising insulations that would be strong mechanically, and at the same time satisfactory from an electrical standpoint. For armatures the best materials are cloth, specially prepared paper, vulcanized fibre, mica, and silk. Small armatures are, as a rule, insulated with paper and cloth, but for large machines, and particularly if the voltage of the current is high, say 500 volts or more, mica is largely used. Mica alone cannot be employed, owing to the fact that it is brittle and would soon crumble away, but when it is combined with cloth it forms the best known insulation. It is the best because it resists the passage of electric currents better than any other substance that can be used for the purpose, and, in addition, is hard, and can, therefore, be made to give a considerable mechanical support, providing it is reënforced with paper or cloth so that it cannot disintegrate. As moisture is a great destructor of insulation, it is necessary to render armatures as nearly waterproof as possible, and this is generally accomplished by an abundant use of shellac varnish, which is applied as the work of putting the coils in place progresses, and after they are all on. After an armature is completely finished, so far as the winding is concerned, it is subjected to several coats of varnish, and is examined carefully all over the surface, and if any openings are found these are filled up entirely with shellac.

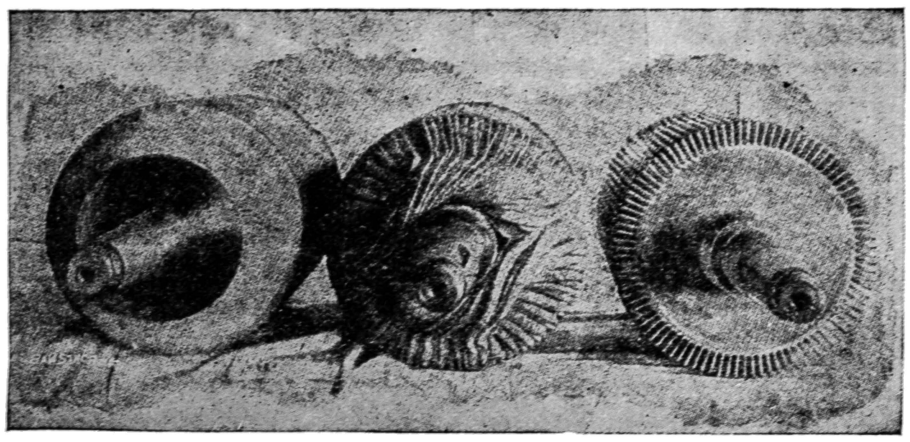

Fig. 3474.

As an armature revolves at a high velocity, the centrifugal force of the coils is very great, and, as a consequence, unless they are held in place by strong bands, they will be liable to be thrown out. These bands are made of brass wire in small armatures, and are soldered together, but for large armatures steel wire is the best, as it expands at about the same rate as the iron core of the armature, and on this account is not liable to get loose when the machine gets hot, as it surely will when running anywhere near its full rated capacity.

The commutator is about the most important part of a continuous current generator, and unless made with great care, will give no end of trouble. If it is not perfectly round and smooth the brushes will not remain in contact with the surface all the time, but will be thrown off every time the high side comes around. The effect of this will be that the brushes will spark badly, for when they leave

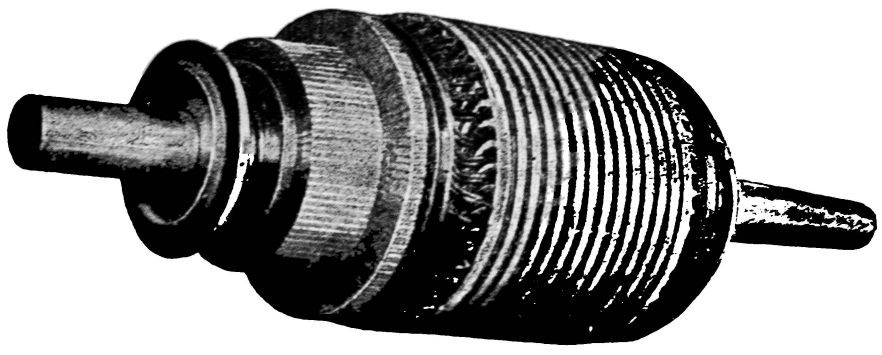

Fig. 3475.

the commutator surface, the electric current must jump from their ends to the segments, and this it can only do by forming a spark. These sparks burn away the metal, and, as a result, the surface soon becomes rough, and this causes the brushes to jump off further, thus aggravating the difficulty. From this it will be seen that it is necessary to turn up the commutator surface with great care so as to have it run perfectly true. But even when this is done, there is no assurance that trueness will be maintained, unless the structure is so solid that it cannot move, either by the action of centrifugal force, or by the effects of expansion and contraction. The commutator segments are made generally of copper, and the insulating separation between them is of mica, which is built up to the required thickness by sticking together a number of layers with shellac. When the shellac is cold it is sufficiently

hard to prevent the structure from working out of shape, but under the influence of the heat generated by the friction of the brushes and the sparking, the varnish becomes warm, and then is so small that there is little danger of its working out in subsequent use.

When an armature is built up so that the outer surface forms

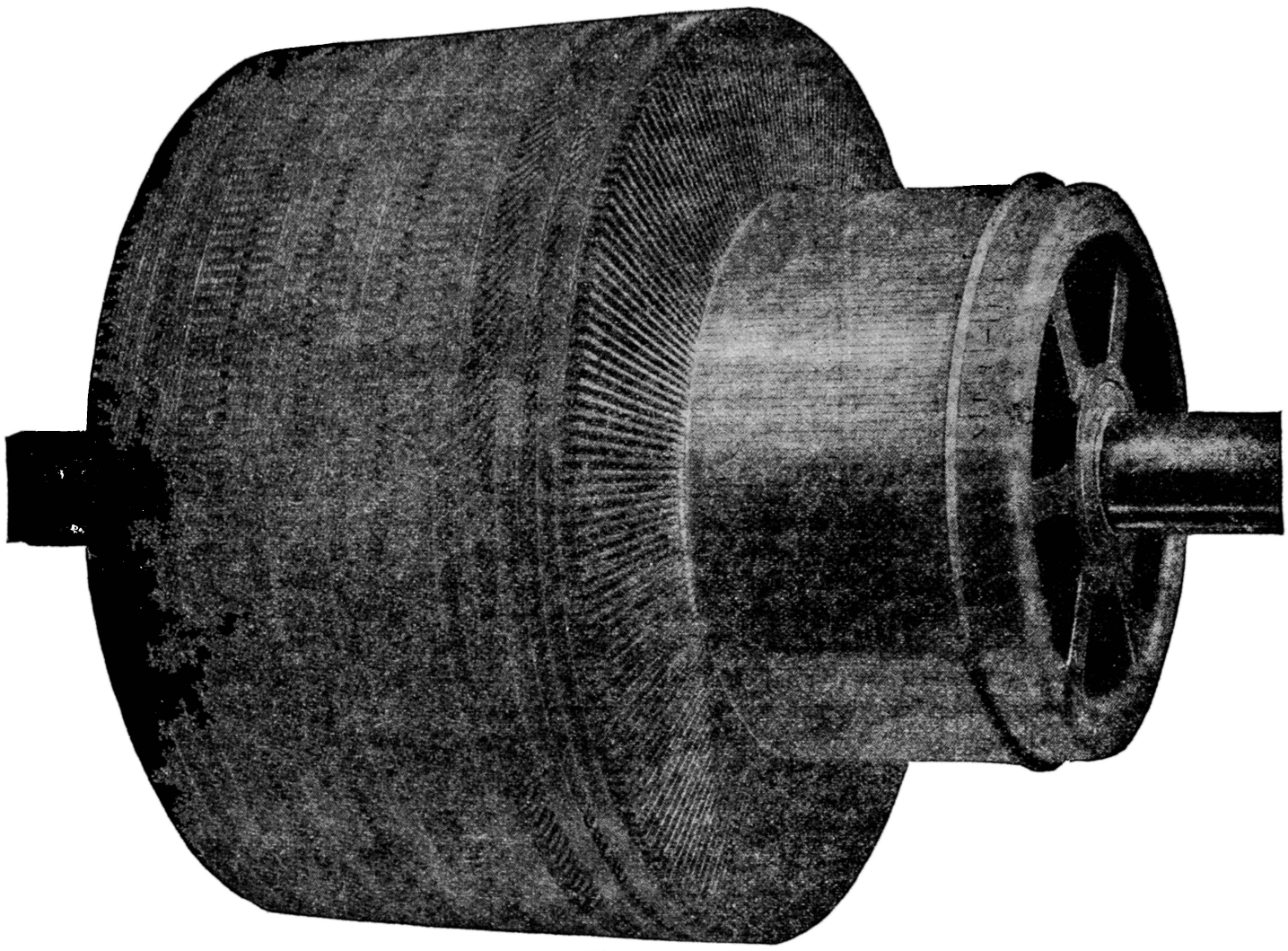

Fig. 3476.

softens up enough to be forced out from between the layers of mica, thus leaving the segments loose. To avoid all this, it is customary to press the segments up with all the pressure that can the commutator, it is very difficult to make it solid, but with sufficient care it can be done. The outer surface of the core, Figs. 3478 and 3479, must be covered with cloth and mica laid on so

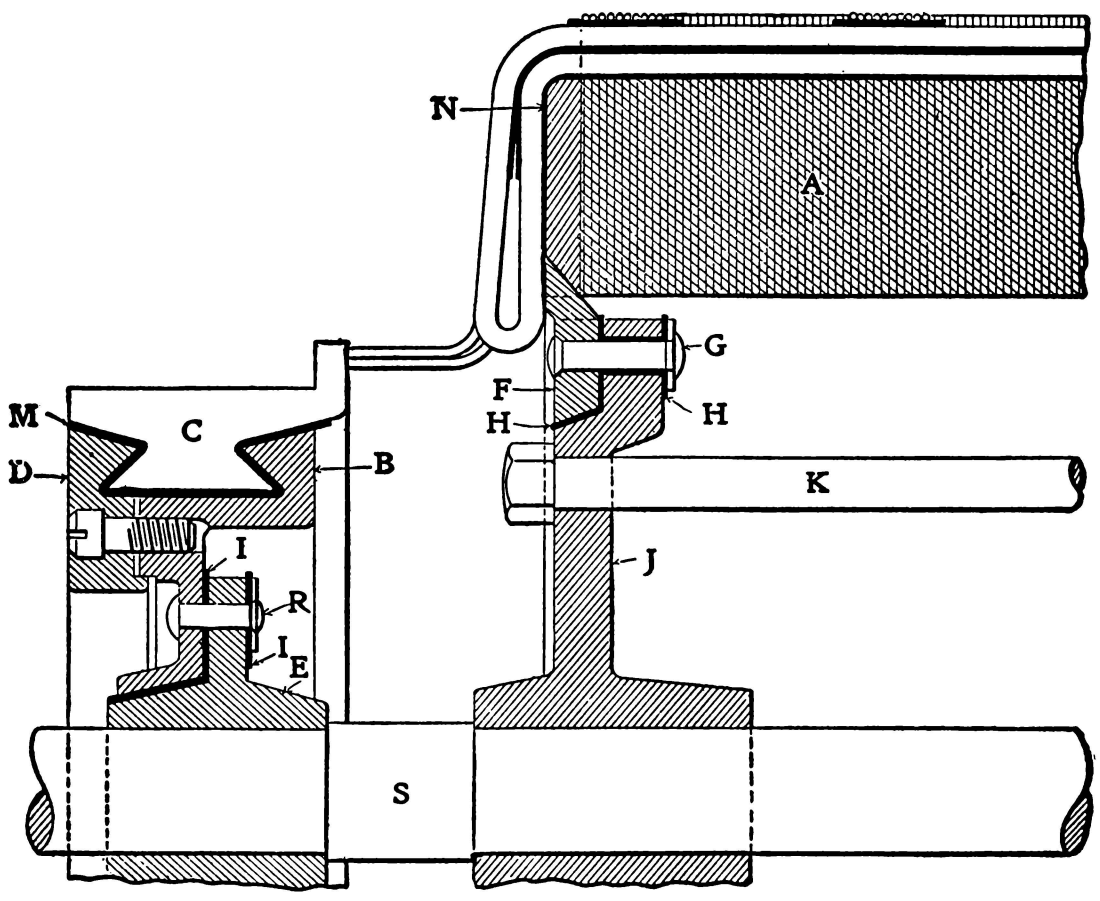

Fig. 3477.

be applied conveniently, and then to place the commutator in an oven so as to warm it up, when it is further compressed. By this process of construction the sheets of mica are brought practically into actual contact, and the amount of shellac left between them tight as to leave no slack. This much being done, the two parts of the coil, the U bar and the commutator bar (see Fig. 3480), are pressed firmly into position, the U bar against the inside of the armature core, and the commutator bar against the outer side.

In addition to this it is necessary that the bars be pressed against each other as tightly as possible. If, after the entire armature has been covered, there should be any places where the bars do not come down to a solid bearing, it will be very difficult to turn the face off true, and even if it can be accomplished, the centrifugal force when the armature is running will tend to throw the surface out of true. Fortunately, these armatures do not run at very high velocities, and, as a consequence, the brushes can follow up the inequalities of the surface even if it is so much out of true as to be easily seen with the naked eye.

Fig. 3478.

Commutator segments wear out in time, and when this occurs it becomes necessary to provide a new commutator, which is an expense, not only on account of the cost of the new part, but also because it is necessary to disconnect the old one and then connect the new one. To get around this expense as far as possible, the manufacturers of the armature shown in Fig. 3476 construct the commutator segments so that the part to which the wires are attached does not have to be removed. At the outer end of the commutator in this construction, there is provided a row of screws that serve to hold in place pieces that form the surface of the commutator segments. When these are worn out, it is only necessary to remove the screws and replace the old with new parts, and then the commutator is the same as when first made. This plan is only adopted by one concern—all the others preferring to use solid segments. One company facilitates the renewal of commutators as much as possible by furnishing full sets of segments pressed up into the proper size and shape and held in place by strong wire bands, so that all that is required is to remove the old segments and substitute for them the new ones. How these sets of segments are prepared can be seen from Figs. 3481 to 3487, inclusive, and from these figures can also be obtained an idea of the various modifications in the shape of the segments.

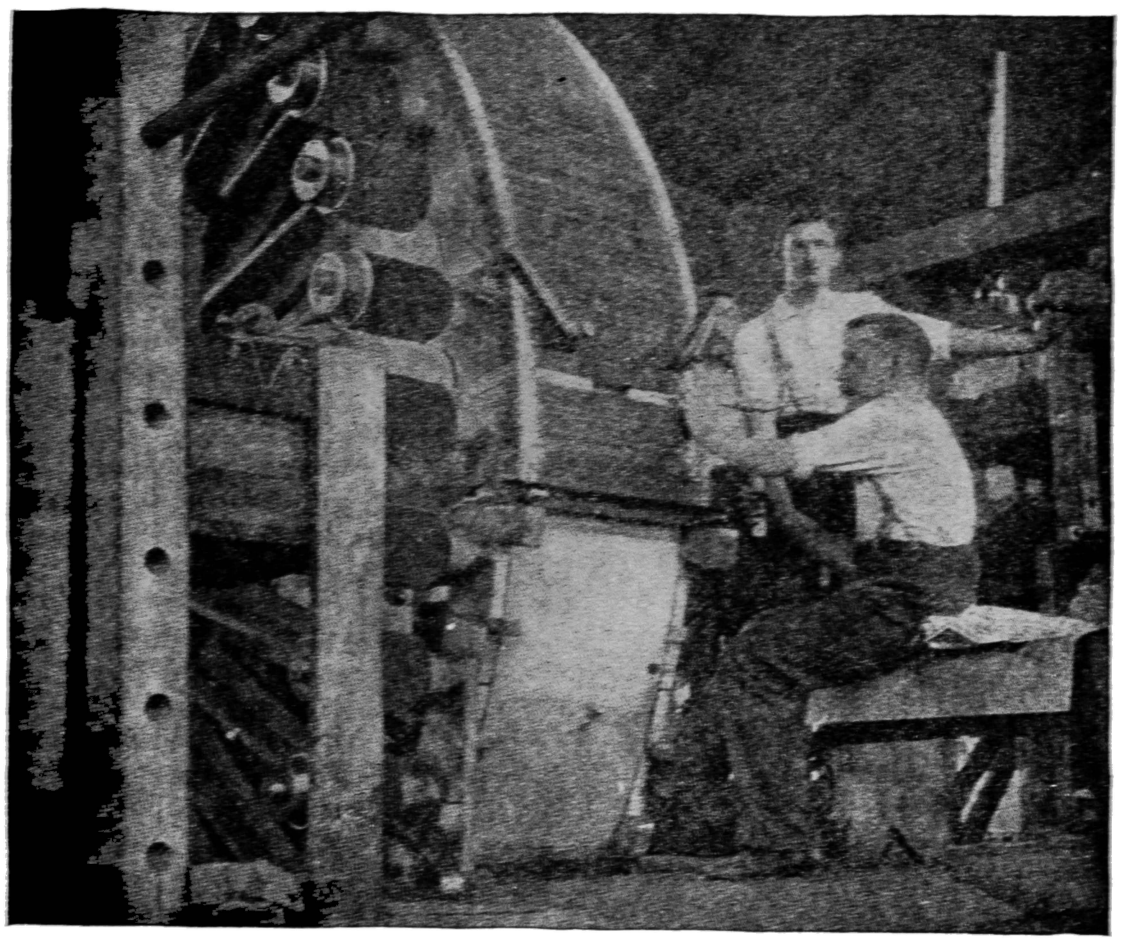

Fig. 3479.

Fig. 3488 shows the clamping device used to press the commutator segments into place. At the right-hand side of the cut is shown a commutator ready to go into the clamp, and at the left-hand side it is shown with the clamp in position.

If the insulation between the segments is too thick it will not be possible to compress the commutator down to the proper diameter; that is, so that the segments will come to a bearing against the supporting hub. On the other hand, if the insulation is too thin, they will bring up against the bottom without pressing tight enough against each other; hence, it is a nice point to make the insulation just the right thickness, which is readily accomplished after a little practice.

In the arrangements shown, the wires are fastened to the commutator segments by means of solder, but this is not the only method practised. Some manufacturers prefer to use screws, claiming this form of construction facilitates the replacement of the commutator when the segments wear out, it being less trouble to loosen up the screws than to unsolder the joints. As the renewal of commutators is not a thing that has to be done every day there is little force to this argument.

In the construction of the armature cores as much care must be taken as with the armature. This is, in fact, one of the parts of an electrical machine upon which a great deal more work is expended than would be supposed from the external appearance. When an armature is covered with wire there is no indication,

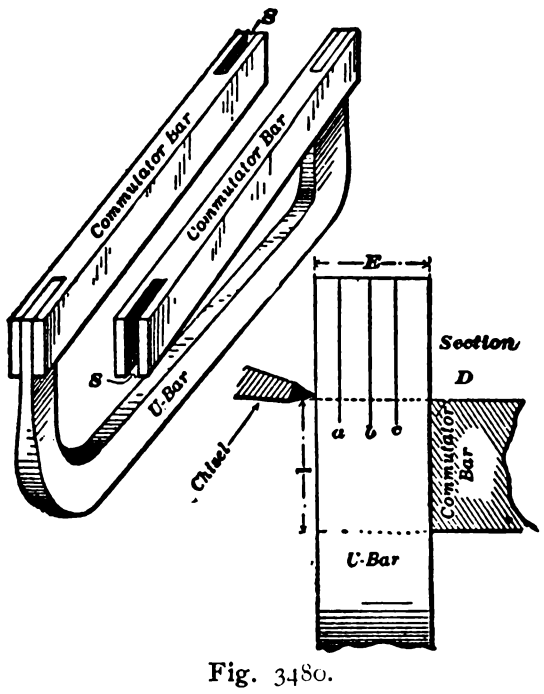

Fig. 3480.

from the outside, of how the internal part is constructed, but when the process of construction is understood, it is found that the work in sight is but a small portion compared with that which is concealed. When an armature revolves between the poles of the field magnets, the current is generated in the wires, not because they are of copper, as is sometimes supposed, but because they cut through the lines of force of the field, as we have already explained. Now, if there is any other part of the structure that cuts through the lines of force in which a complete electric circuit can be formed, in this part electric currents will also be developed. On this account, if the core is made in the form of a solid mass of iron, it will be the seat of very strong currents. In the early days of electric lighting there was a great deal of trouble experienced with armatures that warmed up so much as to char the insulation and then become short circuited. It was also found that the electric currents developed were out of all proportion to the power required to drive the machine. Investigation soon revealed the fact that as the armature cores were solid castings, the currents developed in them were greater than those in the wire proper. Now, when electric currents circulate in a conducting mass they develop heat, the amount of heat being directly in proportion to the power absorbed in developing the currents. This then accounted at once for the heating of the armature, as well as for the great expenditure of power compared to the current actually developed in the wire itself. As can be readily surmised, the remedy for this defect is to so construct the armature core that there may be no electric circuit in it for currents to flow in. This can be accomplished by laminating it and separating the laminations by means of paper or some other non-conductor of electricity. The laminations, however, must run in the right direction, for if not, they will only serve to cut the current up into numerous small currents, each one flowing in an individual lamination. The proper direction in which to place the laminations is at right angles with the wires in which the current proper is generated; for these wires are set in the best position for the cutting of the lines of force, hence a position at right angles to this is the worst.

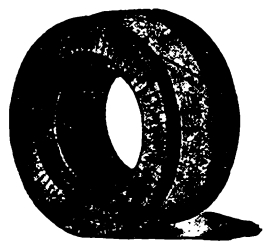

Fig. 3481.

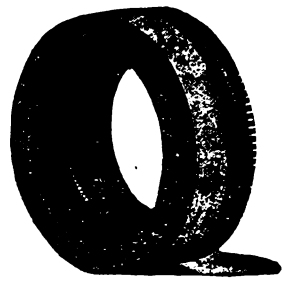

Fig. 3482.

Laminated armature cores are built up of many thicknesses of sheet iron, which is generally not over No. 24 or No. 22 gauge. In building up, the core layers of sheet iron and of paper are placed alternately upon each other until the proper thickness is obtained. These are then firmly pressed up and secured, and the outside surface is trued up.

From Figs. 3489, 3490, and 3491 the method pursued in constructing small laminated armatures can be understood. In Fig. 3489 the shape of the pieces of sheet iron of which the cone is made up is shown. These are punched out of strips of metal in

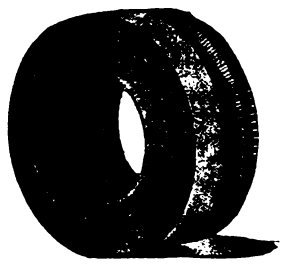

Fig. 3483.

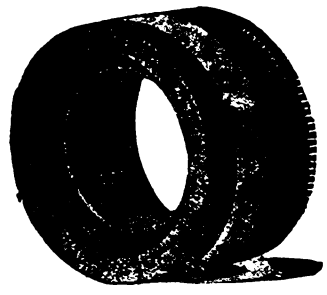

Fig. 3484.

the manner indicated. So as to save the trouble of placing paper and iron blanks in position alternately, the iron is covered on one side with paper before the pieces are punched out of it; then all that is necessary is to lay these in place, and as each piece has a paper covering on one side, the labor of placing the paper in place separately is saved. The blanks, after being cut out, have holes punched in them so that they may be riveted as indicated in Fig. 3491, which shows the design of clamping device used for the purpose of holding the core while it is being riveted. In building up the core the blanks are placed so as to break joints brick

Fig. 3485.

Fig. 3486.

Fig. 3487.

work fashion. Fig. 3490 is a top view of the clamping device shown in Fig. 3491.

Fig. 3492 shows the manner in which larger armature cores are built up, and also the form of the blanks of which they are constructed. In this figure it can be clearly seen that the laminations run at right angles to the wires in which the current is induced, for these wires are placed in the grooves on the surface of the core. These grooves run parallel with the shaft, while the sheet-iron laminations are at right angles to the shaft. As the sheet-iron laminations, on account of being so thin, are not sufficiently stiff to retain their place at the sides of the core, they are here

supported by strong rings which are, as a rule, made of cast iron. In Fig. 3492 the laminations are shown resting upon the end piece. A similar casting is placed on the top when the proper thickness of laminations has been put in place. As electric currents would be induced in these end castings if the magnetic lines of force cut through them, to avoid this the width of the laminated portion of the armature core is always made equal to that of the pole pieces, so that the solid ends of the armature come outside of the path of the lines of force.

The motion of the armature causes the lines of force to sway to and fro in the ends of the pole pieces of the field magnets, and, as a result, electric currents can be induced in these. These pole-piece eddy currents, as they are called, are not, as a rule, very strong, but are sufficient to heat the metal considerably; therefore in large machines it is customary to make the poles laminated. This construction not only helps to keep the whole machine cooler, but also increases the efficiency, as less of the applied power is expended uselessly. There are several ways in which laminated pole pieces can be made, but whatever the construction, the laminations must run in the same direction as in the armature core. From Figs. 3493, 3494, and 3495 a general impression of the methods to be pursued can be formed. In Fig. 3493 the sheet iron, as will be seen, is much thinner than in Fig. 3494; but in both it will be noticed that at one end the blocks are dovetailed. This end is secured in the cast metal which forms the main body of the field magnet structure, and the dovetail form is given so that the iron cast around may hold them securely in place. Fig. 3495 shows the manner in which the poles are held in their proper position when placed in the mould preparatory to the pouring of the cast iron. The framework holding the pole pieces in this casting is simply temporary and is removed as soon as the casting is finished.

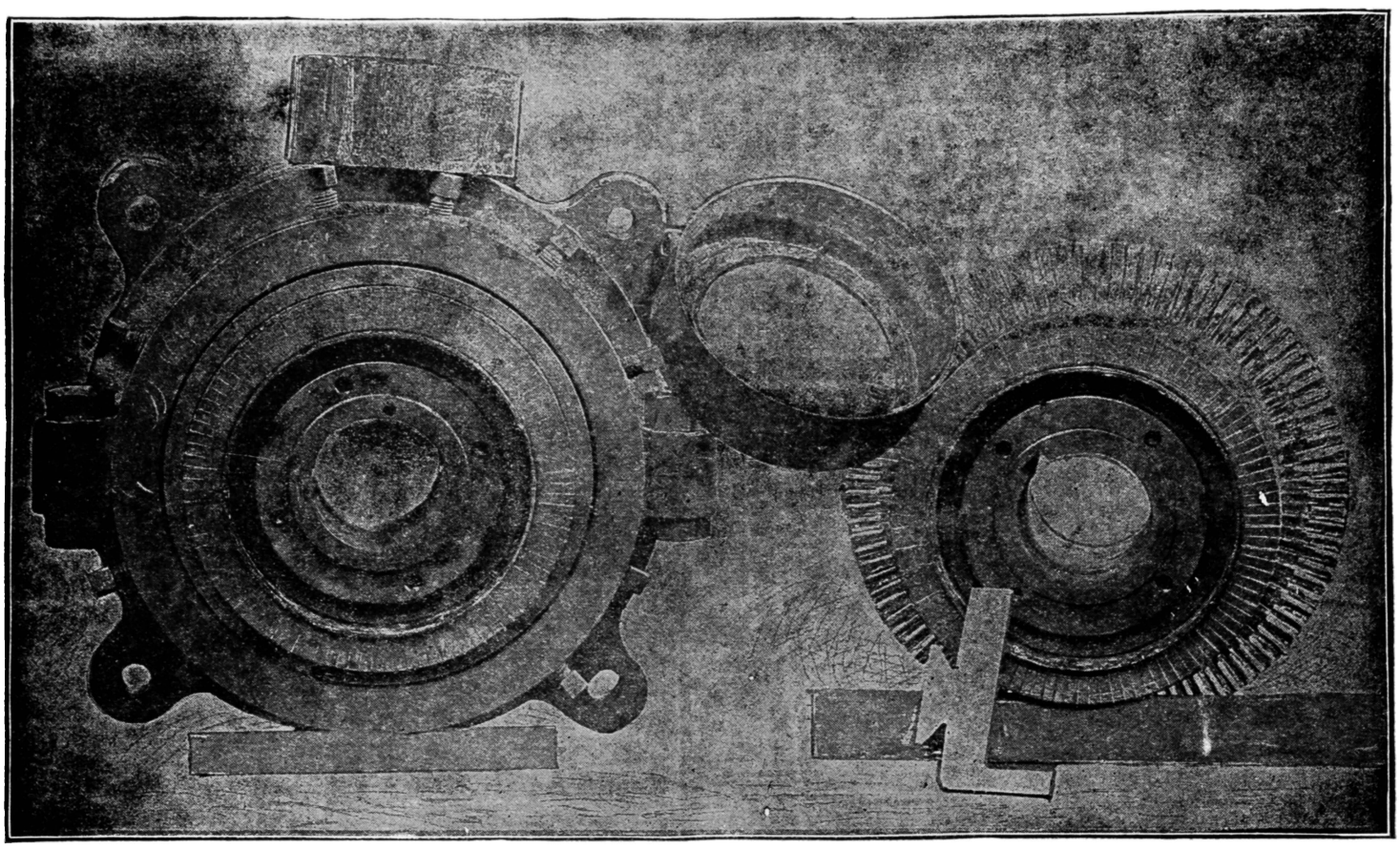

Fig. 3488.

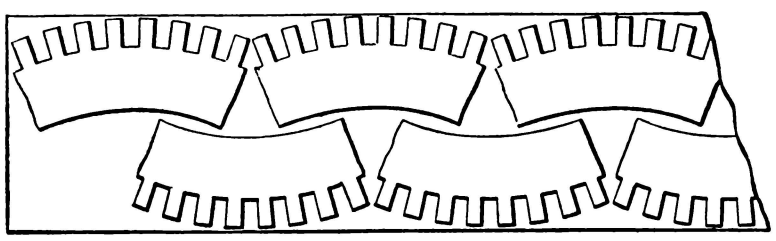

Fig. 3489.

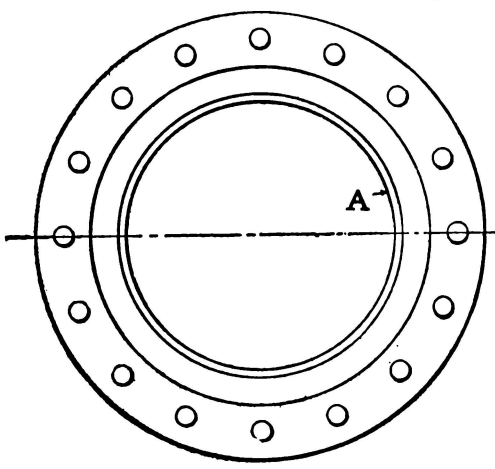

Fig. 3490.

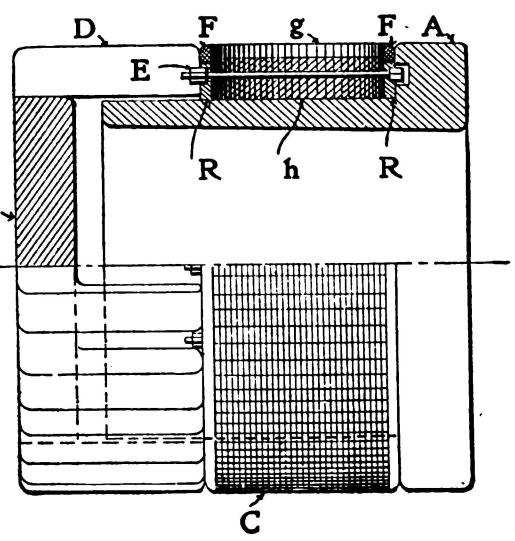

Fig. 3491.

Some manufacturers make the pole pieces with a finished surface at the end that rests against the field ring, and then secure them in their proper positions by means of bolts. The pole pieces shown in Fig. 3495 are cast in a field magnet such as is used in the

machine Fig. 3499, and from an inspection of this illustration a better idea of the exact position of the poles in the structure can be obtained.

In order that a generator may operate satisfactorily, it is necessary that the distance between the ends of the pole pieces and the

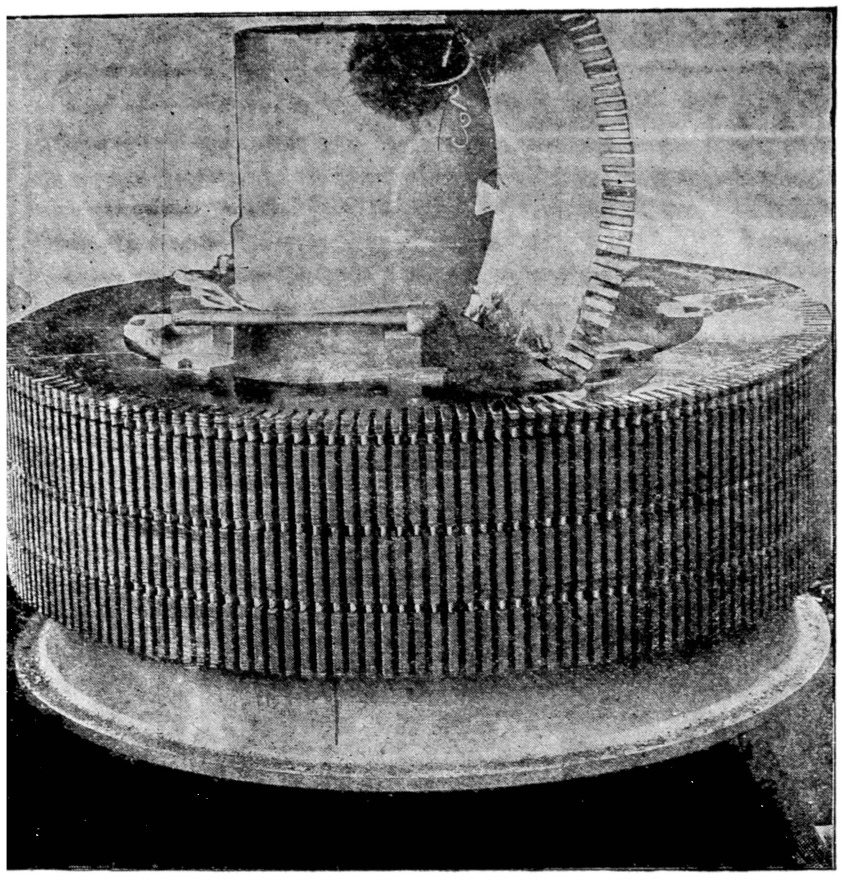

Fig. 3492.

armature be the same at all points ; therefore, the two parts must be turned off true. If the machine is small the clearance left between them is small, not over one-sixteenth of an inch, but as the size of the armature increases, the clearance, or air gap, as it is called, is widened, reaching as much as one-quarter of an inch in large generators.

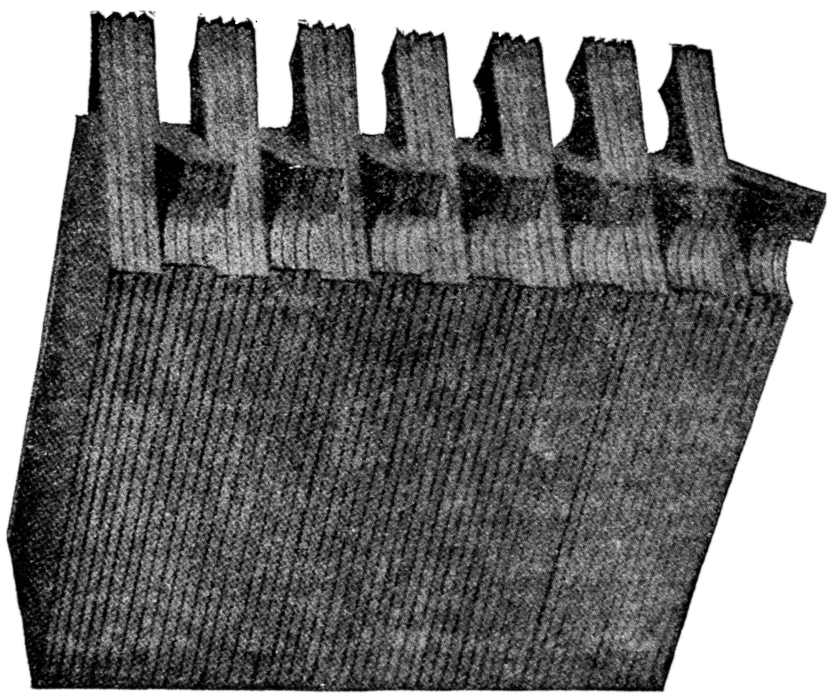

Fig. 3494.

In most of the armatures shown in the preceding illustrations the core is provided with grooves in which the wires are placed. This construction is not universal, as will be observed from the fact that in the armature shown in Figs. 3478 and 3479 the core is perfectly smooth. The grooved construction is used in almost every case in large machines, because it protects the wire from injury from external causes, and at the same time increases the capacity of the generator for a given size of field magnets. This gain is due to the fact that as iron is a much better conductor of magnetism than air, it requires much less magnetizing current in the field magnetizing coils to give the same strength of field when the armature core is grooved, and the distance between the face of the poles and the surface of the core is made less than it would be if there were no projecting teeth between the wire coils.

Having described the details of construction of the armature

Fig. 3493.

cores, the armature windings, the field windings, the pole pieces, etc., we will now proceed to consider the generator in its entirety, and in this connection will be able to explain the action, as well as the constructive features, of several parts that have not, so far, been referred to.

The first machines that will occupy our attention will be those

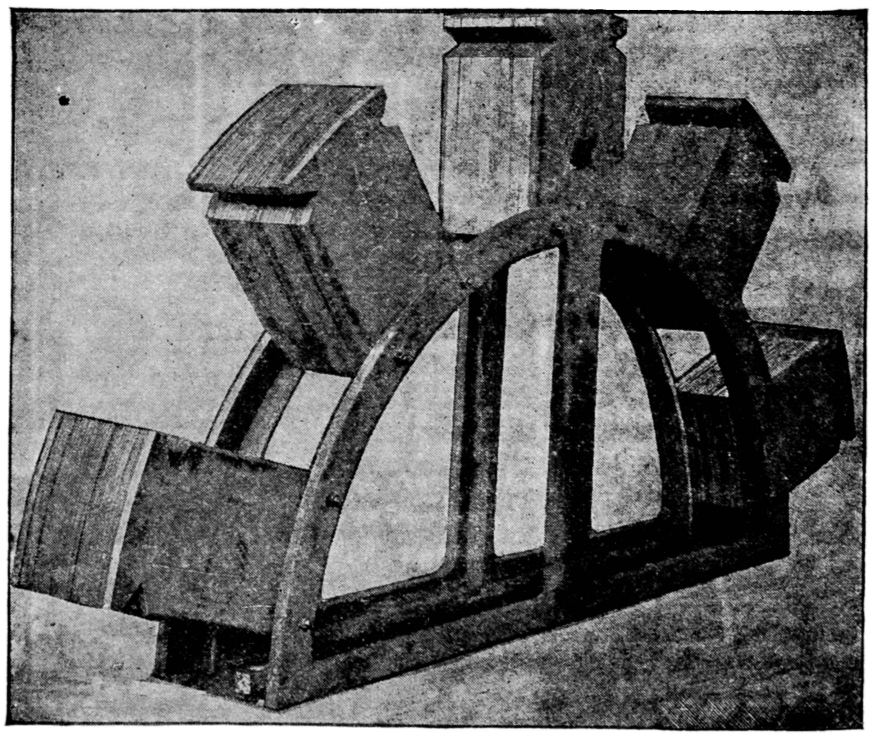

Fig. 3495.

manufactured by the Siemens & Halske Company, which are shown in Figs. 3496 and 3497. The first of these is of the type in which the outer surface of the armature forms the commutator, as described in connection with Figs. 3472, 3473, 3478, and 3479. The second differs from the first only in that the commutator is a separate structure, and in its details of construction is in accordance with the design shown in Fig. 3476.

Machines of the type of Fig. 3496 are generally used for large sizes, the armature being attached directly to the shaft of the engine and thus rotated at a slow velocity. The current generated in the armature is taken off by the brushes resting upon its outer surface, and which are carried upon the rods seen extending over it. These brushes are made so as to be held up to the surface by the tension of springs, so that there may be no danger of their being thrown off by any irregularities in the surface that may be encountered. The bars upon which the brushes are mounted are insulated from each other and from all other parts of the machine, but all the alternate bars are connected, electrically, with each other. This connection of the alternate brush holder bars is necessary, as the only winding possible with this style of armature is that known as the parallel, which we have already described. design Fig. 3496, but in this case the winding of the armature can be either the parallel or the series, as may be desired. In either case, however, if as many brushes as are shown are used, the alternate ones—that is, the alternate sets of brushes—must be connected with each other. The spider which carries all the brush holder rods is arranged so that it may be rotated a certain distance in either direction from the position shown, this being done for the purpose of adjusting the brushes to the best position. The best position for the brushes is that in which the voltage of the current is the highest, and the sparking the lowest. As has been explained in connection with the description of the method employed to make constant current generators self-regulating, the position of the brushes can be such that all the voltage developed in the armature conductors is utilized, or a certain portion can be made

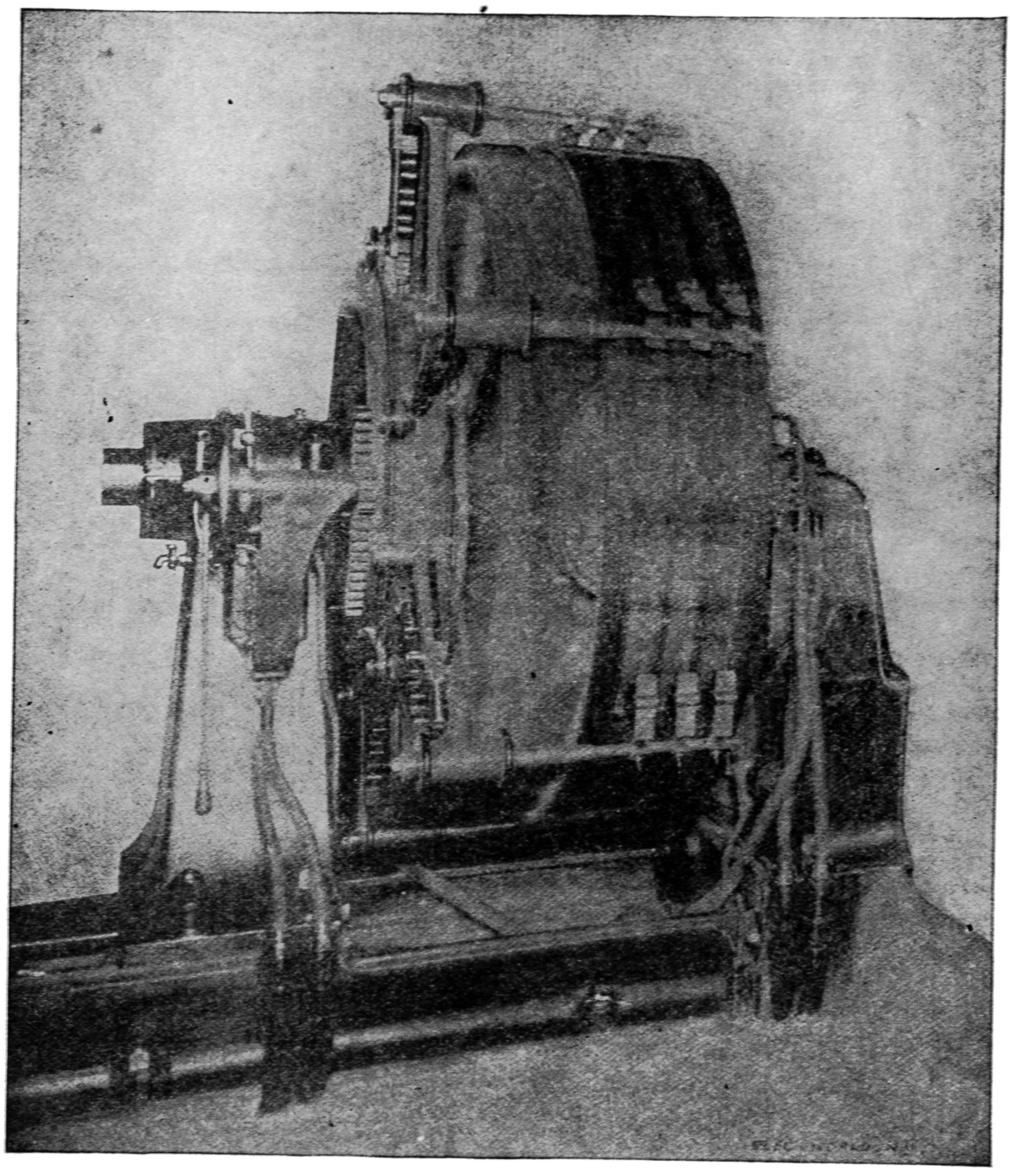

Fig. 3496.

By the aid of the artist, the armature in this illustration has been given a transparant appearance, so that the position of the internal field magnets may be defined. This internal field remains stationary while the external armature revolves. The brushes, as will be understood, are also stationary; therefore, they are at all times in contact with those points upon the armature surface where the currents induced therein come together.

In the generator shown in Fig. 3497, the commutator is located at one side of the armature, and the wires from the latter are carried down between the supporting bolts, as is clearly shown. At the outer edge of the commutator can be seen the heads of the screws which serve to hold the surface portion of the commutator segments in place, as was explained in connection with Fig. 3476. The brushes are held in the same manner as in the to act against the rest, thus reducing the net voltage delivered to the external circuit. From this explanation it can be understood that if, in machines that are designed to give a constant voltage, the brushes are not properly set, the full effect of the armature is not obtained. Under these conditions, not only will the capacity of the generator be reduced, but, in addition, the brushes will spark badly. Generally, the position of the brushes that gives the highest voltage also reduces the sparking to the lowest point, but this is not universally the case. If the machine is properly proportioned, the non-sparking point, as it is called, and the point of highest voltage, will be at the same place; but often it happens that they are separated by a considerable distance. In such cases, the only thing that can be done is to set the brushes so that the sparking will be the smallest for the voltage desired.

If the armature is symmetrical in construction, and the field is not unevenly wound, the brushes will have to be equally spaced all the way around the commutator to reduce the sparking to the lowest point; but if there is lack of regularity in the armature or the field, the spacing of the brushes will have to be uneven. On this account it is sometimes found that better results can be obtained by adjusting each brush individually, after the whole have been brought to the point where they appear to work the best. This condition seldom occurs, and may be said to never happen with well-constructed generators; therefore, the adjustment of the brushes should be made by the movement of the spider to which the whole are connected. In Figs. 3496 and 3497 it will be noticed that there is no way of adjusting each brush individually, except by changing the position of the brush in the holder. In some machines even this form of adjustment is not possible.

Fig. 3498 represents one of the monster machines made by the Walker Company, its capacity being a trifle less than 1,900 horse-power. By way of contrast a smaller generator, about 75 horse-power, with the armature removed, is shown in the foreground. This machine has nearly twice the number of poles of the generators shown in the previous figures, the number being increased, in part, on account of the greater capacity, and in part on account of the reduced velocity of rotation. The brush holders in this machine, as can be seen, are carried by a ring-shaped frame, and the latter is adjusted by means of the screw and hand wheel seen at the lower left-hand corner. In this cut, the insulation of the brushes from the frame is clearly shown by the darker color of the insulating washers under the bolts that pass through the supporting circular frame. At some of the brush holders the darker insulating washers can be seen on the inner side of the ring, and it may be well to add that in the holes in the frame through which the brush holder studs pass there is an insulating bushing, so that there is no metallic contact at any point between the frame and the holders.

Fig. 3499 illustrates another Walker generator, which differs from Fig. 3498 in the proportion of the parts, and also in the shape of the shaft bearings. This latter change is due to the fact that the machine first described is designed to rest upon a foundation support built in connection with the driving engine, while the latter machine is provided with an independent bed of its own, and, therefore, is adapted to be connected directly to an engine or to be driven by a belt running over a pulley mounted upon a prolongation of the shaft at the rear end.

Fig. 3500 shows a small size Walker generator so designed that it can be mounted upon a prolongation of an engine bed, and thus become a direct-connected machine, or it can be placed upon a suitable independent bed and be adapted to be driven by a belt. In this illustration, the manner in which the brush holder frame is adjusted by the screw at the left-hand side is very clearly shown, and, in addition, the connection of the alternate brush holders with each other can also be seen. These connections are made by means of the cables shown running around the circle just outside of the brush holder frame, and, as can be readily seen, each cable attaches to alternate brush holders.

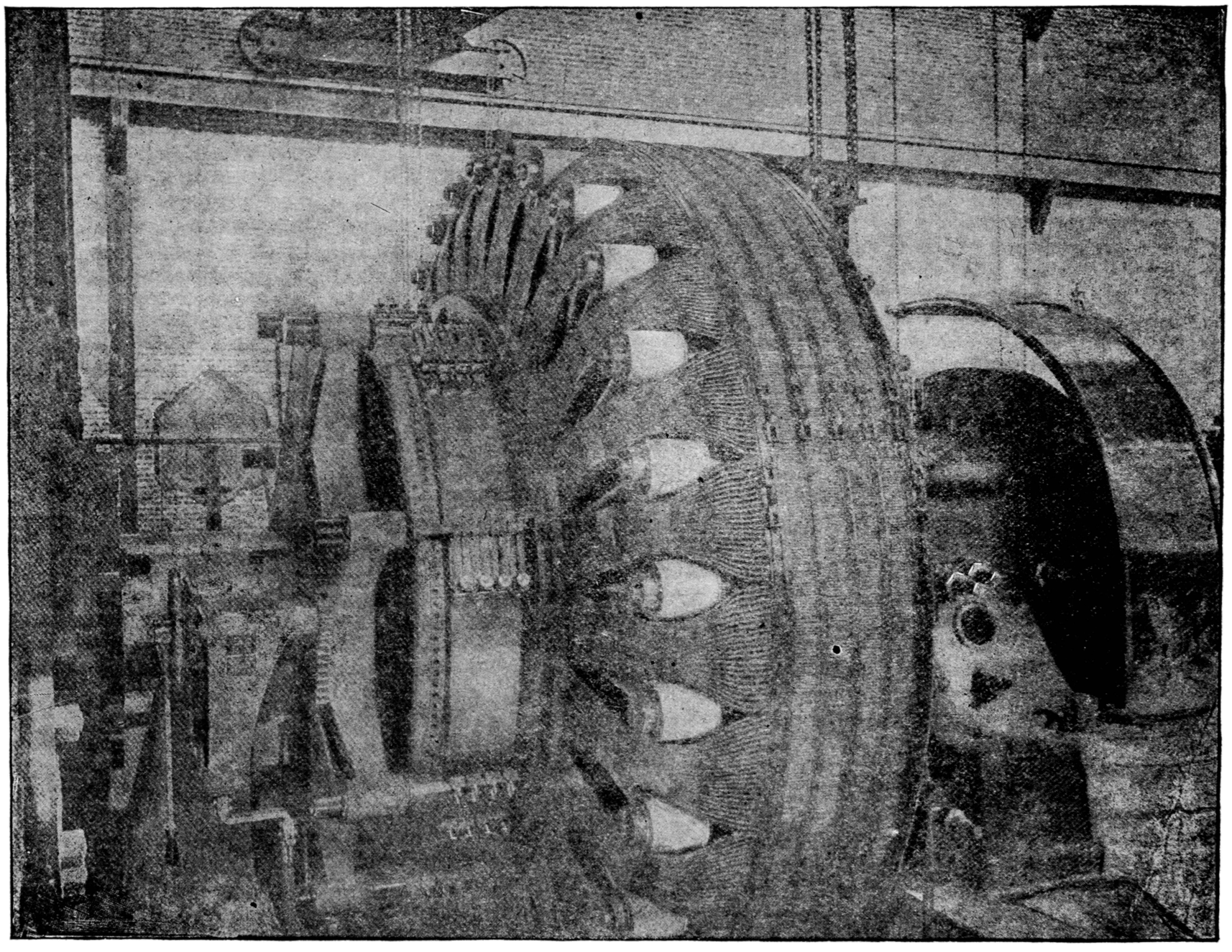

Fig. 3497.

Fig. 3498 is a fourteen-pole generator, Fig. 3499 is a ten-pole, and Fig. 3500 is a six-pole. As a rule the larger the machine the greater the number of poles; this being made so as to increase the capacity more than the size. As the capacity is increased, the velocity of rotation has to be reduced, because these large machines are almost always driven direct from the engine shaft; that is, they are mechanically coupled to it, and, therefore, have to rotate

at the same velocity. Now this reduction in speed reduces the capacity of the generator, and to make up for it the number of poles is increased.

Fig. 3501 is a small size generator of the style manufactured by the Bullock Electric Company. As will be noticed, the design embodies the same general principles as are seen in the larger generators, the difference being wholly in the details of construction. This machine is of the four-pole type. It will be noticed that the face of the commutator is wider in proportion to its size than that of the other machines so far described. This difference is due to the fact that it is intended for a lower voltage, and, therefore, a stronger current. Thus it will be noticed that extra brush surface is required for greater current carrying capacity, but not for increased voltage or electromotive force.

The statement in the last paragraph as to the greater brush capacity required to convey strong currents is well illustrated in Figs. 3502 and 3503, which represent a Westinghouse generator of about 500 horse-power used for copper-refining purposes, and which delivers a very strong current at a very low voltage. Fig. 3502 shows the entire machine, while Fig. 3503 is the armature by itself. As will be noticed, there are two commutators, one at each end of the armature, and these are both of unusually wide face. From each commutator one-half the current can be taken, so that the combined capacity of the two is the same as that of one commutator of double the width of face. The double commutator arrangement, however, has the advantage that two independent currents can be taken off. Each set of brushes is provided with independent means for adjustment, as can be understood from the fact that there are two adjusting screws, the hand wheels of which are clearly shown.

Fig. 3504 represents a small Sturtevant generator of the four-pole type, and Fig. 3505 a small Crocker-Wheeler generator of the six-pole type. The similarity between Figs. 3504 and 3501 will be noted, and it will be found that small machines of the various makes do not differ very much in appearance; even Fig. 3505, which has six poles, does not depart widely from the general design. In fact, there is no occasion for any great departure, for, as has already been stated, the shape has very little to do with the effectiveness of the machine. In Fig. 3505 the winding of the armature is very well shown, and from it a clear idea can be obtained of the manner in which the coils are placed when the ends are turned down toward the shaft, instead of running parallel with it, as in Fig. 3471.

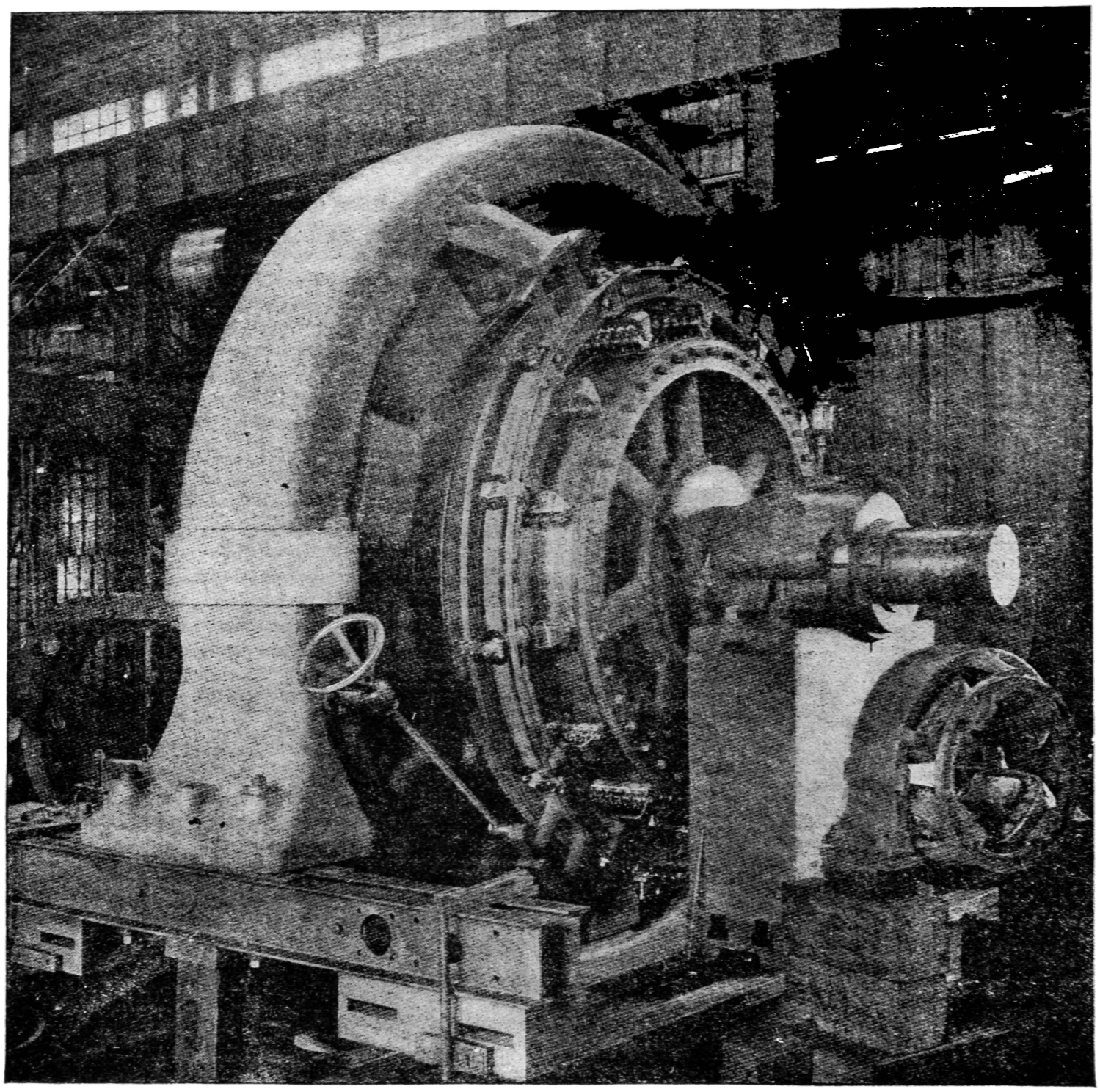

Fig. 3498.

Figs. 3506 and 3507 show another Westinghouse generator of large capacity, and, as will be seen, it has fourteen sets of brushes, which means that it is a fourteen-pole machine. The manner in which these brush holders are attached to the supporting ring is somewhat different from the designs so far shown, and so is the arrangement for adjusting the ring. As will be noticed, the hand wheel is mounted upon the top of a shaft that engages with the

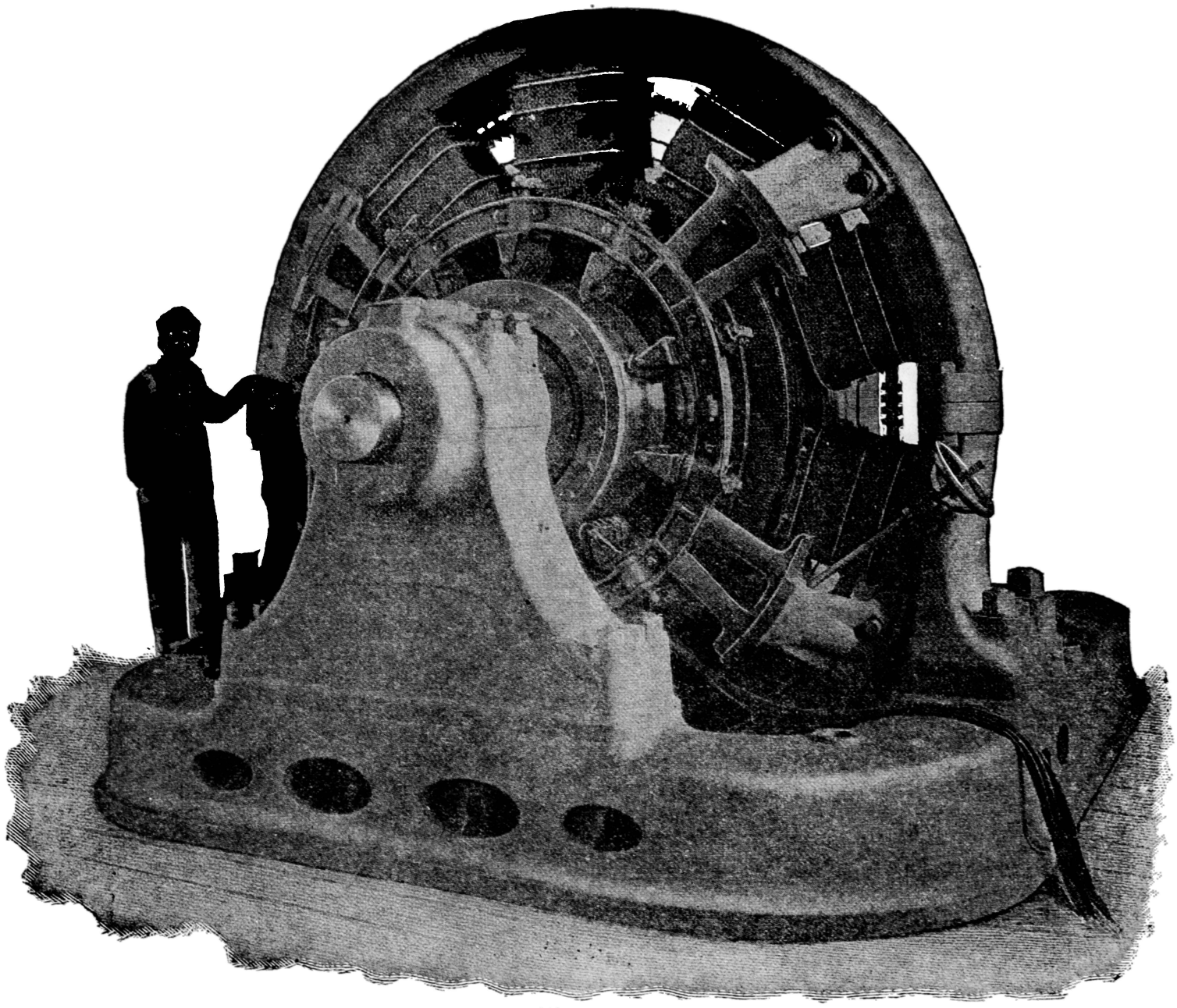

Fig. 3499.

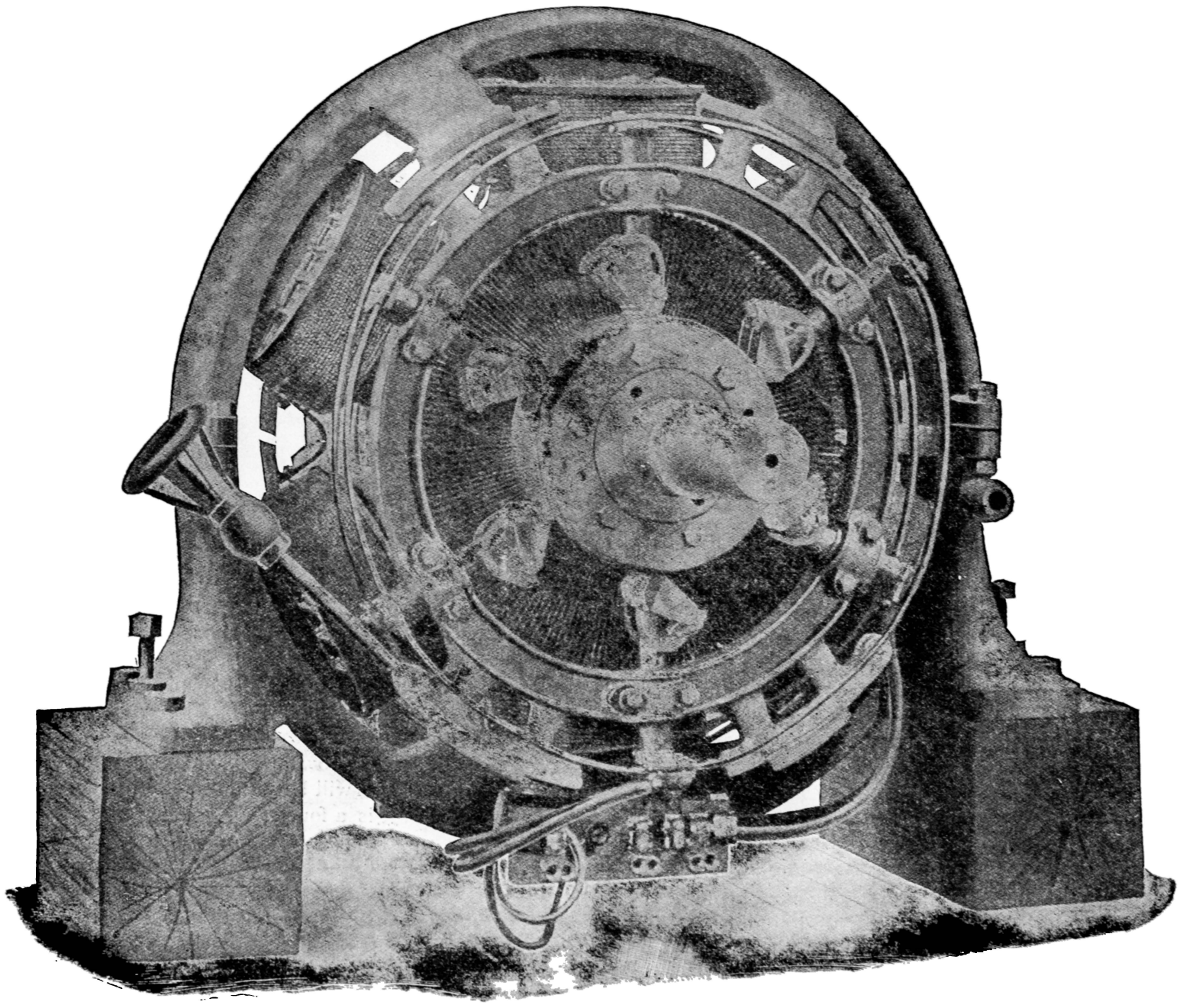

Fig. 3500.

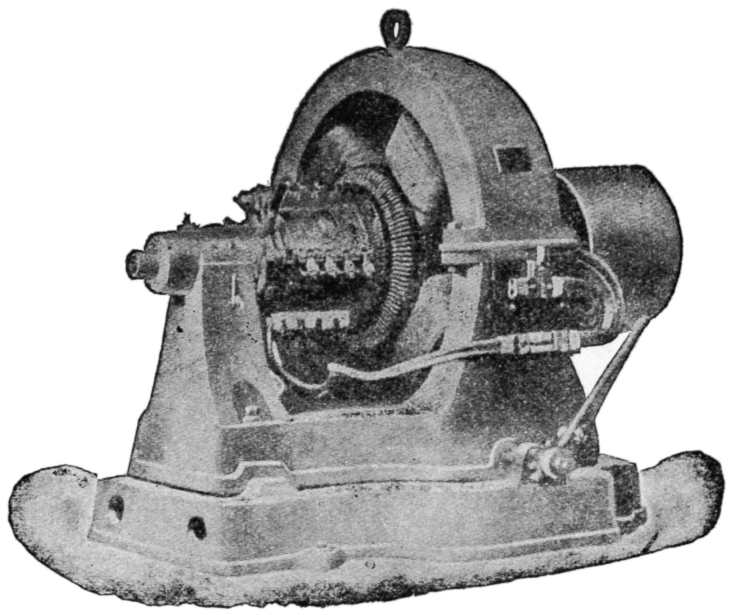

Fig. 3501.

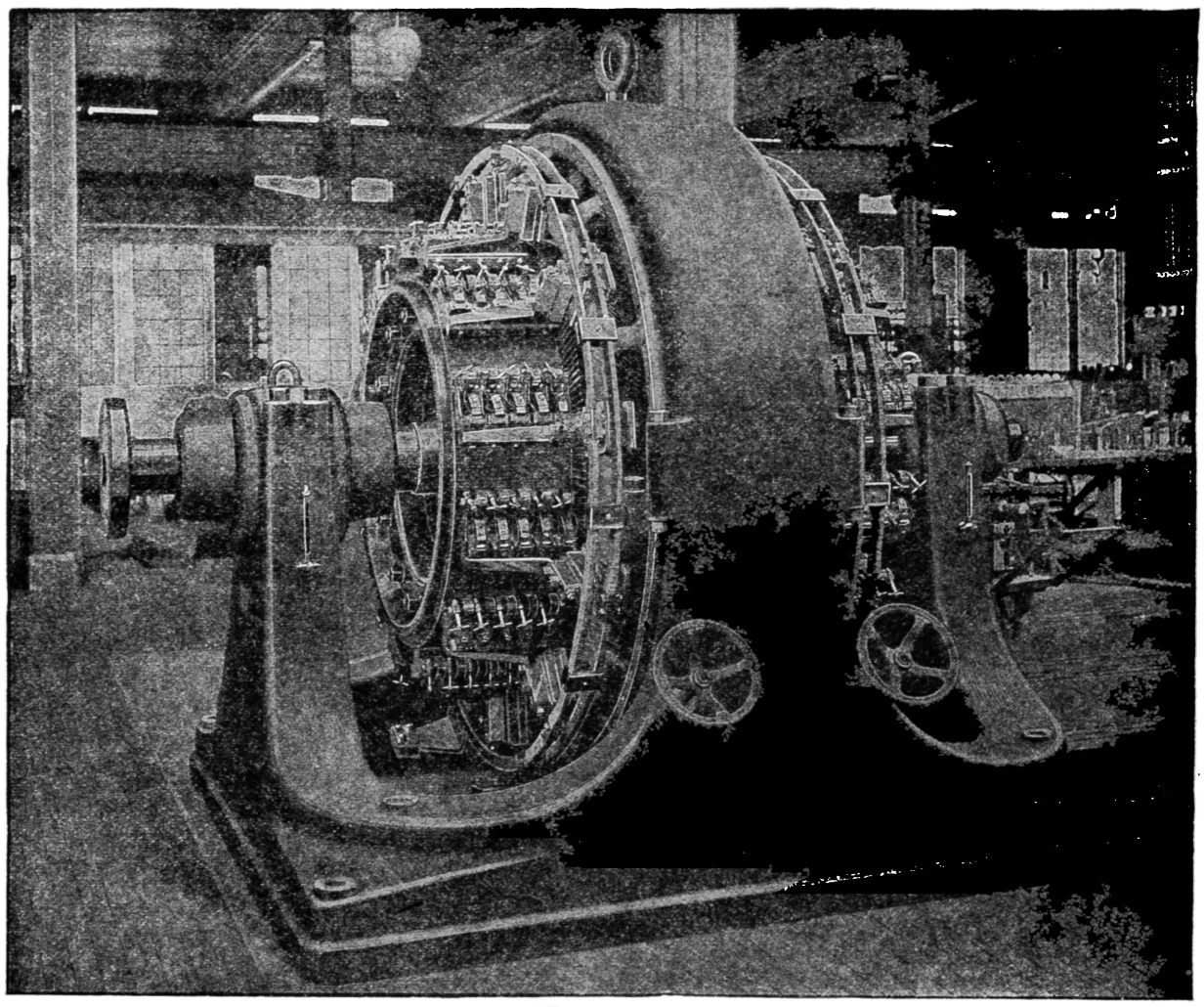

Fig. 3502.

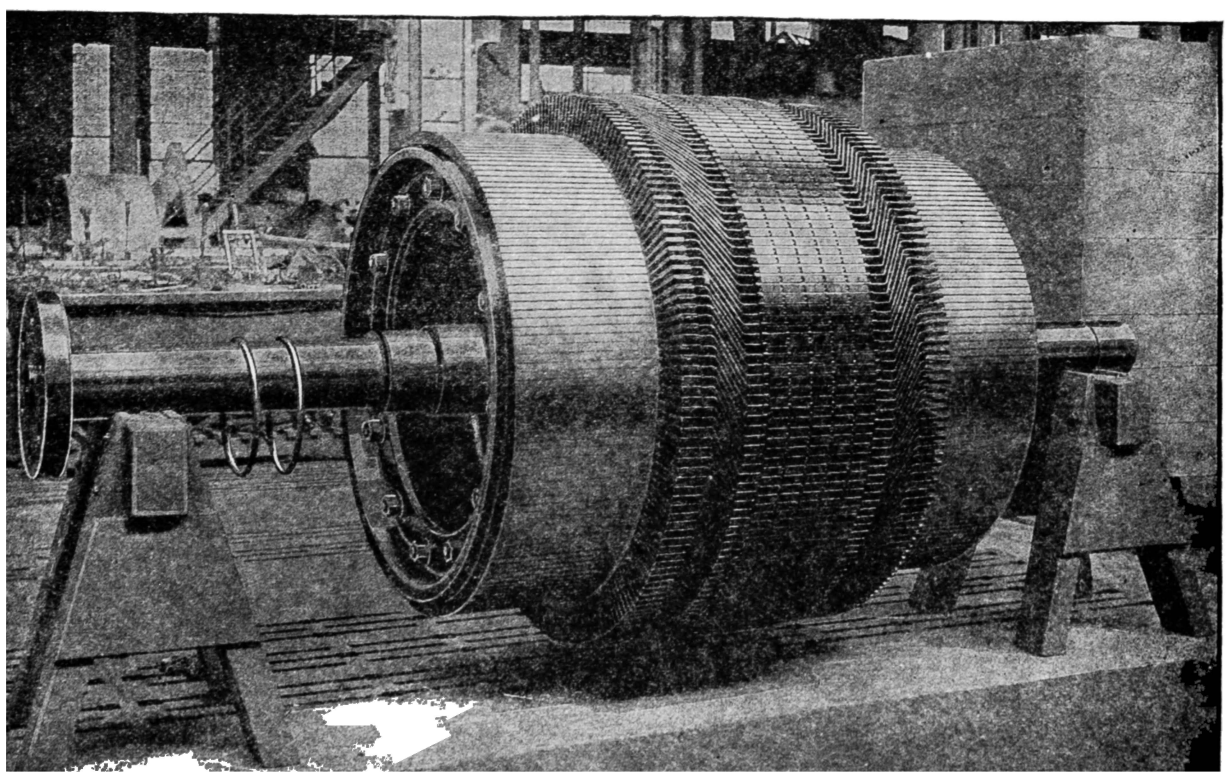

horizontal screw by means of bevel gears. This design of generator is used for direct connection to the shaft of the driving engine.

Fig. 3508 shows a medium size generator intended to be driven by means of a belt. It is one of the numerous designs manufactured by the General Electric Company. The brush holders are mounted upon a spider that is supported upon the shaft bearing, and the rotating motion required for adjustment of the brushes to the non-sparking point is given by means of the handle shown at the top of the commutator. This type of adjusting arrangement is commonly used for small machines, in which the force required to move the brush frame is not more than a man can conveniently exert. When this method of adjustment is used, it is necessary to provide some kind of locking device, so that when the brushes are set in the proper position, the supporting frame may be clamped.

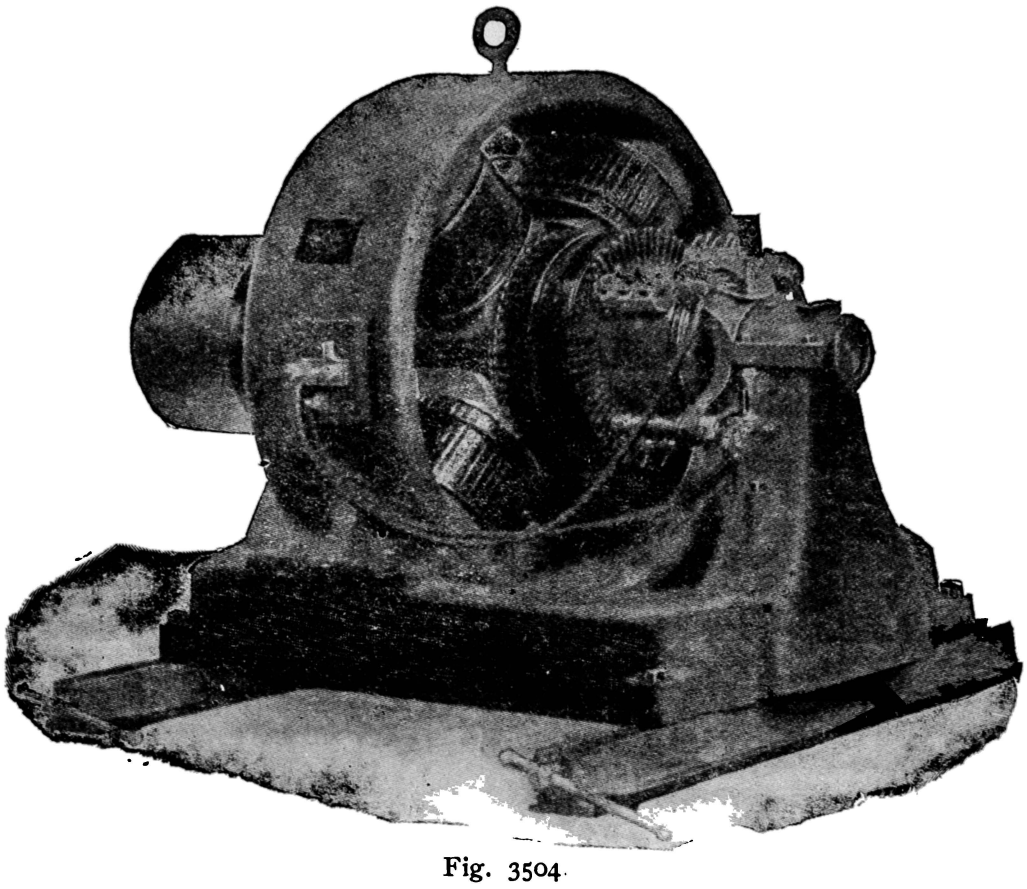

Fig. 3504.

Fig. 3509 is a Westinghouse generator of a design slightly different from that shown in Figs. 3506 and 3507, and from the illustration the manner in which such machines are mounted upon the engine shaft can be well understood.

Large size generators, when direct connected to engine shafts,

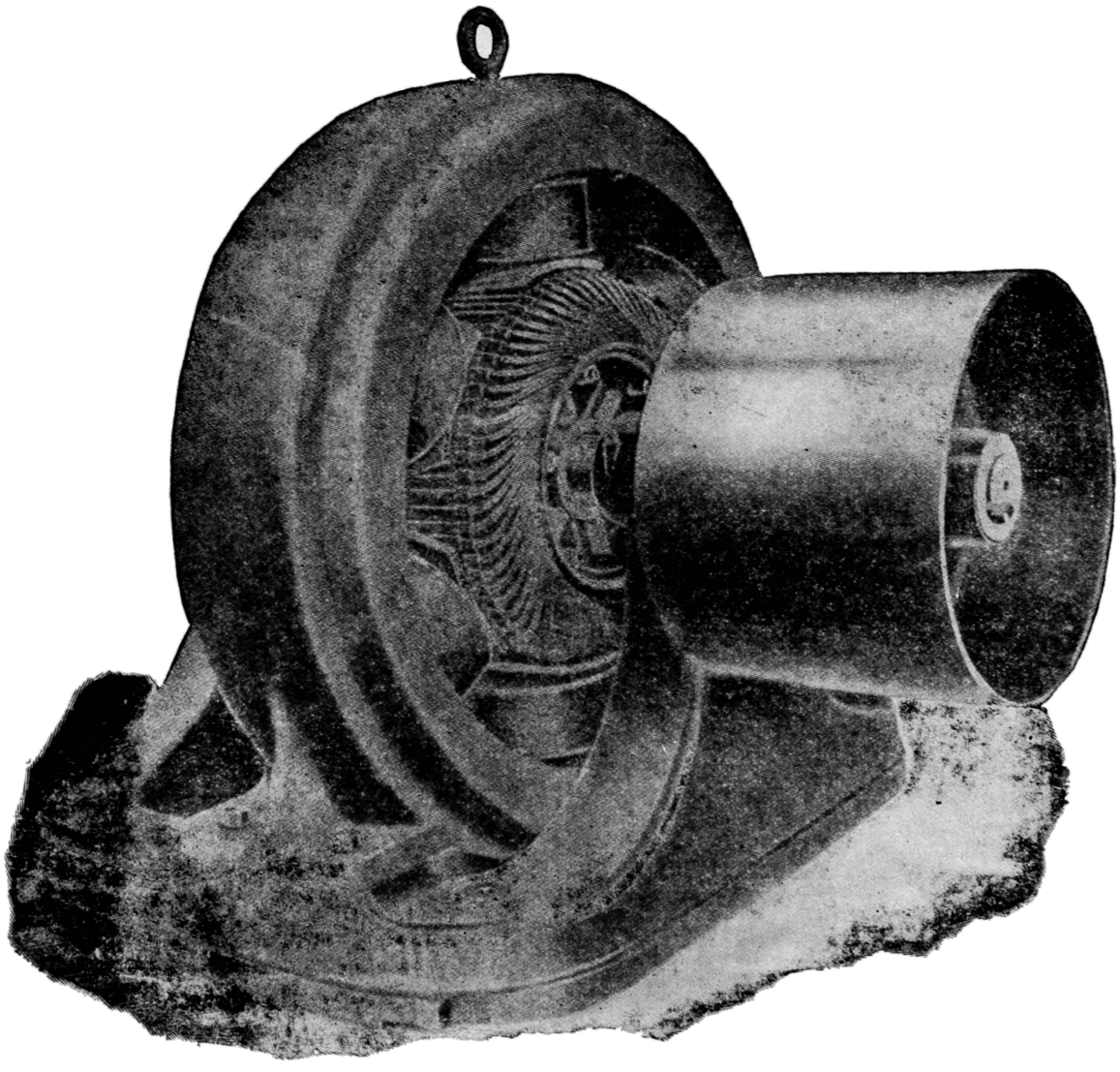

Fig. 3505.

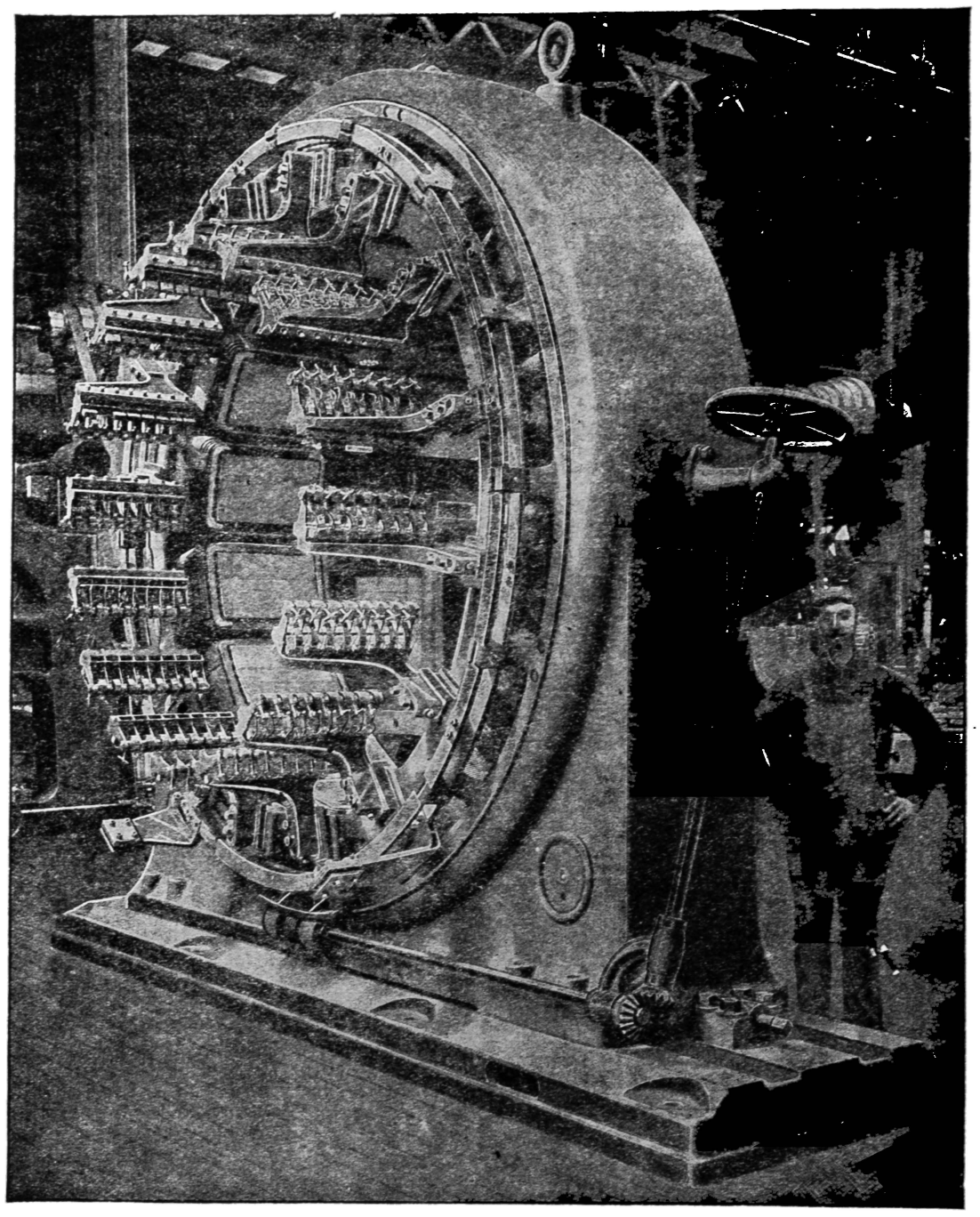

Fig. 3506.

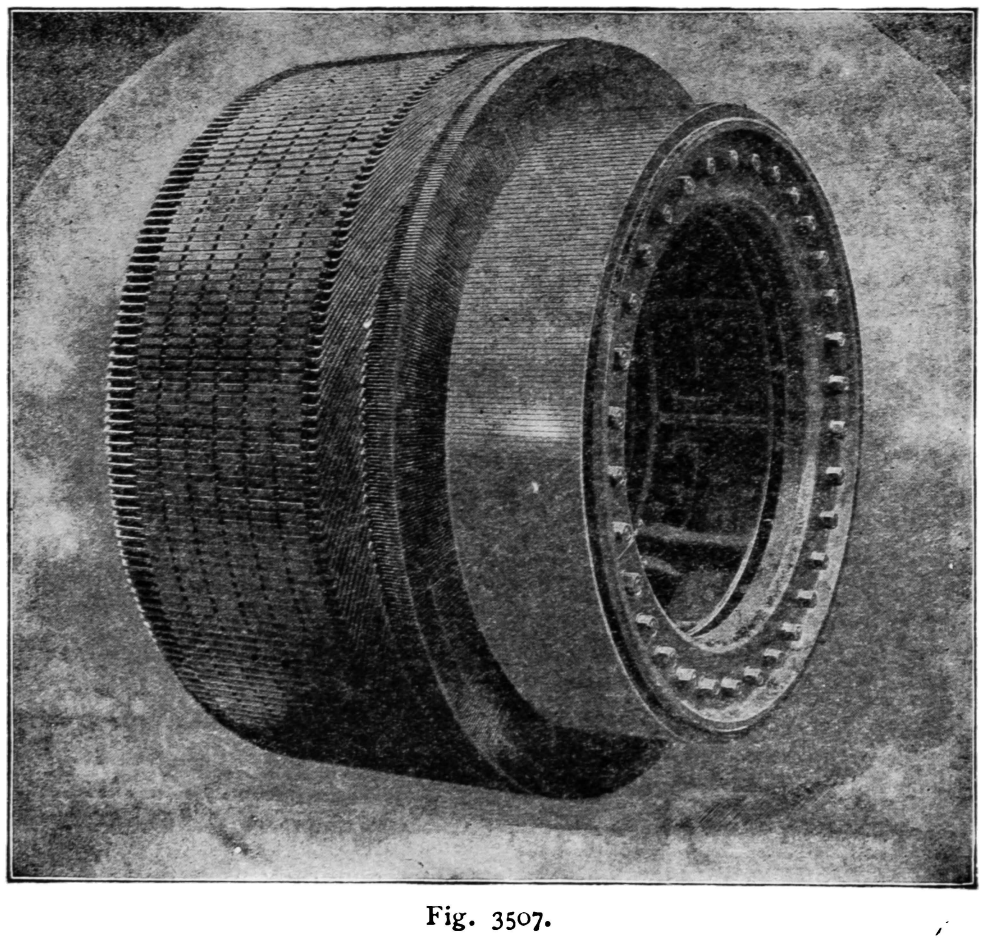

Fig. 3507.

are made so as to run at as slow a velocity as the engine may require, and as the latter, being anywhere from 500 to 2,000 horse-power, cannot very well be driven at speeds higher than from 150 down to about 75 or 80 revolutions per minute, the generators must necessarily be unusually large for their capacity. With very large machines, a considerable difference in size does not materially increase the cost of construction, but as the capacity is reduced, the difference in size begins to tell. On this account it is the almost universal custom to connect small generators to some type of high-speed engine, so that the armature may rotate at a velocity anywhere from about 200 up to 300; the lower speed being obtained in machines requiring about 300 horse-power, and the higher in those of 50 to 100 horse-power. In Figs. 3510 to 3513 are shown different designs of high-speed direct-connected generators. In the first three the engines are of the horizontal type, and in the last one, of the vertical type. The latter construction is most generally used on board ships. The hand lever arrangement for shifting the brush holder frame is well shown in Fig. 3512.

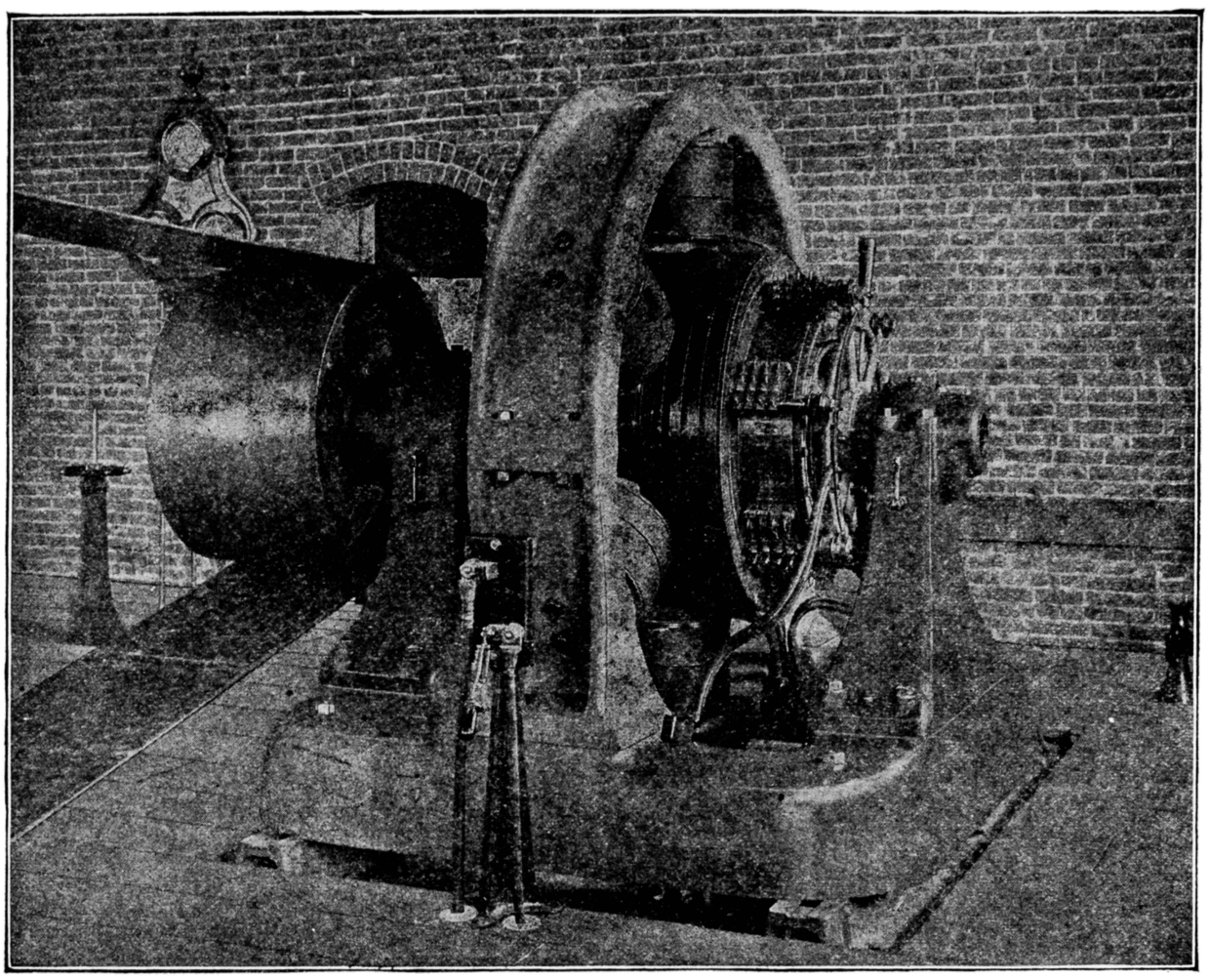

Fig. 3508.

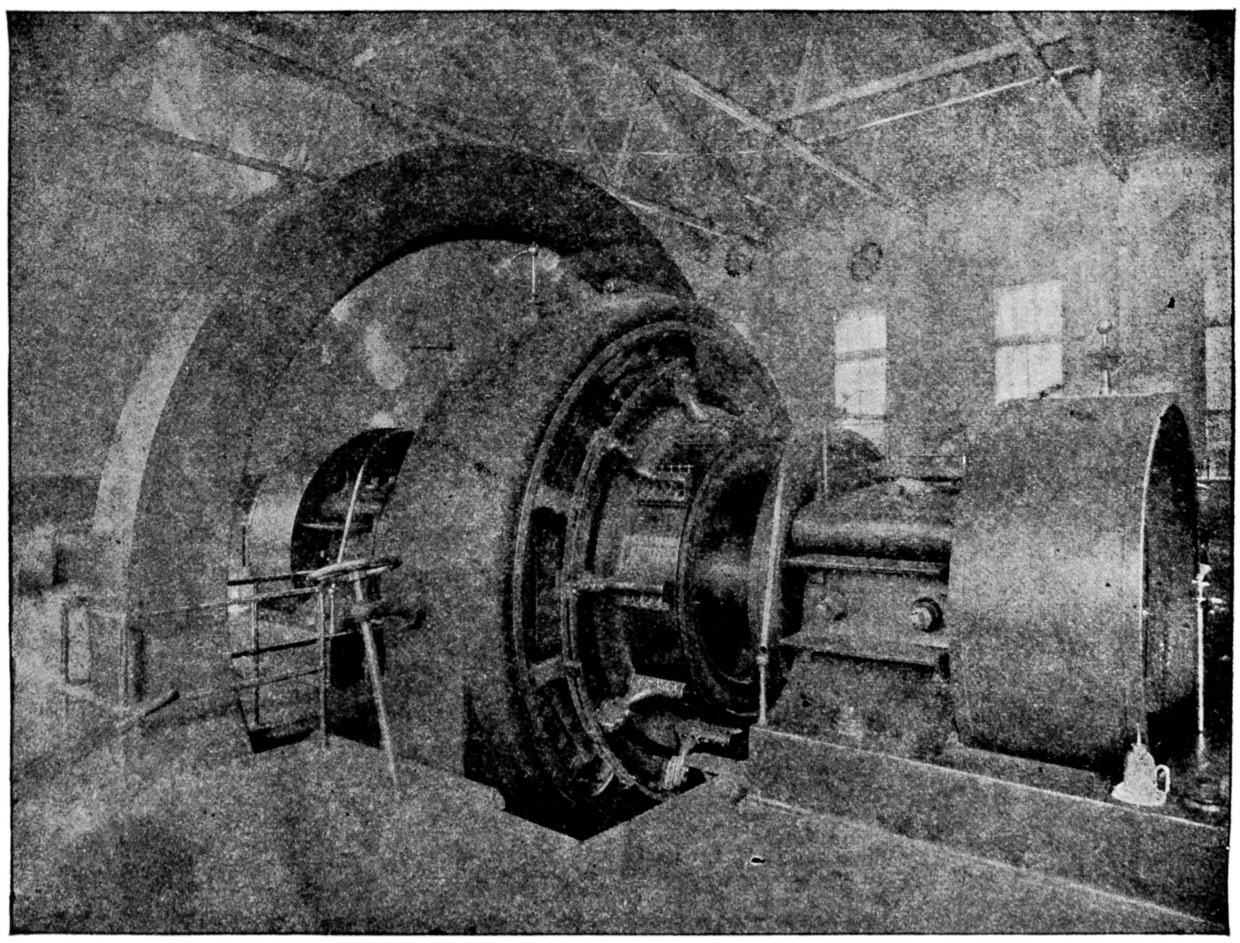

Fig. 3509.

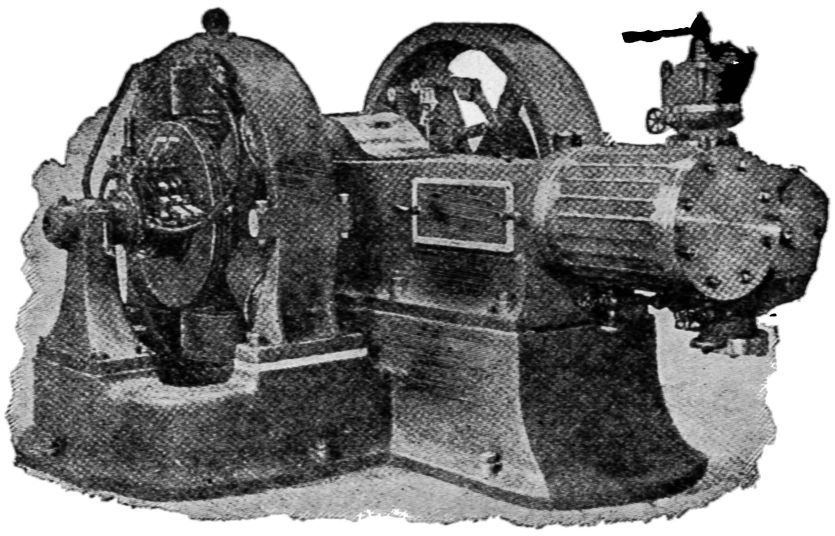

Fig. 3510.

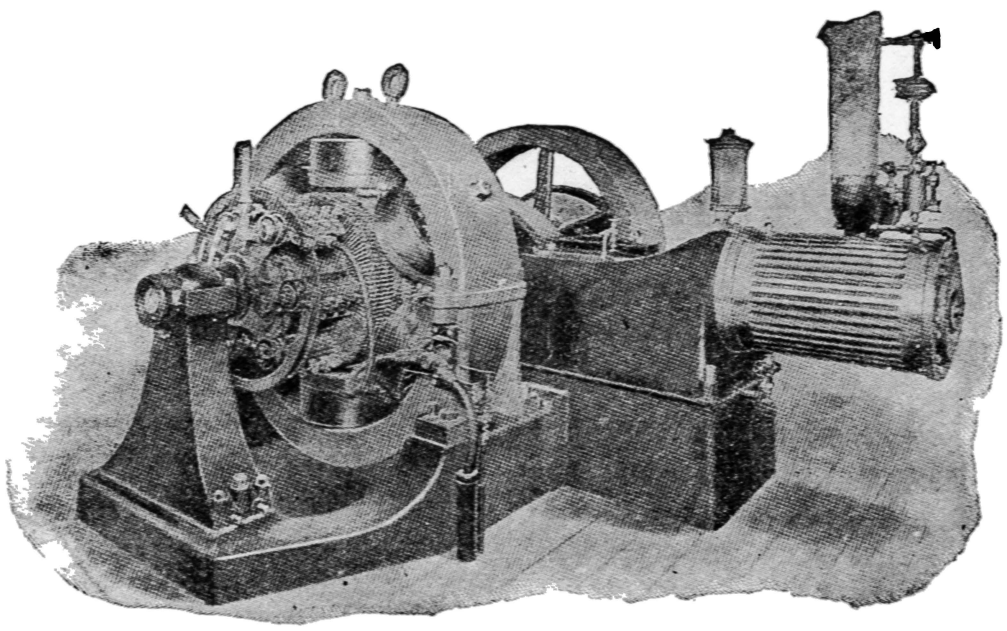

Fig. 3511.

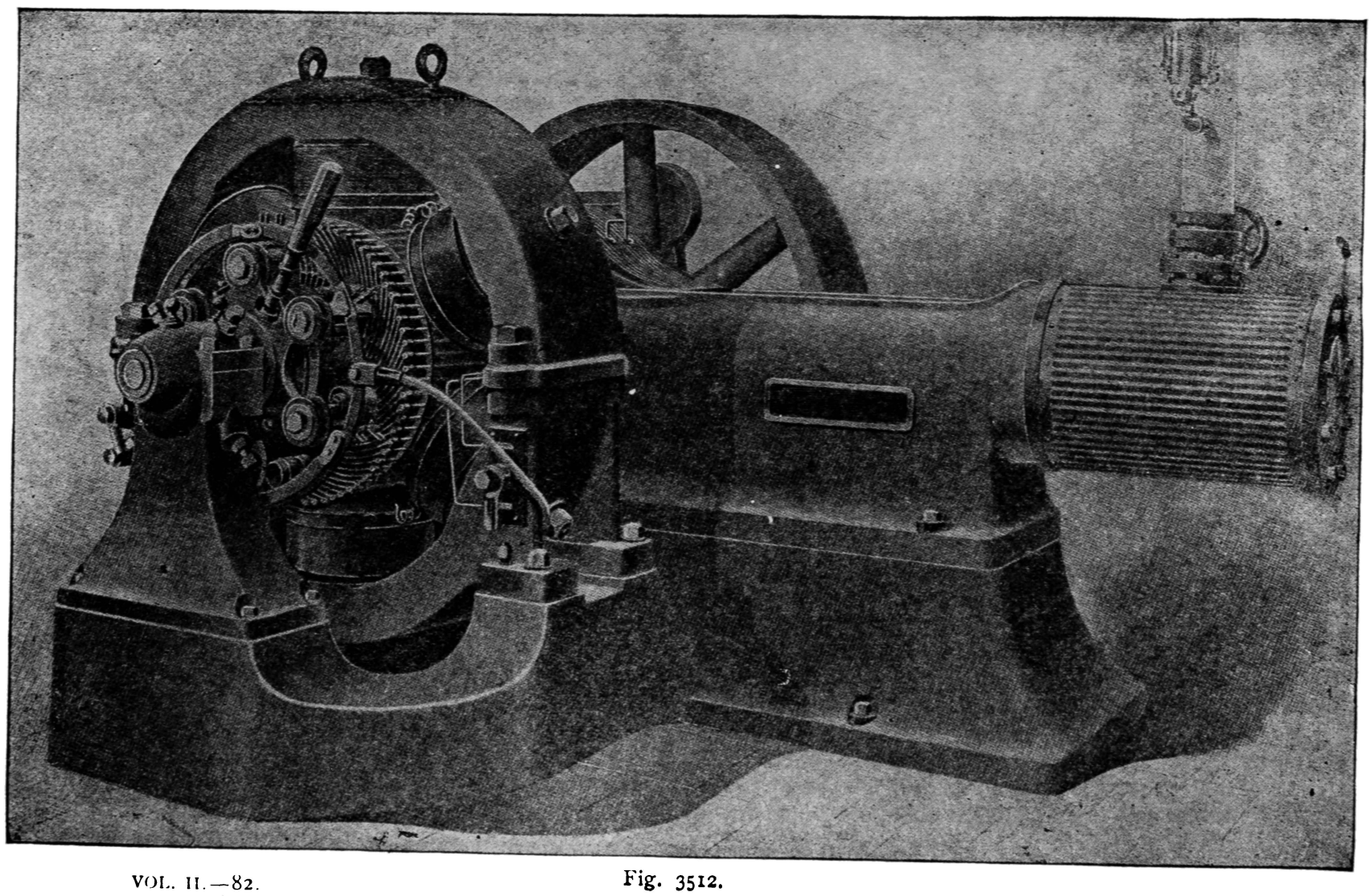

Fig. 3512.

In Fig. 3514 is shown a Crocker-Wheeler generator connected directly to a horizontal engine of large capacity, the engine bed being made so as to accommodate the generator, and thus serve to maintain the alignment between them. In this generator it will be noticed that the commutator surface is very wide and that the brush holder ring frame is massive. This construction for the supporting frame of the brushes is very desirable, because there is a considerable amount of friction upon all the brushes combined, although that on each particular one may be scarcely noticeable. The effect of this frictional resistance, if the supporting frame is weak, is to set it vibrating, and thus cause the brushes to chatter upon the commutator surface, and in that way increase the sparking. The more rigid the support of the brush holder frame, the less the sparking, other things being equal.

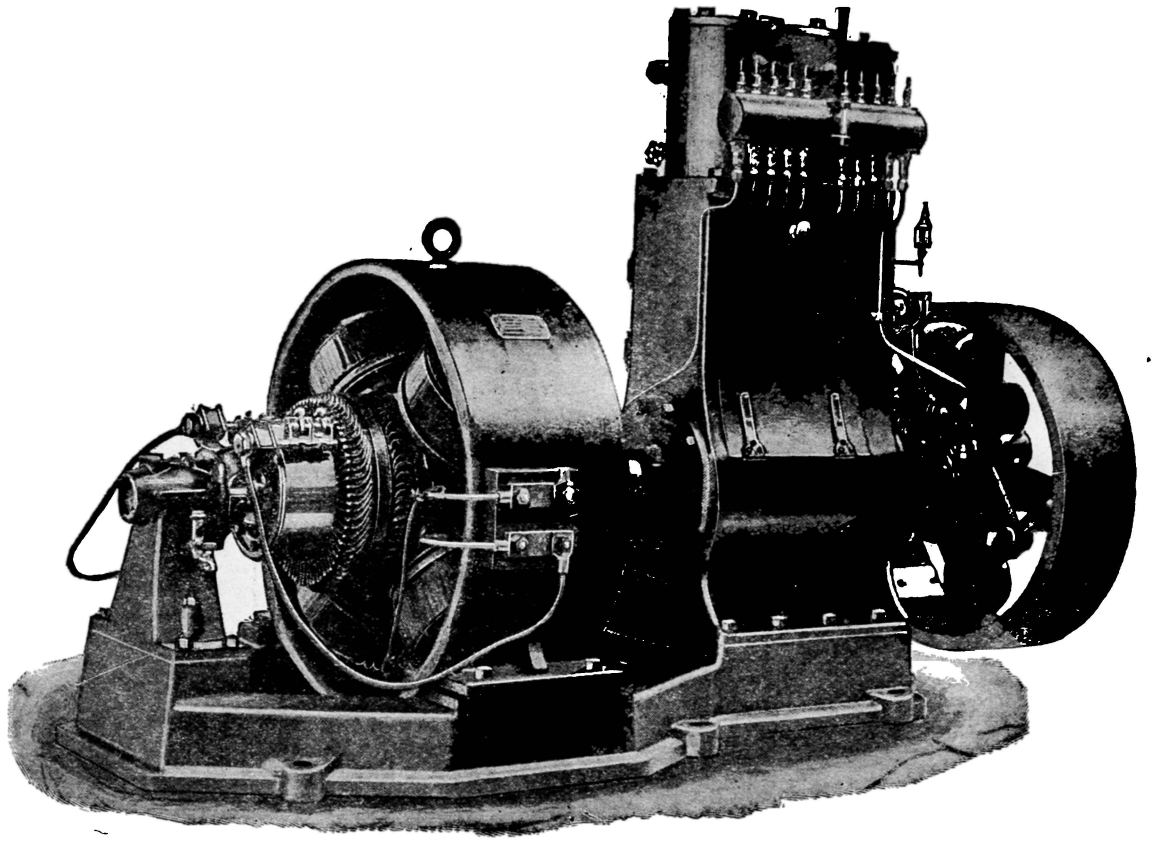

Fig. 3513.

Fig. 3515 shows a large General Electric Company double generator arrangement, consisting of two generators direct connected with a vertical engine. This construction is quite common for generators of large capacity, and is well adapted to engines of the vertical type, in which it is just as easy to place a generator at one end as at the other.

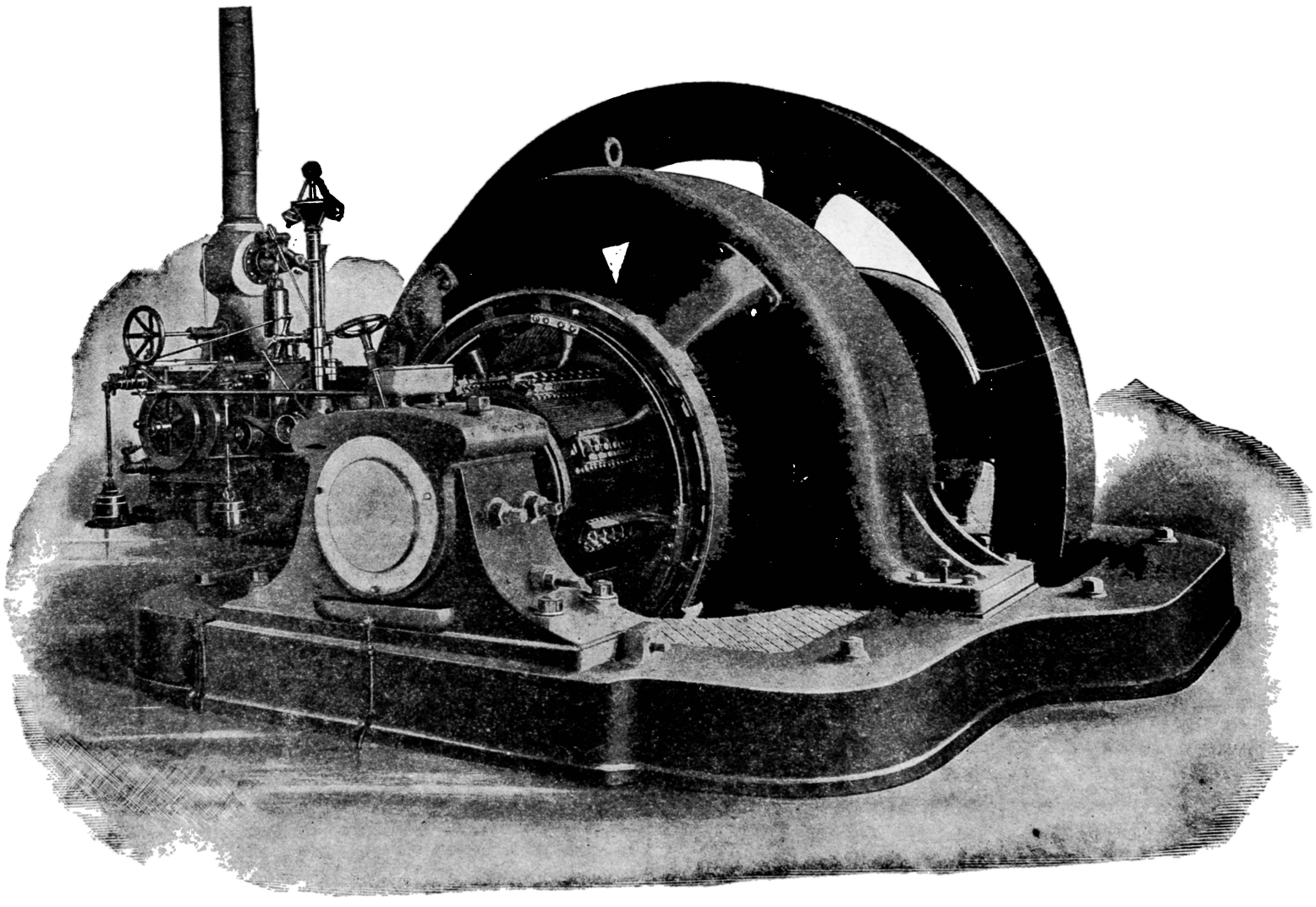

Fig. 3514.

Fig. 3516 shows another design of generator direct connected with a large horizontal engine. This machine is also manufactured

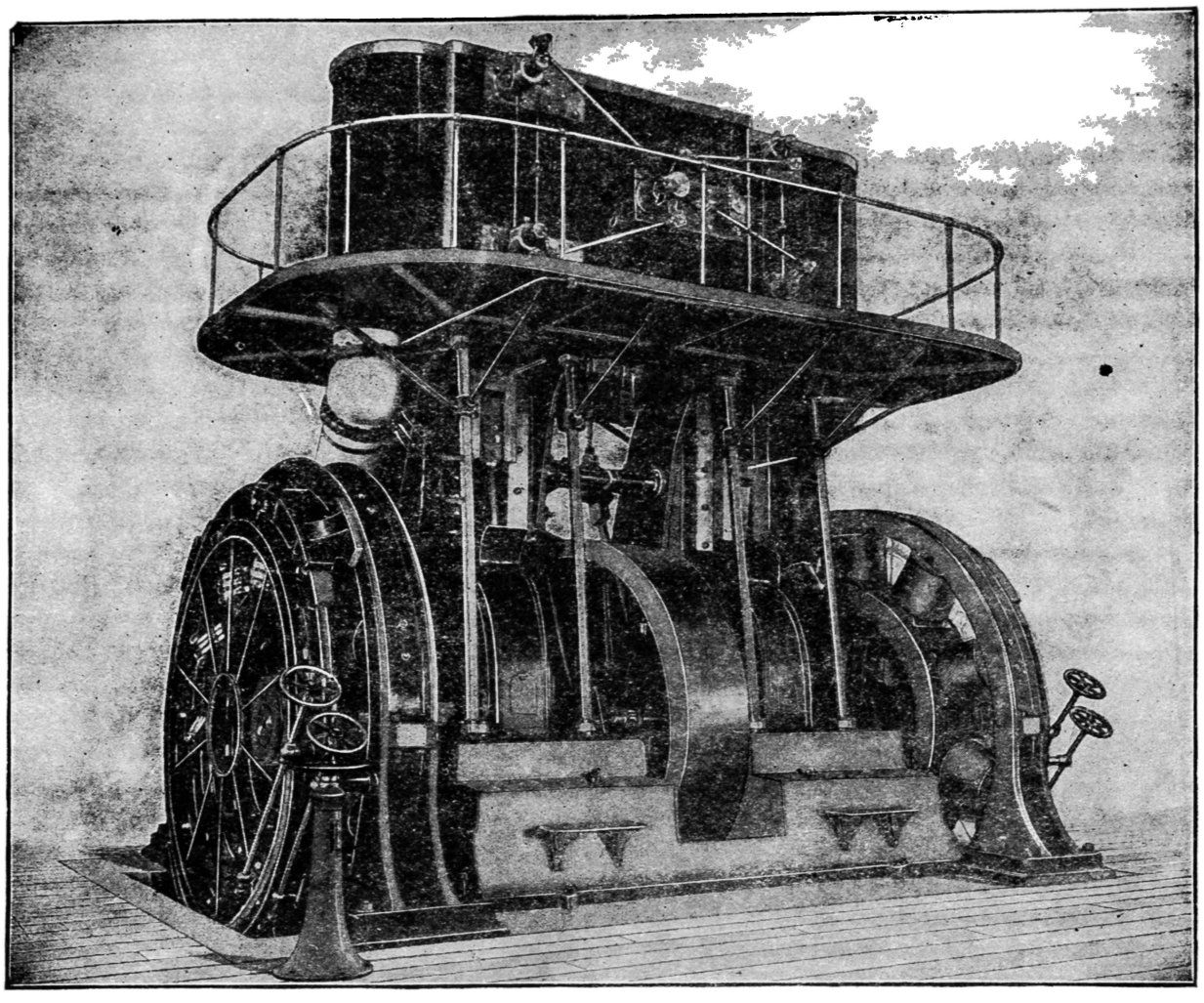

Fig. 3515.

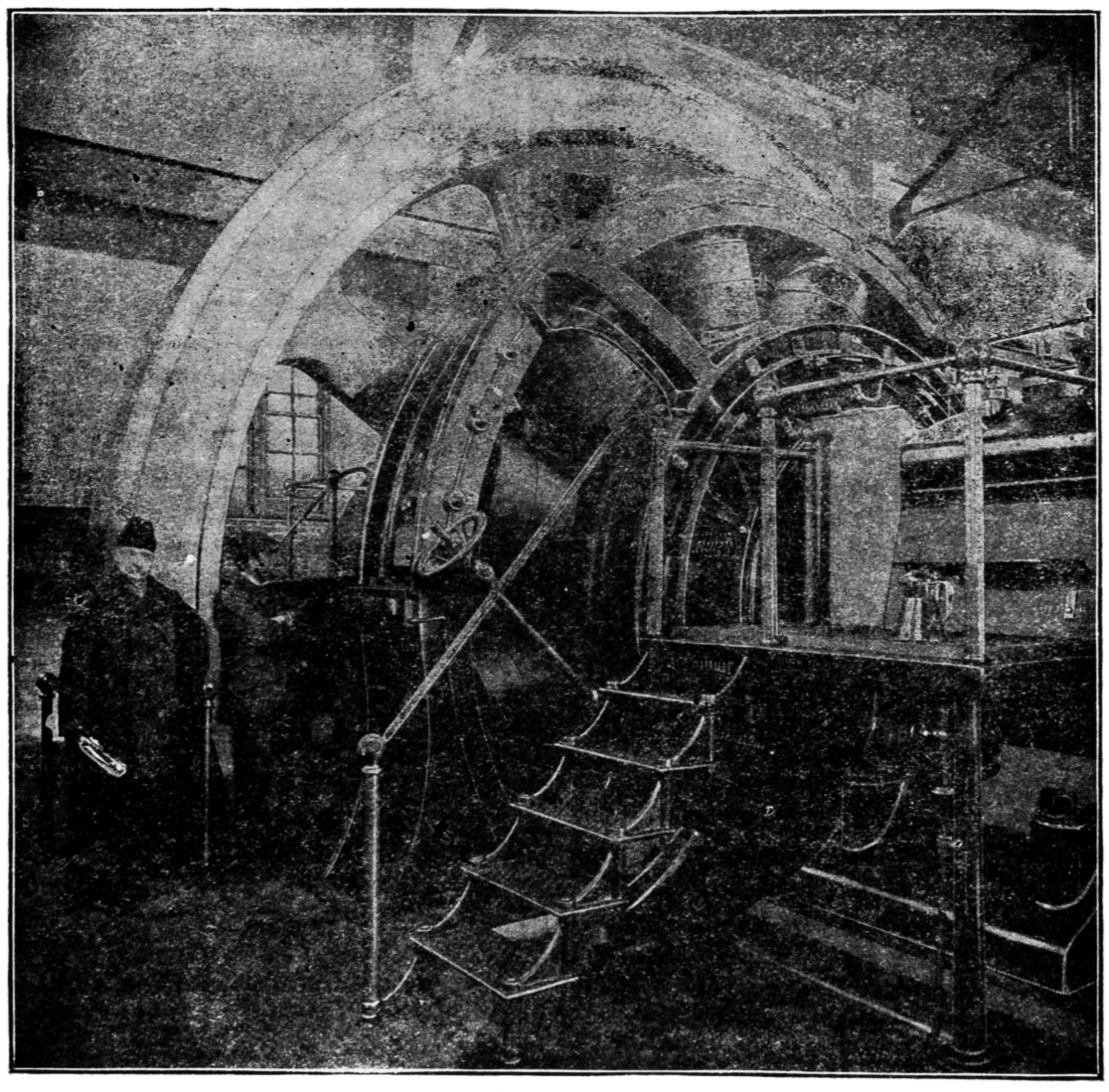

Fig. 3516.

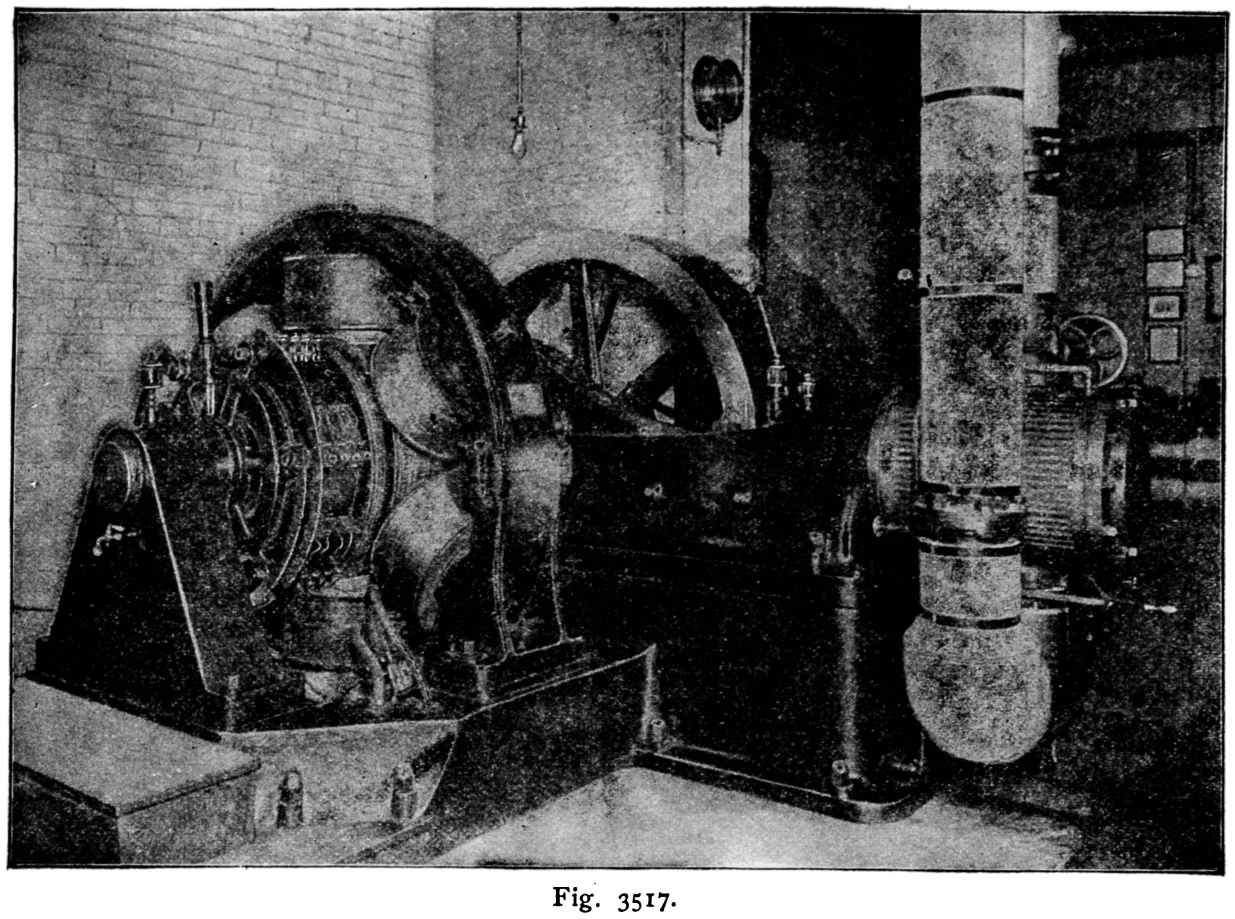

Fig. 3517.

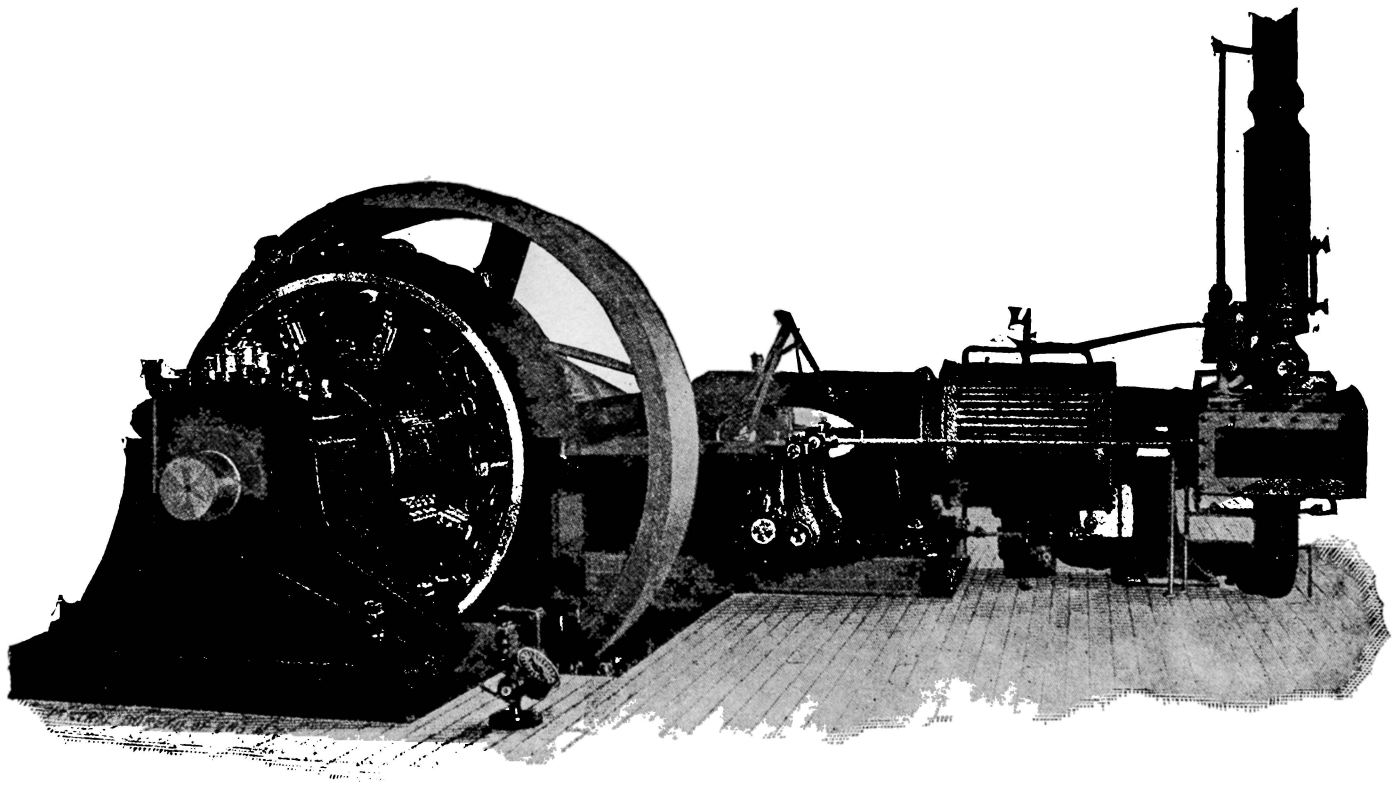

Fig. 3518.

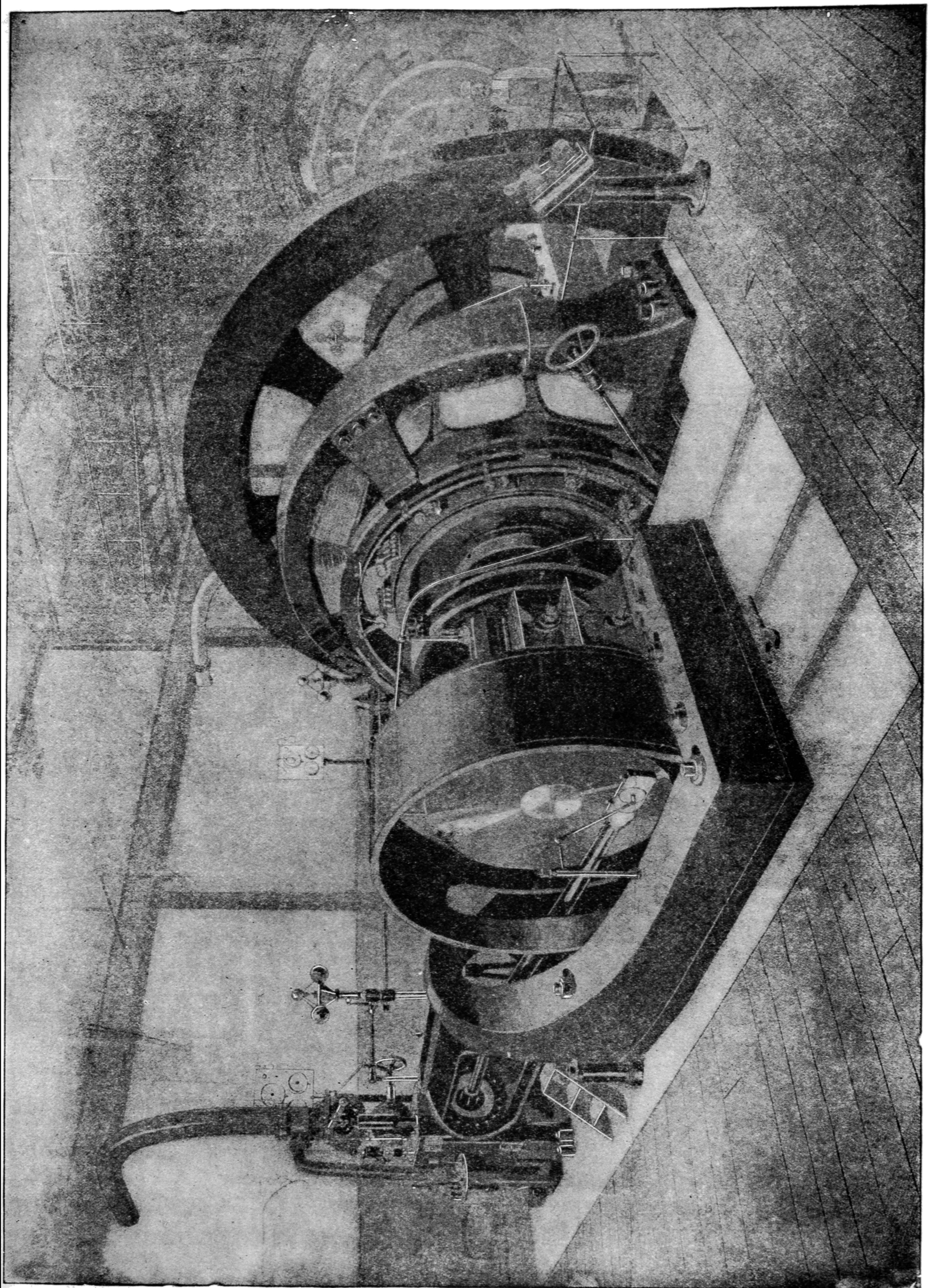

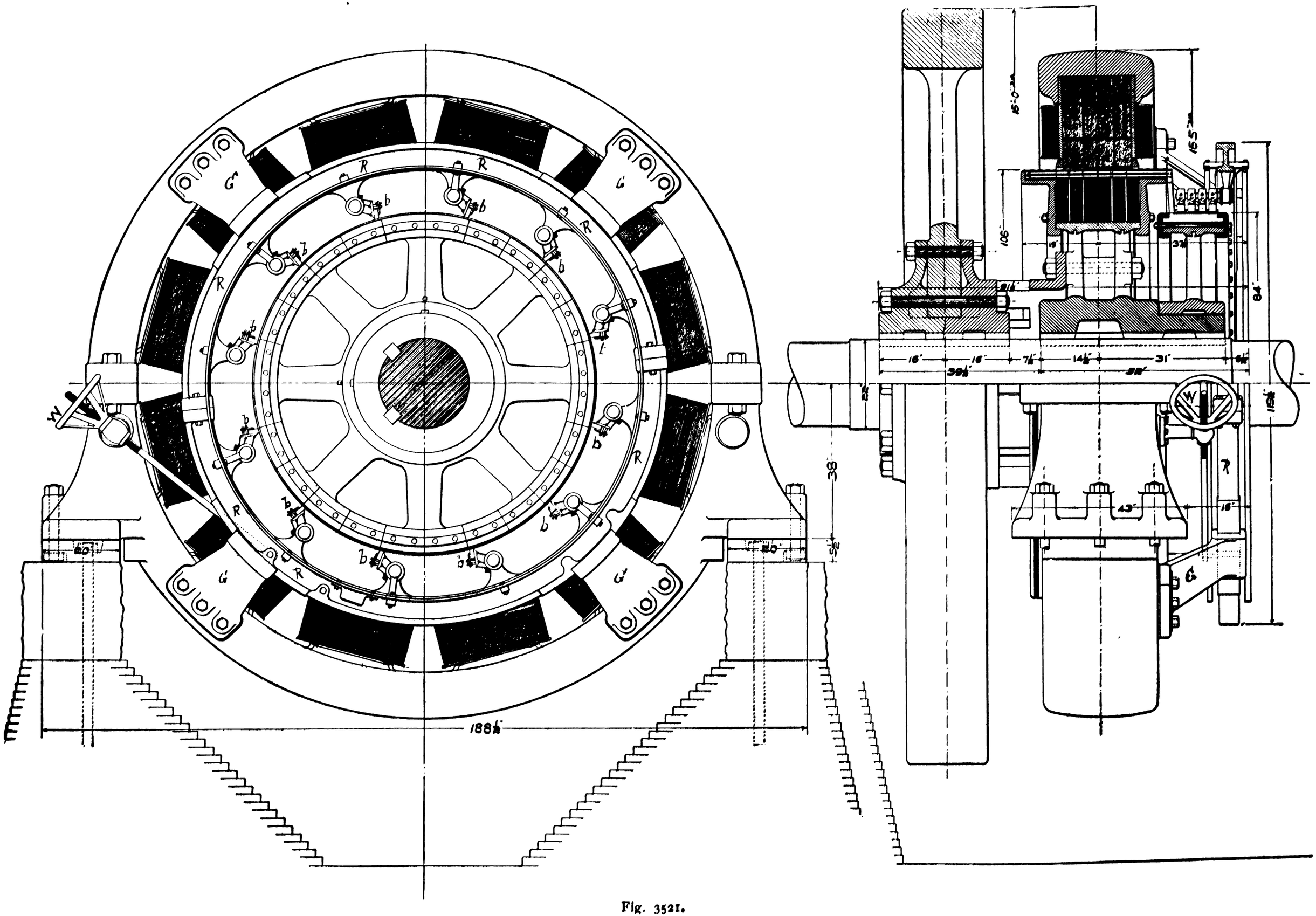
G
R
b
t
W
38
5½
188½
15'-0"
16½
10½
21½
16
16
7½
14½
31
6½
39½
38
22
15½
8½
37½
45
16
6

Fig. 3521.

by the General Electric Company. It is the design most generally used for railway work.

In Fig. 3517 is shown a type of direct-connected generator, made by the same company for use in the numerous lighting plants installed in private buildings. In these cases it is, as a rule, desirable to condense the machinery down to the smallest form, and for this reason the high-speed engine is used. In this case, as in Fig. 3514, the generator is mounted upon the base of the engine, thus holding both parts of the combination always in line.

Sweet straight line engine. In this arrangement the connection between the engine and generator is different from that ordinarily used. A safety coupling is provided, which drives the generator by friction, the force being sufficient to run the machine up to full load, but not enough to carry it in the event of a short circuit being formed ; hence, in such an event, the generator armature will not be burned out. Another advantage is that either the engine or the generator can be dismantled without disturbing the other.

Fig. 3520 shows a Walker generator of 1,000 horse-power direct

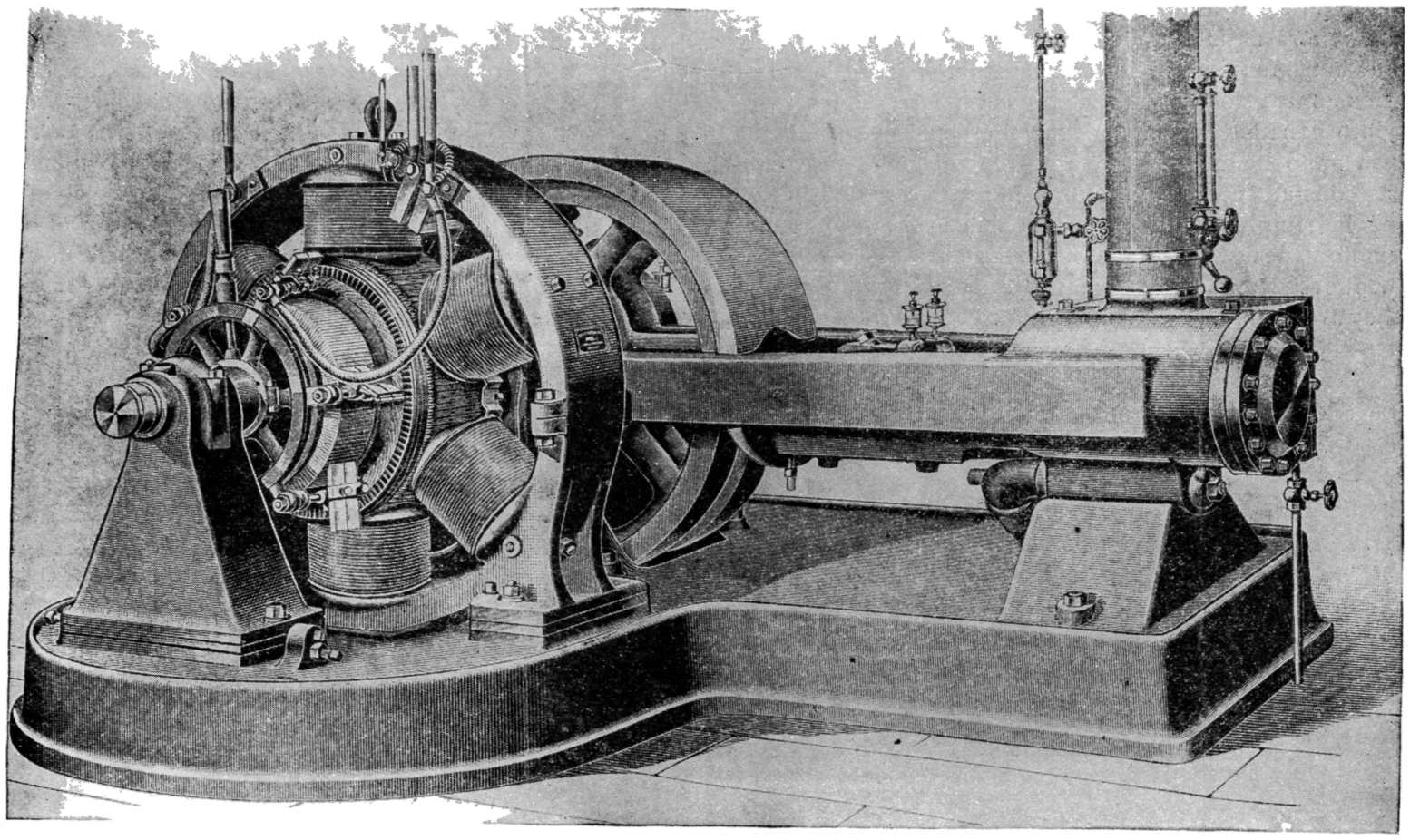

Fig. 3519.

In Fig. 3518 is shown a tandem compound Ball engine direct connected with an eight-pole generator. In this case, as the engine is of the medium speed type, the generator has to be unusually large for its capacity when it is not practicable to extend the engine bed around it so as to hold the outboard bearing. A rigid construction is obtained, however, by using a massive pedestal bearing, and securing this to a foundation which is an extension of the engine proper foundation.

In Fig. 3519 is shown a generator direct connected with a connected with a horizontal engine. The dimensions of this machine can be obtained from Fig. 3521, which shows a side elevation with the part above the centre of the shaft in section, and also an end elevation ; the first being at the right-hand side of the figure, and the last at the left. From this drawing, the enormous proportions of modern electric machines can be appreciated. The shaft is twenty-two inches in diameter, while the outside diameter of the field casting of the generator is nearly sixteen feet.

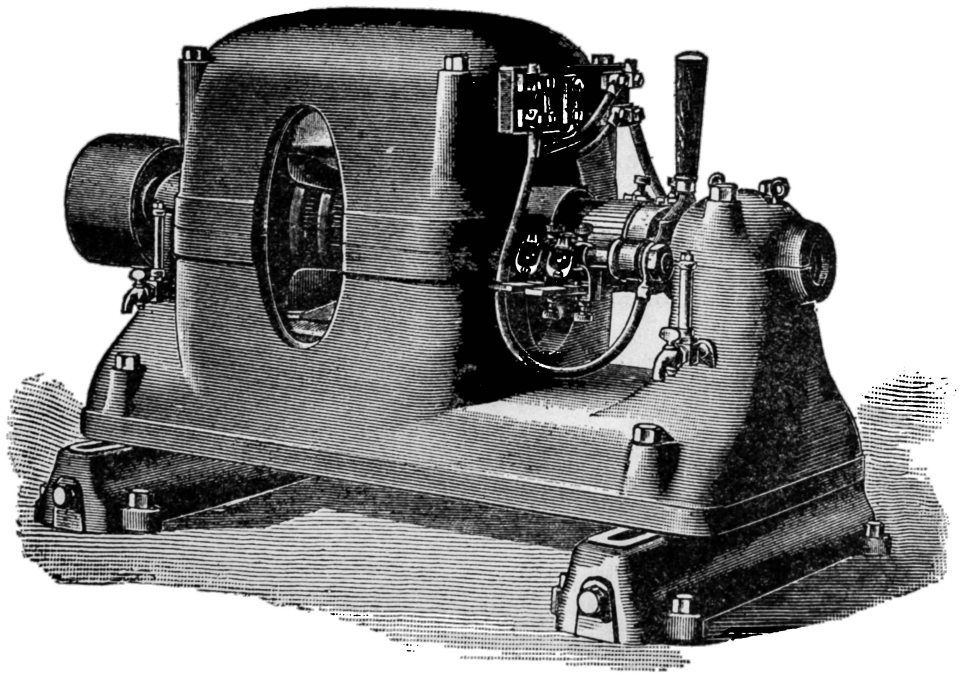

Fig. 3522.

CONTINUOUS CURRENT MOTORS.

ANY electric generator of the continuous current type will develop power if a current of electricity is passed through it, but if the generator is of the constant current type it will have to be somewhat modified in its construction if it is desired to obtain a constant velocity with changes in load. Motors are classified into constant speed and variable speed. When they are made so as to be operated by a current of constant voltage —that is, as constant potential motors—the speed regulation can be obtained by simply winding the machine in the proper manner; but motors designed for operation by currents of constant strength cannot be made to regulate the speed by the manner in which they are wound. They must be provided with some kind of mechanical governor. In discussing the principles of action of generators, it was shown that those of the constant potential type could be made self-regulating by simply winding them in the proper manner, but that those of the constant current type required some form of mechanical regulating device. Thus we see that constant potential machines, whether generators or motors, can be made self-regulating by the manner in which they are wound, and that constant current machines—generators as well as motors—must be provided with mechanical regulating devices. Constant current motors are practically out of use at the present time, and, therefore, need not be considered in this connection.

Constant potential motors can be wound with the field coils in series, in shunt, and with what is called a differential winding, but this last is seldom used now. A generator with the fields wound in series will not deliver a current of either constant strength or constant voltage, and the same machine, if run as a motor, will not maintain a constant speed when the load changes, nor will it give a constant pull with changes in speed. Thus it will be seen that as a motor it acts just the same as a generator; that is, it will not regulate in any way. If the load is reduced it will run faster and the pull will be smaller. If the load is increased it will run slower and the pull will be greater.

Motors of this class—that is, series motors—are used in cases where it is desired to be able to vary the speed, as for example, for railway work. For the operation of machinery, or for any purpose where it is necessary that a uniform rate of rotation be maintained, the field coils of the motor are shunt wound. In connection with generators, we have seen that shunt wound field coils develop currents of constant potential, or voltage, and these same machines, when used as motors, give a constant speed. A machine that will regulate closely as a generator—that is, that will only vary to a small extent the voltage when the current is increased from zero to the maximum amount—will also, if run as a motor, show a very small variation in velocity if the power is changed from nothing up to the maximum capacity. From this we see that the proportions of field coil and armature winding which give the best results in the generator also give the best results in the motor.

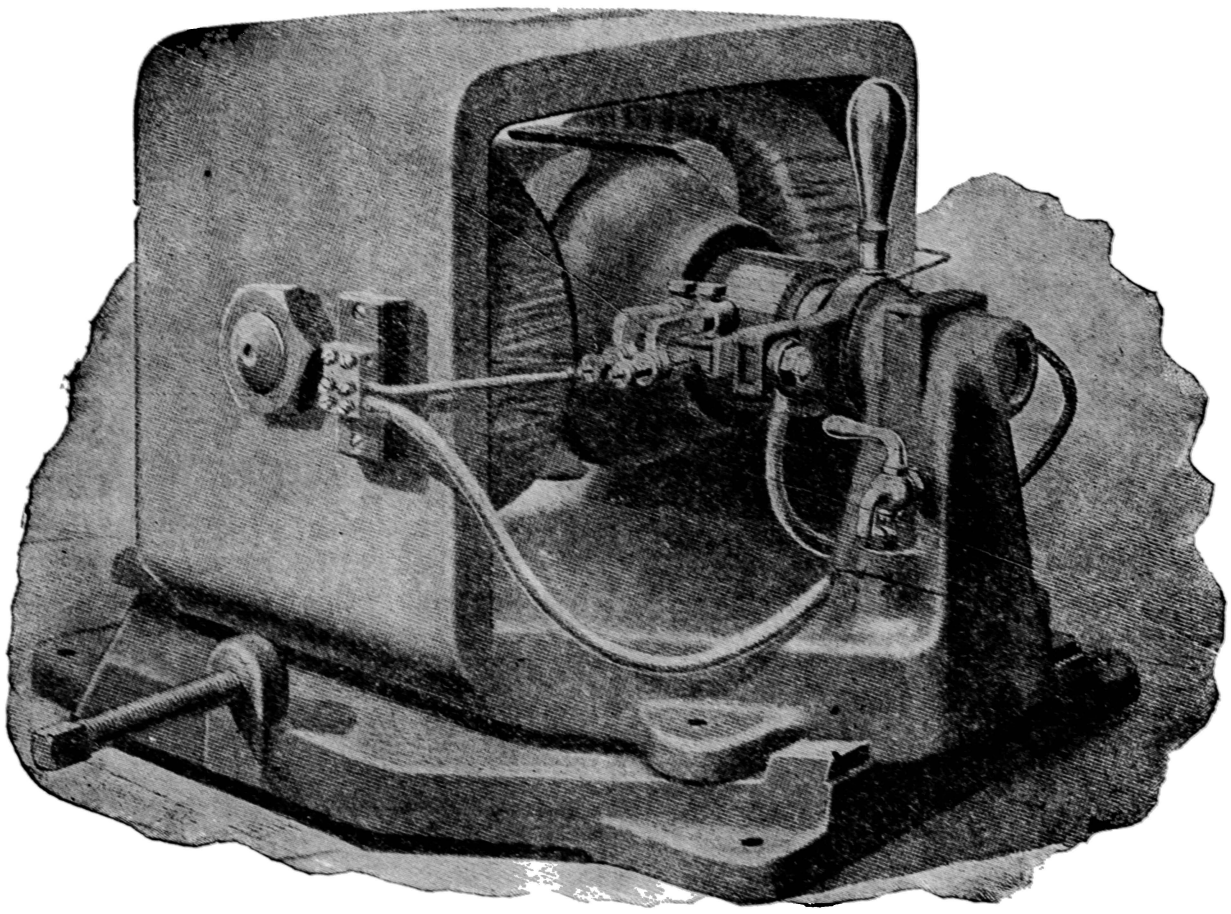

Fig. 3523.

A differentially wound motor is the counterpart of a compound wound generator, and the object of the differential winding in a motor is the same as that of the compound winding in a generator; that is, to secure more perfect regulation, in the case of the generator, of the voltage, and in the case of the motor, of the speed. A differential wound motor is provided with two sets of coils upon the field, one set being the shunt coils and the other the series. It is nothing but a compound wound generator, and, in fact, no changes in the wire connections need be made to cause a compound generator to run as a motor and act as a differentially wound machine. This style of winding is not used to any extent at the present time, because it possesses the disadvantage that if the load is increased far beyond the rated capacity, the machine may be brought to a standstill and then have its direction of rotation reversed. This cannot occur with shunt wound motors, and

as to their regulating qualities, they can be made equal to the best differential machines, if properly proportioned.

Many people who are not familiar with the fundamental principles of science labor under the impression that an electric motor can be made to deliver power without any regard to the amount of electric current that is supplied to it, and, reasoning along this line, assume that the current generated by a machine driven by a 50 horse-power engine could be made to operate a motor that would develop 100 or more horse-power. Such results are impossible. A motor cannot give back more than is put into it, and, in fact, will not give back as much; for there must, under any conditions that can possibly exist, be a certain amount of loss. A generator, as we have stated, will not give back, in the form of electric energy, as much as it takes to drive it; for a portion of the power is consumed in overcoming the friction of the moving parts, and a part in forcing the current through the wires and in heating other parts of the machine.

The losses in the motor are of the same kind, as can be readily understood when we consider that the two machines are one and the same thing, and that the only difference between them is that one is driven by a steam engine and delivers current, while the other is operated by a current and develops power. If a machine will give an efficiency of 90 per cent. when acting as a generator, it will give the same efficiency when acting as a motor; therefore, if a 100 horse-power engine is used to drive a generator having an efficiency of 90 per cent., the energy of the electric current delivered will be 90 horse-power, and if this current is supplied to a motor of 90 per cent. efficiency, the power obtainable will be 90 per cent. of 90 horse-power, or 81 horse-power.

Although any generator is a motor and any motor is a generator, the design of machines intended for the two purposes is not, as a rule, the same. In fact, a difference is required, not on account of the electrical actions, but on account of the conditions under which the two machines have to operate. Motors are generally more exposed to injury from external causes, especially if they are of small size; hence, it is customary to cover the working parts more thoroughly than in the generators. This point of difference is well shown in Figs. 3522 and 3523, which represent medium size motors. In both it will be noticed that the armature, as well as the field coils, are well protected from injury by the falling of objects upon them, and in the case of Fig. 3523 even the commutator is somewhat shielded. These two motors are of the two-pole type, and this is the case with the machines of almost all manufacturers when the capacity is small. Large motors are, as a rule, of the multipolar type; this construction being used for the same purpose as in the case of generators, namely, to increase the capacity for a given size machine.

Fig. 3524 represents a motor of the multipolar type manufactured by the General Electric Company, and, as will be noticed, it differs but slightly from some of the designs of four-pole generators we have shown. Fig. 3525 is another design of motor by the General Electric Company. This is what is known as the iron-clad type; the whole machine, nearly, being inclosed in an iron casing. This inclosed construction is very common for machines that are designed for service in which they are exposed to moisture; but it is not necessary for machines that are properly taken care of, and in such cases is really not as desirable as the more open designs, because the inclosed machines are more liable to be injured by overheating, owing to the fact that they are poorly ventilated.

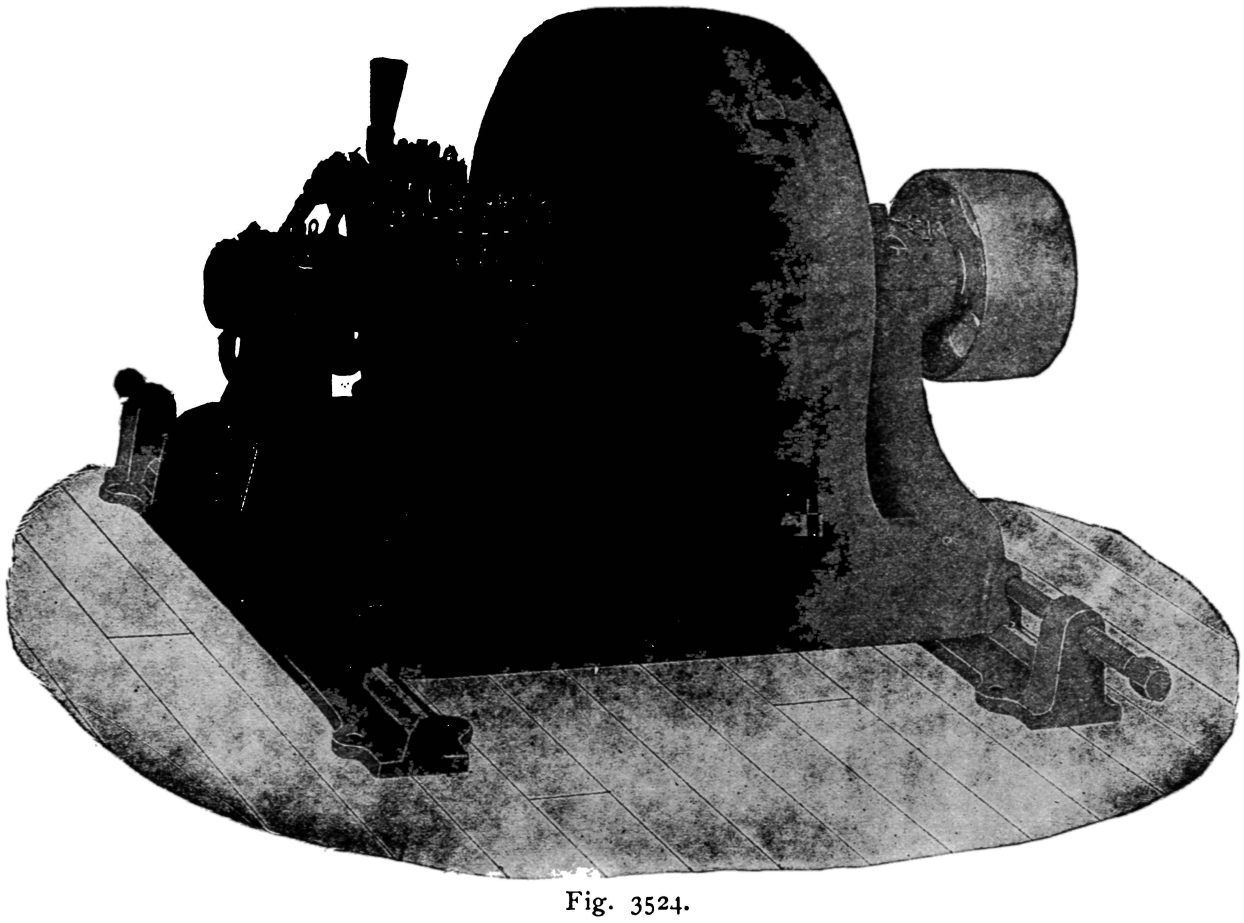

Fig. 3524.

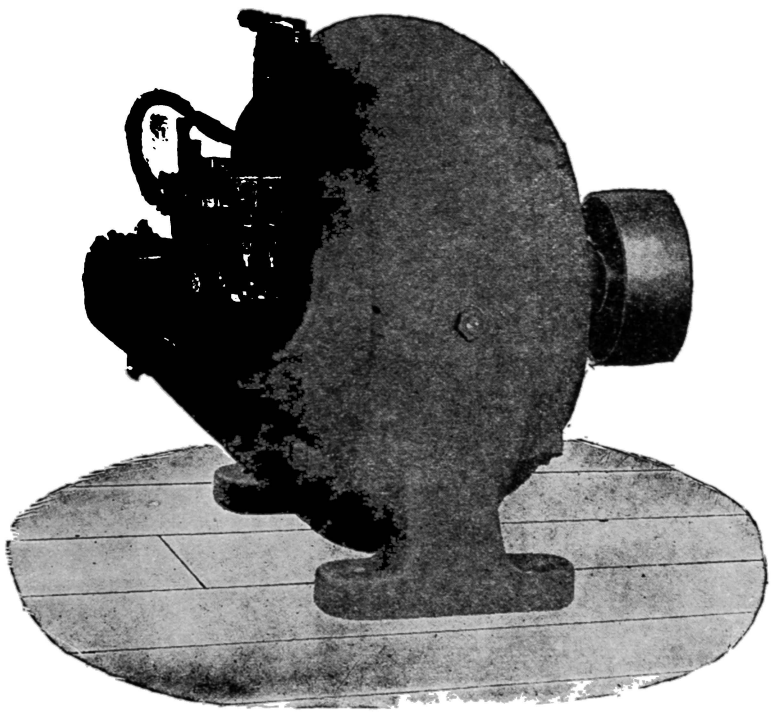

Fig. 3525.

Fig. 3526 shows a type of motor, made by the Crocker-Wheeler Company, to be used in cases where it is practicable to connect the motor directly to the machine it is to drive. It is also used to drive lines of shafting, being coupled directly to the end

of the line. This arrangement of attaching motors to the end of lines of shafting is coming largely into use, and is undoubtedly a desirable plan, as it obviates the use of belting to a considerable extent, and renders it possible to operate any one line without regard to the rest of the shafting, and this cannot always be done where the shafts are driven by belts from one main line.

Fig. 3527 shows a 90 horse-power motor made by the Crocker-Wheeler Company, and, as will be seen by comparing it with the generators of the same firm, it is made of the same general design, thus showing very clearly the fact that the principal difference between motors and generators is that one drives and the other is driven.

Fig. 3528 shows a type of motor made by the Bullock Company. This is a four-pole machine and is entirely inclosed with the exception of the commutator brushes which, as can be seen, are [illegible]

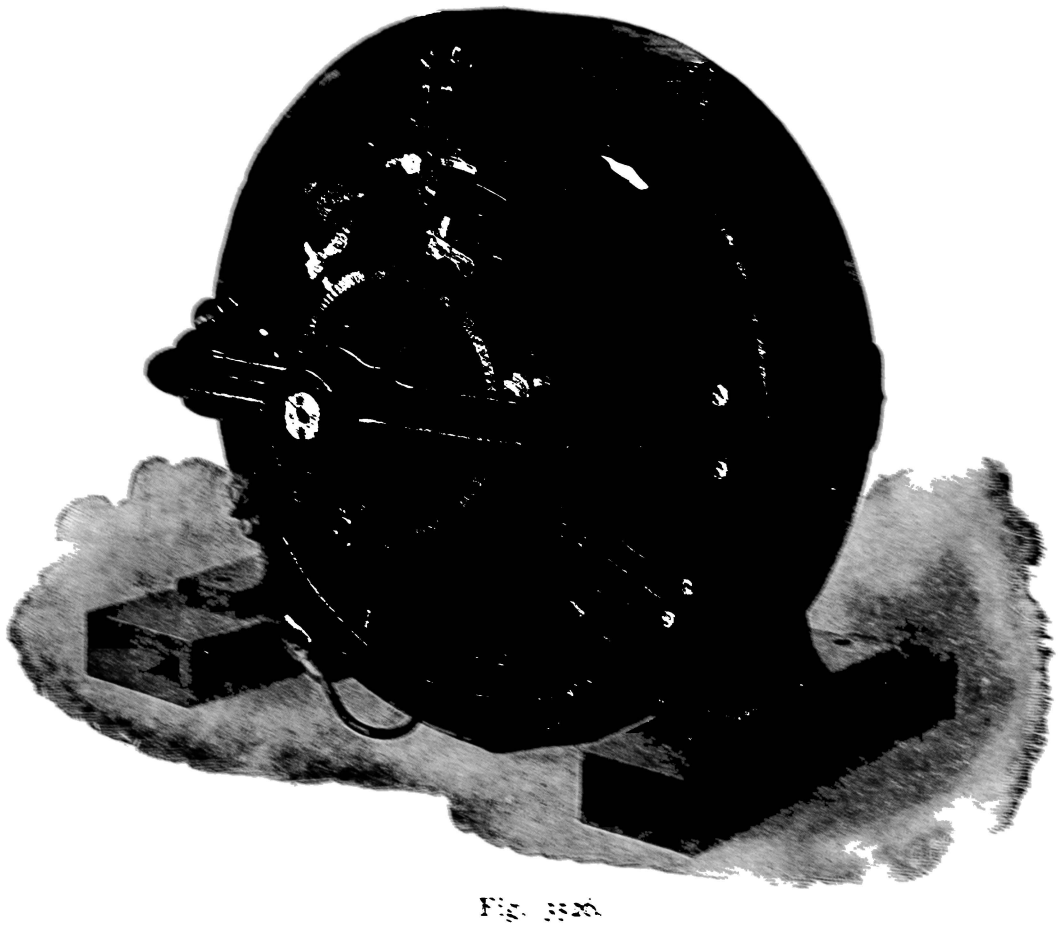

Fig. 3526.

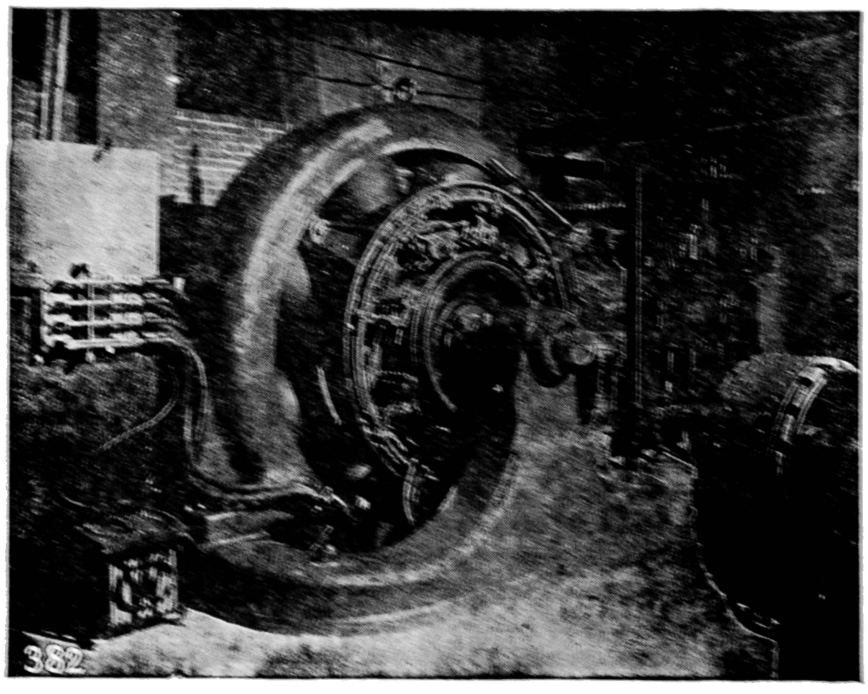

Fig. 3527.

the motors here presented, that they are mounted upon ways, and are provided with screws, by means of which they may be shifted sideways, this being done for the purpose of tightening the belt. This style of construction was very commonly followed in generators some years ago, but it is confined, at the present time, with few exceptions, to generators and motors of small capacity, it having been found that with large and heavy machines it was not as much of an advantage to be able to take up the belt by shifting the machine as to compensate for the reduced stability.

Fig. 3530 shows an arrangement of motor, as made by the Crocker-Wheeler Company, for cases where it is desired to operate a machine requiring a considerable amount of power and running at a low velocity. The use of gearing in such cases, as can be readily understood, obviates the installation of a counter-shaft, with its additional belting.

THE PRINCIPLE UPON WHICH ELECTRIC MOTORS ACT.—The manner in which an electric motor acts—that is, the process by which the pull of the armature is developed—can be understood

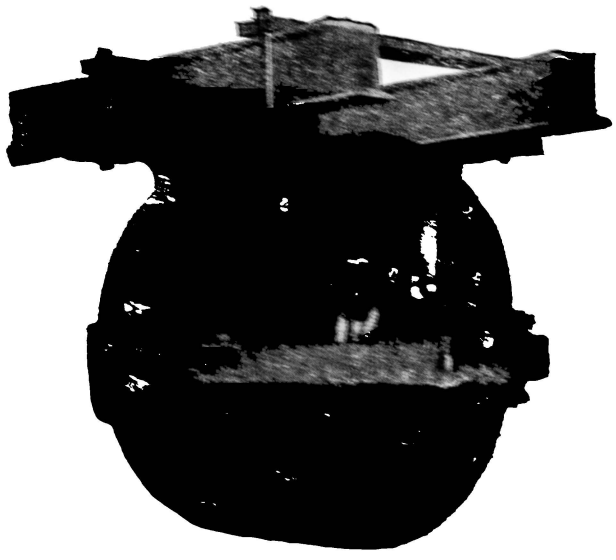

Fig. 3528.

by referring back to Fig. 3431. In this figure it will be seen that as the commutator brushes are set on the line A B, the current circulates around the armature core at right angles to this line; hence the magnetic poles of the core by the armature current will be on the line A B, and consequently at right angles to the poles of the field. This being the case, we can see at once that there will be exerted a pull between the two, the field poles attracting those

of the armature, and this pull will be proportional to the strength of the two sets of poles. As the strength of the poles is proportional to the strength of the current flowing in the wire that magnetizes them, it follows that the stronger the current the greater the pull. In a shunt wound motor of the constant potential type, the field magnetizing currents remain constant; therefore, the pull of the field poles does not change, but the current through the armature varies; hence, the pull of the armature poles will be directly proportional to the armature current.

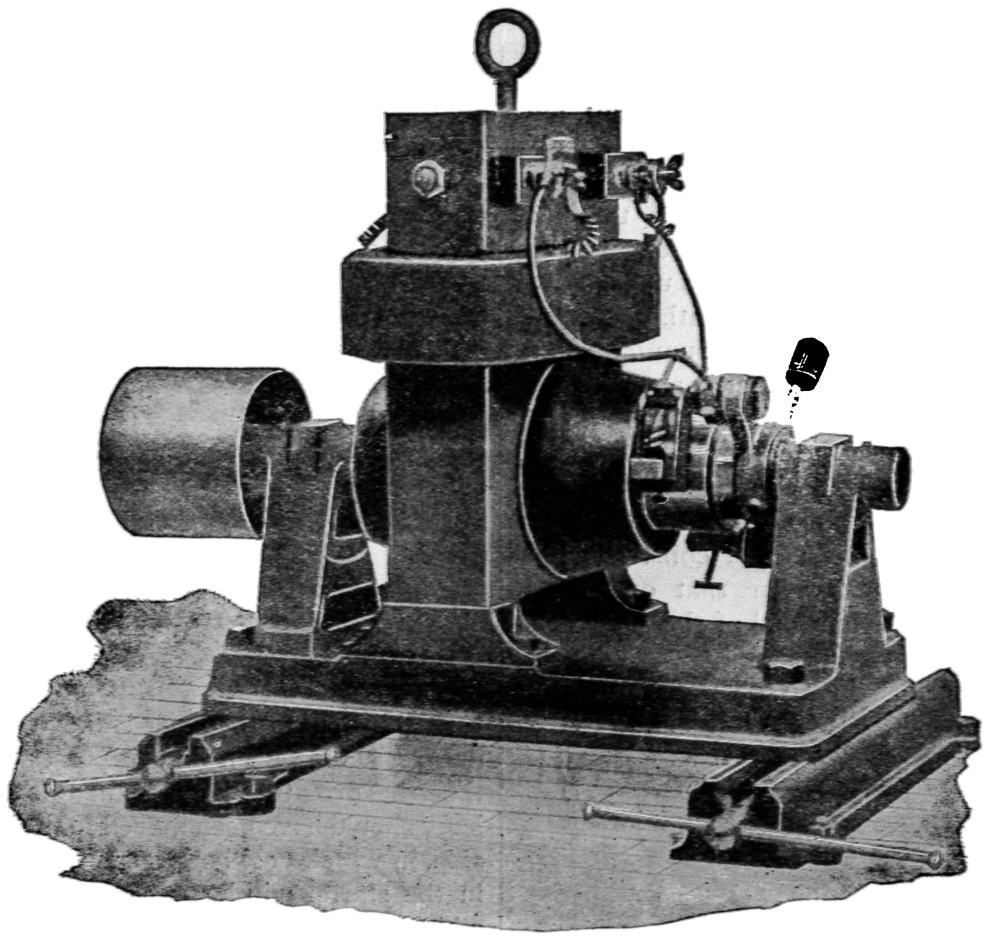

Fig. 3529.

The resistance of the armature wire, in a shunt wound motor, is very low; so low, in fact, that of itself it is not capable of offering much resistance to the passage of the current through it. On this account, if such a motor is connected with a source of current without additional resistance in the armature circuit, the current that will flow through the armature, while it is at a state of rest, will be so great as to burn the insulation in very short order. Not only will the wire be burned out, but the magnetic force developed in the armature by the excessive current will be so great as to entirely overpower the field magnetism, and, as a result, the motor will not move. Inasmuch as the field magnetism is in one direction, and that of the armature in another, it can be readily seen that the armature tends to pull the field around just as much as the field tends to pull the armature around, but as the field is stationary, it cannot be moved; hence, the armature has to move. This reaction between the two magnetizing forces, however, results in distorting the field, causing the magnetism of the poles to be stronger at one corner than at the other. This distortion is spoken of as the twisting of the field by the armature reaction. Now, if the armature current becomes sufficiently strong to make the armature magnetism vastly greater than that of the field, the result will be that the field magnetism will be twisted around so much as to be completely neutralized, and under these conditions there will be no pull exerted. This is the state of things when an attempt is made to start a motor without additional resistance in the armature circuit.

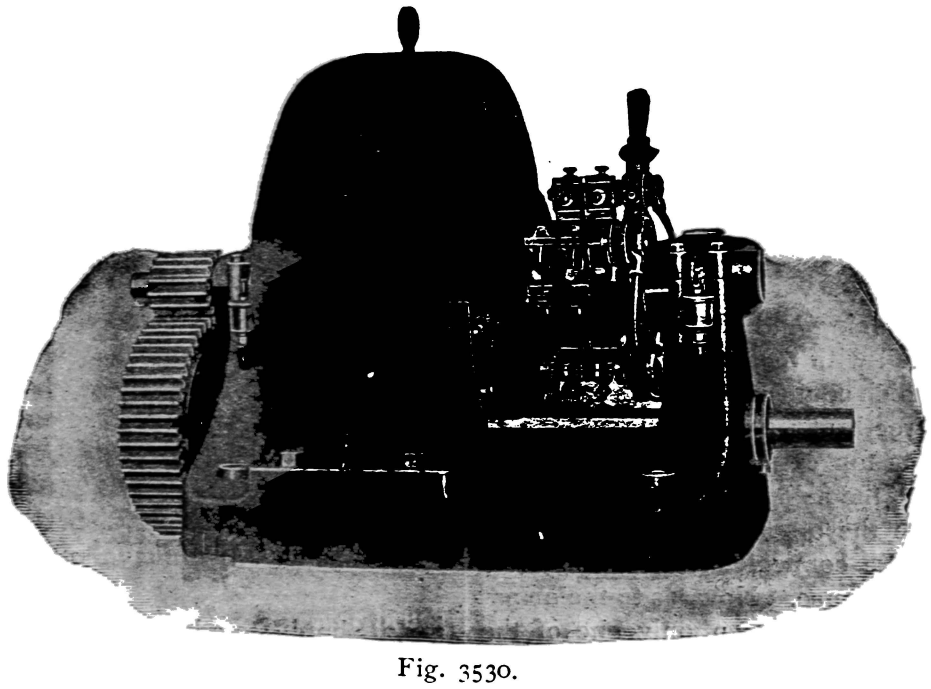

Fig. 3530.

From the foregoing it will be understood that to start a constant potential motor, of the shunt field type, it is necessary to introduce an external resistance in the armature circuit; but, as can readily be seen, it would not be proper to keep this resistance in the circuit while the motor is running; hence, a device must be pro-

vided for starting a motor that will cut resistance into the armature circuit and then cut it out. Such a device is called a motor starter.

From Fig. 3531 the general appearance of a motor starter can be obtained, such an apparatus being shown in the upper left-hand corner of the illustration. It may be well to mention at this point that it would not meet the requirements if we arranged the motor starter so as to cut resistance into the whole motor circuit, for then the only effect would be to reduce the current through the field just as much as through the armature, and this would leave us practically just where we were without the starter. The resistance must be introduced exclusively in the armature circuit, and the manner in which it is accomplished can be understood from the following:

In the illustration, Fig. 3531, it can be clearly seen that two wires connect with the upper part of the motor starter, and that there are three wires leading to the motor. The two upper wires come directly from the line that supplies the operating current. The three wires running to the motor connect, one with one end of the field coils, one with one of the commutator brushes, and the third one with the remaining brush and the other end of the field coils. Thus it will be seen that one brush and one end of the field coils have individual wires connecting them with the starter, but

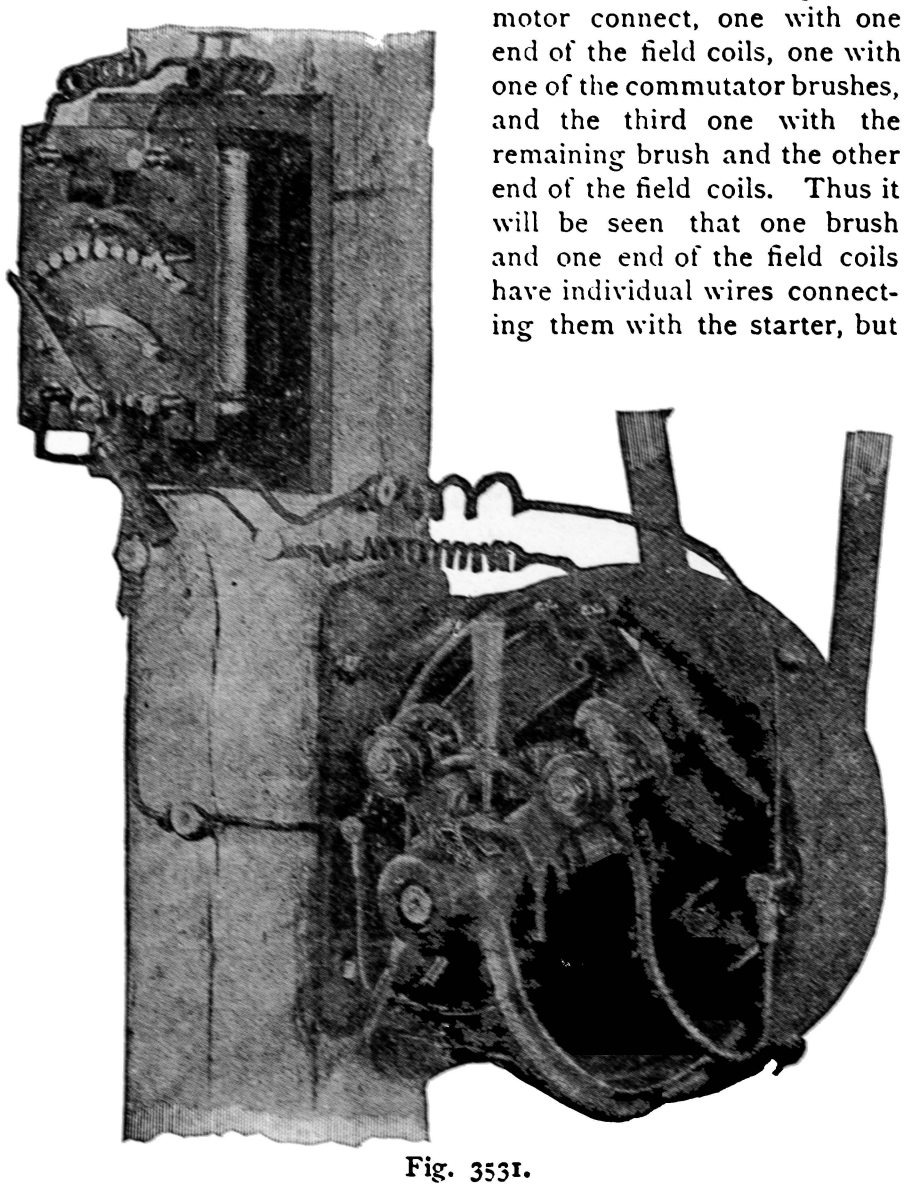

Fig. 3531.

that the other brush and the remaining end of the field coils are both joined together and connected with the starter by means of a single wire. This last wire, which connects with one end of the field and also one brush, goes directly through the starter to one of the line wires leading into the top of the starter. The wire which connects with the free end of the field coils is also connected, through the starter, directly with the other line wire. Thus it will be seen that the field coils are connected to the line wires without the intervention of any resistance. Now, as to the armature, the case is different, for, as can be seen, only one of the brushes connects separately with the starter, the other being in conjunction with a field coil end. The free brush which connects with the starter, goes directly to the last contact at the right-hand side of the row, forming a curve in the centre of the apparatus. The lever seen resting upon the last contact to the left is connected with one of the line wires, the same one to which the free end of the field coils is connected. The contacts disposed in the curved line are connected with each other electrically, but between each pair of contacts there is a certain amount of resistance, this amount being such that the sum of all the resistances, between all the contacts, is as much as may be required to keep the current through the armature down to the proper strength in starting. To start the motor, the lever is moved from a point back of that in which it is shown—that is, from a point further to the left—to its present position. The motor, by this movement, is connected with the circuit, with all the voltage of the current acting directly upon the field coils, and with the armature in circuit with all the resistance contained in the starter. As fast as the arma-

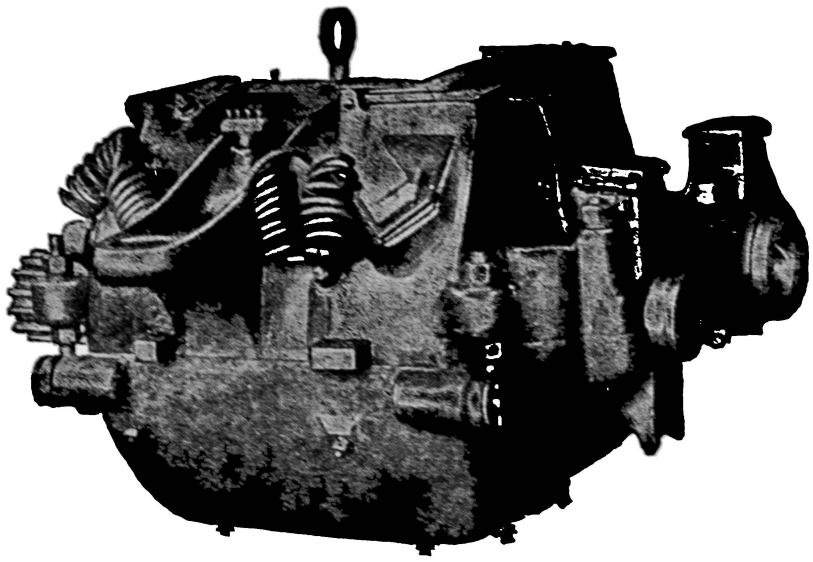

Fig. 3532.

ture gains speed the lever is moved toward the right, thus cutting out resistance each time it passes on to a new contact. By the time the armature has reached its full velocity, or nearly so, the lever should have been moved to the last contact, on the right-hand side, in which position, as can be seen, all the resistance contained in the starter will be cut out of the circuit; for then the lever, which connects directly with one of the line wires, will be in contact with the last of the curved row of contacts, and this is connected directly with the commutator brush. The handle of the lever is moved by the hand of the person who starts the motor,

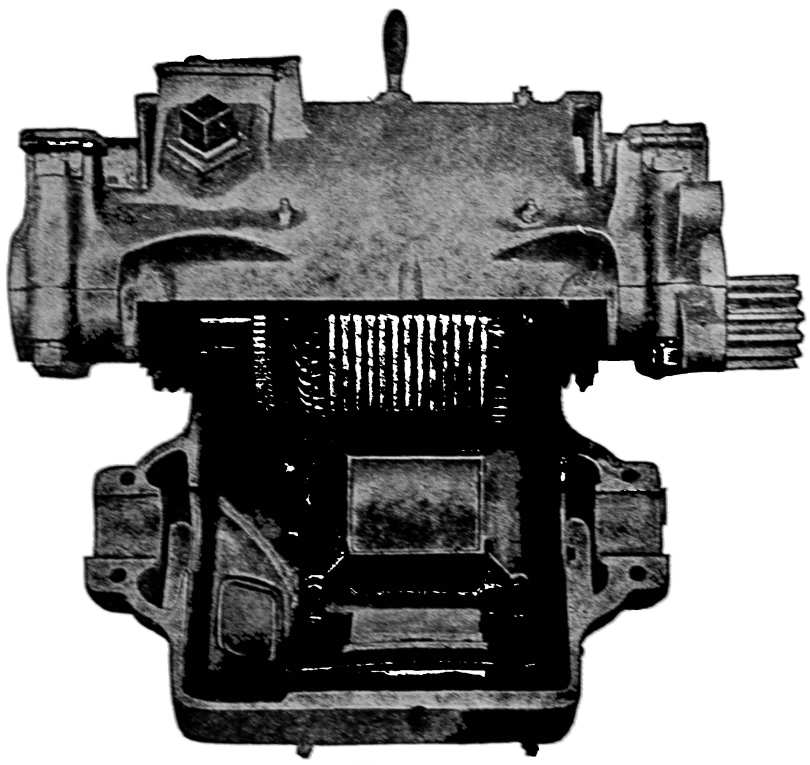

Fig. 3533.

and it should be advanced as fast as the armature gains headway, the time required to move it all the way from the start to the last contact ranging from, say, five to about twenty seconds, depending upon the size of the motor and the amount of load under which it has to start. With a small motor the time will be less, as the smaller the armature the sooner it will get under way, and if it is running light the time will be still further reduced. With a large motor, fully loaded, the time must necessarily be considerably increased.

A motor starter that will accomplish only what has been just

explained is called a simple starter, but there are other starters that are much more elaborate in their action, and in addition to affording means for starting the motor, also prevent it from being injured by excessive currents due to any cause. These devices are necessary, owing to the fact that a shunt wound motor will not stop even if it is loaded far beyond its capacity. It cannot be stalled until the current becomes so strong as to burn it out. Suppose a motor is running with a fair load. If more machines are thrown on to it the only effect produced, so far as can be seen, will be a slight reduction in speed ; but this will be so small with a close regulating machine that it will not attract any attention. Within the motor the unseen effect is very different. It results in increasing the current, and this increases the temperature of the armature, until it finally reaches a point where the insulation becomes charred ; then the current jumps across, from wire to wire, and the armature becomes short circuited and useless. To prevent such accidents, several devices are used, the simplest of all being a piece of lead wire of such size that it will be melted by a current not strong enough to injure the motor. Other devices operate by means of magnets that are made energetic by the current, and when this reaches the danger point, it renders the magnet so strong that it throws a trip and thus allows a switch to fly open and break the circuit. The latter device is called a circuit breaker, and will be more fully described hereafter. These circuit breakers can be applied to motor starters, and when they are, the apparatus is called an automatic overload motor starter.

There is a way in which a motor can be destroyed by an excessive current in which the overload starter will not protect it. To illustrate such a case, suppose a motor is running along nicely and that suddenly the current in the line dies out ; the effect will be that the motor will come to a standstill. Now suppose that in a minute or so the current starts up again ; the motor will be connected in the circuit, and without resistance in the armature branch, and as the latter will be at a state of rest, there will be an enormous rush of current through it, which will soon burn it out. To guard against such cases, which are not uncommon, it is necessary to provide a device that will open the motor circuit, or disconnect it from the line, whenever the current fails. Such a device can be made independent of the motor starter, but it is customary to combine it with the former.

From the foregoing it will be seen that there can be three different types of motor starters, the simplest being that which will enable us to start the machine properly; the next in order the type that, in addition to starting the motor, will also protect it if the currrent becomes too strong ; and the most complete kind, that which will protect the motor if the current dies out as well as if it becomes too strong. These three types of motor starters are designated as plain starters, overload starters, and overload and underload starters. Further on, the construction of these different styles of starters will be fully discussed, but we will leave the subject for the present to take up the description of motors of the variable speed or series wound field coil type.

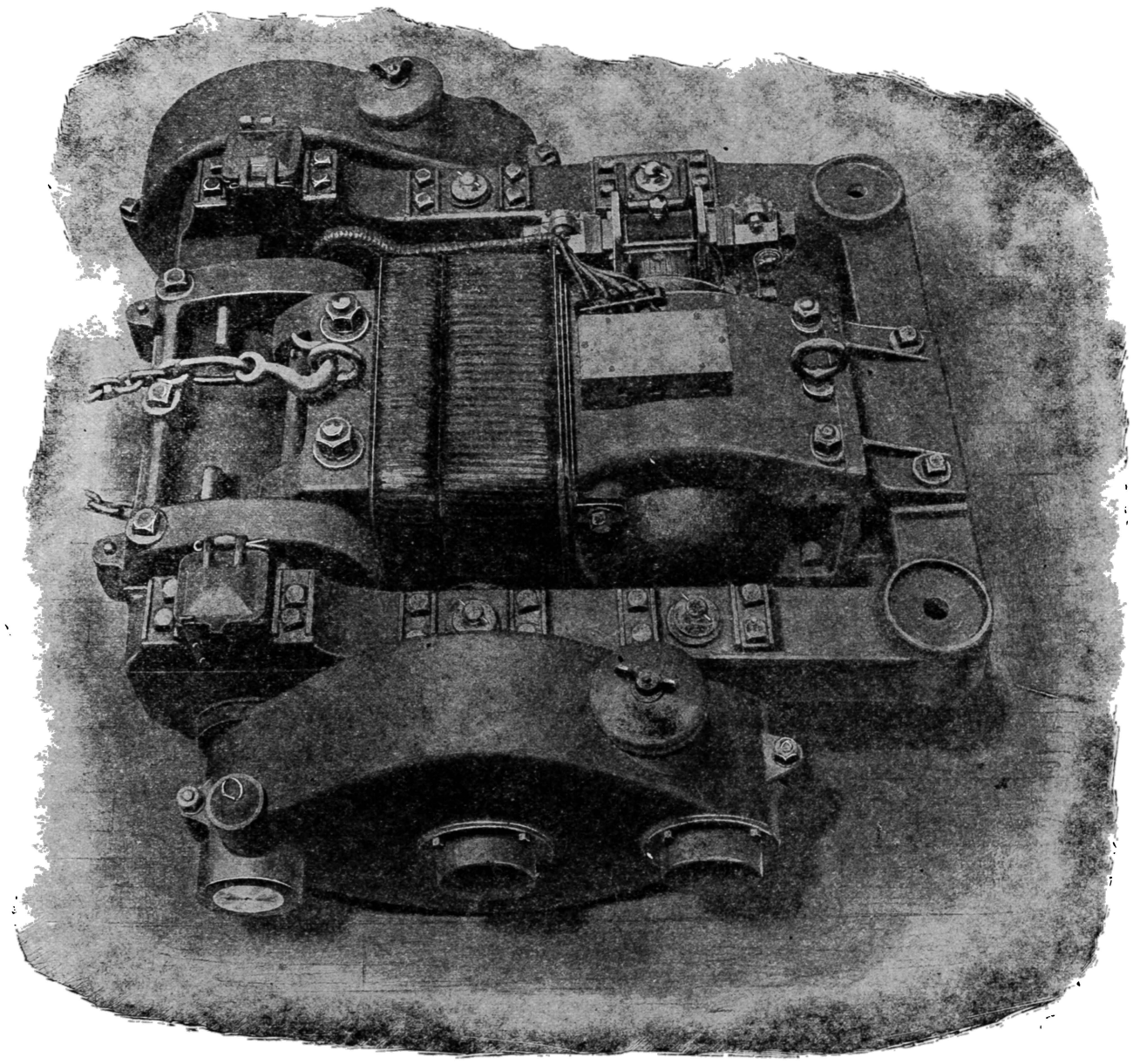

Fig. 3534.

RAILWAY MOTORS.—The most important application of series wound motors is for the propulsion of railway cars. For this class of service it is necessary to have a machine that is capable of running at different velocities, and also that can put forth a great effort in the act of starting. In this latter respect the series motor has special advantages, for, as can readily be seen, when the current strength increases, it not only strengthens the armature, but also the field, from the fact that all the current passes through the field coils. On this account, if the motor were started without resistance, the effect would be not to destroy the pull, but, instead, to enormously

increase it. Under such conditions, however, the current strength would be so great as to burn out the machine, and the field coils would be injured just as much as the armature, if equally proportioned, as the whole current passes through both. It will be understood, then, that even with this type of machines it is necessary to provide a starting resistance; but this is placed in the motor circuit, and not in the armature circuit. In fact, as the armature and field are connected in series, it can be readily seen that the resistance cannot be in the armature circuit alone, for the armature has not a circuit all to itself.

One of the various types of railway motors is shown in Figs. 3532 and 3533. It is one of several designs made by the Westinghouse Company. One of the illustrations shows the machine closed and ready for action, while the other shows it open, so as to expose the interior construction. Railway motors, unless of very large size, are made entirely inclosed, this construction being necessary from the fact that when a car is running through a street covered with mud and water, the entire under part of it becomes covered with mud, and if the motors were open at any point they would soon be destroyed by the accumulation of water upon some

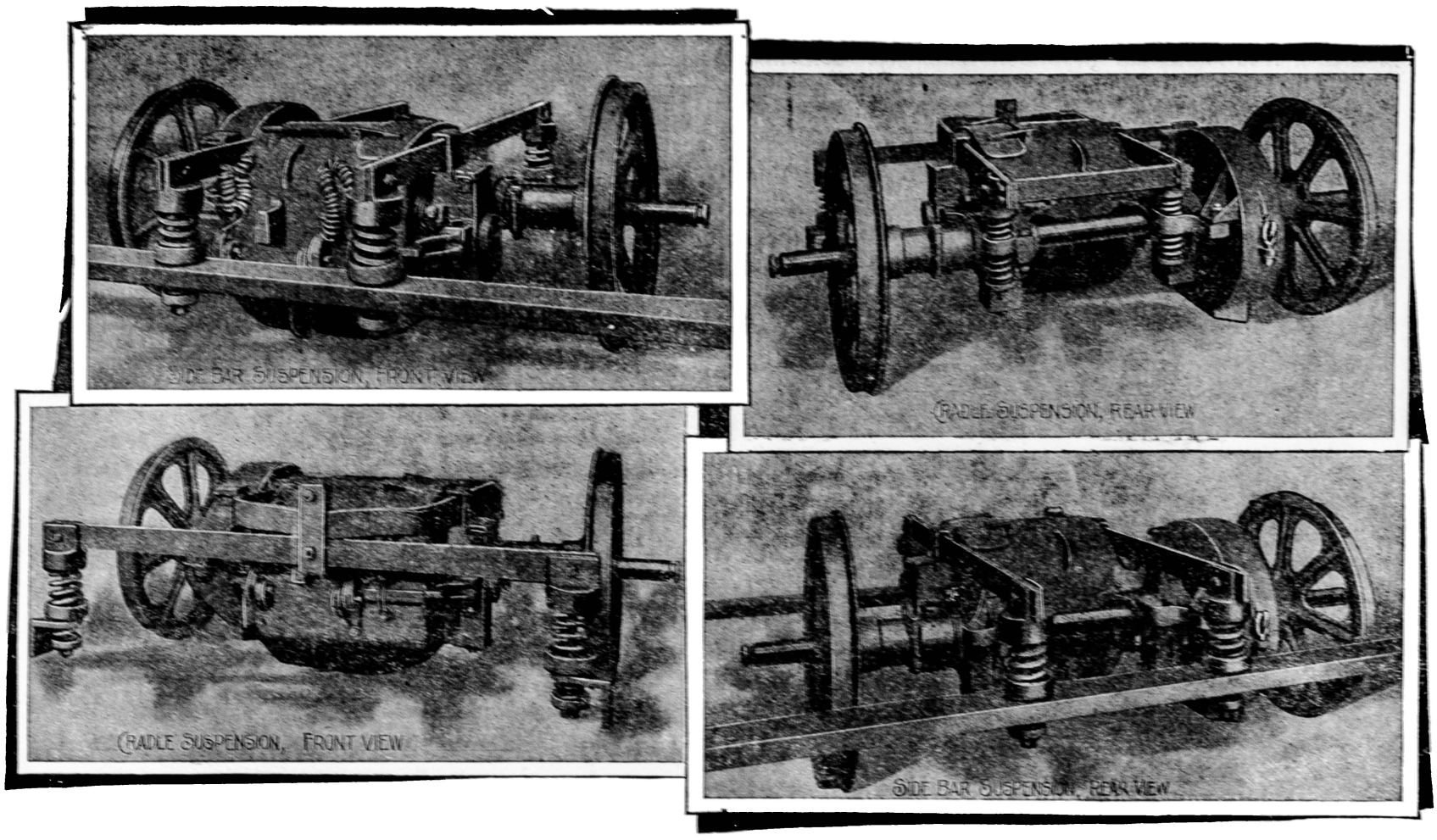

Fig. 3535.

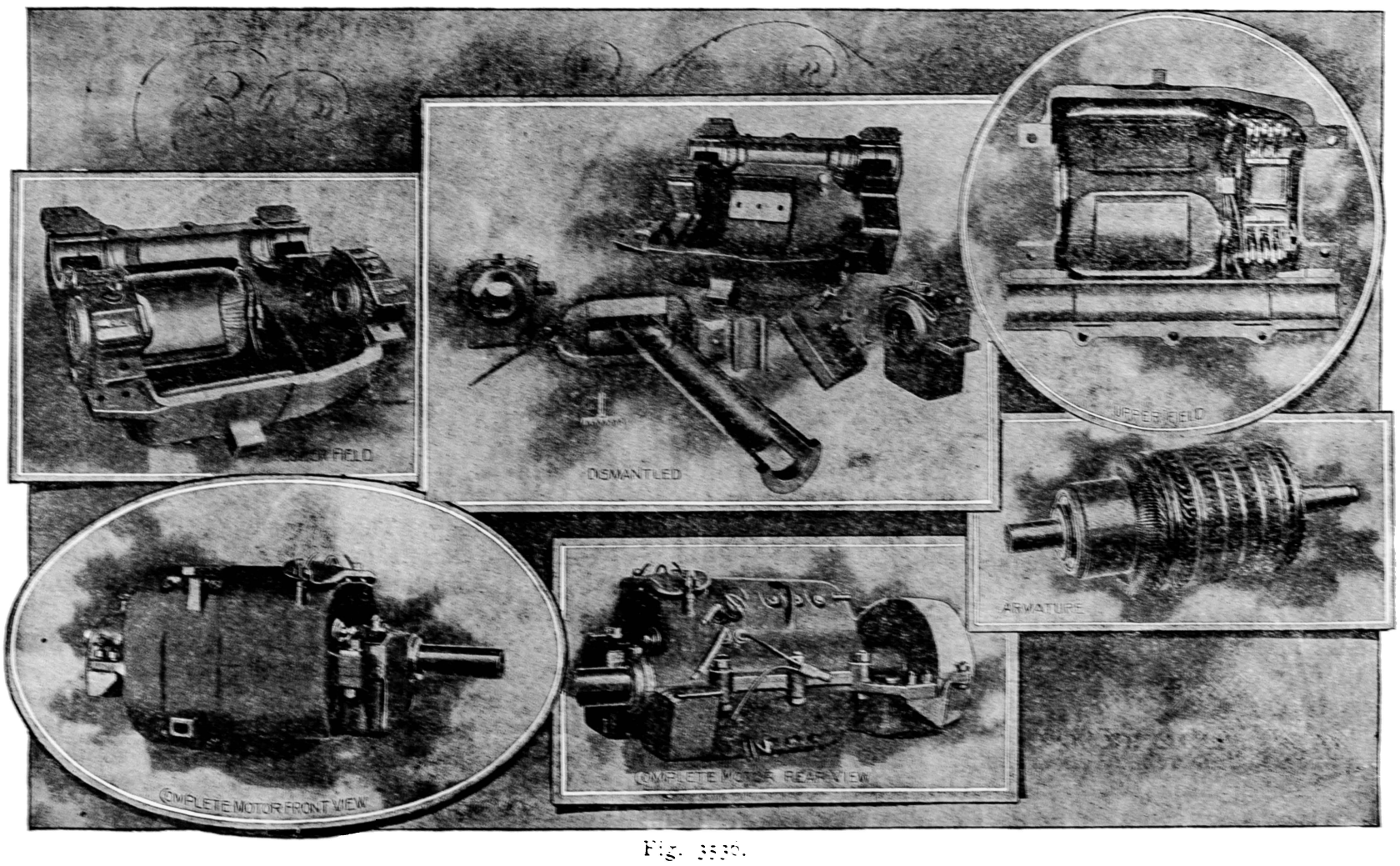

Fig. 3536.

vital point. As it is necessary that these machines be so made that they can be readily examined and taken apart when repairs are required, they are generally constructed so as to divide at the centre line, the lower half being hinged to the upper and arranged so that it can be easily lowered. The armatures are also so fastened in the bearings that they may be held in the upper or the lower half when the machine is opened. The motor shown in Figs. 3532 and 3533 is of the four-pole type, which is the kind used almost exclusively at the present time. The armatures are series wound, with formed coils ; the winding, therefore, belongs to what we have described as wave winding. With this winding, it will be remembered that we said it was necessary to use only two brushes, and this is the number used in railway motors. These brushes are placed upon the upper side of the commutator, so as to be readily inspected when the car is in motion. It will be noticed in Fig. 3532 that a hinged cover is shown at the front end of the top part of the motor. The brushes are directly under this cover, and by opening it they may be seen and also adjusted so as to run with the least amount of spark.

Fig. 3534 illustrates the first type of Westinghouse railway motor, made in 1889, and by comparing it with Fig. 3532, the great improvement that has been made in this direction can be realized.

Fig. 3535 illustrates two methods of suspending the motors in the truck employed by the Westinghouse Company, so that they may be spring supported, and from Fig. 3536 a knowledge of the construction of the several parts of the motor shown in Fig. 3532 can be obtained.

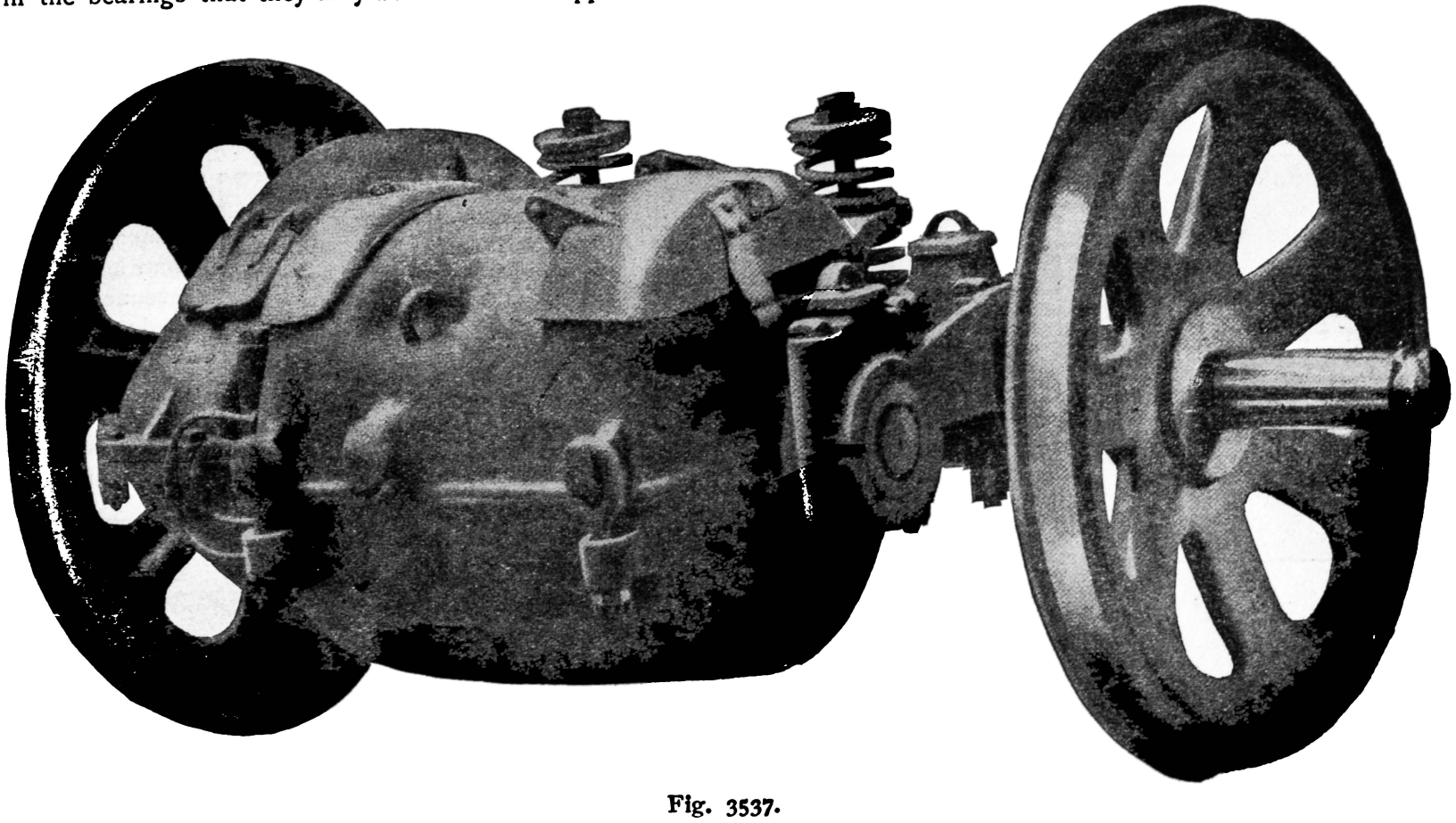

Fig. 3537.

In railway motors it is necessary to prevent the oil or grease used on the bearings from getting into any of the armature coils, or upon the commutator surface ; for if it does, there is great danger of short circuiting the part upon which it may accumulate. To prevent this trouble, in the motors shown in Fig. 3532, the casing is made with a space between the ends of the bearing and its side ; that is, the bearings are built outside of the casing proper, as can be well seen in Fig. 3533. By adopting this construction, there is little danger of the grease working its way into the vital parts, for in passing through the open space

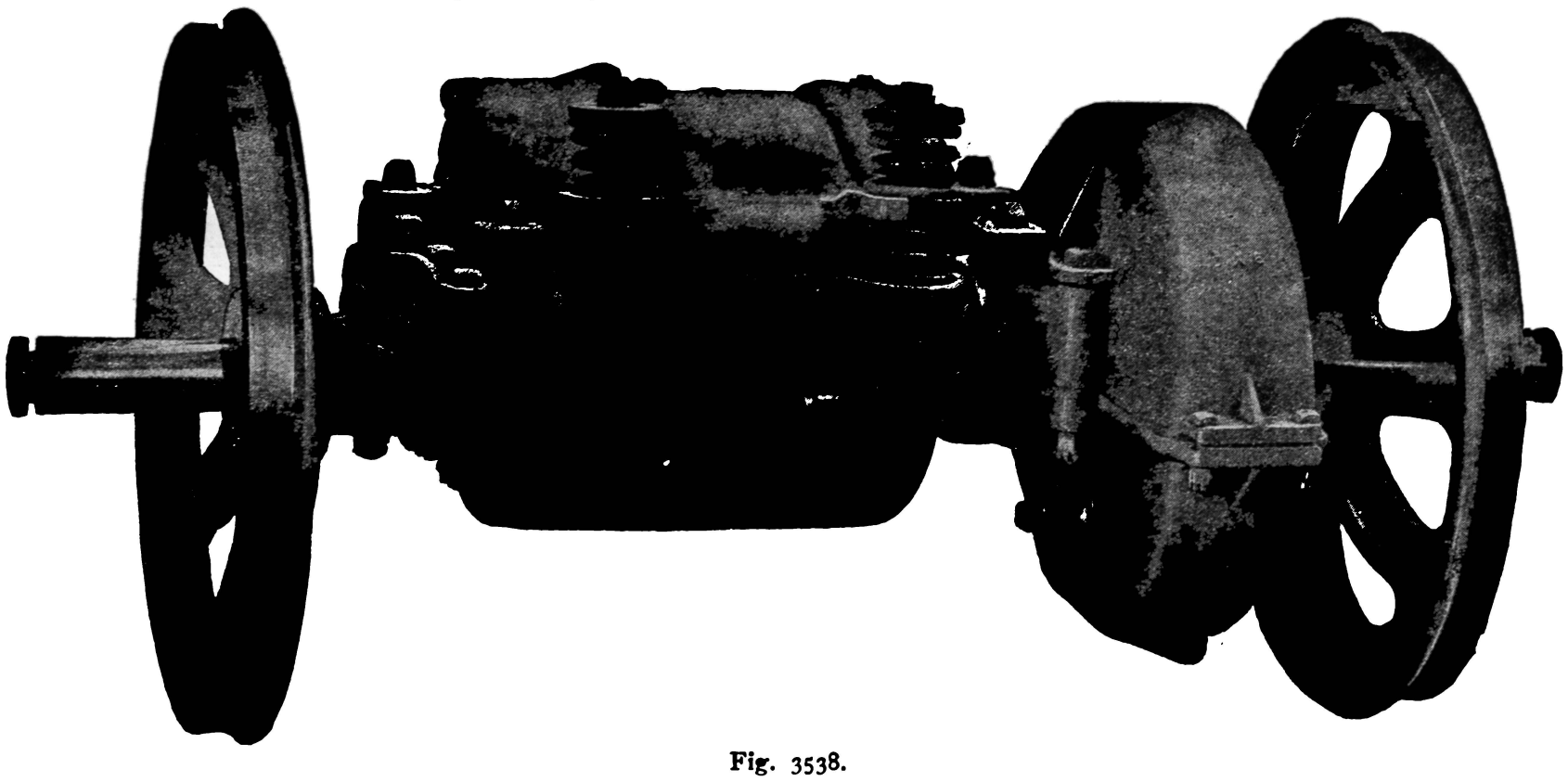

Fig. 3538.

between the bearing and the casing side it is sure to fall to the ground.

Figs. 3537 and 3538 show two views of the railway motor made by the Walker Company for street car service. In these illustrations the manner in which the motor is connected with the axle can be readily seen. In the previous examples it will be noticed that there is a pinion upon the end of the armature shaft, and from these illustrations it will be understood that this pinion meshes into a spur gear fastened directly to the axle. The gears are generally in the proportion of one to four, so that the speed of the motor armature is about four times as great as that of the car axle. In Fig. 3537 the cover through which the brushes are reached is very clearly shown. As the gears are made of steel and are inclosed in a dust-and-water-tight casing which is filled with oil, they wear out very slowly.

In Fig. 3539 are shown the various designs of railway motors made by the Walker Company, the smallest one being that shown in Figs. 3537 and 3538, which is of 25 horse-power capacity, and the largest that seen at the extreme left, which is of 200 horse-power. All the motors, except this last one, it will be noticed, are entirely inclosed, this being necessary, as they are intended for use on surface roads that may run through muddy streets; but the last and largest design is intended for regular railways or elevated roads which can be kept entirely free from mud and water; hence, such complete protection is not required and it is not used, as it is a great advantage to be able to ventilate the interior of the motor.

The Walker motors are mounted so as not to unduly strain the car wheel axles. The motor is therefore suspended by springs at both ends. One of these is attached to the car truck and the other directly to the axle, but here the weight is spring supported; hence, any jar that may be caused by unevenness in the roadbed will not affect the axle, as it will be expended upon the supporting springs. The method of mounting is shown in Fig. 3540.

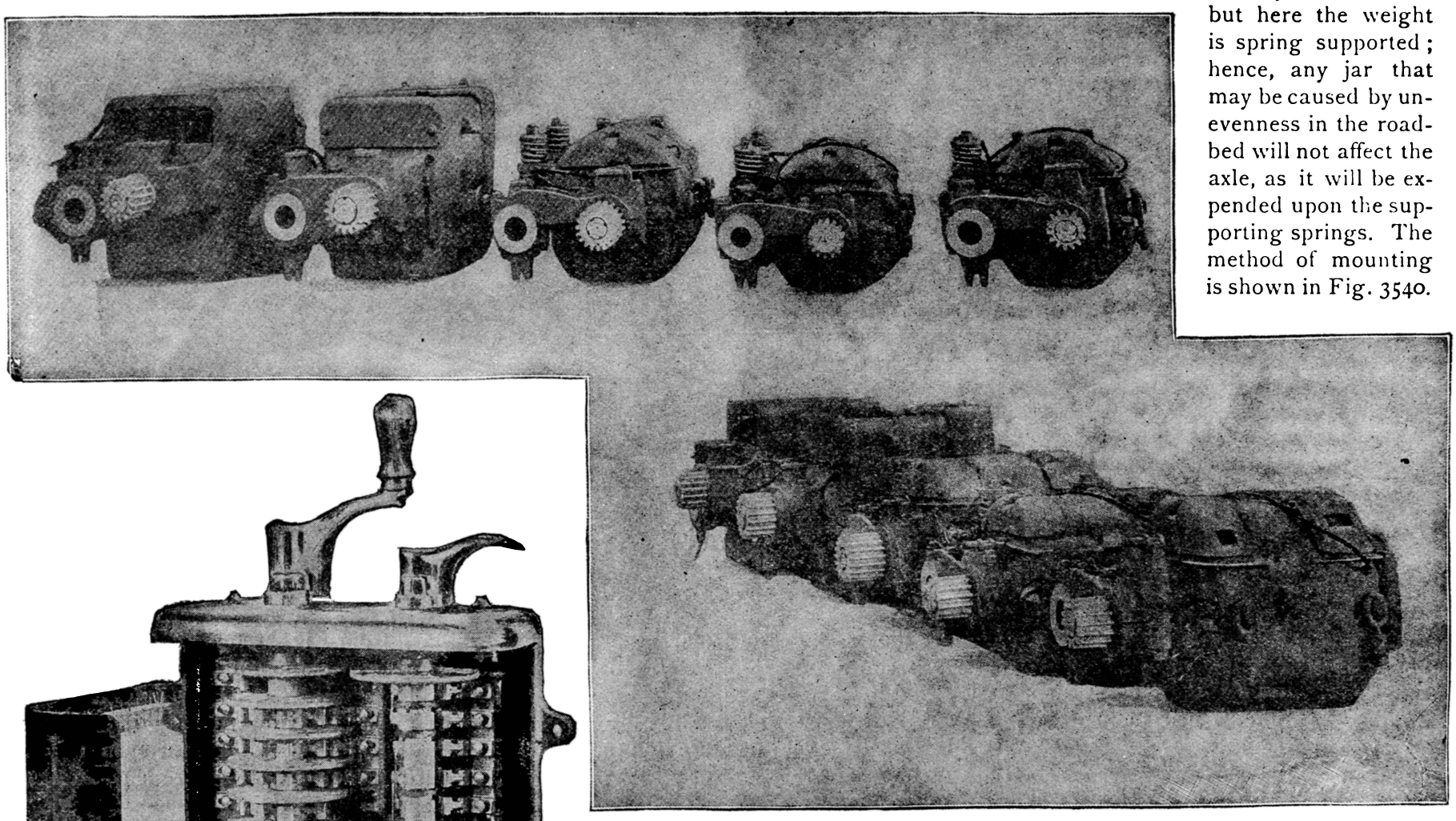

Fig. 3539.

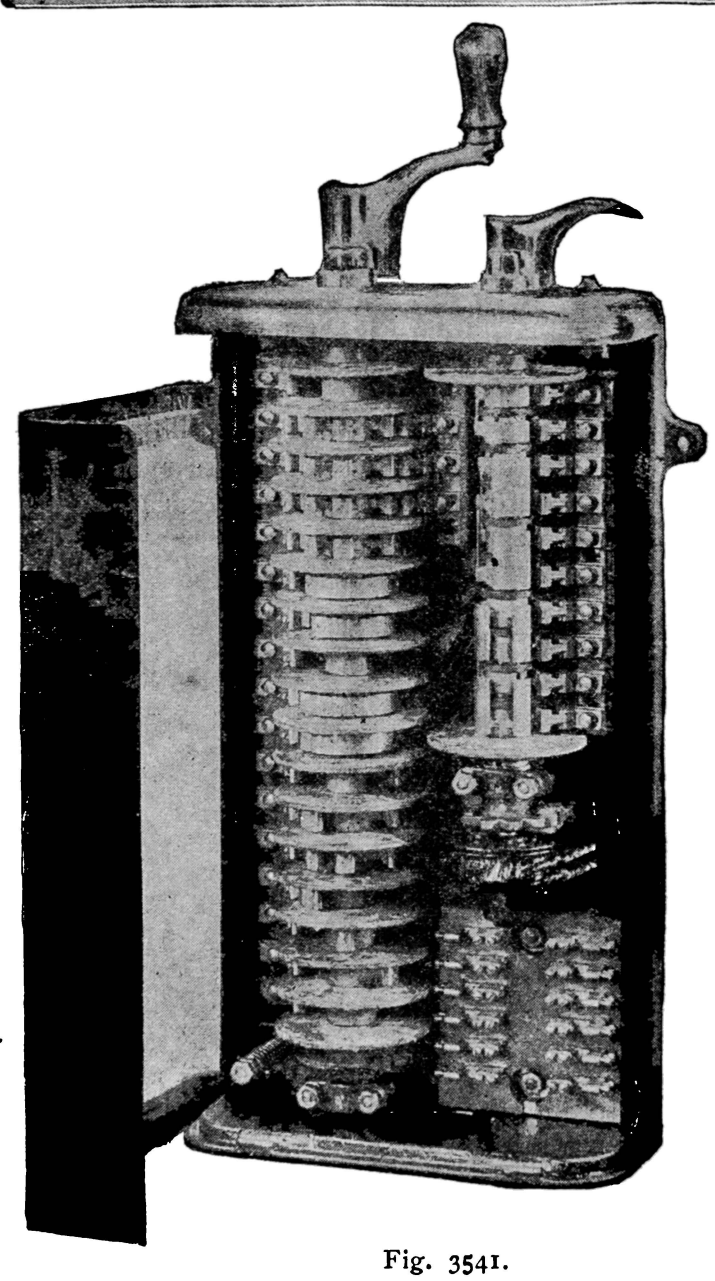

Fig. 3541.

As railway motors are series wound, they can be run at various speeds; and as it is necessary that the velocity be under the control of the motorman, the controlling switch is so made that by moving the handle one way or the other, the speed may be varied, or the car may be stopped or run in either direction. To prevent the current from rising to a dangerous strength, on the start, it is necessary to provide a starting resistance. This resistance can be considerably reduced by arranging the motors in what is called the series parallel connection. To understand this it may be well to state that in almost every case two motors are used to a car. If

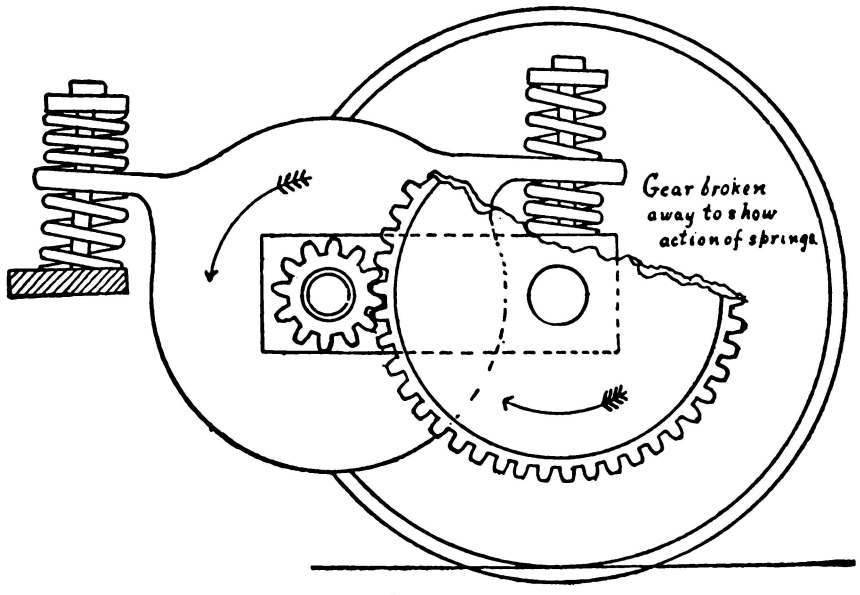

Fig. 3540.

only one motor is used the series parallel connection cannot be employed. With the series parallel connection, when the car starts the two motors are connected in series, so that all the current passes first through one motor and then through the other, and, in addition to this, through the starting resistance. As all the current passes through both motors the starting pull is very great, and it is on this account that trolley cars cannot be stalled with the heaviest loads. As soon as the car gains a slight headway the motorman moves the switch so as to first cut out the resistance. Then a further movement changes the connection of the motors, so that they are in parallel, and each one takes one-half of the current passing through the car. In this last position the pull is not so great as in the start, but the speed is much higher. If the car is running too fast, or if it is desired to stop, the motorman turns the controller handle around to the stop position. In some controllers the direction of the car can be controlled by the direction in which the controller handle is turned; that is, if it is turned in one way the car will go ahead, and if turned in the opposite way the car will go back. In most controllers, however, a separate handle is provided for reversing the direction of the car.

Fig. 3541 shows the interior of the controller used by the Walker Company, and it will be noticed that it is a massive structure as compared with the motor starter shown in Fig. 3531. This heavy construction is necessary, because railway motors require strong currents, and especially when the car is started; therefore, a lightly built controller would be liable to give out very soon. At the top of this controller two handles will be seen. The small one is the reversing handle, and the other the main controller handle.

Car controllers are made so that if one of the motors becomes disabled, it can be cut out of the circuit, and the car will then run with the remaining machine. Generally, the individual motor cut out is so made that another motor can be disconnected by the movement of a switch handle located either in the controller box, or at some accessible part of the car. The main controller handle, and also that of the reversing switch, when moved, rotate cylinders, upon which are contacts so arranged that they press against stationary contacts, and in different positions of the handle effect such combinations of the connections as are necessary to send the current through the motors in the proper order.

ELEVATOR MOTORS.

ELECTRIC motors have come into use very extensively for the operation of elevators. For this purpose shunt motors are used, not because a uniform velocity is required in this service, for such is not, as a rule, the case; but because the shunt motor, under almost every possible condition, is the safest. Elevators, when lifting a load, have to be driven by a source of power; but when the load is being lowered, it drives the elevator, unless the load is so light that it cannot overcome the friction of the machinery. Now a shunt wound motor, if driven at a speed slightly greater than its maximum velocity, will begin to act as a generator, and, therefore, absorb the power imparted to it by the descending elevator. From this it will be seen that a shunt wound motor will act as a brake when the elevator is on the down trip and thus prevent it from running away. Under these same conditions the series motor would not hold the elevator; it is on this account that series motors are not used for elevator work.

Most electric elevators are machines of the drum type, the motion of the motor being imparted to the drum by means of worm gearing. Figs. 3542 and 3543 show two designs of electric elevators made by Otis Brothers & Co. The first is a double screw machine, and the second a single screw. The former design is used

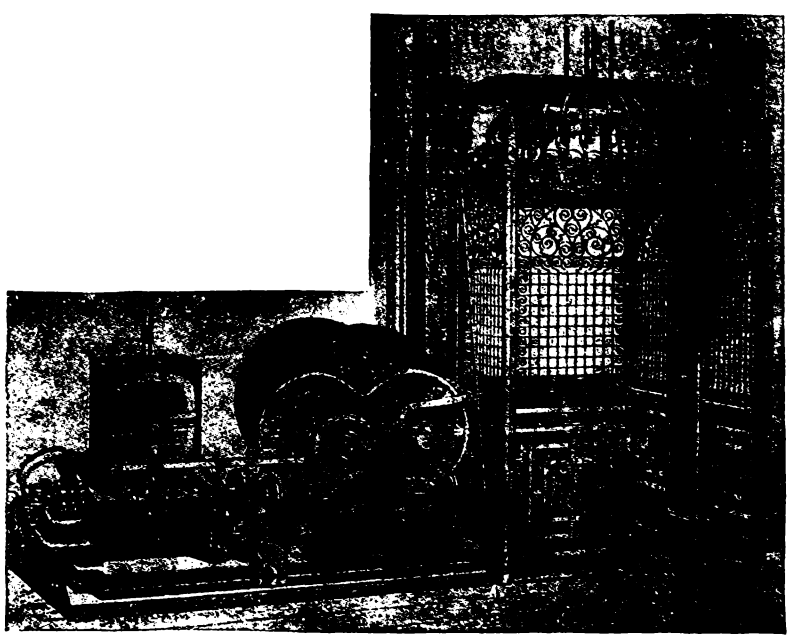

Fig. 3542.

to give additional safety, and is intended for high-class passenger elevators; while the second is used for smaller passenger elevators, and for freight machines.

Electric elevators are so arranged that the motion of the car is controlled, either by pulling a hand rope that passes through the car, as is common in other types of elevators, or by the movement of a wheel or lever which actuates this same rope, or by the manipulation of an electric switch. In the machines shown in the illustrations, the hand rope control is used, either with hand wheel or lever or with the plain rope. The starting switch is arranged so as to close the circuit with a resistance in series with the armature, just the same as the plain motor starter of Fig. 3531; but as the elevator operator cannot manipulate the starter handle directly, this is made so as to move automatically and cut out the armature resistance as the elevator car gains headway. The hand rope that moves the motor starter also controls a reversing switch which connects the motor so as to run in which ever direction may be necessary, and also actuates a brake, raising this when the elevator is started, and applying it as soon as a stop is made, thus preventing the car from running down when the current is cut off from the motor.

Figs. 3544 to 3547 show the Sprague elevator and some of its details. This machine, as will be seen, is not of the worm gear type. The principle of its construction can be best understood from Fig. 3545, in which it will be seen that there is a long screw, to one end of which the motor is attached, this being shown at the right-hand side. At the left side of the figure can be seen a set of sheaves that are held upon a stationary shaft journaled in a portion of the bed of the machine. Between these sheaves and the motor will be noticed another set of sheaves, and these are carried by a crosshead which contains a nut that runs upon the long screw. When the screw rotates in one direction the crosshead will travel in the direction of the motor, and if the screw rotation is reversed, the crosshead will travel away from the motor; thus the distance between the two sets of sheaves is increased or decreased. The ropes that lift the elevator car pass over these sheaves, and, as can be seen, the separation of the sheaves will raise the car, and when they come together the car will descend. In order to reduce the friction of the screw, it is made to run upon steel balls, the construction employed being well shown in Fig. 3546.

This elevator is controlled by the movement of a switch in the car, and the relation of the different parts of the apparatus employed therewith is well shown in Fig. 3547. Its operation is effected as follows: The car switch is connected with the small motor located to the left of the centre of the controller. This motor turns the controller handle, the direction of the latter depending upon the direction of rotation of the small motor. Now the car switch can be turned so as to make the controller motor rotate in either direction; hence, all that is necessary for the elevator operator to do is to turn the switch in the direction that will run the elevator up or down as may be desired.

Fig. 3548 shows the type of elevator made by the A. B. See Company, and in Fig. 3549 is shown the Morse, Williams & Co. electric elevator. Fig. 3550 shows the type of machine built by the Graves Elevator Company for passenger service, while Fig. 3551 is their freight elevator machine.

All these machines, it will be noticed, are of the drum type, and only differ from one another in the details of construction and, to a certain extent, in the general design. There is quite a difference, however, in the arrangement of the controlling devices; but the general principles upon which these are constructed will be explained in connection with the description of automatic motor starters.

Figs. 3552 and 3553 show two designs of plain hoisting machines with motors directly connected to them, as designed by the Crocker-Wheeler Company. In one of these, Fig. 3553, the motion of the machine is controlled by an electric controller which is similar in its construction to those used for railway purposes. In the other arrangement the machine is controlled mechanically by means of levers, as is clearly shown. In this arrangement the motor runs continuously, and the hoisting drum is stopped and started or reversed by the manipulation of the levers.

With machines of the type shown in Fig. 3552, series wound motors are used; but with those of the design of Fig. 3553, shunt wound motors are necessary, so that the motor may not run away when the load is taken off.

DIRECT CONNECTED MOTORS.—Within the past few years a great deal has been done in the way of connecting motors directly to the machines they are intended to operate, and in most cases this arrangement is very desirable. Its principal advantages are that the combined machine is more compact, cleaner, and, in most instances, less expensive to operate, as the friction of belting and shafting is saved. In Fig. 3554 is shown a direct connected ventilating fan and motor made by the Wagner Company. This is a

Fig. 3543.

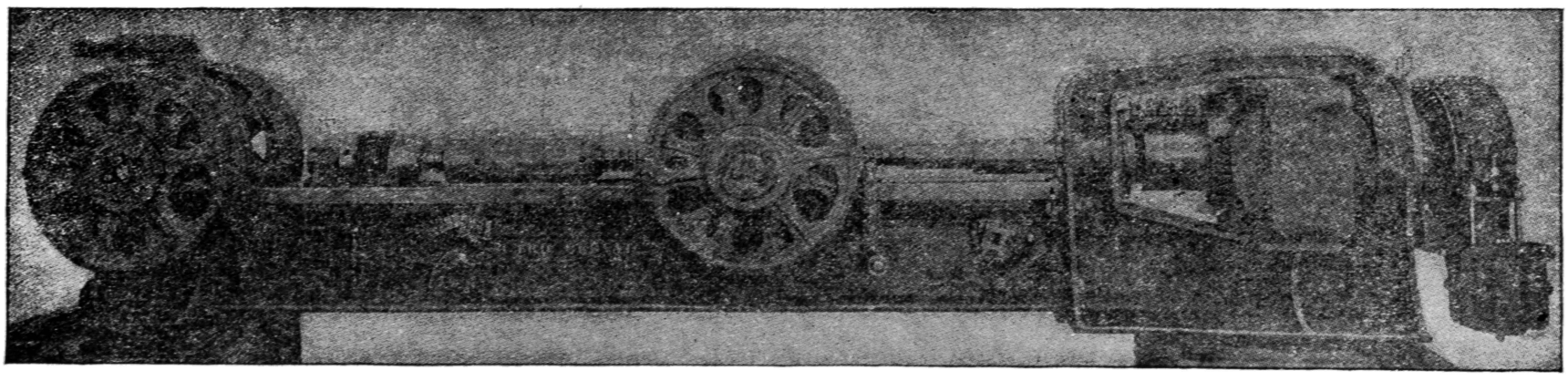

Fig. 3544.

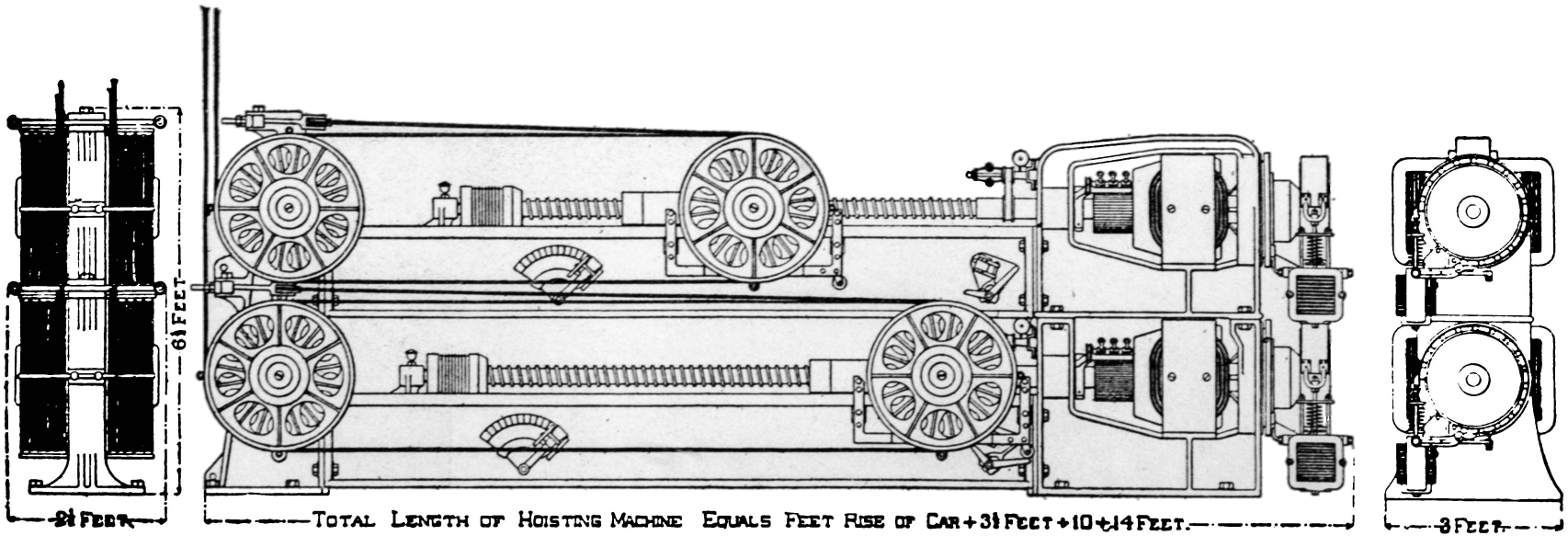

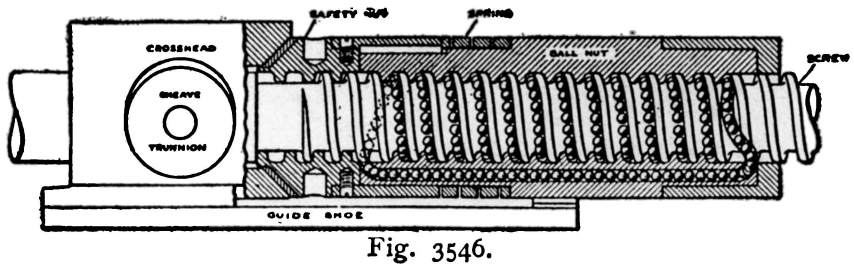

Fig. 3546.

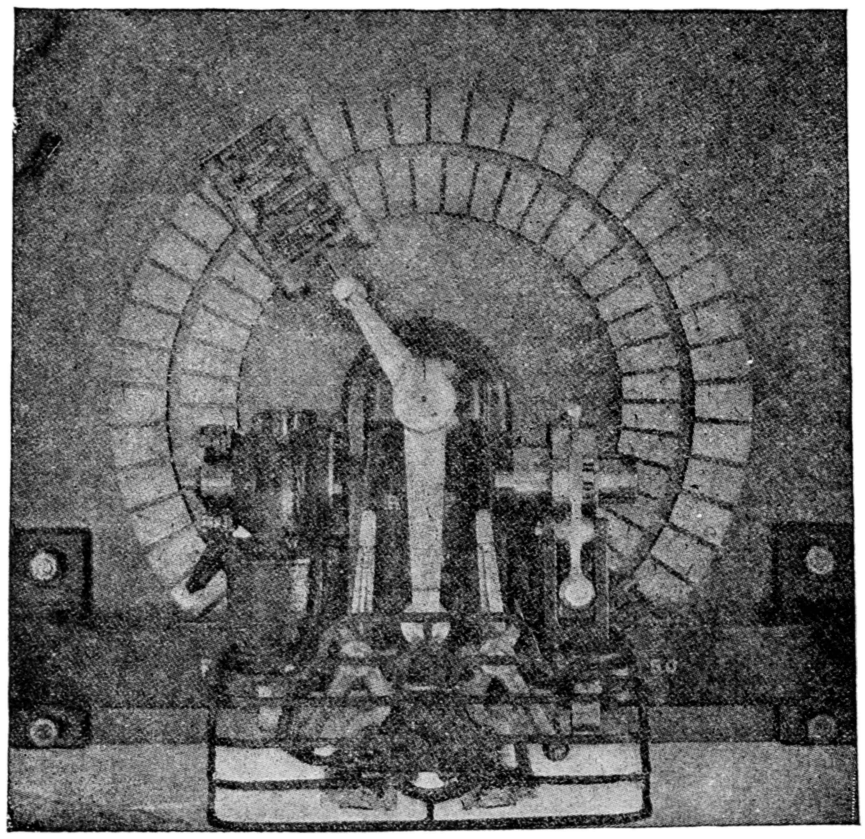

Fig. 3547.

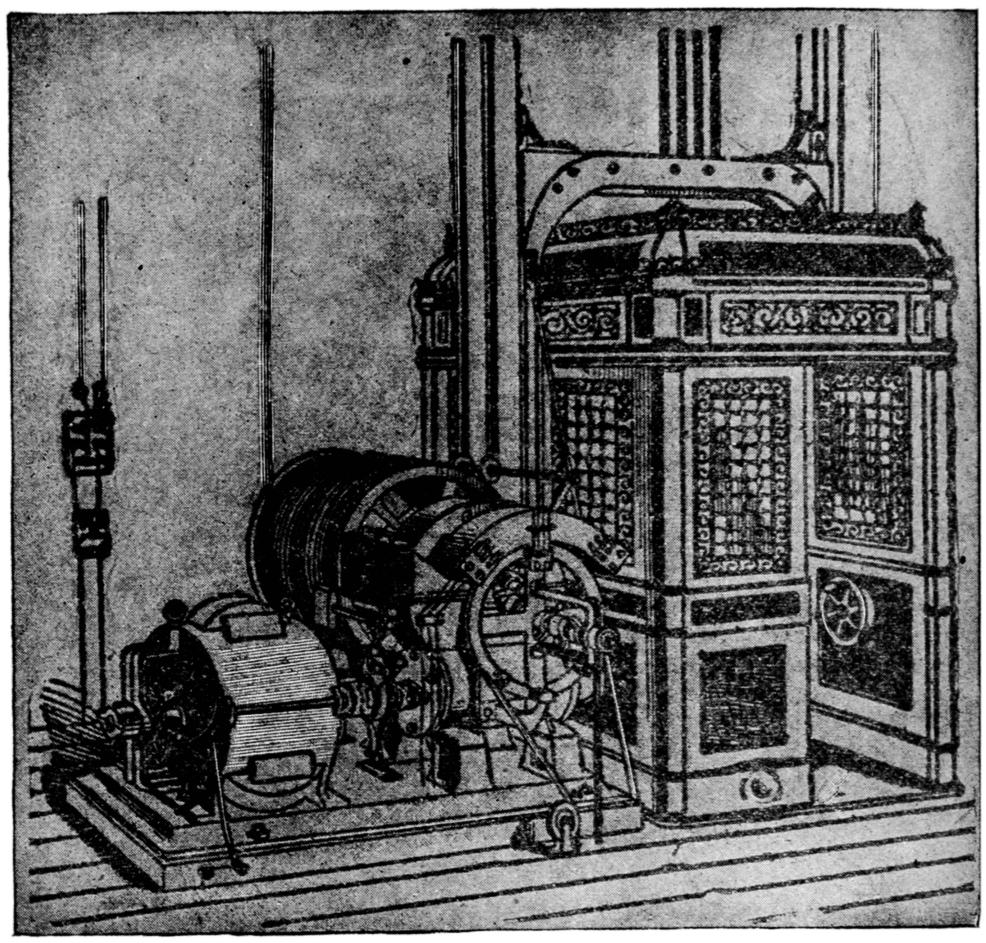

Fig. 3549.

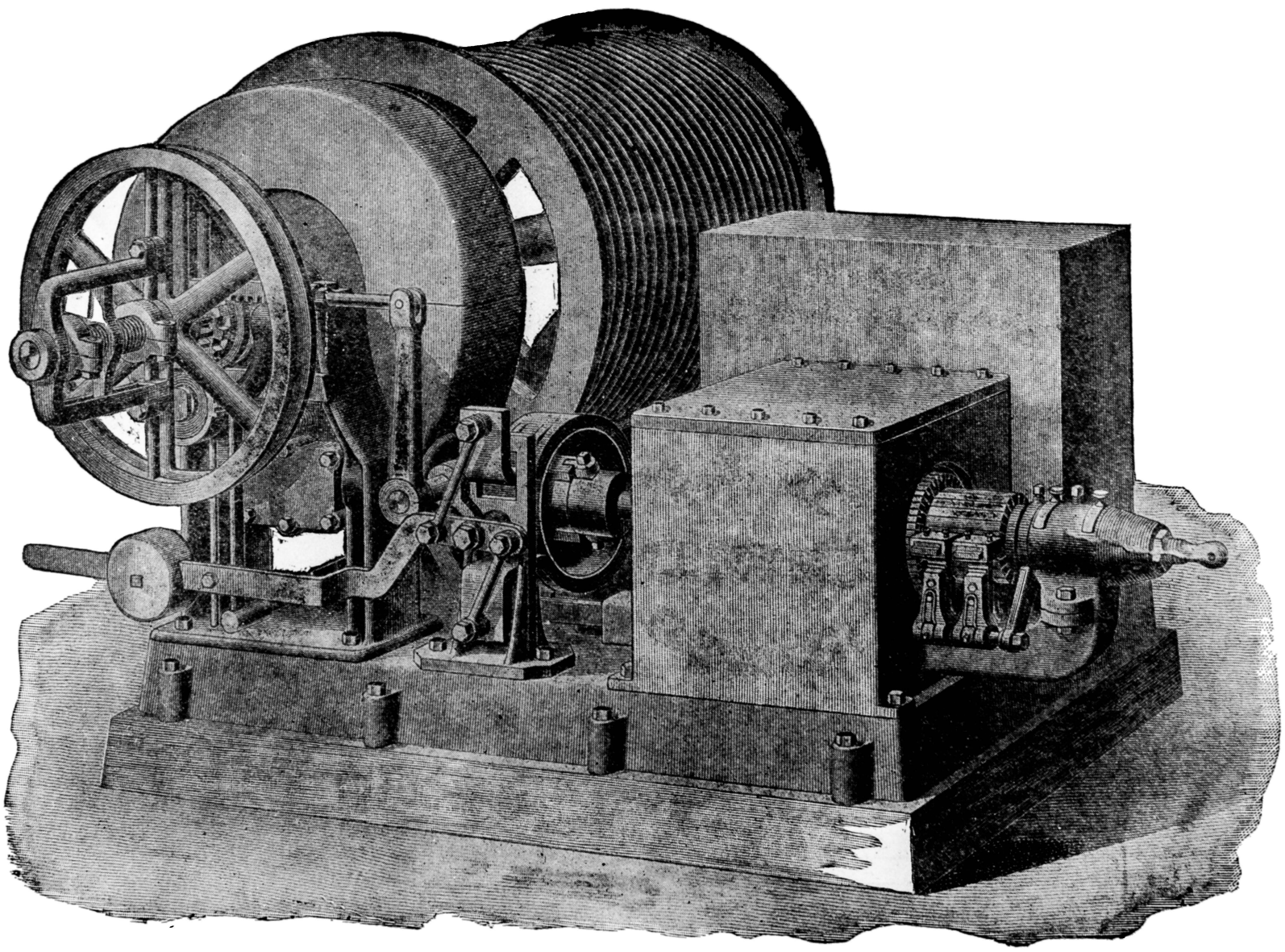

Fig. 3548.

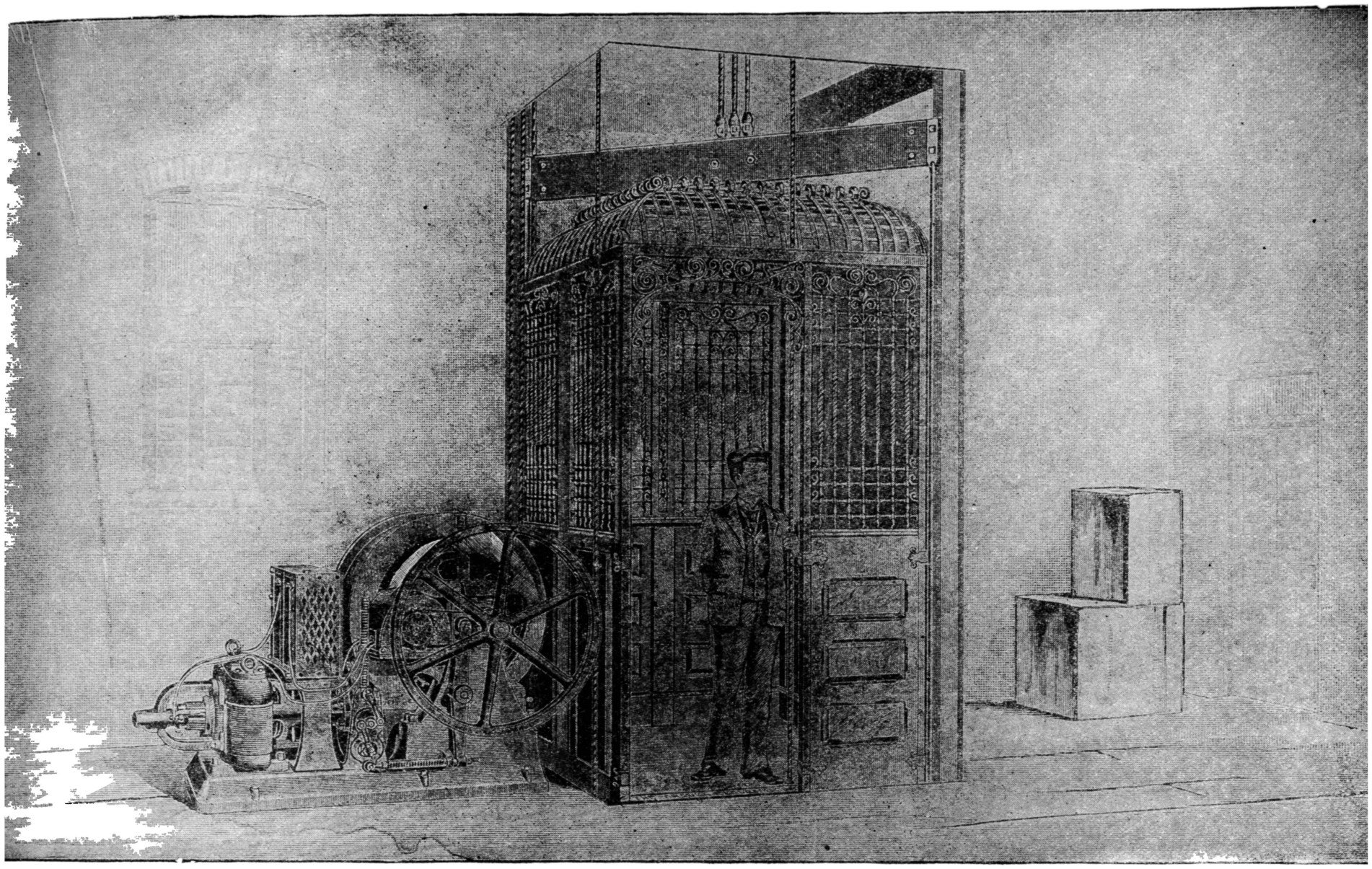

Fig. 3550.

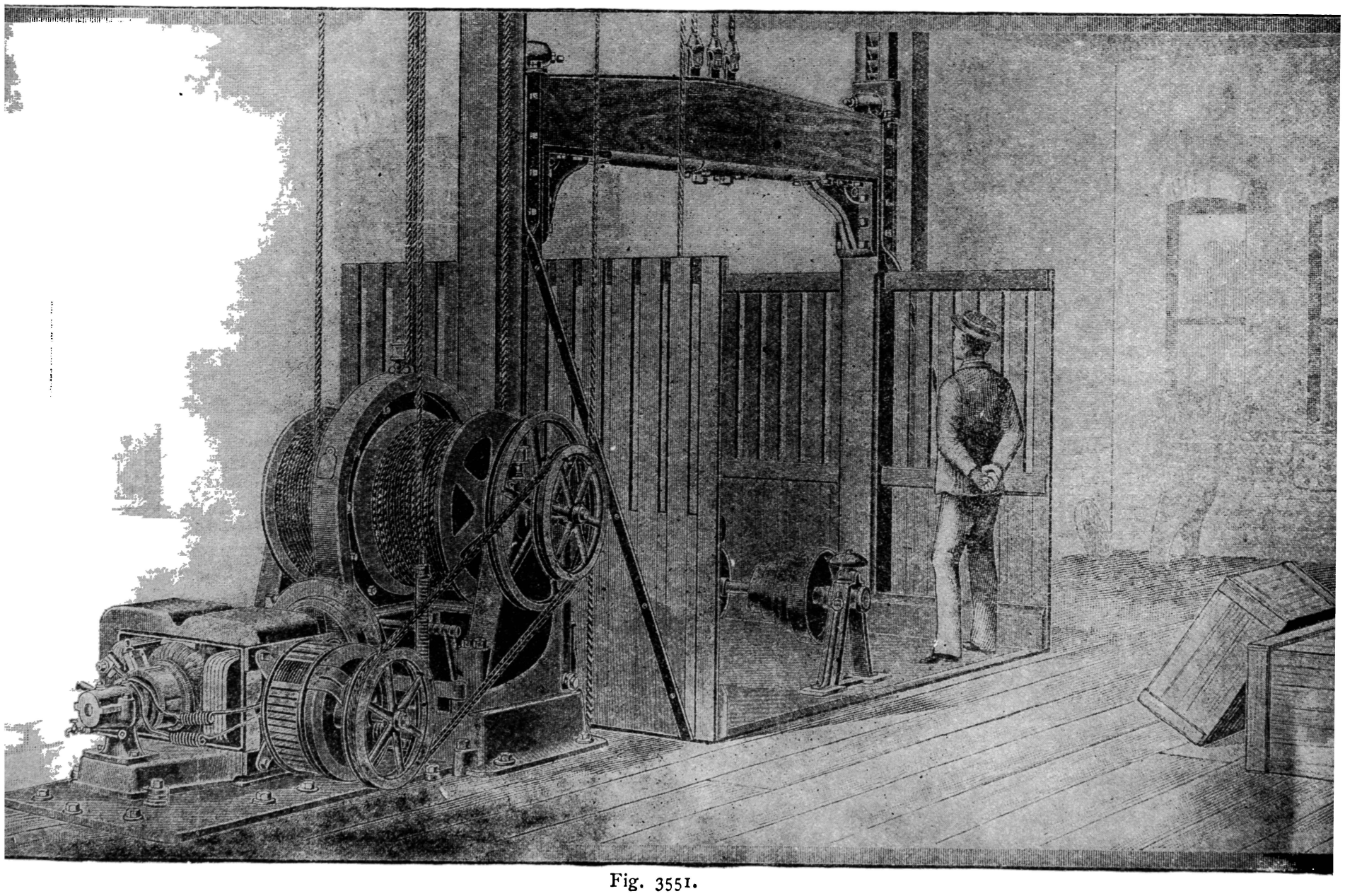

Fig. 3551.

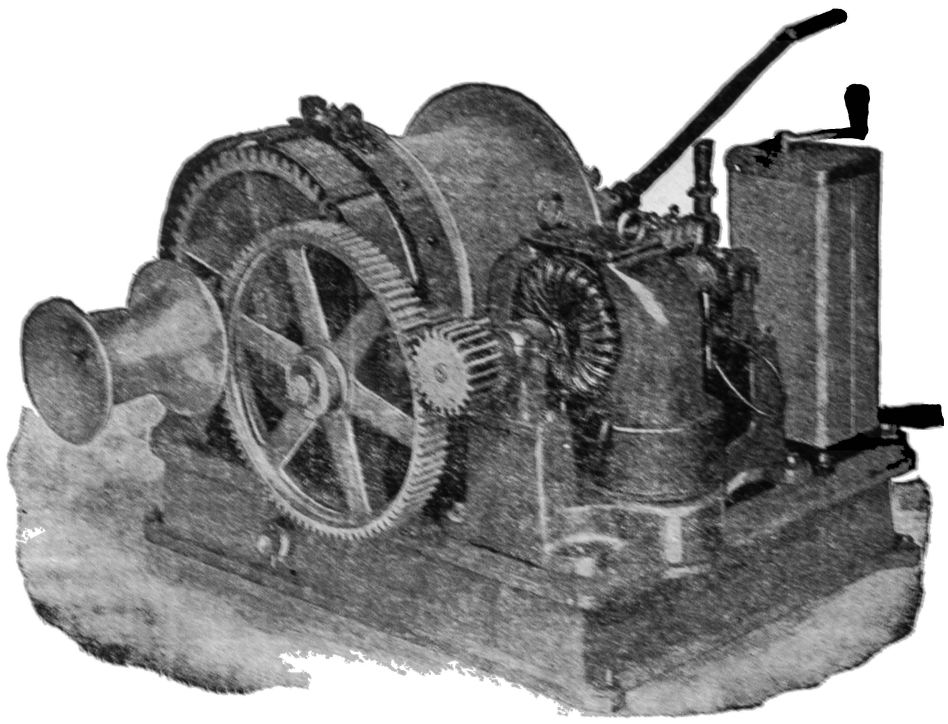

Fig. 3552.

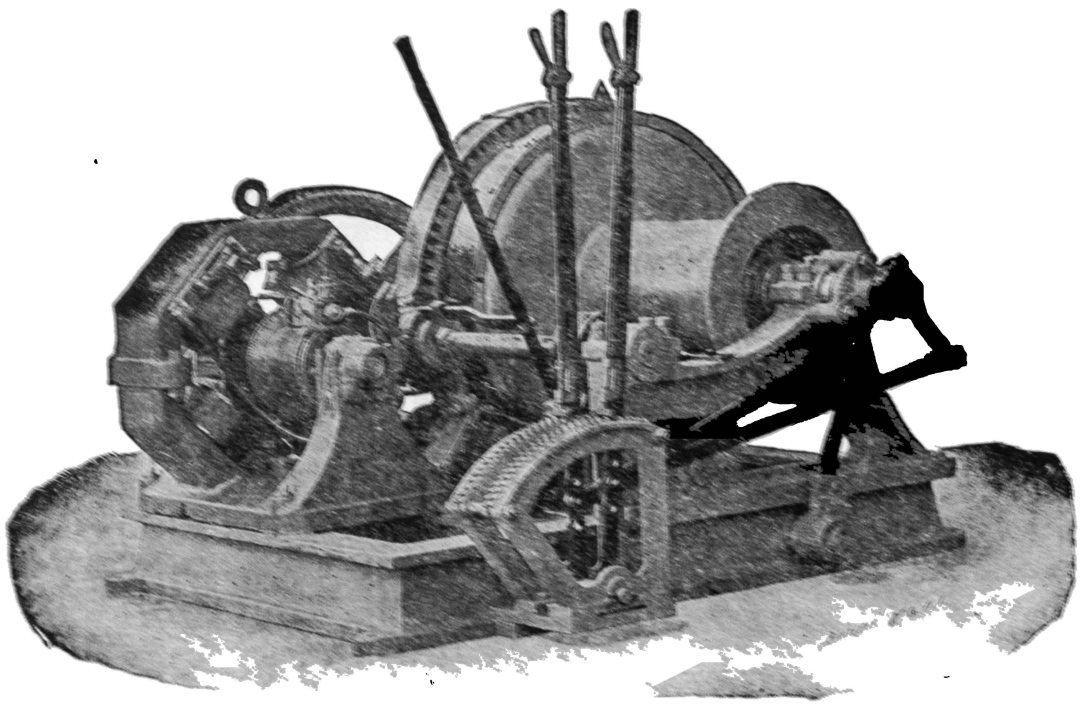

Fig. 3553.

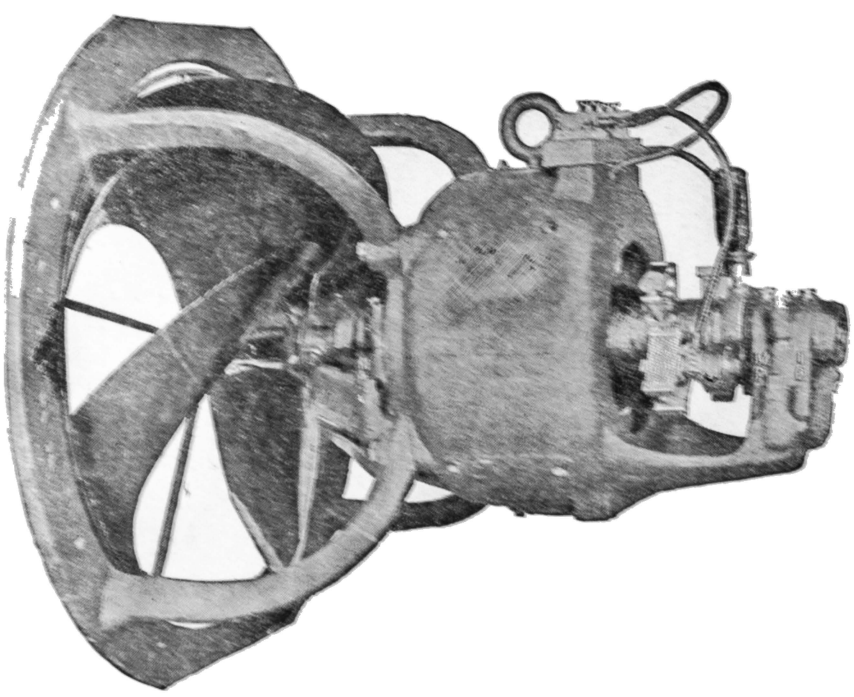

Fig. 3554.

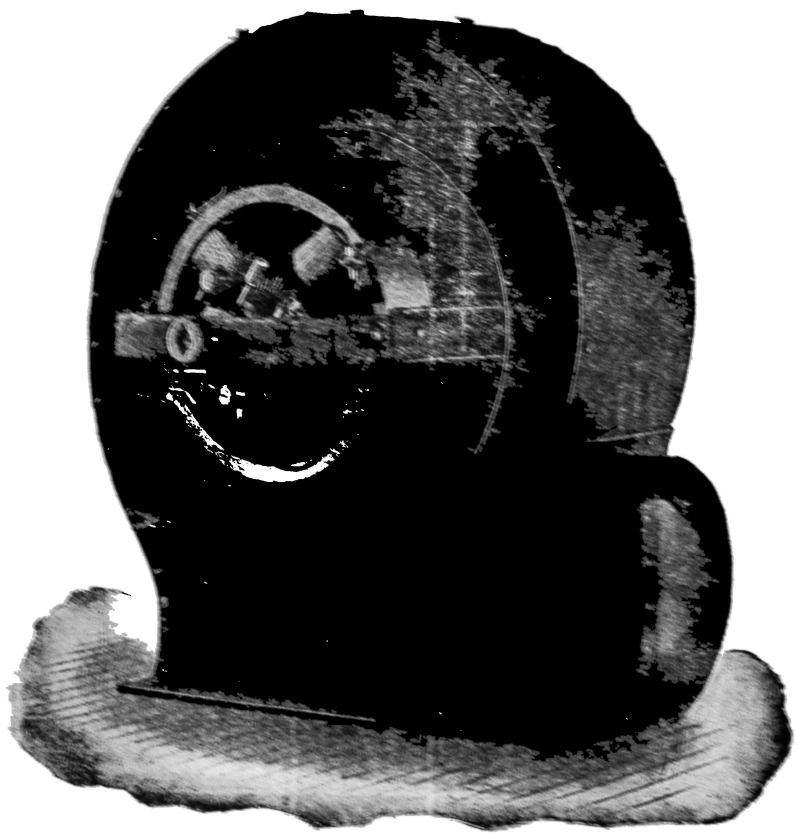

Fig. 3555.

type of machine used extensively for ventilating rooms such as kitchens, boiler rooms, etc. The fan is generally located opposite a hole in the wall or a window, and forces the foul air out of the room. Such a combination is not only neat and compact, but very effective, and requires little or no attention, as it is not liable to get out of order.

In Figs. 3555 and 3556 is shown a direct connected Sturtevant fan blower. The construction of this, as will be noticed, is not so open as that in Fig. 3554; this modification being due to the fact that the blower is intended for the purpose of forcing air through a suitable pipe for furnishing a blast in a foundry, or for similar purposes. The inlet of the fan is on the side opposite to that occupied by the motor, and, therefore, is not in the least obstructed. Fig. 3555 shows the motor with the casing removed, while in Fig. 3556 it is in place, with the trap-door at the top open so as to show how access to the interior is obtained for the purpose of cleaning or inspection.

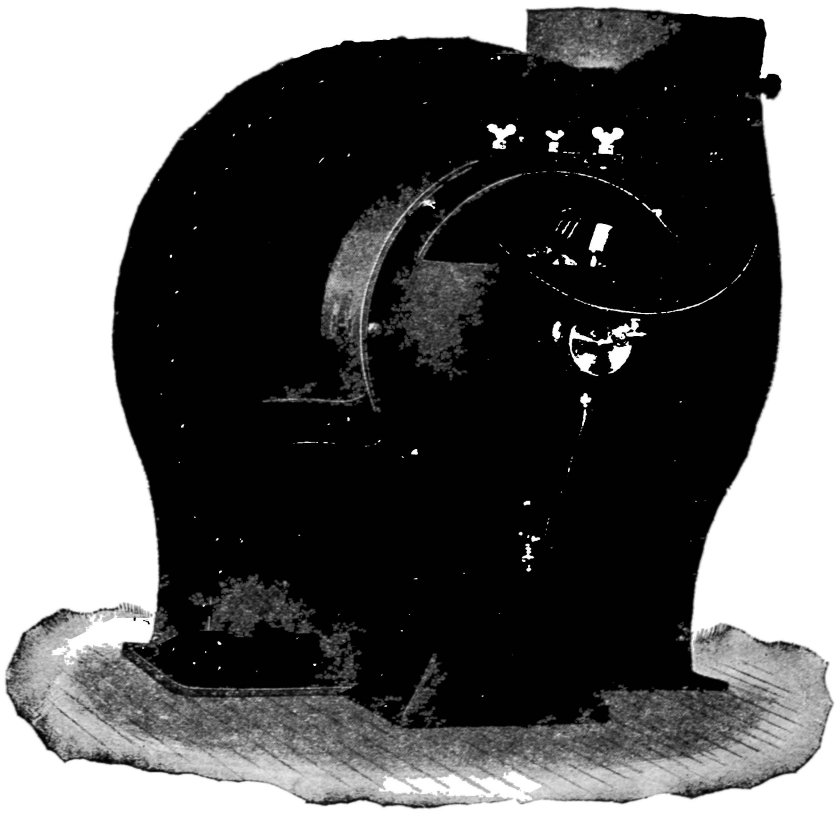

Fig. 3556.

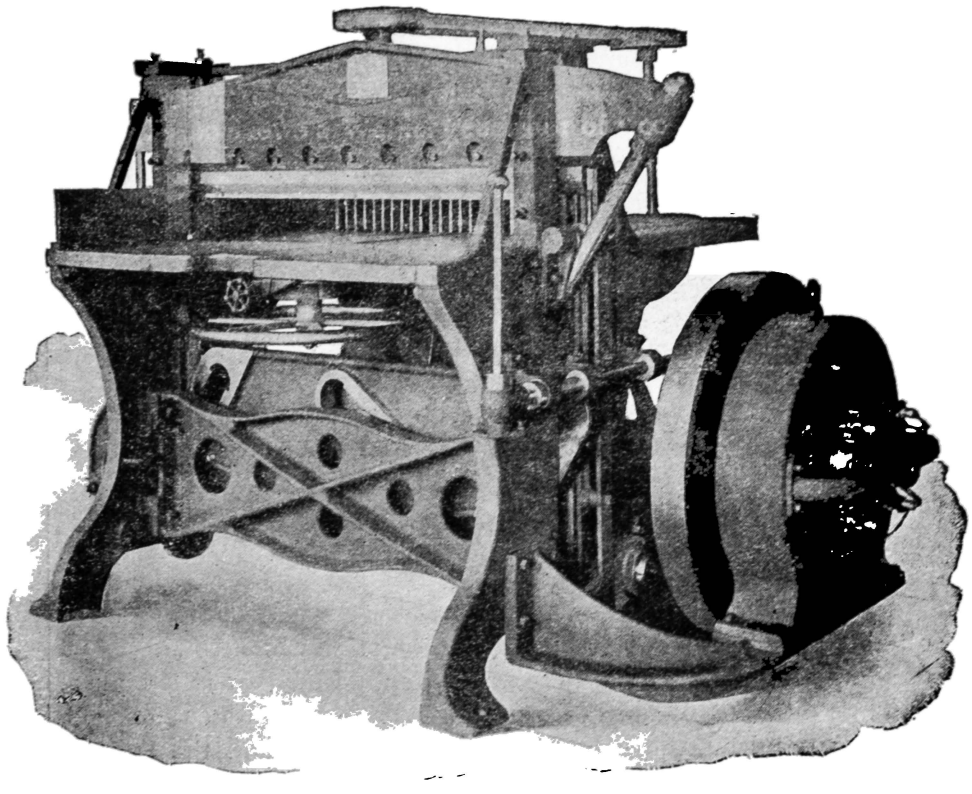

Fig. 3557.

Fig. 3557 shows a combination of a motor with a paper cutter, manufactured by the Thresher Electric Company, and Fig. 3558 is a combination of a printing press with a motor, made by the same firm. The compactness and neatness of this arrangement is apparent at the first glance.

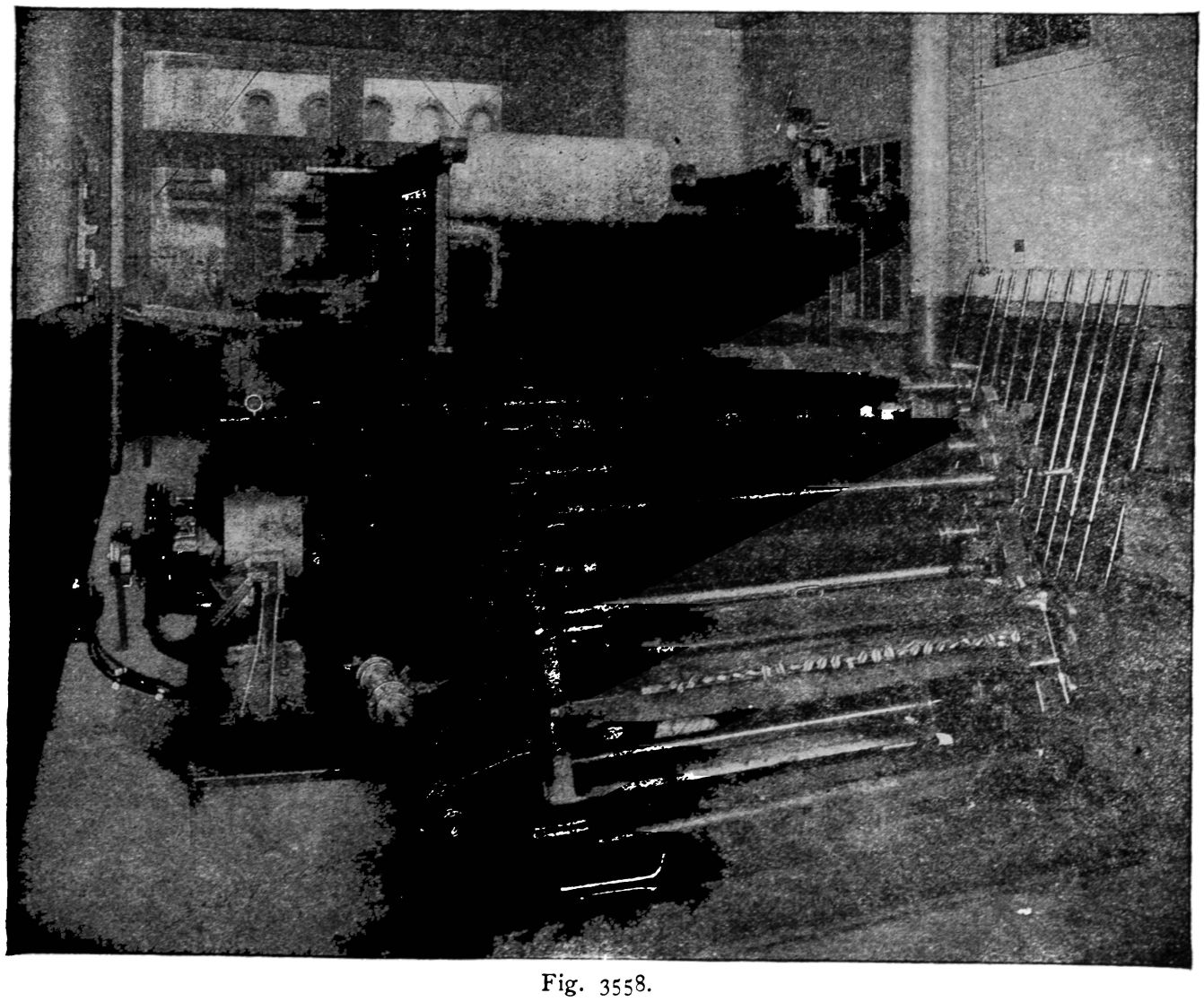

Fig. 3558.

Figs. 3559, 3560, and 3561 show three combinations manufactured by the Bullock Company. The first of these is an engine

lathe, the motor being located where the cone pulley is ordinarily placed. In this machine the different speeds are obtained by means of gear combinations, just as in any other lathe. The motion of the lathe is controlled by means of the device shown just under the motor, wires running from this to the carriage, so as to connect with a handle located where it can be conveniently manipulated by the operator.

Fig. 3560 is a drill press in which the speed changes are also

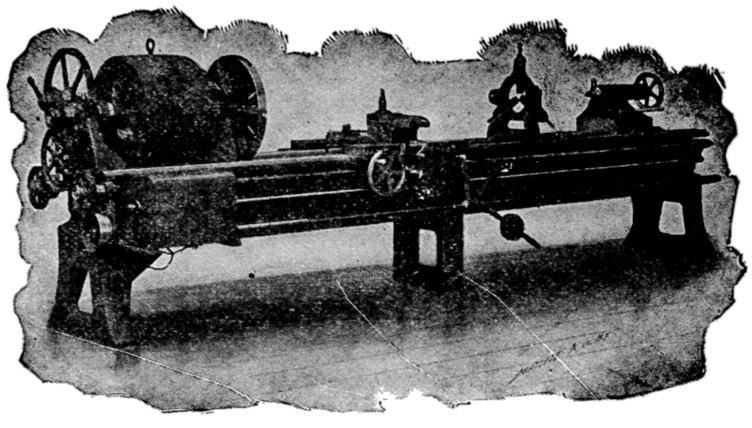

Fig. 3559.

obtained by means of gearing, and the motion is controlled, as in the lathe, by means of a suitable switch. Fig. 3561 is a boiler-maker's punch, and as in this kind of machine variations in speed are not required, the connection is very simple, and the motion can be controlled either by stopping and starting the motor, or by means of a clutch arranged to throw it in or out of gear. In the latter case the motor would have to be of the shunt wound type.

than likely that it will be carried too far in some directions. For machines that are to run at the same speed, or at slightly varying velocities, direct combinations are, undoubtedly, the best; but when great variations in speed are desired the advantage is not

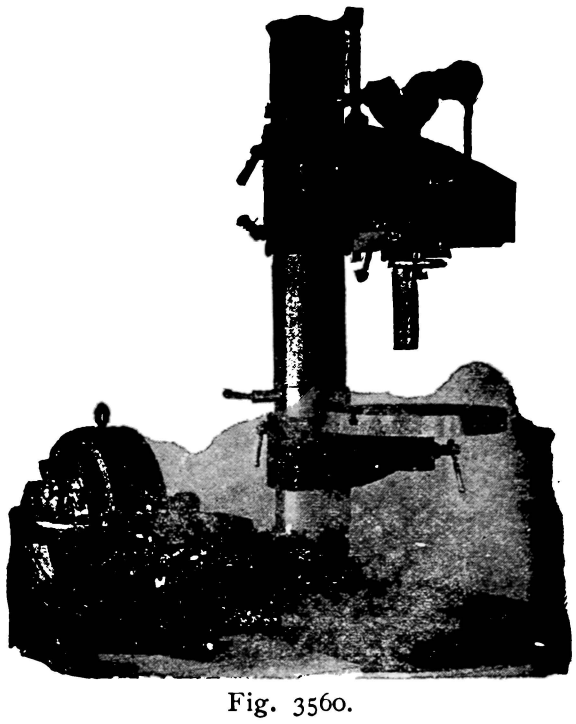

Fig. 3560.

apparent, unless it can be obtained without complicating the gearing.

ALTERNATING CURRENT MACHINERY.—Alternating current machinery of every kind is more simple in construction than that

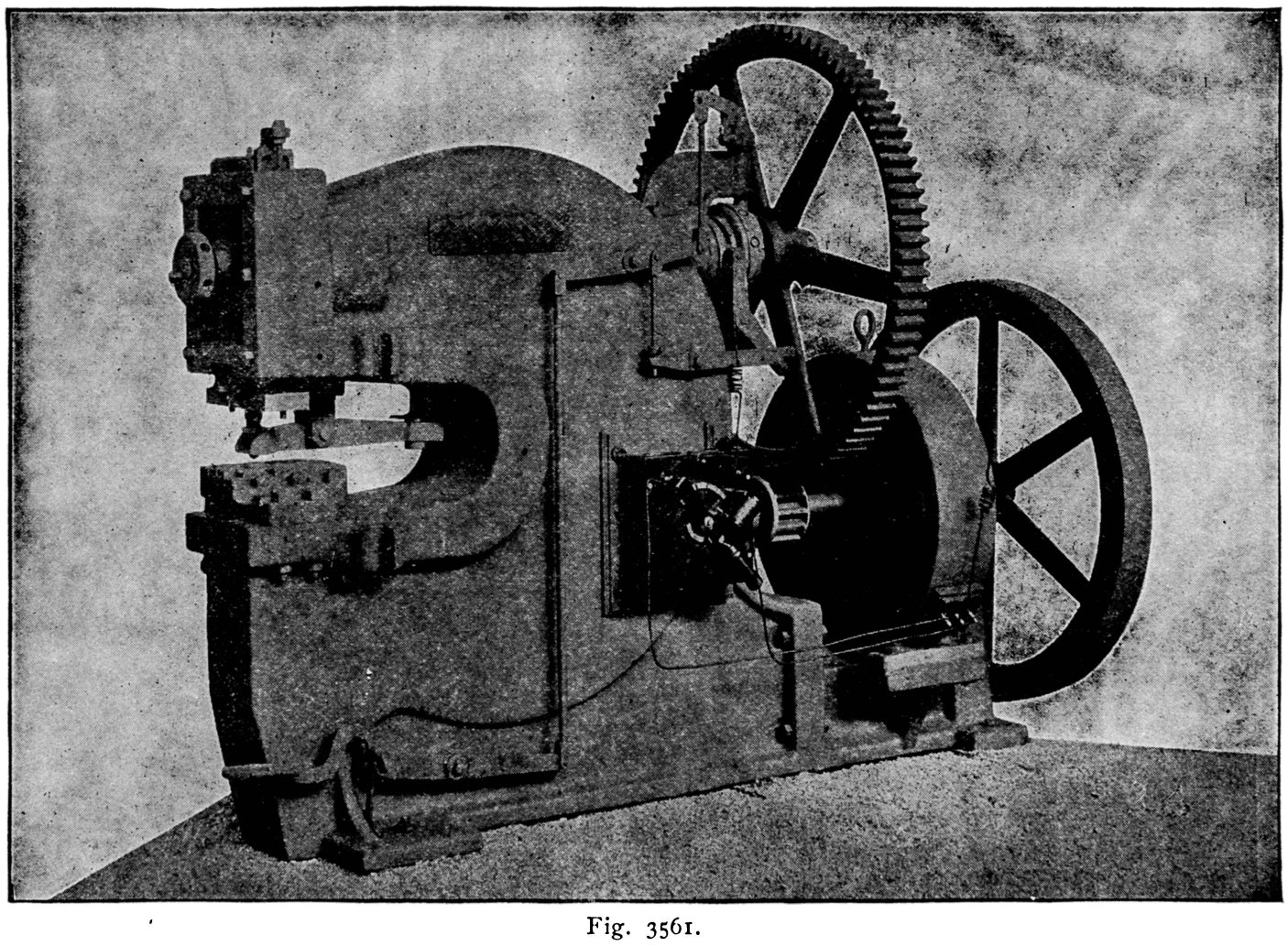

Fig. 3561.

In Fig. 3562 is shown a combination of a cold-saw cutting-off machine with a motor.

In Figs. 3563 and 3564 are given two examples of direct connected combinations made by the Crocker-Wheeler Company. The first is a large size horizontal boring mill, and the second a medium size drill press of the radial type.

As the direct connection of motors does away with the unsightly and, in some cases, dangerous belts, it is evident that such combinations will be largely increased in the near future; but such an arrangement is not advantageous in every case, and it is more

of the continuous current type, owing to the fact that the currents are used in the form in which they are generated; therefore no commutator is required. Although the construction of the machines is more simple, the principles upon which they act are not in every case so easily understood; the complication in this respect arising from the fact that the currents react upon themselves and thus produce effects that are not met with in the continuous current machines. To master the mysteries of alternating current actions well enough to be able to design such machinery accurately is difficult, but to obtain a sufficient knowledge of it to be

able to understand the operation of any device, is not, and this fact will become evident from what follows.

Suppose the diagram, Fig. 3565, represents a simple two-pole field with an armature rotating between its poles. Let this armature have a coil of wire A C wound upon it. Now from what has been said in relation to the induction of an electromotive force in a wire rotating in a magnetic field, it will at once be understood that in this coil a current will be developed—just the same, in fact, as in the armature of any generator. When the coil is in the position shown in the cut, the electromotive force will be zero, because then the wires are not cutting any lines of force; but when the armature has advanced one-quarter of a turn, the highest electromotive force will be developed, for in that position the wire will be cutting the lines of force at the highest rate. Suppose the rotation is in the direction of the hands of a clock. Then when the C side of the coil is in the position shown, the electromotive force will be zero, and when it advances one-quarter of a turn—that is, is at the nine o'clock point—the electromotive force will be the greatest. When one-half of a revolution has been made, and C is at the twelve o'clock point, the electromotive force will again be zero, for this is simply the reverse of the first position. When the rotation has advanced three-quarters of a revolution, and side C is at the three o'clock point, the electromotive force will again be the highest; but it will be oppositely directed, for now the wires are cutting through the lines of force in the opposite direction; that is, they are moving down instead of up. When the whole revolution is completed the electromotive force will again be zero. From this we see that each time the armature makes one turn the electromotive force rises from zero to a maximum value, then drops to zero again and then rises to a maximum value, but flowing in the opposite direction, and from this point once more drops to zero. Thus, in each revolution the electromotive force alternates from positive to negative. This operation is called one cycle of the current, and the number of cycles performed in a second will be equal to the number of revolutions made by the armature. This number of cycles in a second is called the frequency of the electromotive force. If the ends of the coil are connected to two insulated rings, mounted upon the

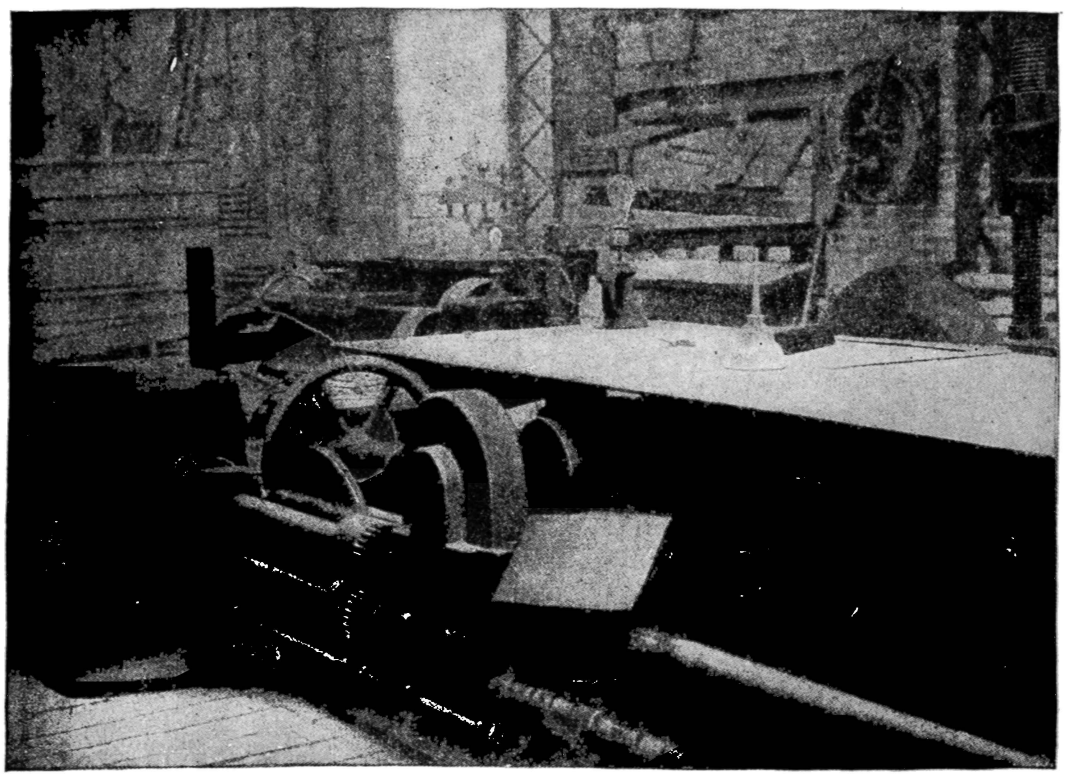

Fig. 3562.

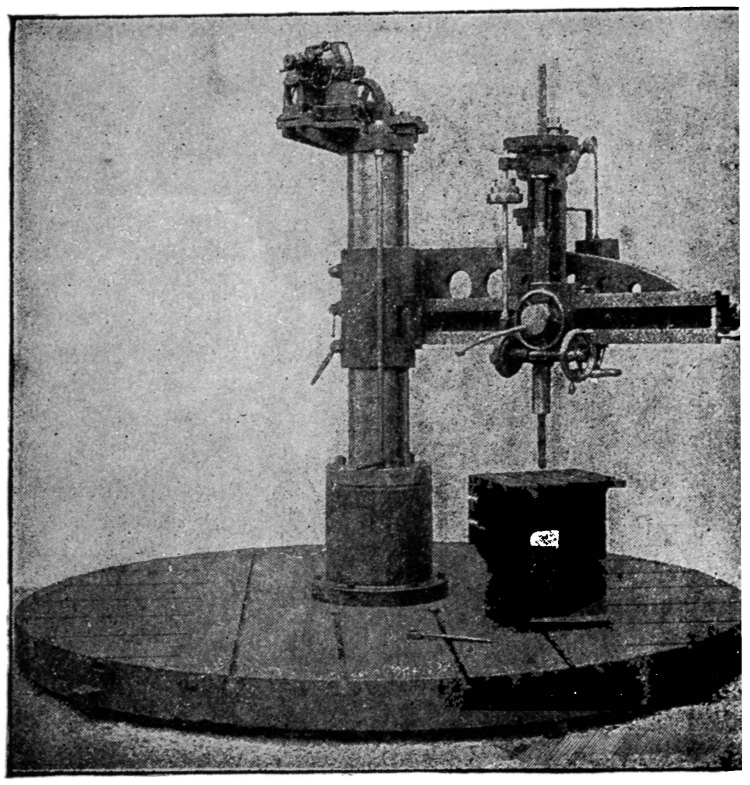

Fig. 3564.

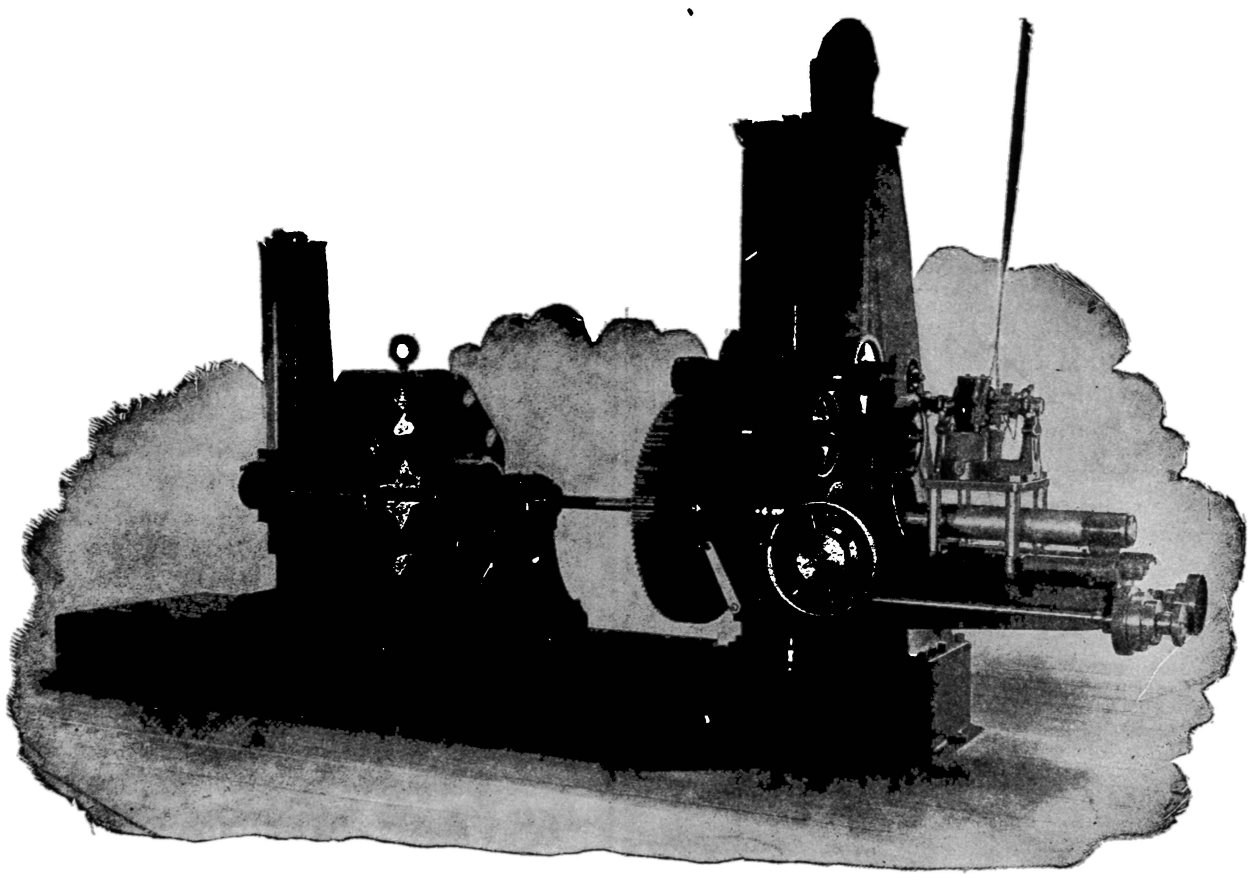

Fig. 3563.

shaft S, and brushes are arranged to press upon them, the electromotive force will cause a current to flow in the external circuit. This current will be of the alternating type. Now if we place another coil upon the armature, with its wires running at right angles to those of the first coil, a current can also be taken from it if its ends are connected with contact rings, the same as the first

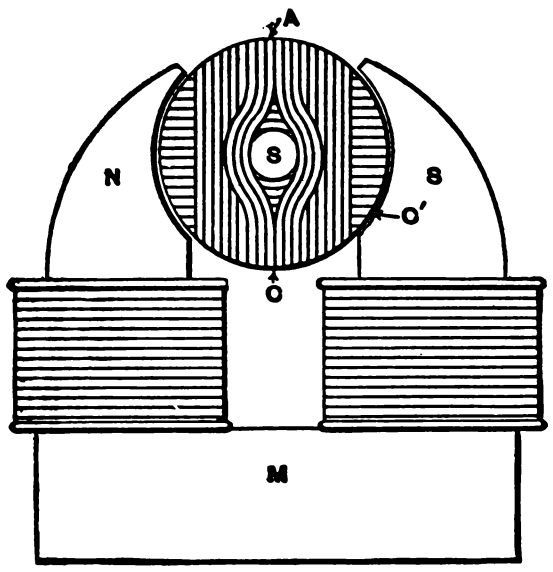

Fig. 3565.

coil. This second current will alternate at the same rate as the first; that is, they will both be of the same frequency, but they will not be in time with each other, for when one coil is in the position where the electromotive force developed in it is the greatest, the

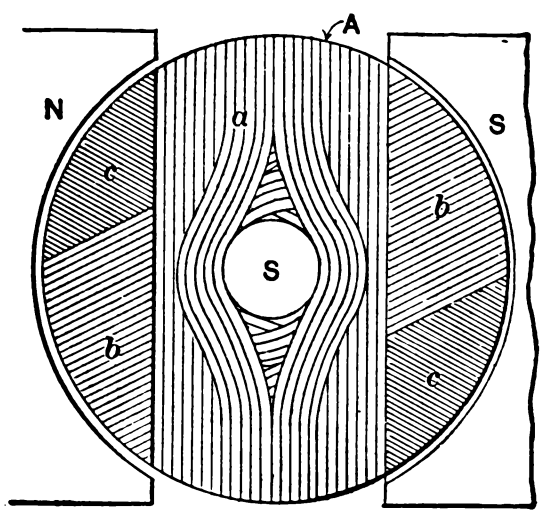

Fig. 3566.

other is in the position where the electromotive force is zero. From this we can see that in time one current will be behind the other by just as long an interval as is required for the armature to rotate one-quarter of a revolution. A generator that develops only one current is called an alternator, or a single-phase generator, and one that develops two currents out of time with each other by one-quarter of a cycle is called a two-phase generator, or simply a two-phaser.

If instead of winding two coils upon the armature at right angles to each other, we wind three coils and space these one-third of the circle apart, as is shown in the diagram Fig. 3566, then we will get three currents, and these will be out of time by one-third of a revolution, because the coils are spaced one-third of the circle apart. A generator that develops three currents out of time with each other by one-third of the revolution is called a three-phase generator or a three-phaser.

The frequency of alternating currents, such as are used in prac-

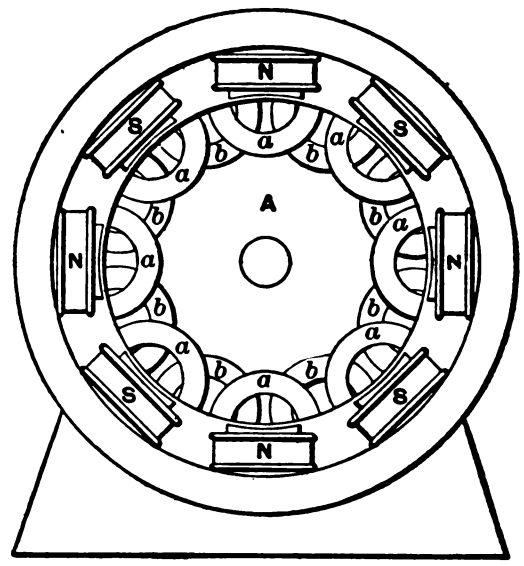

Fig. 3567.

tice, ranges from 30 per second up to as high as 140. Now as with a two-pole machine it requires one revolution of the armature for each cycle, such a machine would have to run at a velocity of 40 revolutions per second, or 2,400 per minute, to give the low frequency of 40; while for a frequency of 140 the velocity would have to be 8,400 revolutions per minute. This last velocity is entirely

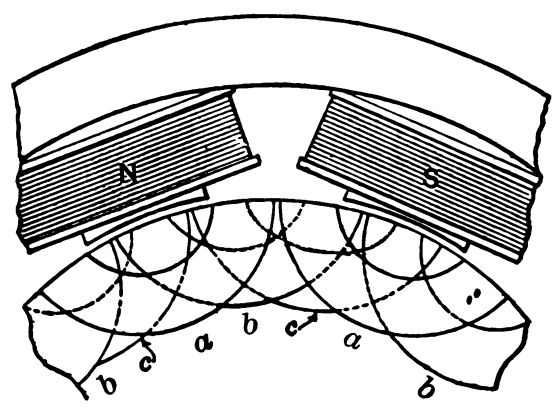

Fig. 3568.

too high for a machine of any size except the smallest; therefore, it becomes necessary to devise a design whereby the velocity may be reduced. This is accomplished by resorting to the multipolar construction. If the generator is made with four poles the speed is cut in two, and if it has eight poles the speed is reduced to one-

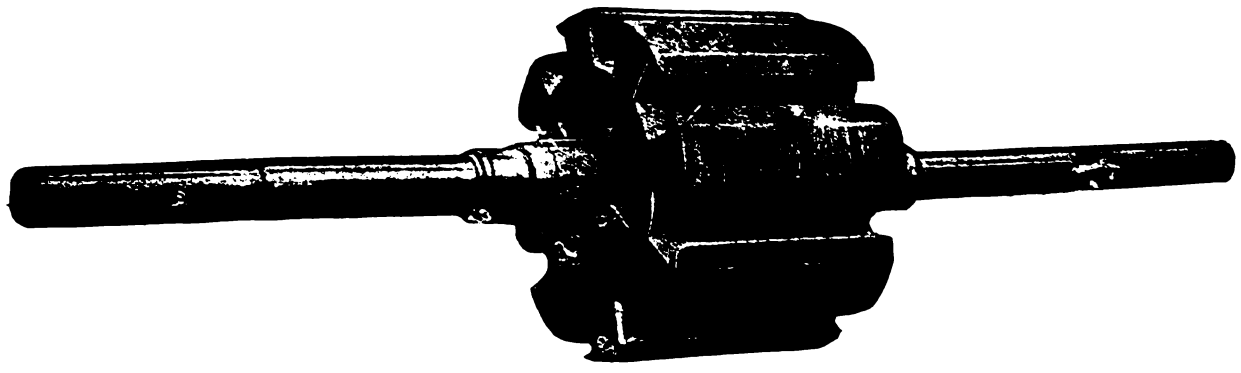

Fig. 3569.

quarter, for the same frequency. Thus an eight-pole generator would give a frequency of 8,400 at a velocity of 2,100 revolutions per minute, and a sixteen-pole generator would give the same frequency at 1,050 revolutions per minute. From this it will be seen that the lower the velocity at which it is desired to run the generator the greater the number of poles, and from the illustra-

tions that will be presently described, it will be found that this is the course that is actually followed in practice.

The manner in which the armature is made in multipolar ma-

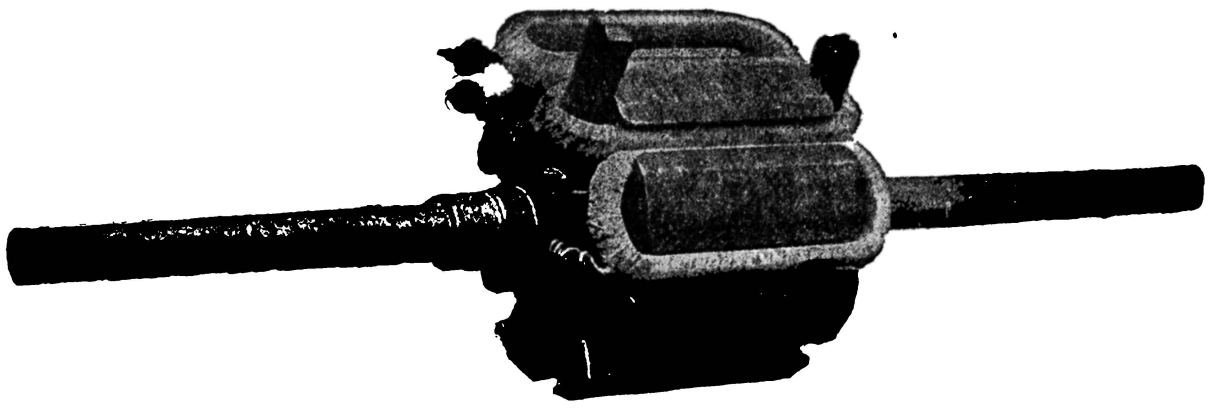

Fig. 3570.

chines, and the position and shape of the coils, can be understood from Fig. 3567, which represents, diagramatically, a two-phase generator of the eight-pole type, and also from Fig. 3568, which

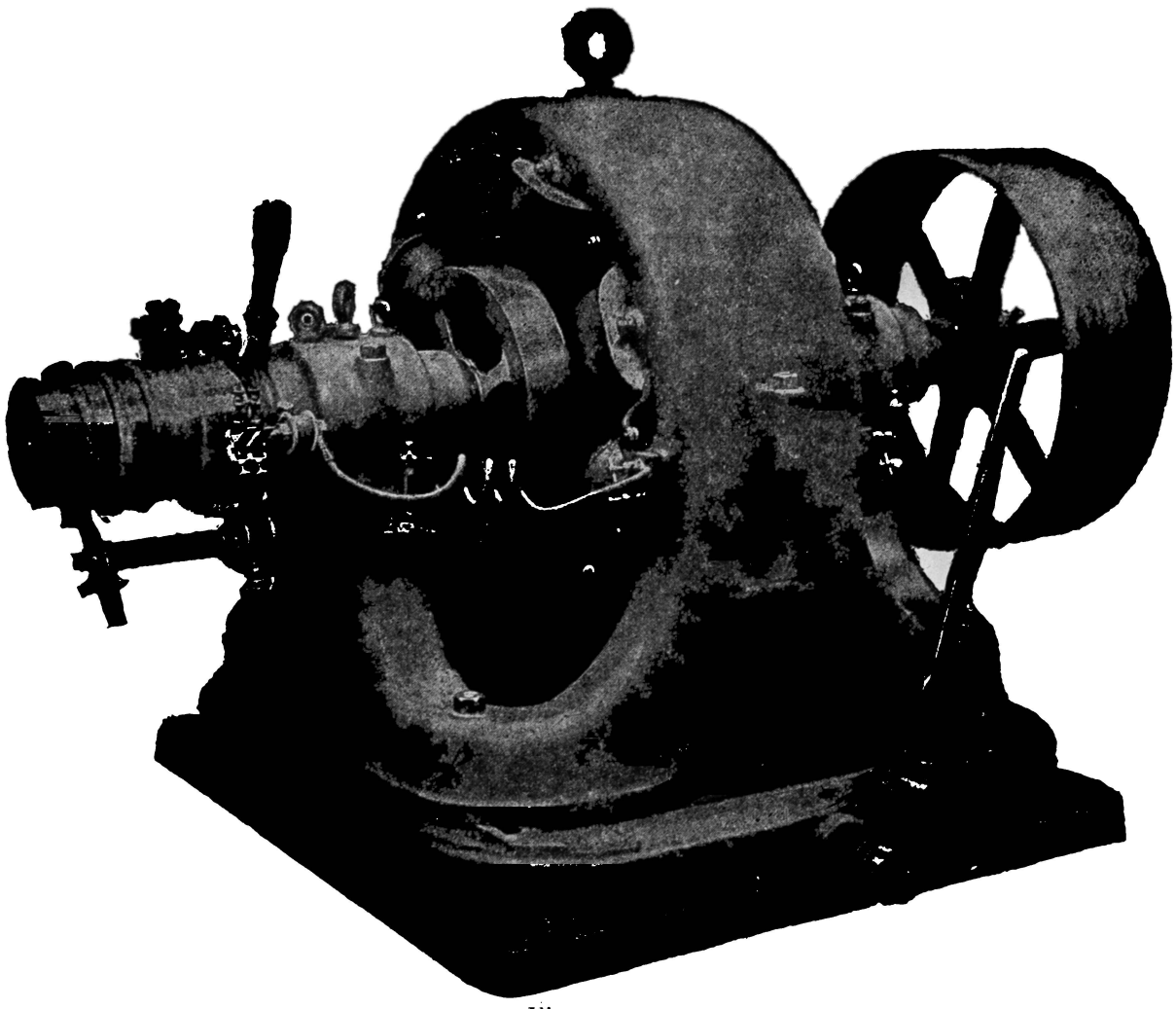

Fig. 3571.

shows a portion of the armature of a three-phase generator. Remembering that the adjoining poles in a multipolar generator form, in themselves, a complete machine, we can see that the

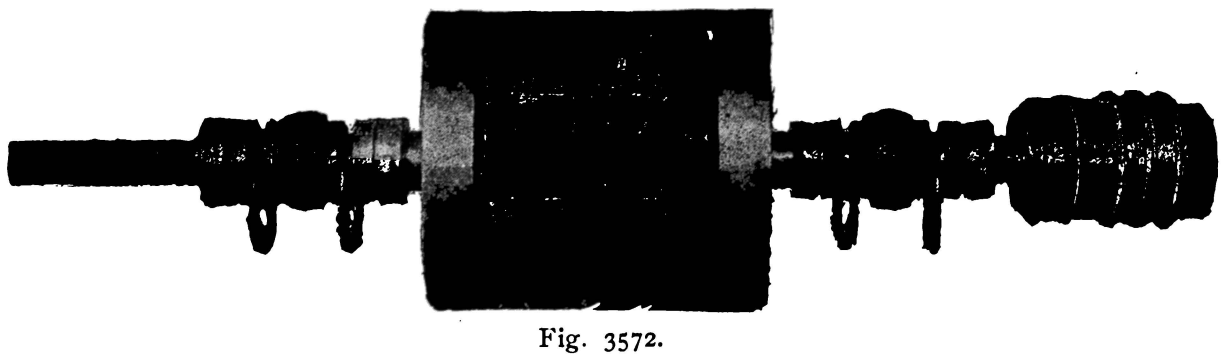

Fig. 3572.

coils must only span as much of the armature surface as the distance from one pole to the other, just as is the case with the coils of continuous current machines. In both Figs. 3567 and 3568 it will be seen that the distance from one side of a coil to the other is the same as from centre to centre of the pole pieced. In Fig. 3567 the coils marked *a* belong to one circuit, and those marked *b* to the other. In Fig. 3568 the three sets of coils are marked *a*, *b*, and *c*.

An alternating current machine cannot develop an electromotive force unless the field coils are supplied with a continuous current; for if an alternating current were used, the magnetism of the field would alternate, and there would be no current. There are two ways commonly used for exciting the field, as it is called; one is, to obtain a continuous current from another machine, which is called an exciter; and the other is, to pass a part

of the current generated in the armature through a commutator, and thus rectify it, and then use this for exciting the field. The machines made in this way are called self-excited. They are generally of small size. With large machines, the objection of providing a separate machine to excite the fields is not of much consequence, and it is considered best to use it, as then the complication of the commutator is avoided.

Figs. 3569, 3570, and 3571 show a small size alternator of the Westinghouse design. The first cut represents the armature core before the coils are put in place. In the second cut the manner in which the coils are mounted is shown, and in the last figure the complete machine is seen. This is a self-exciting alternator or single-phase generator. As will be noticed, at the end of the shaft there is a commutator next to the bearing, while at the outer end are located the rings from which the current is taken for the external circuit. This is an eight-pole machine. The brushes that take off the alternating current press in the grooves at the outer end of the cylindrical part shown at the end of the shaft. Only one of these brushes is seen, the other being back of the cylinder. The small brushes shown on the top and the front side near the bearing are the commutator brushes, which take off the current that passes to the field coils, the wire leading from one of these brushes to the field being plainly shown. Fig. 3572 shows the appearance of the completed armature.

Fig. 3573 shows the interior of a portion of the Niagara Falls power plant, in which are installed eight 5,000 horse-power Westinghouse two-phase generators. Three of these machines are seen in the illustration. As will be noticed, they are of the horizontal type, this construction being used so as to locate them directly upon the upper end of the turbine shaft.

Fig. 3574 shows a 900 horse-power two-phase Westinghouse generator.

Since all that is necessary to induce an electromotive force in a coil of wire is that it be made to cut across the lines of force of a magnetic field, it is evident that if the lines of force can be made to move, the coil may be kept stationary. Now it is not difficult to so construct a machine that the lines of force will move, and thus render it possible to obtain currents of electricity without having moving wires. Machines constructed to operate in this way are called induction generators. One way of accomplishing this result is to construct the field magnet in the form of a cylinder with a core in its centre. Such a magnet could be made out of a pulley having a web connecting the hub with the rim instead of arms. If in a pulley of such design we were to wind a coil around the hub, then the rim would form one pole of the magnet, and the end of the hub would form the other pole. If we now place a shaft within the pulley, making it small enough to revolve freely, and mount upon it a star-shaped flange, of such diameter that its ends will come close to the inner side of the pulley rim, then it is evident that if we rotate the shaft, while the pulley remains stationary, the lines of force passing out of the points of the star-shaped flange to the pulley rim will rotate with the shaft. If in the space between the ends of the star-shaped flange and the pulley rim we place coils of wire, the lines of force, in rotating with the star, will cut through the wires of the coils and thus induce electromotive forces in them. Thus we see that by this simple arrangement we can induce currents without having moving wires, for the coils in which the electromotive force is induced will be stationary, and the coil that magnetizes the pulley will also be stationary. The generators shown in Figs. 3575 and 3577 are constructed upon this principle, and are examples of machines of this type manufactured by the Westinghouse Company. Fig. 3576 shows the part of Fig. 3575 upon which the wire is placed, and, as can be seen, it represents the rim and a part of the web of the simple model just described. The revolving part forms the hub and the star-shaped flange. Fig. 3578 shows the revolving part of the machine illustrated in Fig. 3577, and from this the action of both Figs. 3577 and 3575 can be better understood. The revolving part of Fig. 3575 is substantially the same as that of Fig. 3577, while the stationary part of Fig. 3577 is

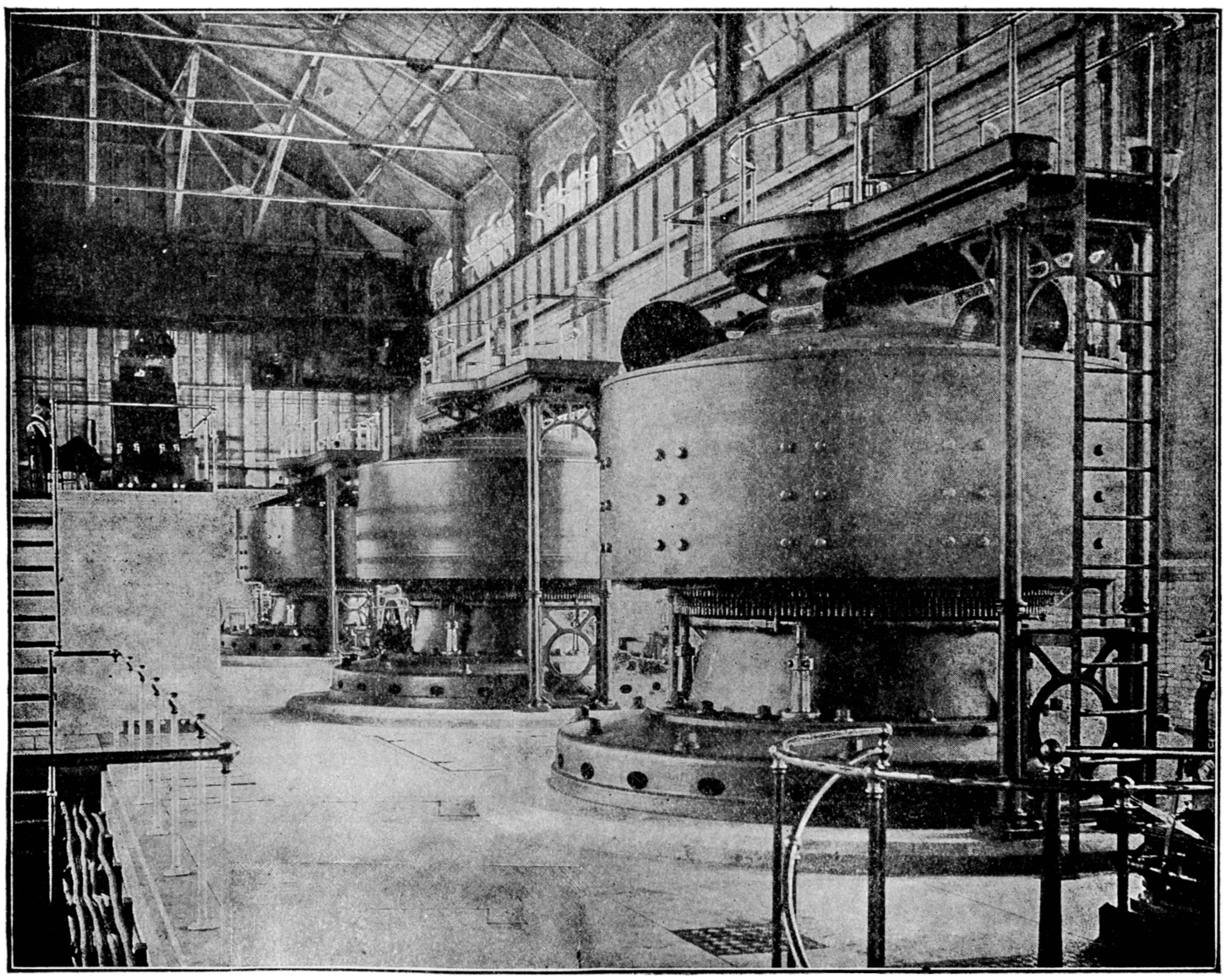

Fig. 3573.

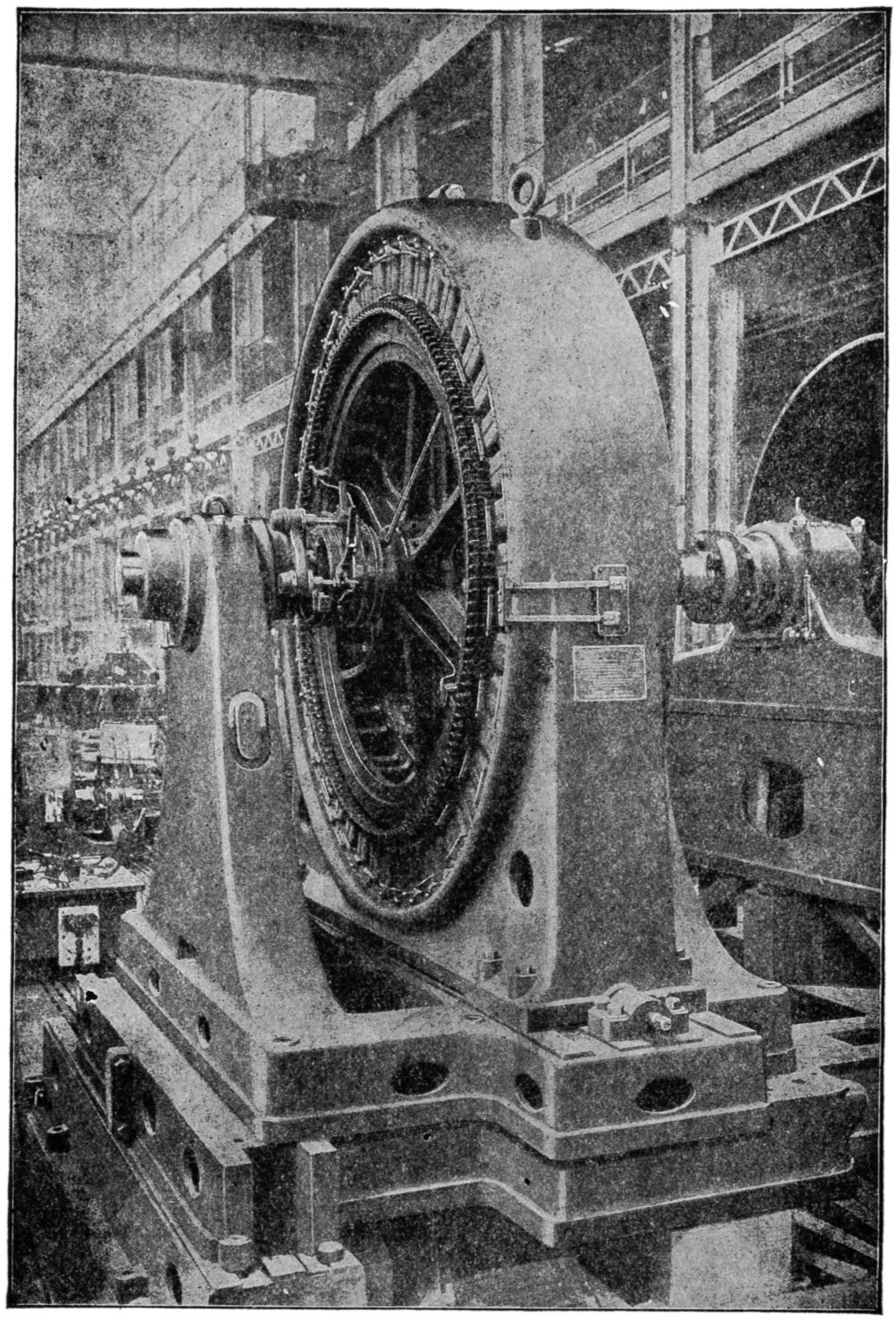

Fig. 3574.

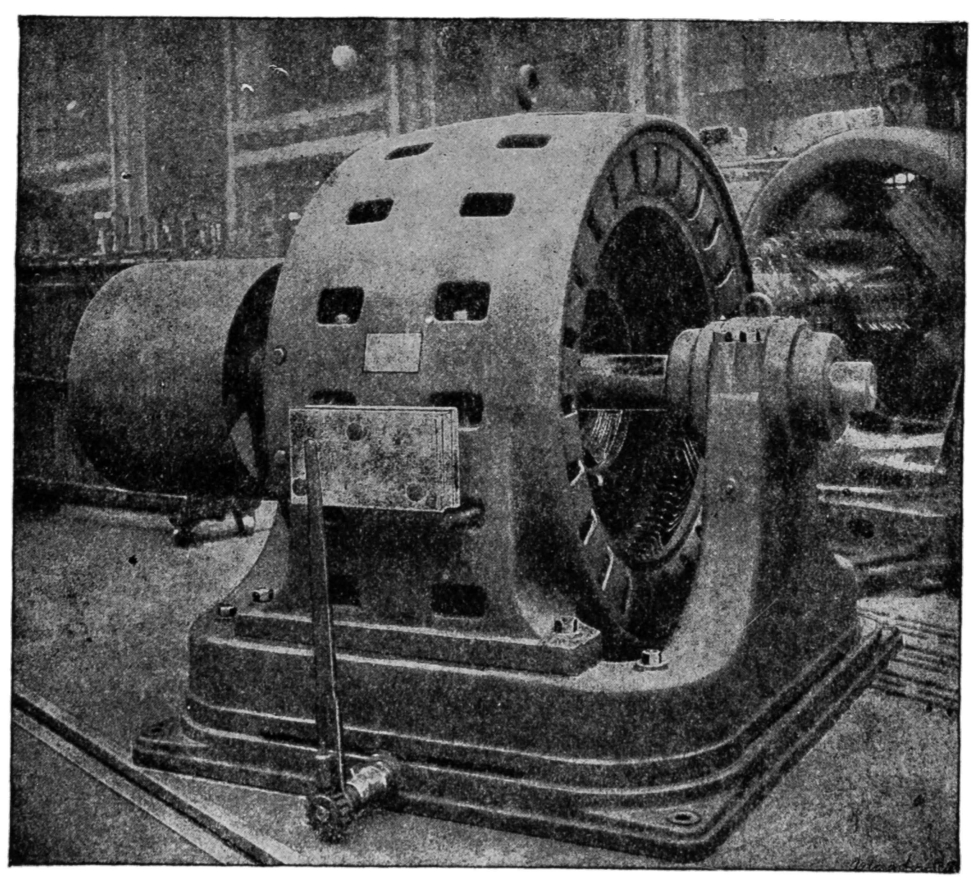

Fig. 3575

substantially the same as that of Fig. 3575. Now combining Fig. 3576 with Fig. 3578 we get the same construction, as already explained in connection with the pulley and the star-shaped flange; for Fig. 3576 takes the place of the rim of the pulley, and Fig. 3578 takes the place of the hub and the star-shaped flange. When Fig. 3578 revolves in the stationary part of Fig. 3577, the lines of force, issuing from the ends of the star, sweep over the stationary wire coils and induce an electromotive force therein.

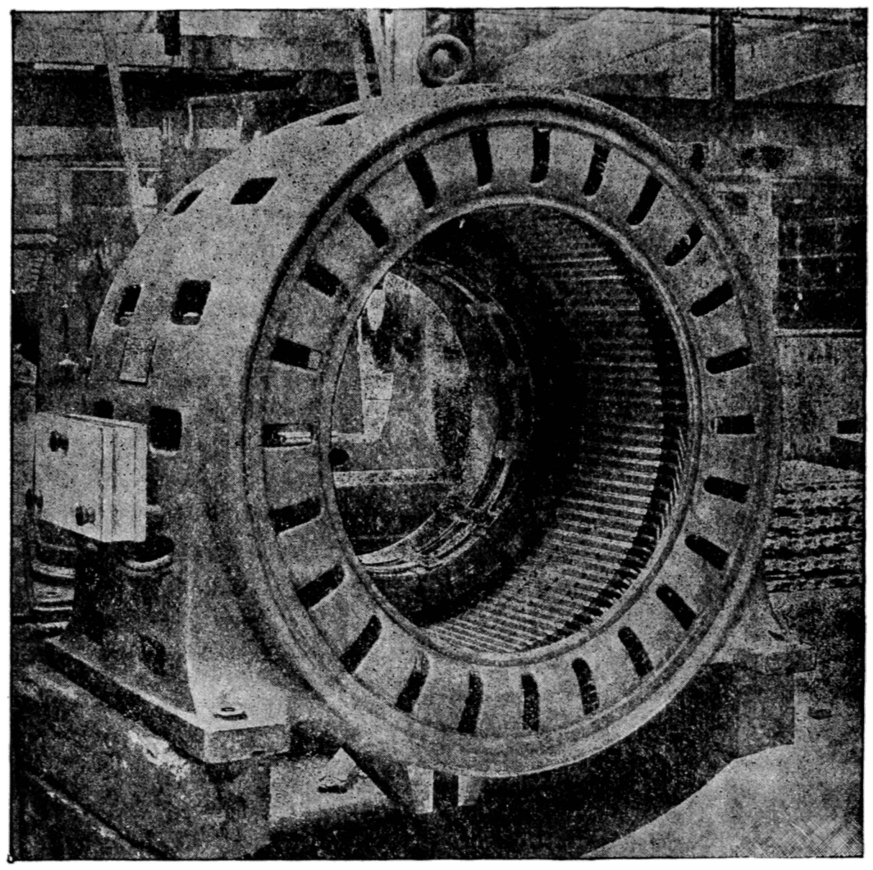

Fig. 3576.

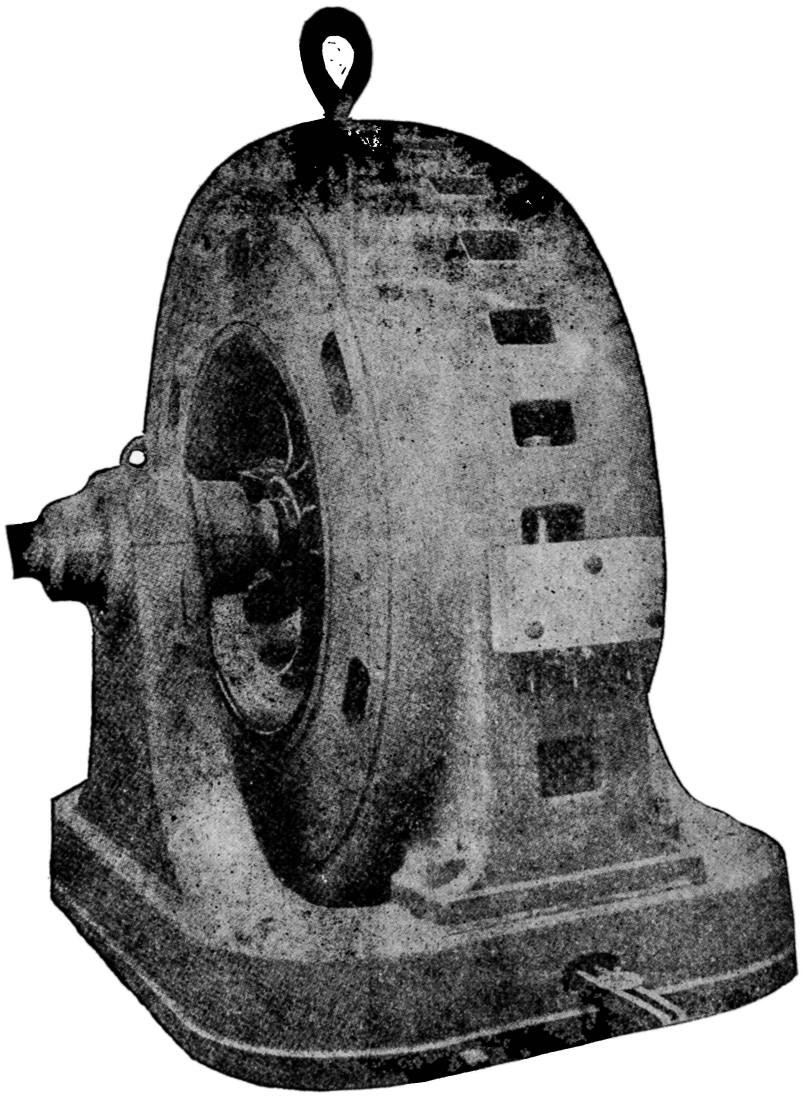

Fig. 3577.

Fig. 3579 shows a large Westinghouse induction generator, or rather the stationary part of such a machine. Its capacity is about 700 horse-power. From this illustration the manner in which the wire coils are wound can be readily seen.

Generators of this type can be made single-phase or multiphase, as desired. To make a multiphase generator, the coils of the different circuits are set so that the maximum electromotive force will be induced in them at the proper time, or else the rotating part is constructed so as to carry the lines of force over the different sets of coils one after the other.

With these machines, as with the armature type of alternators, it is necessary to have a continuous current to magnetize the field magnet, and the methods employed to obtain it are the same; that is, it is derived from the main current by means of a commutator, or from an independent exciter.

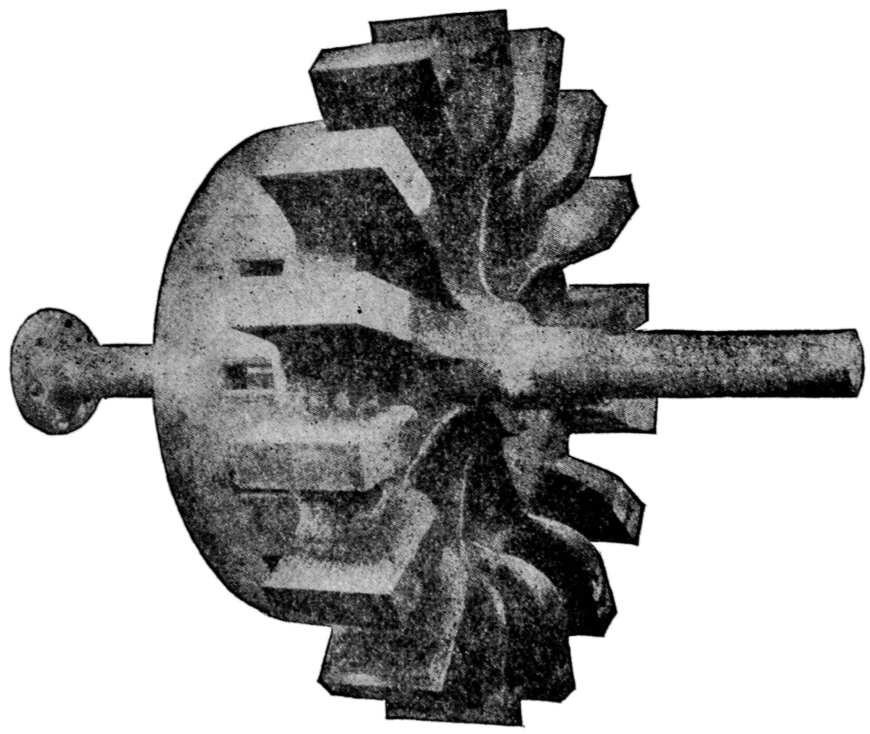

Fig. 3578.

Fig. 3580 shows a design of induction generator made by the Warren Electric Company, and, as will be noticed, the base of the machine is made so as to accommodate the exciter which generates the field current. From this illustration a fair idea can be obtained of the amount of current required to magnetize the field, this being about proportional to the size of the exciter. The re-

volving part of this generator is shown in Fig. 3581. The principle involved in the design of this machine and those of the Westinghouse make illustrated in Figs. 3575 and 3577 is the same, but there is quite a difference in the details of construction.

If it is desired to make an induction generator for a slow velocity, the number of points in the star-shaped revolving part are increased, and to increase the velocity they are reduced. In any case, the number of stationary coils in which the currents are generated must agree with the number of points on the revolving part, and they must be of the same pitch; that is, they must cover the same portion of the circumference of the circle.

In Fig. 3582 is shown a different type of generator from those obtained by connecting with the ends of stationary wires. In the revolving field generators only the main current can be carried off without sliding contacts; the field current must be supplied through collecting rings and sliding contacts, from the fact that the field coils revolve.

In Fig. 3584 is shown a single-phase or simple alternator of the type manufactured by the Fort Wayne Company. This machine is the simple type with the rotating armature, and provided with collector rings to carry the current to the external circuit. The field is excited by a separate exciter, which is shown belted to the end of the generator shaft.

The machine shown in Fig. 3585 is a large size revolving field

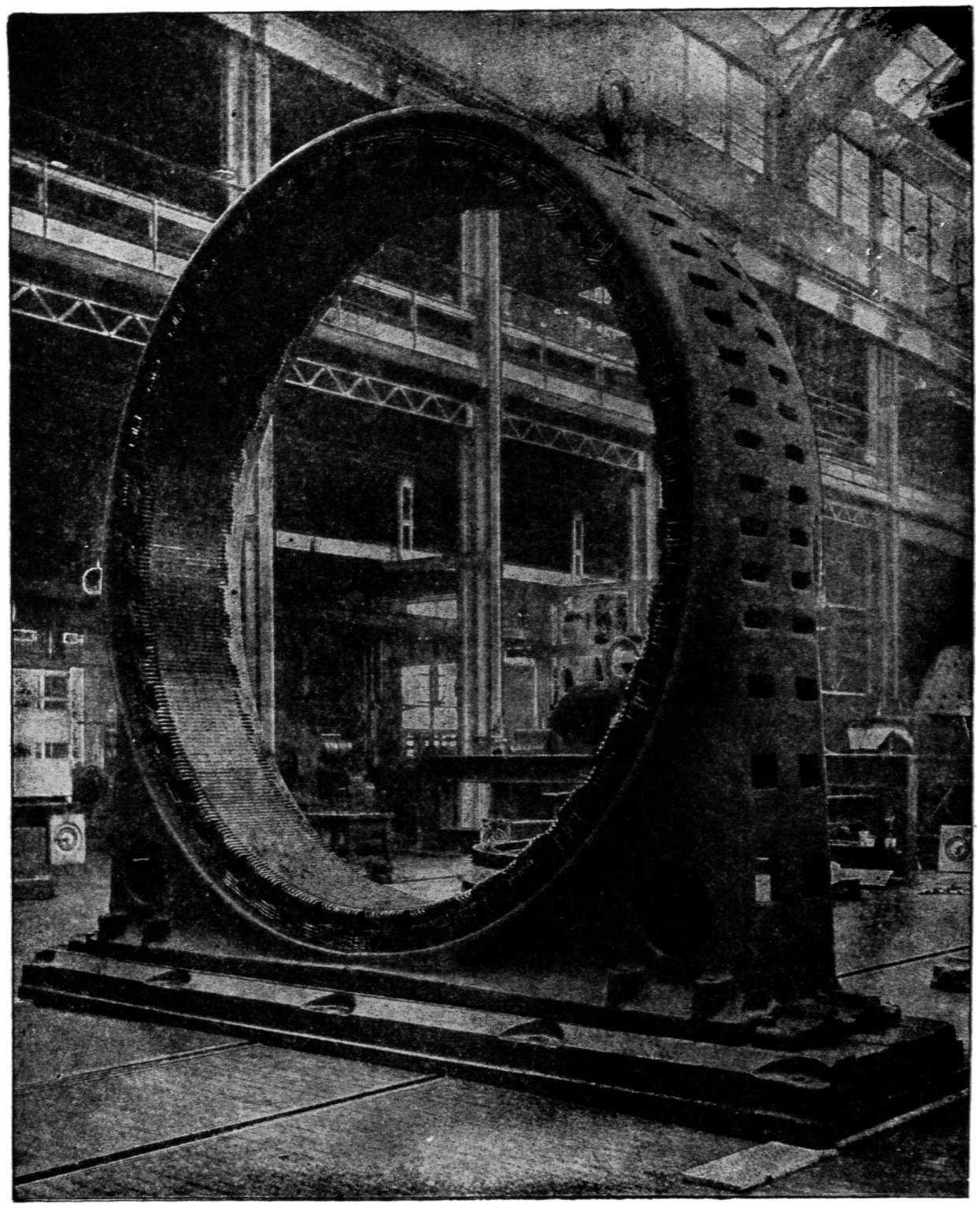

Fig. 3579.

so far described. It is known as the revolving field type. It can be seen at once that if we take the ordinary type, first shown, with the revolving armature and revolve the field, the armature can be held stationary. This is the principle upon which the machine in the figure acts, and the principle of all revolving field generators. The revolving field of Fig. 3582 is shown in Fig. 3583. The advantage of this construction over that in which the armature rotates is that the armature current can be taken directly to the external circuit without the use of collecting rings and brushes. This is also the case with the induction generators. In these machines, as all the wire is stationary, it is not necessary to have sliding contacts of any kind either for the field currents or those from the inductor coils, as they are called, as they can be

alternator manufactured by the General Electric Company, its capacity being 750 kilowatts, which is about 1,000 horse-power. The collector ring, through which the current is supplied to the coils of the revolving field, can be seen close to the hub of the rotating part, and also the stand that holds the brushes that come in contact with the collector rings.

From the description given so far of these machines, and, in fact, of all the alternating generators, it might be inferred that the construction of the armature is very simple; but such is not the case. In the simple form of alternator, with revolving armature, the armature core has to be made laminated just as in the continuous current machines, and, in fact, greater care must be taken to have the laminations well insulated from each other. In the

induction type of generators, the stationary part, upon which the inductor coils are wound, must also be laminated, for this is the part in which the currents are induced, and if it were made solid

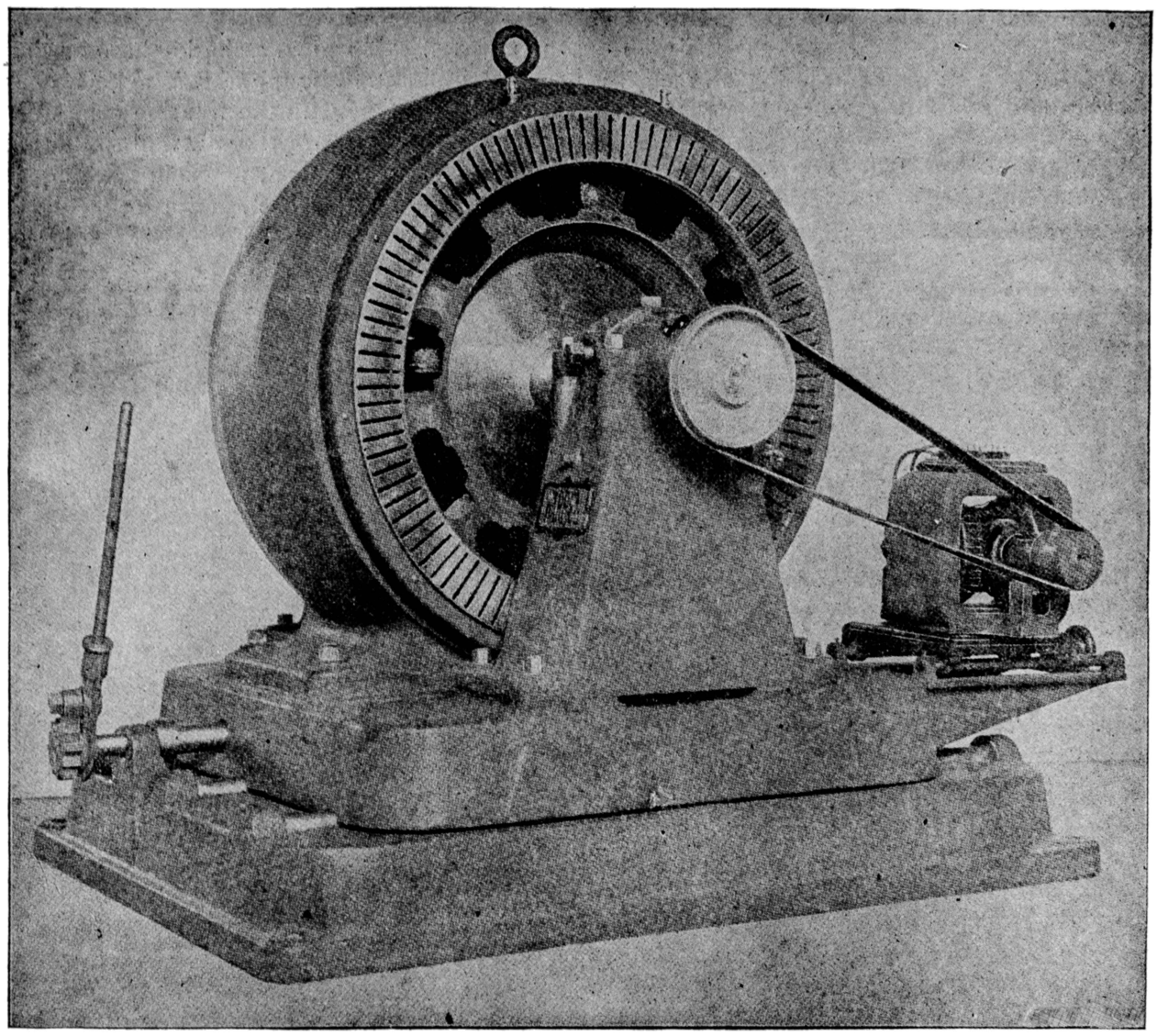

Fig. 3580.

there would be stronger currents developed in it than in the coils proper. In addition to this it is necessary to laminate other parts

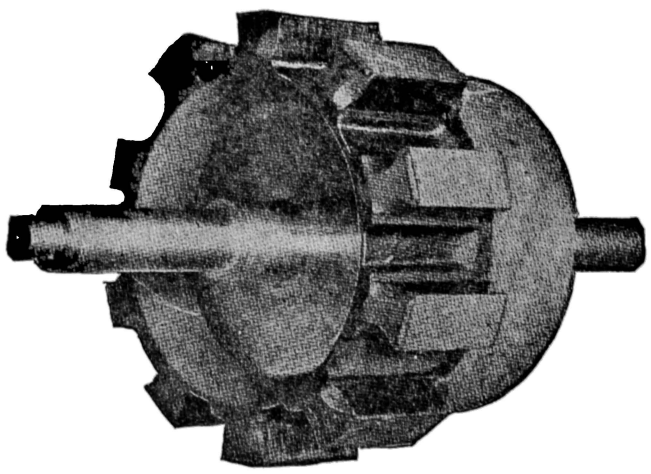

Fig. 3581.

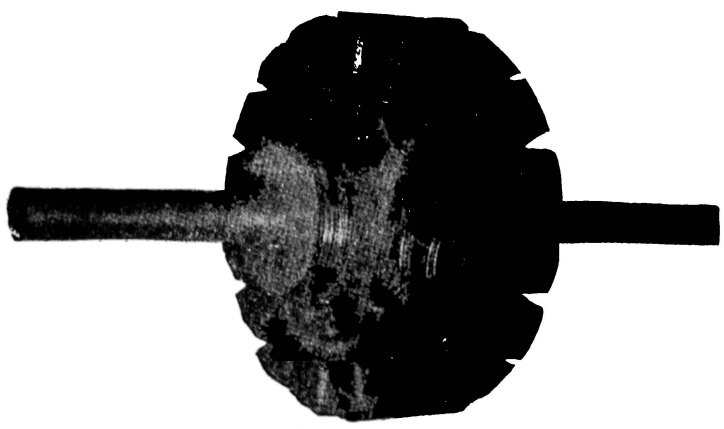

Fig. 3583.

of induction generators, and in some designs it is not possible to entirely eliminate the eddy currents by the laminations, for the lines of force cut the masses of iron in more than one direction. On this account the great advantage of these machines, which arises from the fact that all the wire is stationary, is to some extent lost, as it is counteracted in great part by the unavoidable losses due to the development of eddy currents. Thus it will be seen that even with its good points the induction generator has its drawbacks, although in several of the forms described the defects are small compared to the gains.

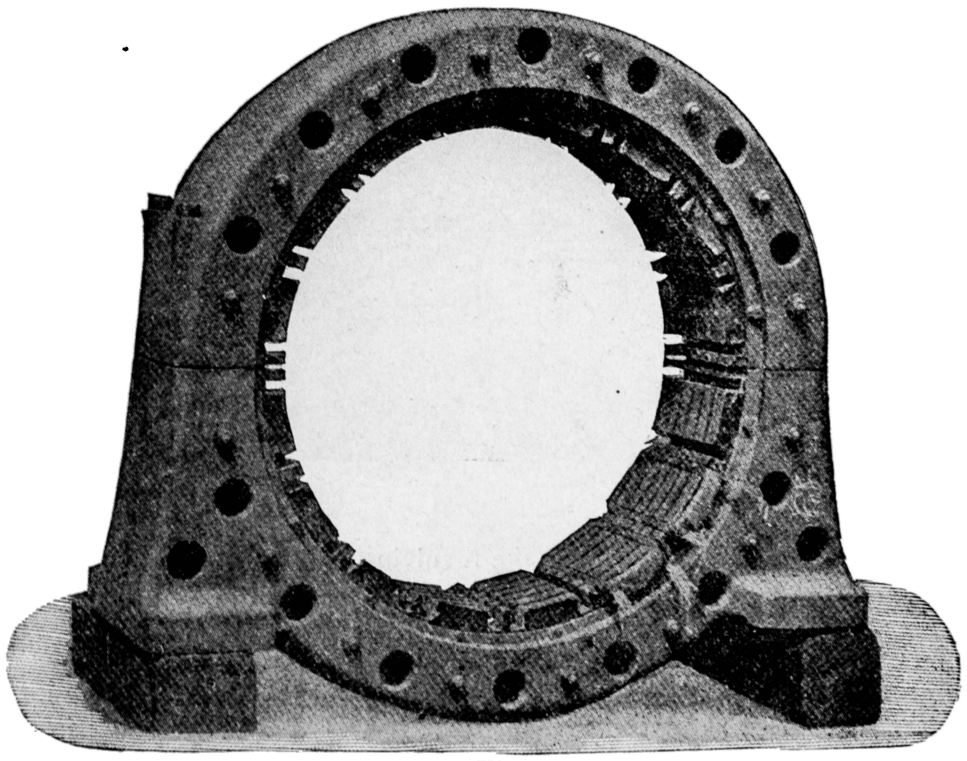

Fig. 3582.

In the revolving field type of generator, as the armature is the stationary part it must be laminated; but this would not be supposed to be the case from the appearance of Fig. 3585 or of Fig. 3582, both of which are machines of this type; the part seen of the stationary armature in these illustrations is simply a casing

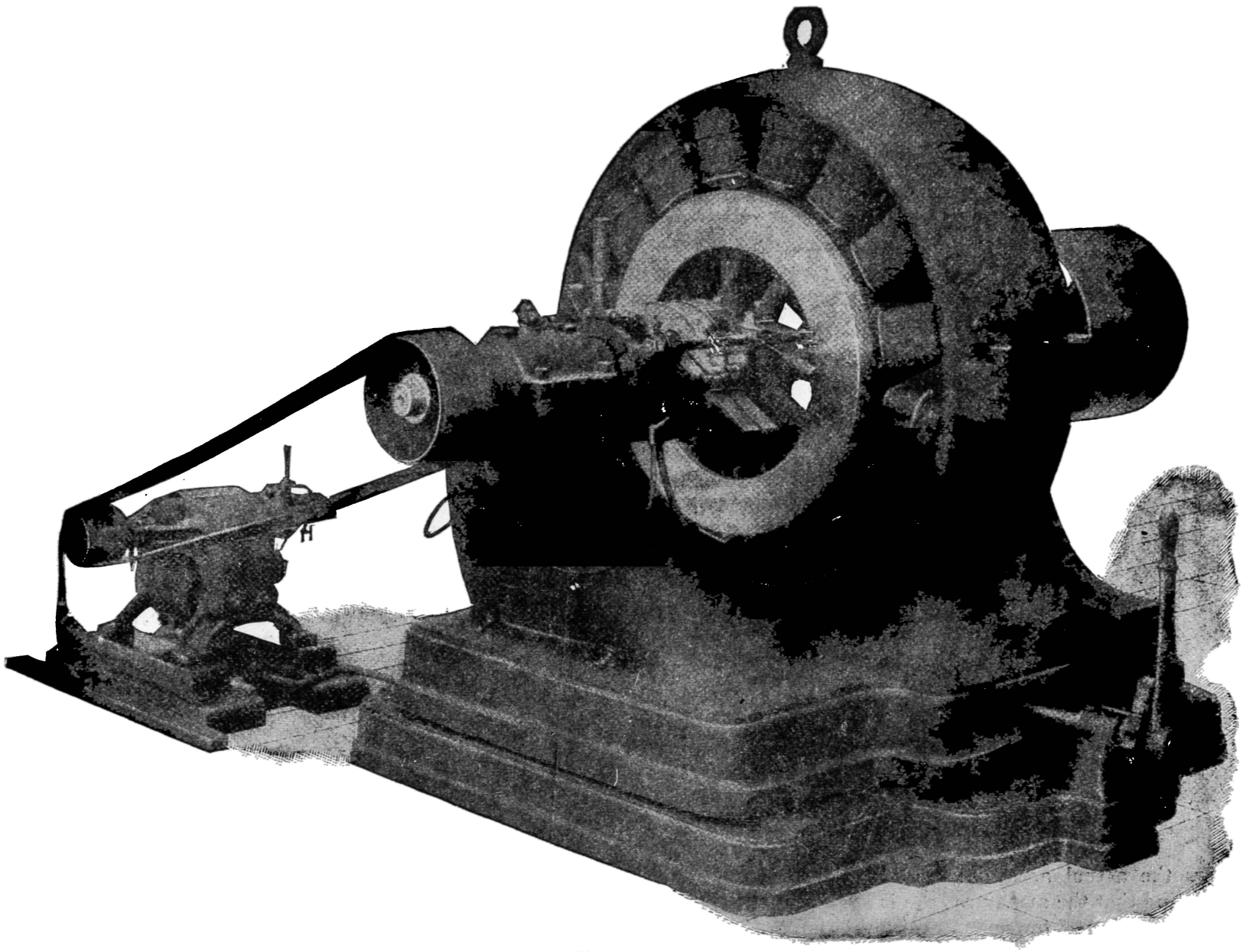

Fig. 3584.

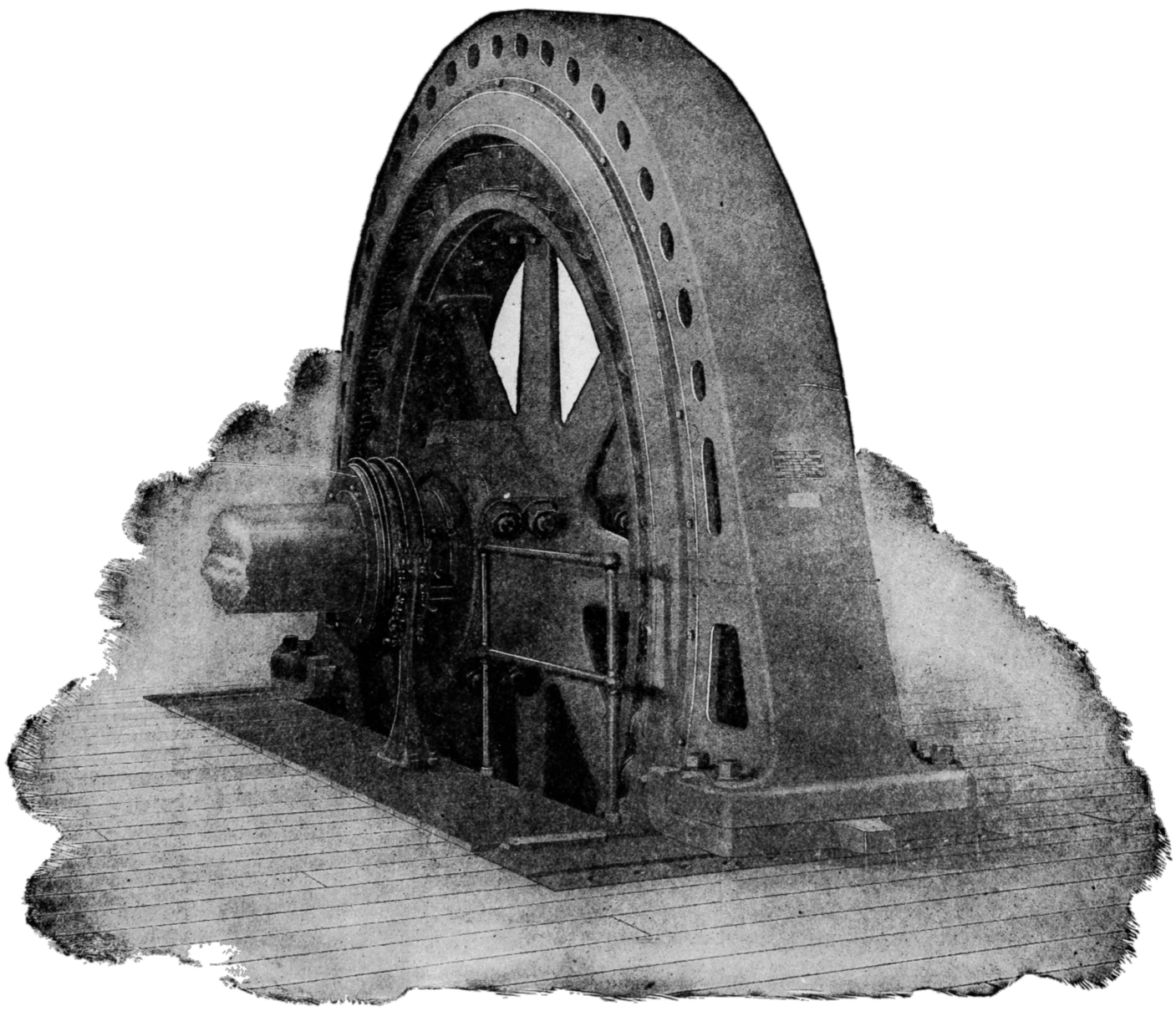

Fig. 3585.

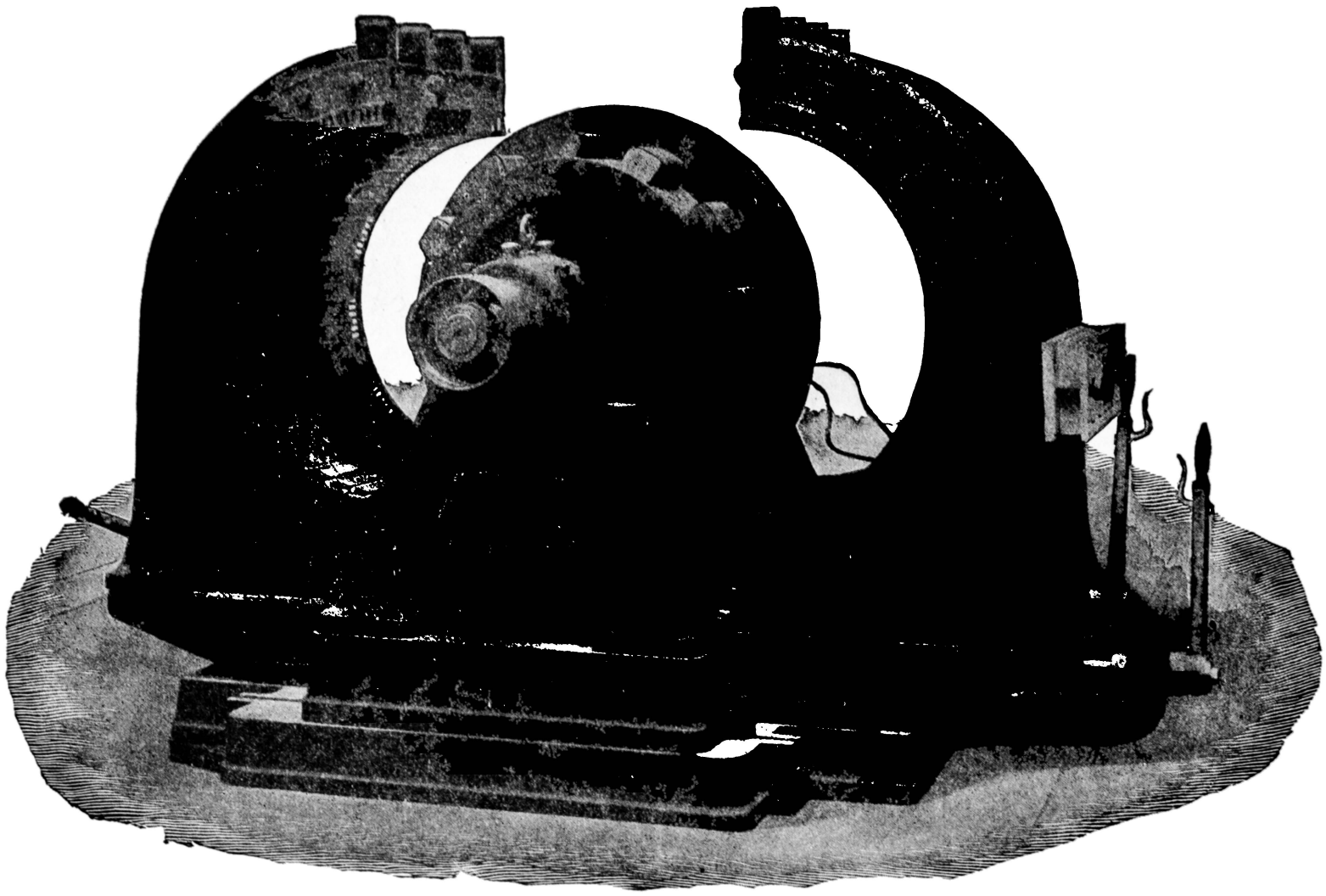

Fig. 3586.

that covers the actual armature, and if this were removed it would be found that the armature core is well laminated.

For the generation of currents of very high voltage, the induction generators and those of the revolving field type are specially well adapted, for as the wires in which the currents are induced are stationary, the insulation can be made more substantial than is possible in machines in which the armature rotates. On this account the generators made for high voltage are almost

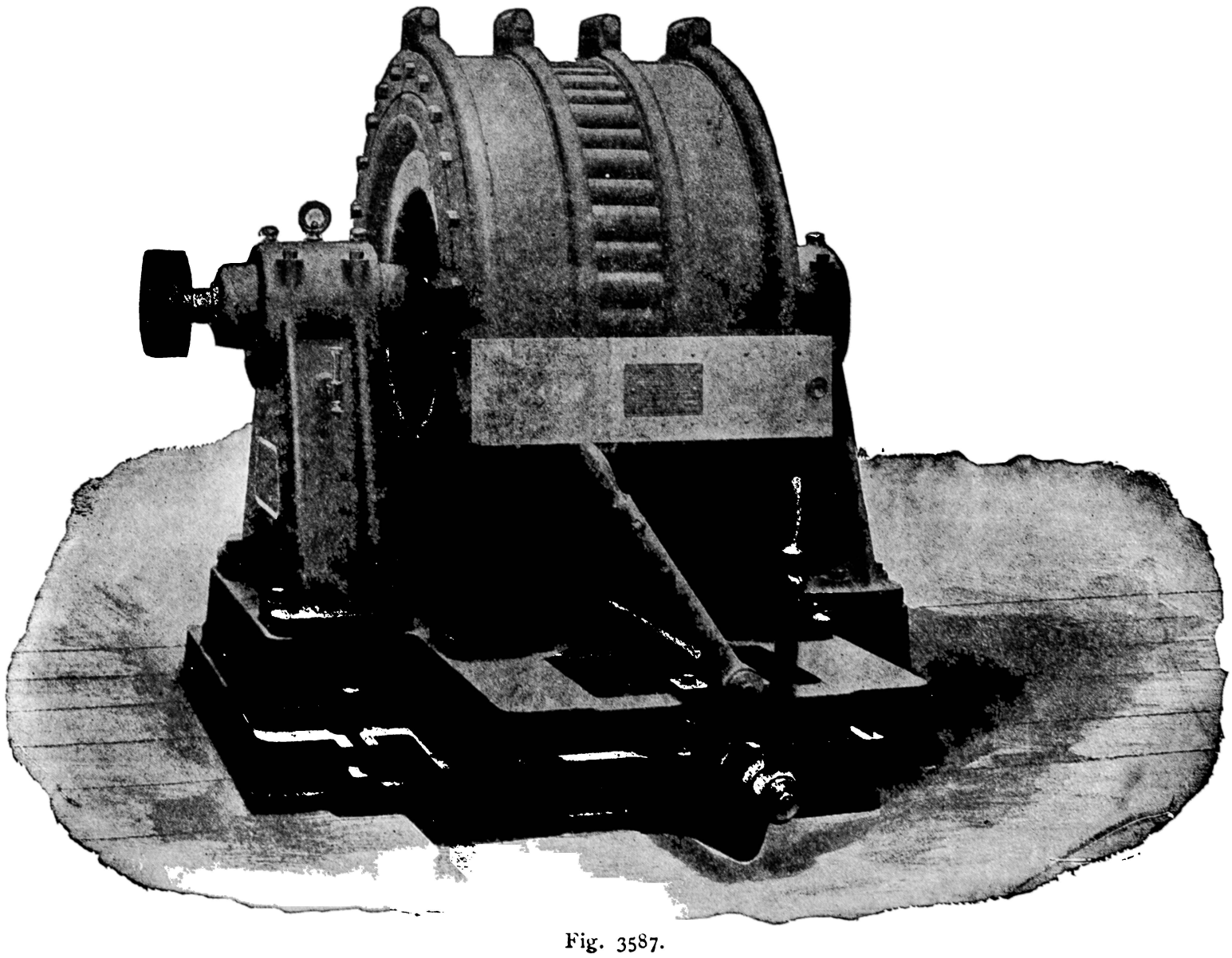

Fig. 3587.

entirely of the induction or revolving field type at the present time.

Figs. 3586 and 3587 show the type of induction generator made by the Stanley Company, the first figure representing the machine with the stationary part spread out so as to admit of inspection of the interior, and the second figure showing the generator when in proper position to run. In this machine there are two star-shaped rotating parts, and the field magnetizing coil is located between them, it showing as a disk in Fig. 3586. With this arrangement of two rotating stars it is possible to develop two-phase currents by setting the stars so that the teeth are staggered. The result can also be accomplished by staggering the coils just as in other generators, and by the combination of both arrangements it is possible to take off two multiphase currents, one from each side of the machine.

types are made for much greater capacity than continuous current generators. The machines installed at Niagara are of 5,000 horse-power capacity. In the matter of voltage, the alternating current also runs higher. Large generators of the continuous current type are generally made for voltages of 110 or 500, the first being used for incandescent lighting, and the latter for railway work. Alternators range all the way from 1,000 volts up to 15,000. These latter machines are used to transmit the power of waterfalls to great distances, as much as fifty miles in some cases, and the high voltage is used so as to reduce the size of the line wires through which the current is transmitted. In most cases the current generated by the generators is of 1,000 or 2,000 volts, and this, by means of transformers, is converted into currents of 10,000 or 15,000 volts, and in some of the latest installations, in which the distance of transmission is over sixty miles,

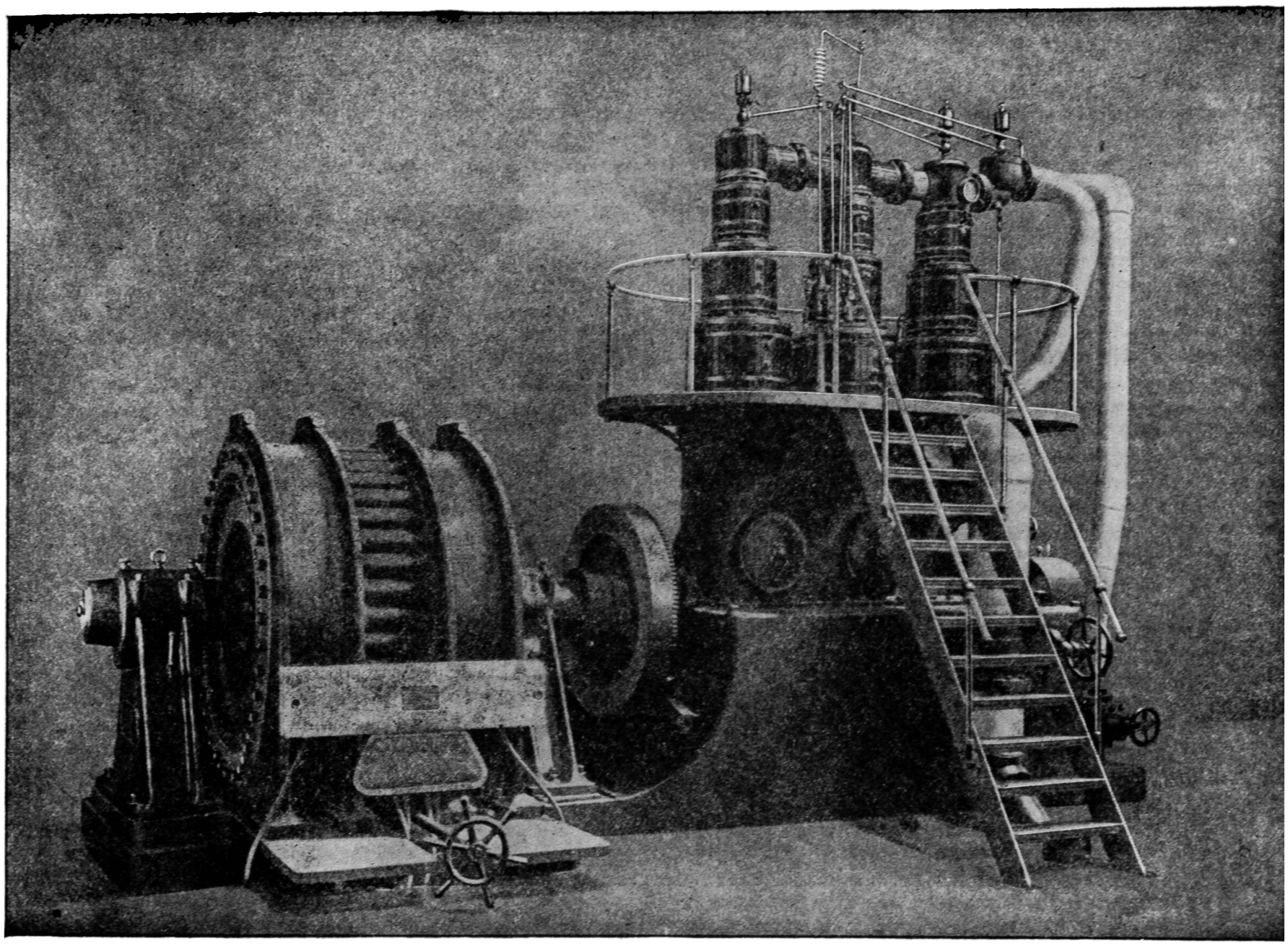

Fig. 3588.

Fig. 3588 shows a Stanley generator of about 500 horse-power coupled direct to a Willans engine.

In Fig. 3589 are shown two alternators of the 1,000 horse-power type direct connected to Corliss engines. These machines are made by the General Electric Company, and are similar in design to the one shown in Fig. 3585. It will be seen that the number of poles in these generators is very great, this construction being necessary, as already explained, to be able to obtain the required frequency with the slow velocity of the rotating part. The number of cycles performed by the current in one revolution of the shaft will be equal to one-half the number of poles ; hence, with 100 poles, the cycles per revolution will be 50, and if the speed of the engine is 90 revolutions per minute, which is equal to one and one-half revolutions per second, the frequency of the current will be one and one-half times 50, which is 75 cycles per second.

Alternating current generators of the two-phase and three-phase

the voltage is raised to as much as 30,000 volts. These transformers will be explained hereafter.

ALTERNATING CURRENT MOTORS.—Alternating current machines, like those of the continuous current type, are reversible ; that is, they will develop electric currents if driven, and if supplied with current will develop power ; or, in other words, become motors. But as there are several kinds of alternating current generators, and as these develop currents of different characteristics—single-phase, two-phase, three-phase—it follows that any particular generator will act only as a motor when supplied with the same kind of current that it generates when acting as a generator. Not only this, but the manner in which the field magnetism is obtained must be the same in both cases. If we take a machine that generates a simple alternating current—that is, a single-phase current—and pass such a current through it, it will run as a motor, providing its field coils are supplied with a continuous current,

just as when operating as a generator. If the machine is of the two-phase type, it will run as a motor if supplied with a two-phase current, its field being magnetized by a continuous current. Finally, if the generator is three-phase, it will run as a motor if supplied with a three-phase current.

A generator, as we have seen, will always develop a current of a frequency that corresponds to the velocity with which it rotates, and from this the natural inference would be that if run as a motor it would attain a speed corresponding to the frequency of the current. This, as a matter of fact, is just what occurs, and furthermore, at any other velocity the motor will not develop power. Now it is not difficult to see that, as when running as a generator the machine cannot generate a current of a frequency that does not correspond with the velocity, when running as a motor it should not develop power except at a speed corresponding to the frequency of the current.

Motors of this class—that is, generators acting as motors—are called "synchronous motors," from the fact that they will always run at the same velocity as the generator from which the current is supplied; that is, providing both machines have the same number of poles. The motor will synchronize with the frequency of the current, but the revolutions it makes may be the same as those of the generator or twice or three times or some other multiple of the generator velocity, depending upon the relative number of poles in the two machines. If the motor and generator have the same number of poles, then the two will run at the same velocity, and this will be true whether the distance between them is ten feet or ten miles. Owing to the fact that these motors run at synchronous speed they are very valuable in cases where it is desired to have two separate machines run at precisely the same speed; as, for example, where the two halves of a swinging drawbridge are lowered and raised by machinery.

Since synchronous motors will not develop power except when running at their full velocity, it follows that they will not start of their own accord, but must be run up to full speed by some external agency before they will take hold and do work. On this account they are not well suited for small motors, as the complication of having a starting device, which would have to be generally a continuous current motor of smaller size, is too great. Another drawback is that they require an alternating current for the part in which the induction takes place, and a continuous current for magnetizing the field. Both the above objections are overcome, however, by so constructing the machine that it will act in a manner different from its normal operation when starting. As we have explained, an alternator can be made self-exciting by passing a small portion of the current it generates through a commutator, and rectifying it so that it may be used to magnetize the field. A self-exciting generator when run as a motor will supply the current for its field; thus the difficulty of providing a continuous current from an independent source is overcome. As to starting, this can be accomplished by running the current through the field and armature, in series, just as if it were a continuous current, and the same commutator that rectifies the current for the field coils will properly commutate the current in starting. By means of suitably constructed switches, the connections can be changed when the motor attains full speed, and from that time onward the alternating current will pass through the armature only, and the field current will be drawn therefrom through the commutator.

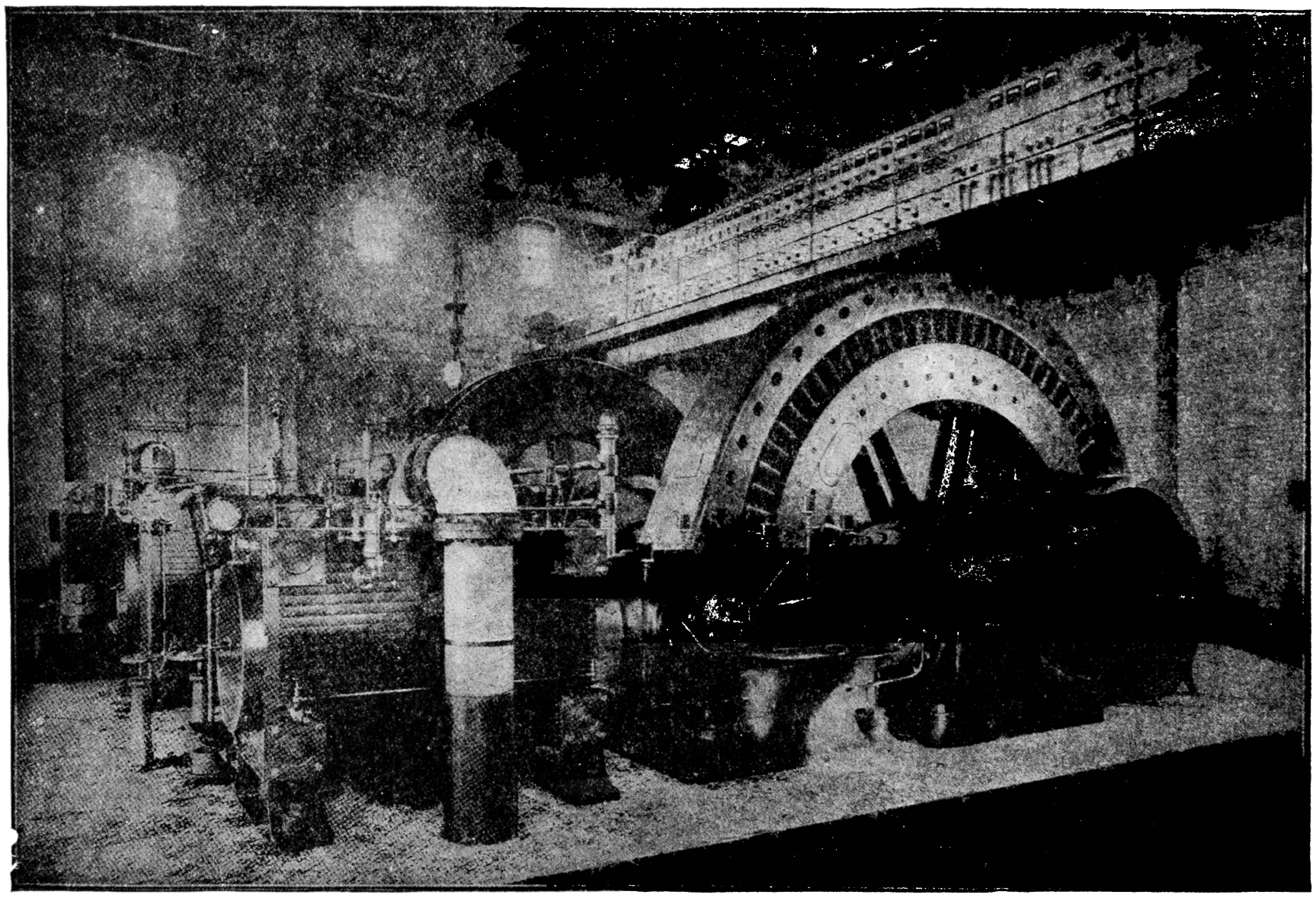

Fig. 3589.

For motors of large capacity the machines described are extensively used, and by many are considered the best; but for general purposes, and especially for small motors, they are not as satisfactory as those known as induction motors. These latter are divided into single and multiphase induction motors. On account of the name it might be inferred, at first thought, that they are the same in principle as the induction generators; but such is not the case. They act by induction, but in an entirely different manner, as will appear from the following simple explanation:

Suppose you take a four-pole field frame, two poles being on the vertical line and two on the horizontal. Now pass the current

from one of the circuits of a two-phase generator through the coils on the vertical poles, and connect the other circuit of the two-phase generator with the coils wound upon the horizontal poles.

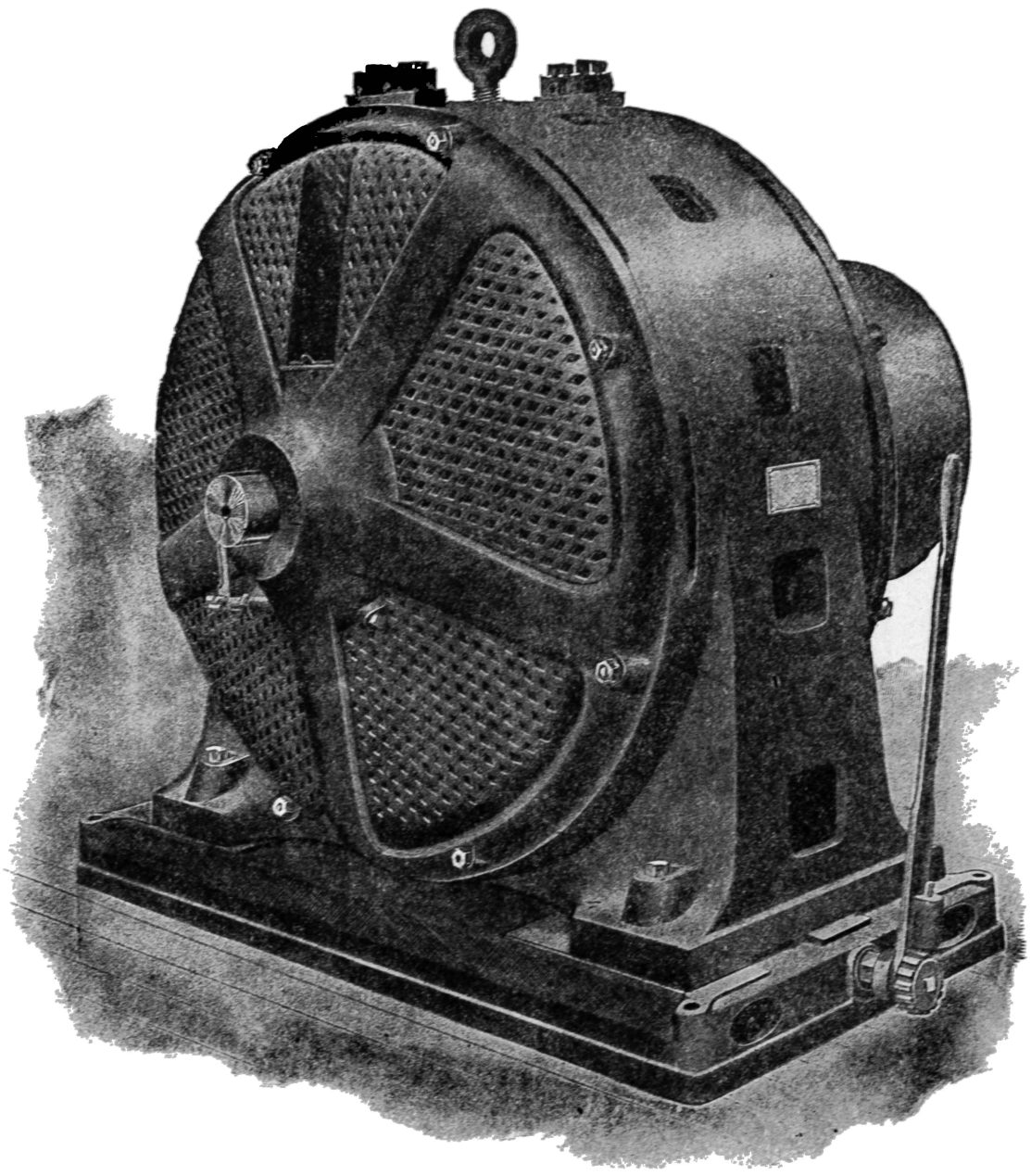

Fig. 3590.

Since the two currents are out of time with each other, it follows that when the current through the vertical pole coils is at its

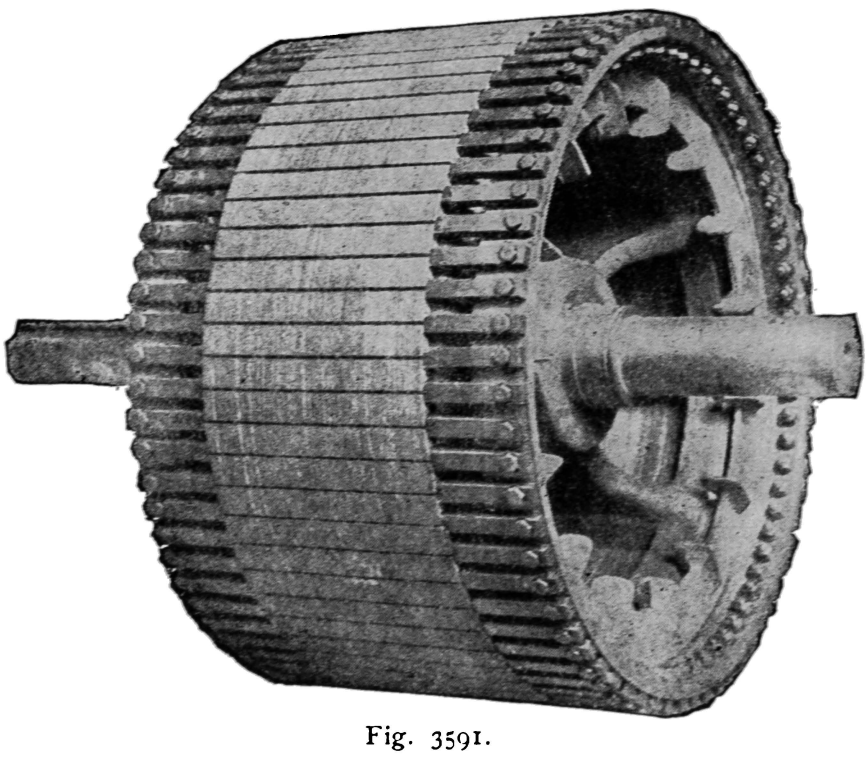

Fig. 3591.

maximum strength, that through the coils of the horizontal poles will be zero. Such being the case, it is clear that when the vertical poles are being magnetized to the utmost, the horizontal ones are not magnetized at all. As the current in the vertical pole coils begins to reduce, that in the coils of the horizontal poles will grow ; hence, the side poles will begin to acquire strength as fast as the top and bottom ones lose it, and by the time the latter become entirely demagnetized, the former will become fully magnetized. Thus it can be seen that if the vertical poles are magnetized to their utmost at the time when we begin to consider the action, while the horizontal ones are not magnetized at all, that after one-quarter of a cycle the conditions will be reversed ; for then the current, passing through the coils of the horizontal poles, will be at its maximum strength, while that of the vertical coils will have dropped to zero. Thus while at the start the poles developed in the field were at the top and bottom, after a quarter of a cycle they have shifted around to the sides. After another quarter of a cycle the current through the coils of the horizontal poles will again be zero and that of the vertical coils will be at the maximum value, but its direction will be reversed. From this we see that after the half cycle has been performed, the top and bottom poles will again be magnetized, but as the direction of the current has been reversed, the polarity will also be reversed ; so that if on the start the top pole was positive it will now be negative, and the bottom pole will be positive. In the time during which the currents have passed through one-half of a cycle the position of the positive pole in the frame has changed from the top to the bottom ; that is, it has made one-half of a revolution. In making the same the second half of the current cycle, the positive pole will rotate through the other half of the circle. From this it will be noticed that if the poles of a four-pole field are wound with the two circuits of a two-phase current, the two horizontal pole coils being connected with one circuit and the two vertical pole coils with the other circuit, that the position of the poles in the field will change as fast as the currents alternate ; that is, the field

poles will rotate in unison, or synchronism, with the frequency of the current. A field of this kind is called a rotating field, and as it is developed by a two-phase current, motors in which the field is magnetized by such currents are called rotary field motors as well as induction motors.

A three-phase current, if used to magnetize the poles of a six-pole field in the same manner as the two-phase current, as explained in the foregoing, will also develop a rotating field ; hence, three-phase motors in which the field is magnetized by the three currents are also called rotating field motors.

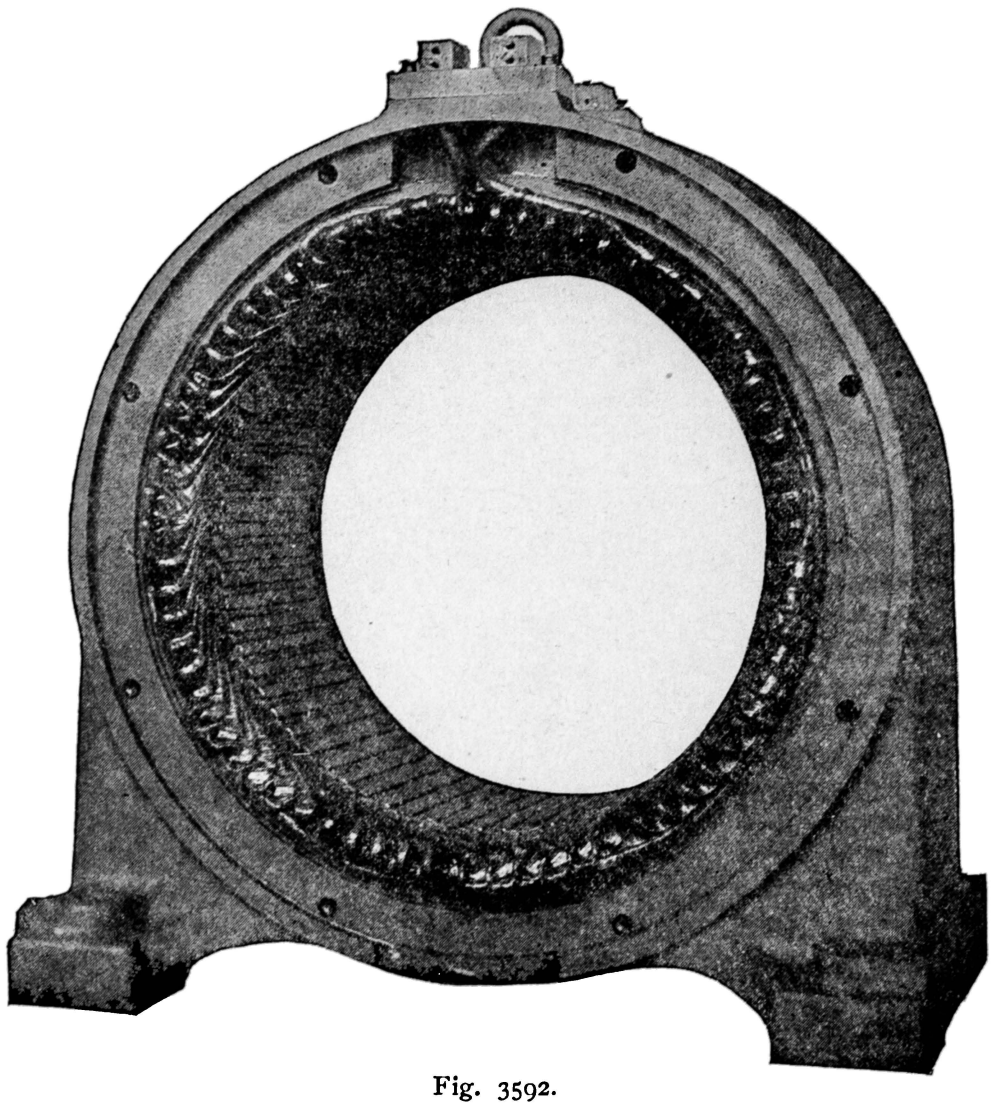

Fig. 3592.

If an armature is placed within the four-pole field, and the current is passed through the field coils so that the poles may rotate, then it is evident that the lines of force issuing from the rotating poles will sweep over the surface of this armature ; and if upon it are wound several coils short circuited upon themselves—that is, each coil having its ends connected, so as to form an endless coil—then, in these coils currents will be induced. That this action must take place can be clearly realized, for if the armature stands still and the field poles rotate, the lines of force will cut through the armature coils and thus induce therein electromotive

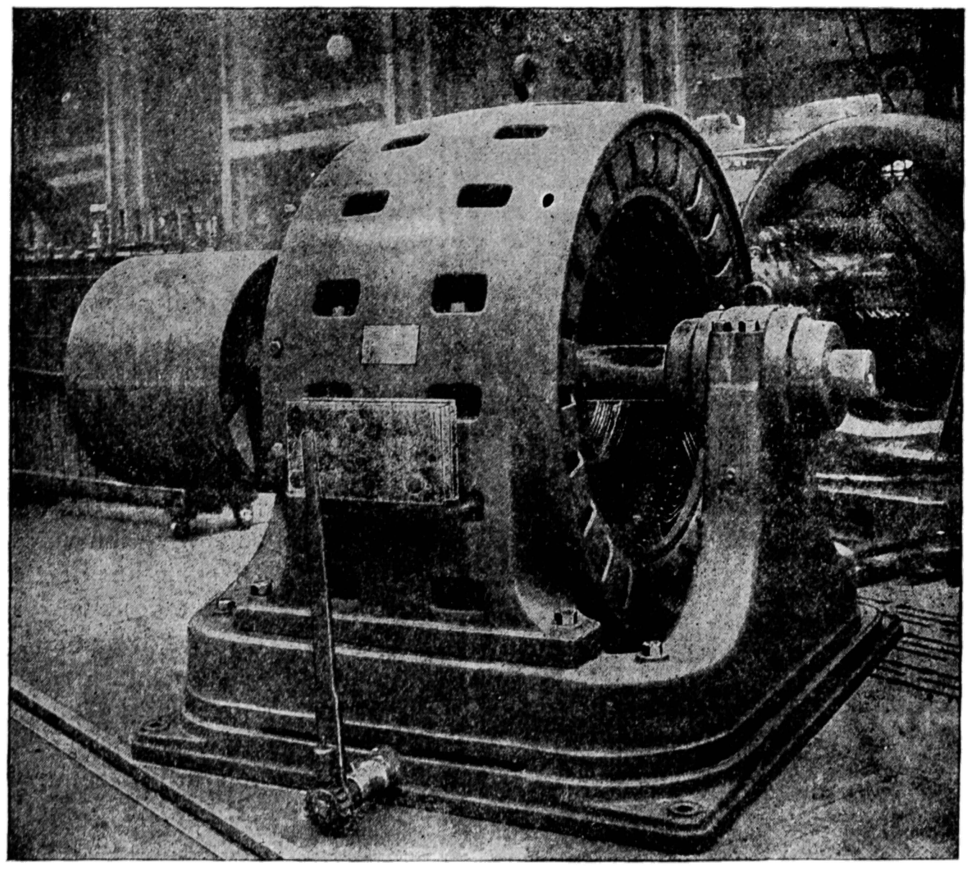

Fig. 3593.

forces, and these will set up currents. Now these currents developed in the armature coils are due to the inductive action of the field magnetism upon the armature, and it is on this account that motors of this type are called induction motors as well as rotary field motors.

The currents induced in the armature will develop therein magnetic poles, and as these will not be in line with those of the field, a pull will be exerted between the two; thus the power of the motor is developed. This pull, as can be clearly seen, will be exerted when the armature is at a state of rest, hence such a motor will start of its own accord. As the speed of the armature increases, the currents induced in it will become weaker, for then the lines of force will not cut through the armature coils as fast. That this is actually so can be realized if we only consider that if the armature were rotating at the same velocity as the field poles, the lines of force would not cut the armature coils at all, because they would both be revolving side by side just like two horses running around a ring at the same velocity. In the case of the horses, if one ran faster than the other it would overtake it quite often, the frequency with which it would overtake it depending upon how much faster it ran.

Since no current would be induced in the armature if it rotated at the same velocity as the field, it follows that at this speed there would be no magnetic poles developed in the armature, therefore no pull exerted between it and the field; and this means that there would be no power developed. From this we can see that a rotary field motor cannot run as fast as the field rotates; that is, it cannot synchronize with the frequency of the current, but must always run somewhat slower. As it is not difficult to realize that the strength of the current developed in the armature is proportional to the difference between the speed of the armature and the field, we can understand that the more pull the motor has to develop, the slower it will run. The reduction in the speed produced by a given increase in the load will depend upon the manner in which the armature is wound. If it has coils of high resistance, the speed will vary greatly with increases in load; but if the resistance is low, the variation in speed will be small. From this it will be understood that rotary field motors can be made to run at very nearly a constant speed with changes in load, or they may be made for variable speed.

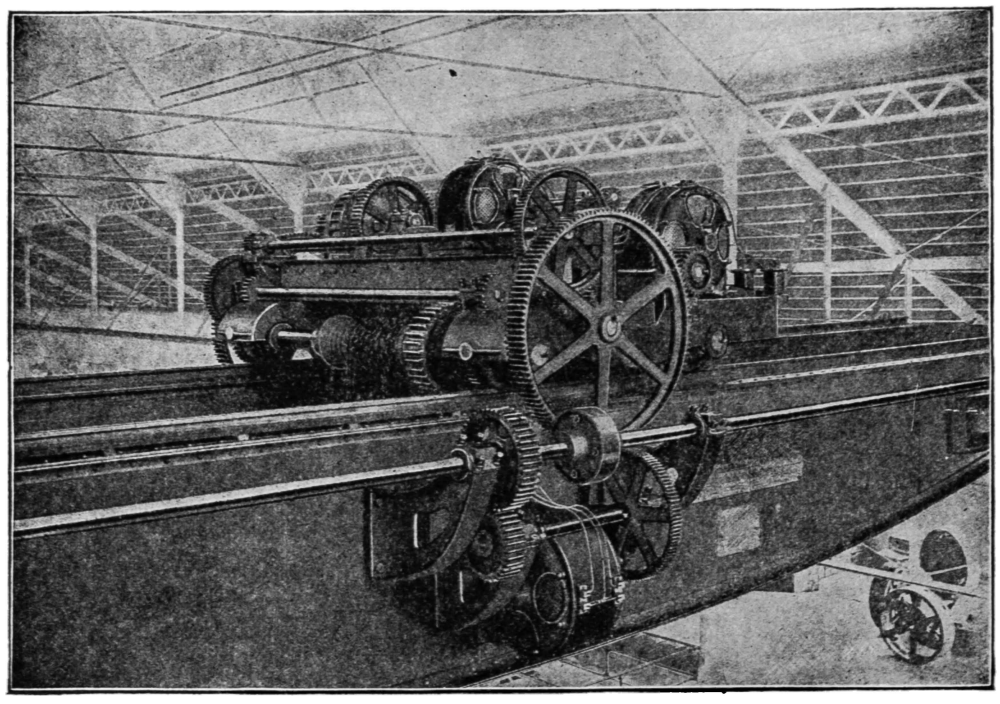

Fig. 3594.

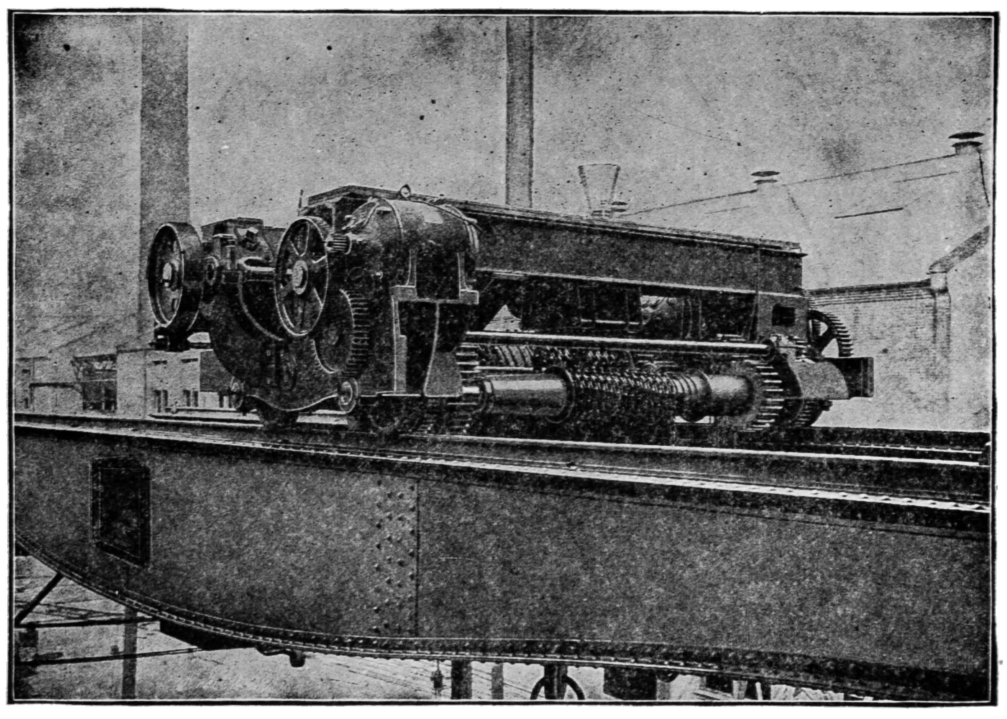

Fig. 3595.

A rotary field motor if made with a field of solid iron would not run at all; or, if it did, the performance would not be satisfactory. The reason for this is that the lines of force of the rotating field cut through the body of the field just as much as through the armature, and, in fact, more; for the field metal is always stationary, therefore the velocity of the lines of force through it is always the maximum. Now, as we know, if the metal were solid, the cutting of the lines of force through it would result in developing very

strong eddy currents, and these would not only absorb a vast amount of power, but, by setting up lines of force on their own account, would neutralize the field magnetism, and possibly completely destroy it, so that there would be no rotating field left, and consequently no action of any kind. By laminating the field this difficulty is overcome.

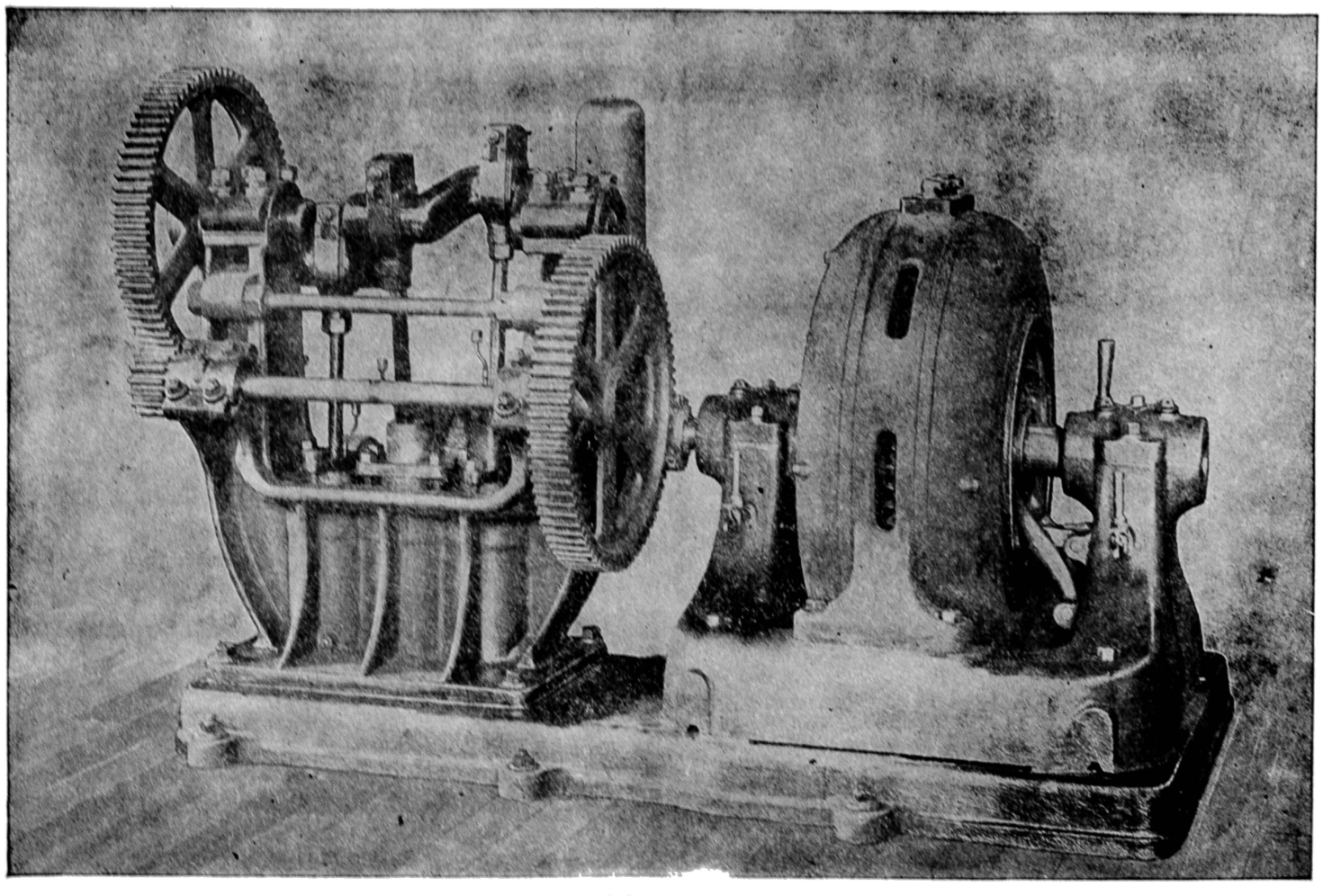

Fig. 3596.

If rotary field motors were made with four poles, in the case of two-phase currents, or six poles if for three-phase currents, the result would be that the velocity would be very great, as it would amount to one turn for each cycle of the current; hence for 100 frequency, the speed would be 100 per second, or 6,000 per minute. For the purpose of reducing the velocity of rotation, these machines, like the generators, are made with a number of poles.

The general appearance of the rotary field or induction motors made by the Westinghouse Company can be obtained from Fig. 3590, while the construction of the field and the armature is shown in Figs. 3591 and 3592, the latter being the field. It will be noticed that this field is similar in general design and in the manner in which the coils are wound to the stationary part of the induction generators, already explained. The armature, how-

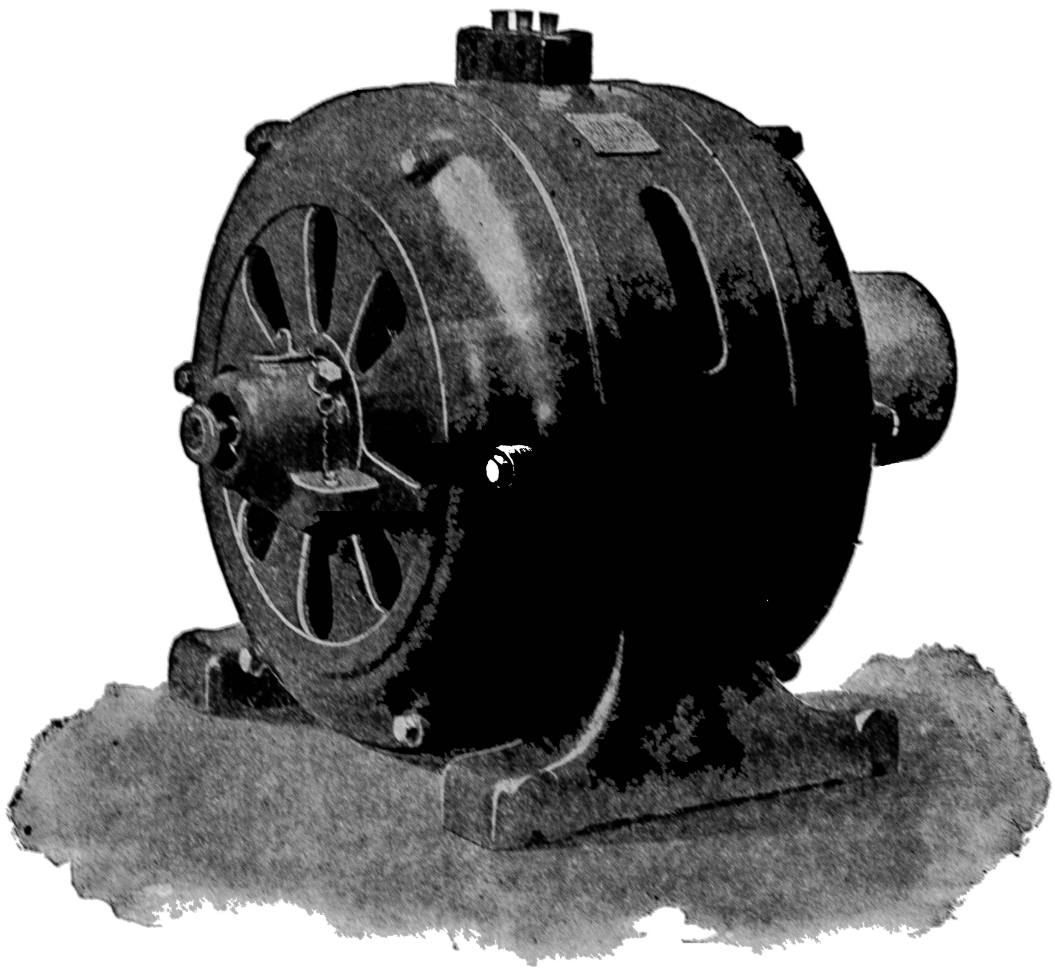

Fig. 3597.

ever, is very different; for while in the induction generator the revolving part, which takes the place of the armature, is made with projections that give it a star shape, in the induction motor the armature is perfectly smooth. The winding of these armatures is very different from that used in continuous current machines, this difference being due to the fact that in the latter machines the winding must be such that the currents developed in the coils may be conveyed to the external circuit, while in the induction motor the currents must circulate wholly within the armature. If the motor is to be of the variable speed type, in which case the armature resistance must be high, the winding is in the form of coils that are closed upon themselves and separated from each other. Such a winding is illustrated in Figs. 3566 and 3567, which are two and three coil windings. Generally for induction motors the number of coils is equal to the number of currents,

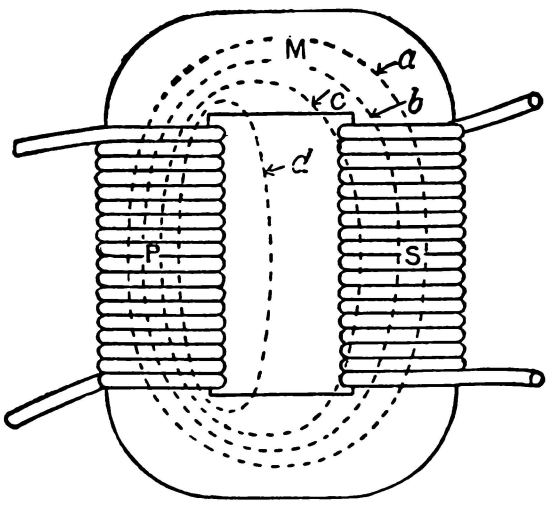

Fig. 3599.

or two or three times as many, although any number of coils greater than two may be used. When the motor is to be of the constant speed type, a low resistance winding is required, and this is generally made in the form shown in Fig. 3591, and is known as a squirrel-cage winding. By examining this illustration carefully it will be noticed that there are grooves in the armature from one side to the other, and that in these are placed bars which project some distance at each end and are provided with screws. The ends of these bars are fastened to rings by means of the screws shown, the ring at the front end being well defined in the cut. From this description it will be seen that the bars, together with the end rings, form a wheel such as are attached to squirrel cages, hence the name. With this construction it can be clearly seen that the armature resistance is very low, and that the winding virtually amounts to a separate coil winding, with all the ends of all the coils brought to a common junction.

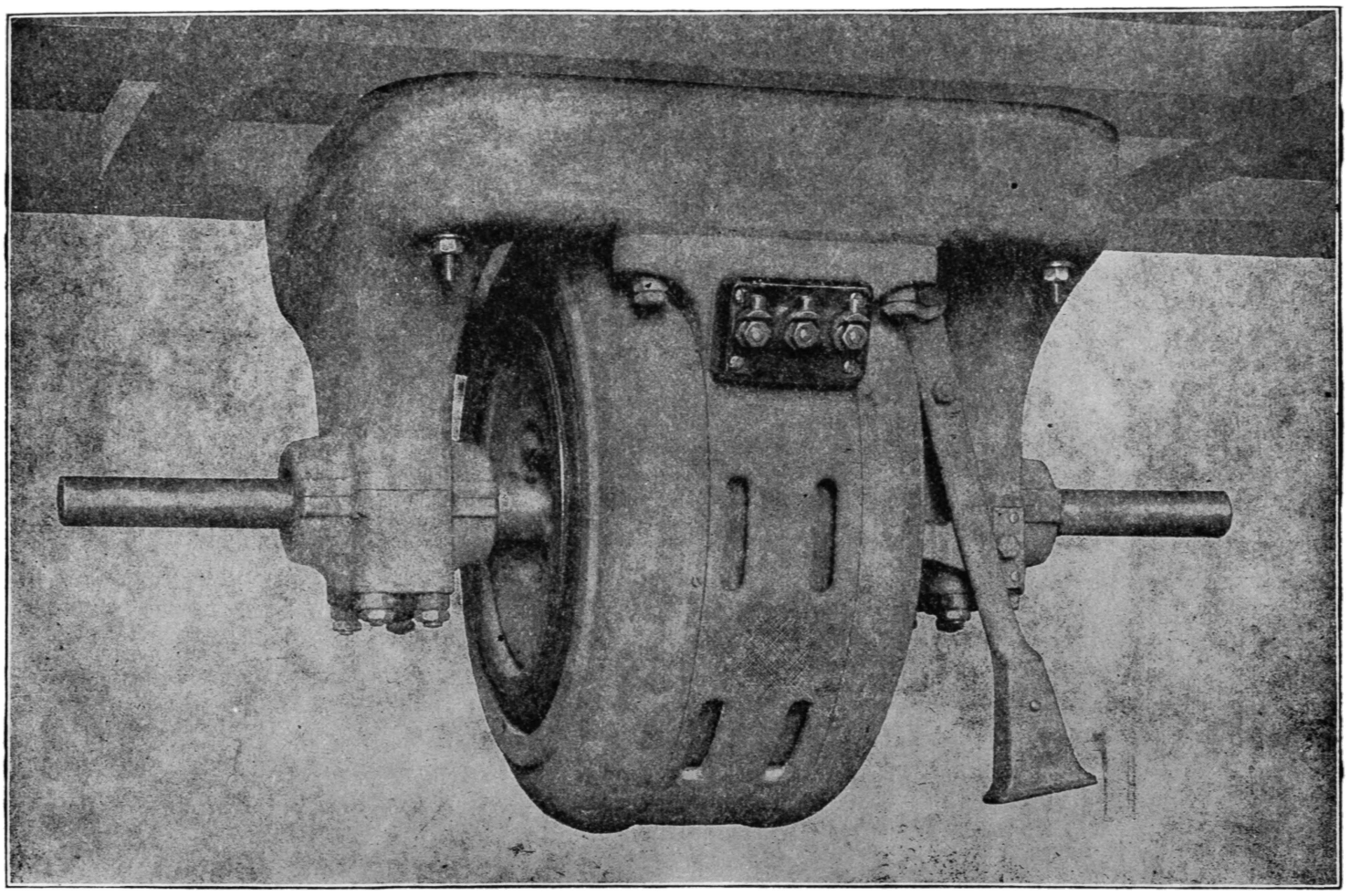

Fig. 3598.

When this armature is rotating in the stationary field, currents are induced in one direction in all the bars occupying a position on one side of the armature, and in the opposite direction in all the bars on the other side; and as the position of these currents must always remain the same with reference to the position of the field poles, it follows that as the field gains upon the armature the currents in the bars nearest to the line that divides the direction of flow of current are reversed in one bar after another; thus, considering the current flowing in each individual bar, it can be seen that it is alternating, and alternates once for each time that the rotating field overtakes the armature.

The line wires running from the generator are attached to the ends of the wire coils wound upon the stationary part or field, shown in Fig. 3592, and as these wires are stationary, no collector rings or sliding contacts are required, the connections being perfectly rigid.

Fig. 3593 is a Westinghouse two-phase induction motor of 400 horse-power capacity. Fig. 3594 shows a crane operated by a Westinghouse induction motor. Another crane with the same make of motors is shown in Fig. 3595. The first illustration represents an indoor machine, while the second is for outdoor service; hence, in the latter the motors are constructed so as to be weather proof, this being accomplished by substituting solid ends in place of those with panels covered with open gratings.

In Fig. 3596 is shown an induction motor made by the General Electric Company and arranged for direct connection with a pump. In Fig. 3597 is shown the standard motor of this type for stationary purposes, made by the same company, and in Fig. 3598 is shown a design used for connection with line shafting, it being so made as to be attached to the stringers to which the shafting hangers are secured.

These motors, it will be noticed are substantially the same in design as those of the Westinghouse make, and in fact the princi-

pal difference is in the details of construction and in the proportion of the several parts.

In Fig. 3598 there are three binding posts shown, to which the line wires are attached, and as with a two-phase current there are four wire ends, and with a three-phase six ends, it may prove puzzling how the currents can be connected with the field coils properly with this number of wires. This we can explain by saying that for either the two or the three phase currents only three wires are required in the transmission lines. To explain this, take first the two-phase system, and we will see at once that if one wire were run from one of the circuits to the point of distribution and the other wire were grounded, the current would pass to the distant point through the one wire provided, and would return to the generator through the ground. Now what would be true of one of the circuits would be true of the other, hence we would only require one wire for each circuit, the ground forming the return path for both currents. But if the ground can form the return path for both circuits, so can a wire; that is, the wire of each circuit that would be connected with the ground can be connected with this common return, and thus we succeed in transmitting the two currents with only three wires.

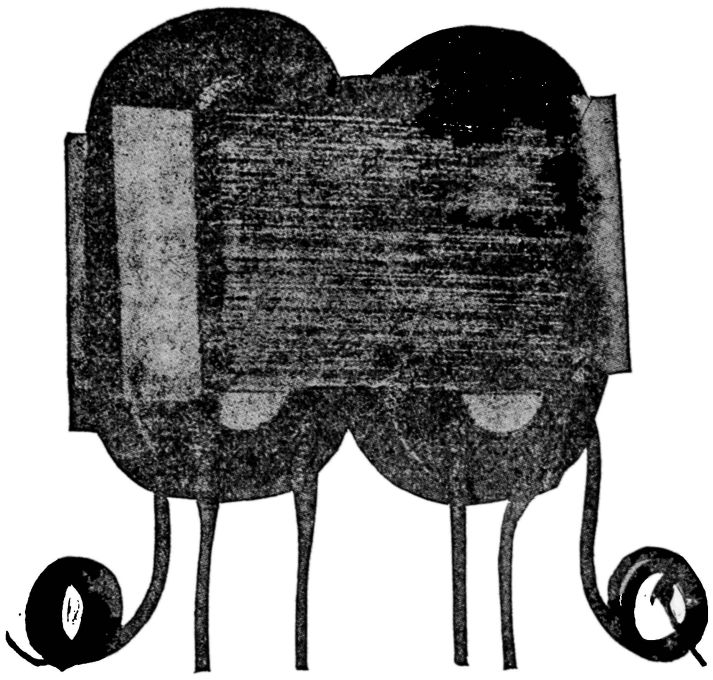

Fig. 3600.

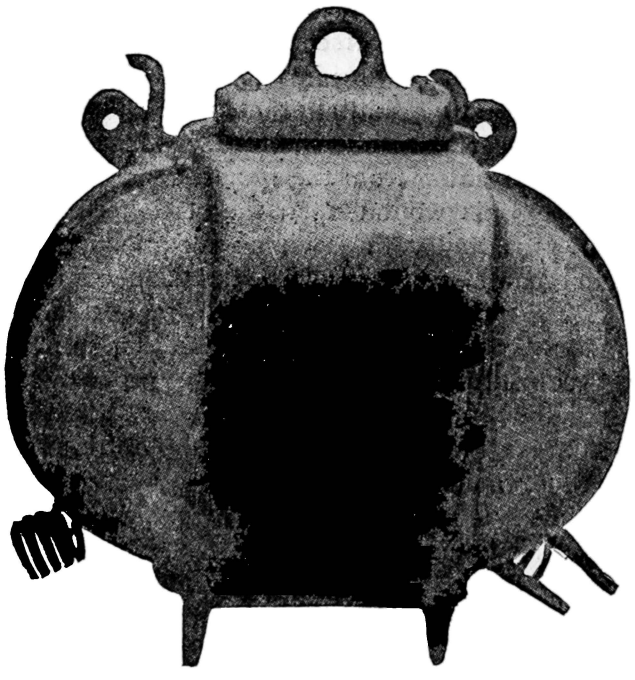

Fig. 3601.

Now the way in which we accomplish the same result with three currents is this. The time relation between these currents is such that when one current is of the maximum strength, and say positive in direction, the other two are of only one-half their maximum strength, and negative in direction; hence the one positive current can return to the generator through the two wires carrying the two negative currents of one-half the maximum. If we take the instant when one of the three currents is zero, then of the other two the strength will be the same, but one will be positive and the other negative; therefore, the first can return to the machine along the path of the second, and in fact becomes the second when it enters this path. From this explanation it can be seen that, owing to the fact that the three currents in a three-phase system are separated from each other, or are out of time by one-third of a cycle, three wires are all that is necessary to convey the three currents, as at any time the currents coming from the machine through a portion of the wires can return without interference of any kind through the remainder.

In order that a motor of the induction type may be started properly it is necessary to have some kind of starting device, just as with continuous current motors, and this starter must be a resistance. If the winding of the armature is of the squirrel-cage type, the starting resistance can be placed within the armature itself, and then it can be cut out as the machine gains headway by the movement of a lever, such a lever being shown in Fig. 3598. If the armature winding is of the coil type, then the starting resistance will have to be placed outside of the armature and will consist of an apparatus similar to that explained in connection with continuous current motors. Induction motors can also be started by introducing resistance in the field circuits, but when this is done, the pull on the start is very weak; therefore this arrangement is not used except in cases where the machine can start up light and the load be thrown on after it is under full headway. This last method would never be resorted to if it were not for the fact that if the motor is started up with a resistance outside of the armature, this can only be connected with the coils on the latter through collector rings and brushes. As these rings are always more or less of an objection, it is not desirable to use them if it can be avoided, and it can if the resistance is placed in the field circuit, from the fact that the field wires are stationary.

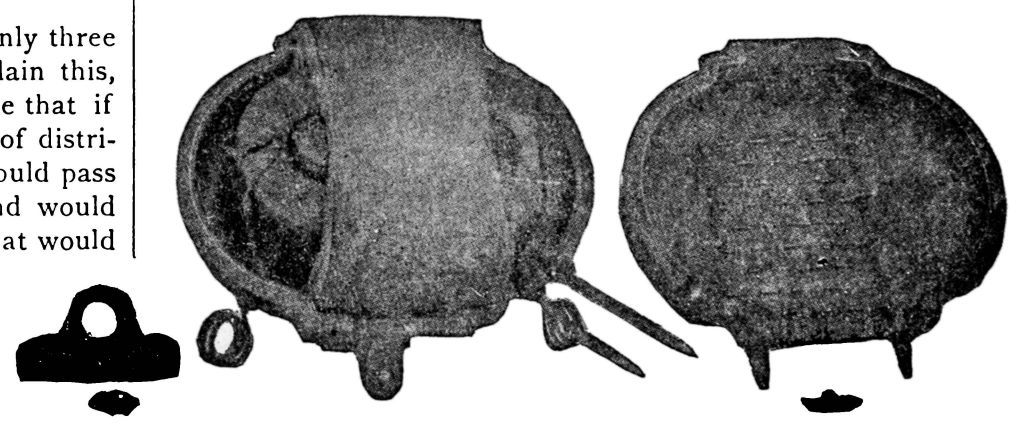

Fig. 3602.

All things considered, the alternating current motors are not as yet equal to those of the continuous current type. The latter can be used for any purpose for which power is required; they can be made to run at constant or variable speed and can start with or without a load. They are complete within themselves, and the only thing in which they are inferior to the alternating current machines is that they require a commutator, and thus are somewhat more liable to get out of order. The alternating current motor, while more simple and substantial from a mechanical point of view, possesses the disadvantage that it will not start up under as heavy a load as the continuous current machine, even if it is of the rotary field type. If of the synchronous type, it has the further disadvantage that it will not start at all unless provided with mechanical complications, and will not run without being supplied with a continuous current for magnetizing the field. These motors can be made to supply their own field current, and to be self-starting, but to do this they require a commutator, and are thus rendered just us complicated in construction as the continuous current motors.

TRANSFORMERS.

A STATIONARY or static transformer is an apparatus by means of which a current of one voltage can be used to induce a current of another voltage, either higher or lower than that of the operating current. The first or operating current is called the primary current, and the induced current is called the secondary. The principle upon which currents are induced in stationary transformers is the same as in generators, namely, by

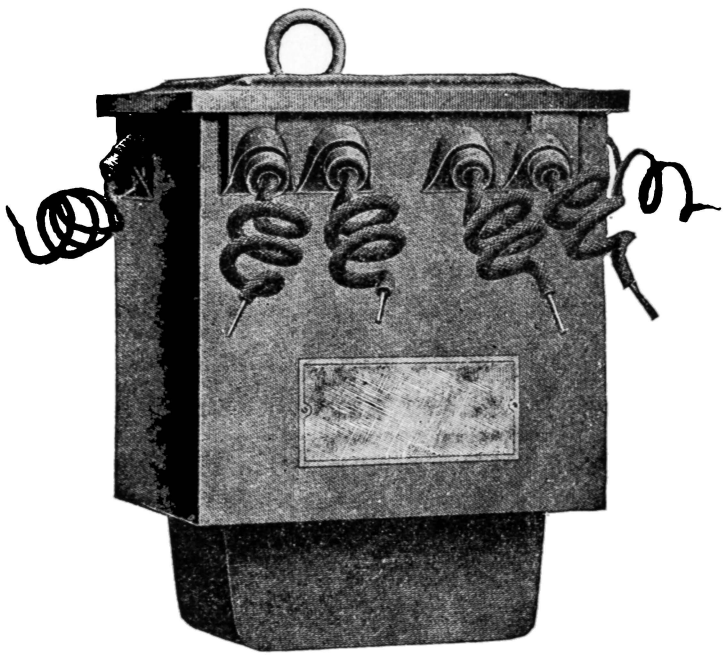

Fig. 3603.

the cutting of the lines of force of the magnetic field. The actual difference between a generator and a transformer is, that the former produces the cutting of the lines of force by means of a moving part, while in the latter the cutting is accomplished by imparting motion to the lines of force themselves, and thus without requiring the movement of any part of the apparatus.

Stationary transformers can only be made to operate with alternating currents because it is only by these that the lines of

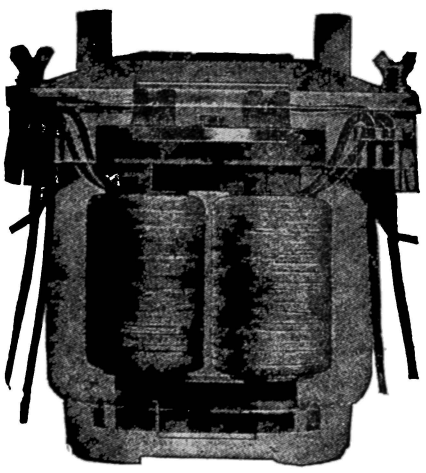

Fig. 3604.

force can be set in motion. The manner in which a transformer induces currents can be explained in connection with the diagram, Fig. 3599.

In this diagram M represents a ring made of iron, well laminated, and P and S represent wire coils. The coil P is called the primary, and is the one through which the current that actuates the device is passed. The coil S is called the secondary, and is the one in which the current is induced. Now consider what will occur if the current flowing in P is of the alternating type. When this current has its maximum value, the iron ring M will be magnetized to its greatest strength, and when it is zero, the magnetism in M will be zero. Now when the magnetism is the greatest, there will be a large number of lines of force in the ring ; but when the magnetism is zero, there will be none. Since, then, the number of lines of force will alternate from a maximum down to zero, it is clear that the only way we can explain their appearance and disappearance, remembering that lines of force are closed curves, is by saying that they shrink upon the primary coil as they begin to disappear, and swell out from it as they increase in number. In this way we can say that at the instant when the magnetic strength is zero, the line of force marked *a* will be next to the side of coil

Fig. 3605.

P and so will all the other lines *b c d*. As the magnetism grows, these lines will swell out until they occupy the position of *a*, but in doing this they will cut through the side of coil S and thus induce therein an electromotive force. From this we see that while the coil S remains stationary the lines of force sway back and forth over it, and each time they move in one direction or the other they induce electromotive forces in corresponding directions, hence the currents induced in S will be alternating, and the current supplied to P must also be alternating ; for if it were not, the magnetism of M would not change, and therefore there would be no movement of the lines of force.

The foregoing explains, in a simple manner, the principles

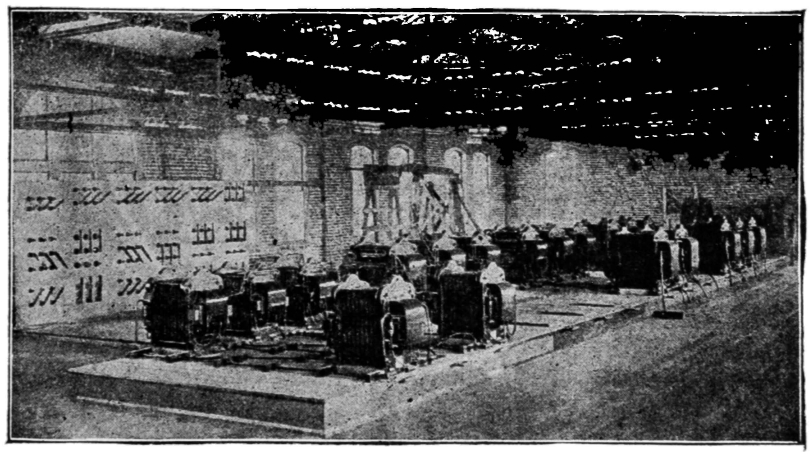

Fig. 3606.

upon which the stationary transformer acts ; but the diagram is not a true representation of these devices as actually made. Sometimes the primary and secondary coils are wound separately, one on each side of the ring M ; but as a rule each coil is wound partly on both sides, and the primary is placed under the secondary.

Transformers are used to induce secondary currents of a higher or a lower voltage than the primary. When alternating currents are used for supplying lights from central stations, the primary current is generated at a voltage of one or two thousand and transmitted over the line wires to the points required

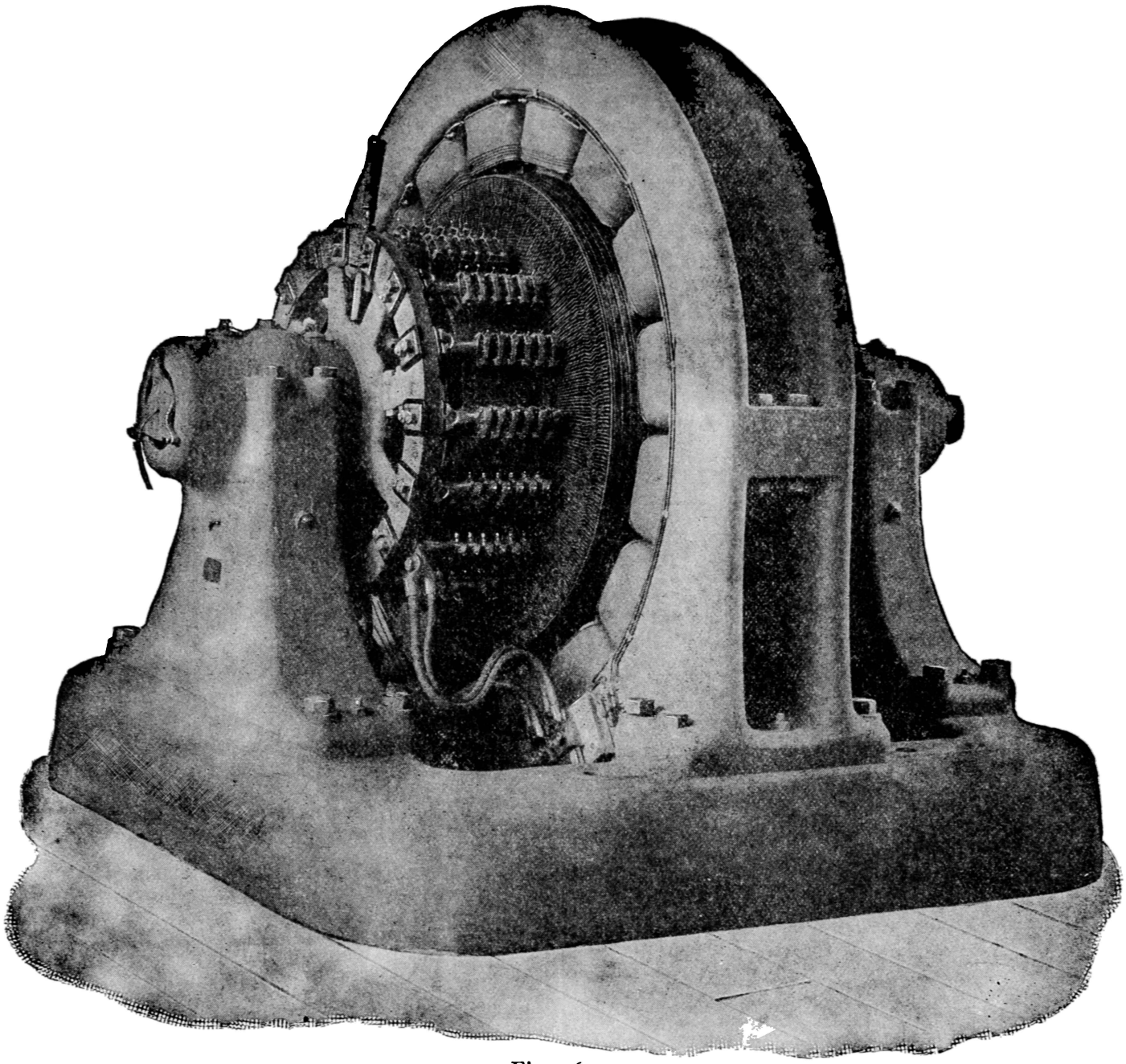

Fig. 3607.

to furnish the lights. This voltage is entirely too high for safety or for successful use in the operation of incandescent lights, therefore it is passed through a stationary transformer, and from the tranformer a secondary current is drawn, which is generally of fifty volts. This current is used to operate the lights.

When the power of waterfalls is transmitted to distant points by means of electricity, alternating currents are used. Now, the higher the voltage the smaller the number of amperes for a given amount of power transmitted ; therefore it is customary to use the highest voltage that is considered admissible, considering all the

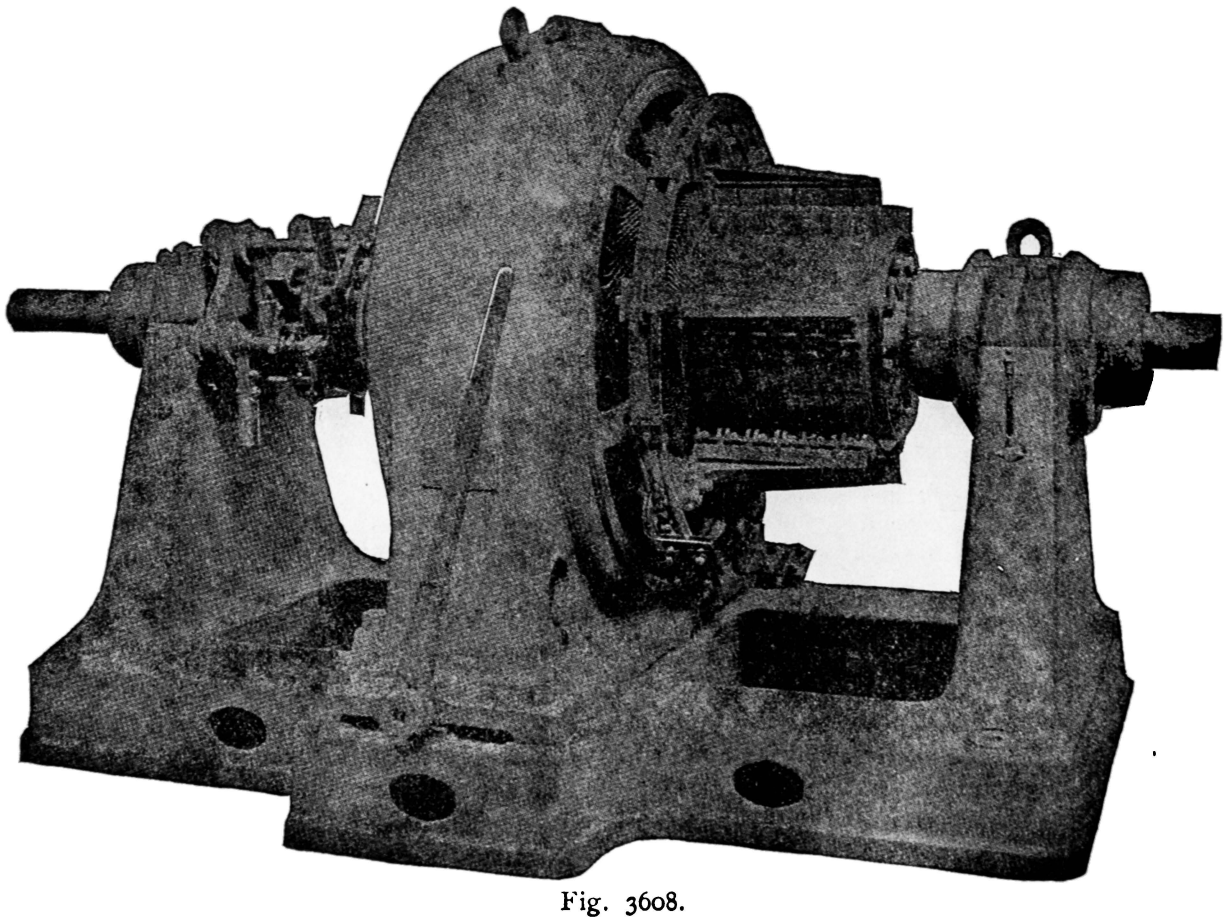

Fig. 3608.

conditions of the particular case. This voltage may be so high that it would not be safe to construct the generators so as to develop it, on account of the great liability of burning out the insulation. In such cases the generators deliver the current at what is thought to be a perfectly safe voltage, and this current is used as the primary of a transformer in which a secondary of much higher voltage is induced. Generally the primary current in installations of this kind has a pressure of about 1,000 volts, while the secondary is 10,000 and sometimes as high as 30,000 volts. The transformers used for this kind of work are called step-up transformers, as they increase the voltage. Those used for delivering a secondary of lower voltage than the primary are called step-down transformers.

The construction of actual commercial transformers can be understood from Fig. 3600, which shows an apparatus of the same design as the diagram Fig. 3599. It will be noticed that there are six ends of wire coming from it; the two that are curled up are the ends of the primary, which is wound on the two sides of the iron ring, and the two coils are connected, thus forming a single one with one end coming out at each side. The four straight ends

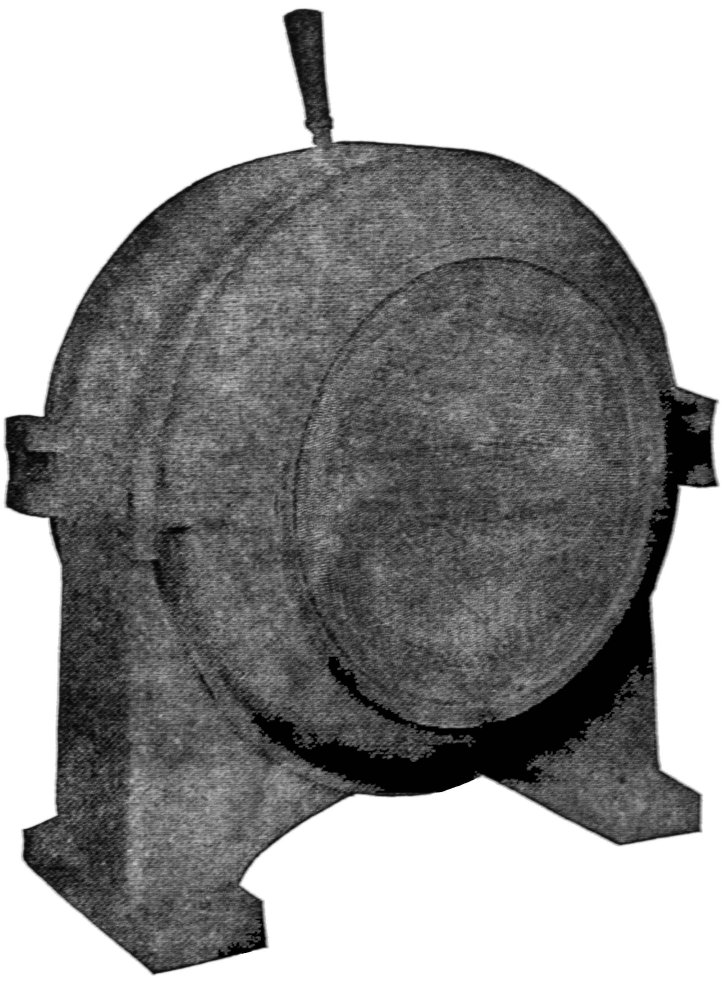

Fig. 3609.

come from the secondary coils, the two ends of each half coil being brought out so as to give two currents or to be joined in one as desired.

Fig. 3601 shows the external appearance of a transformer of which the internal construction is as is shown in Fig. 3602. In this case it will be seen that the wire is within the iron. This change does not in any way affect the principle of operation, and the style used is more a matter of taste than anything else.

Figs. 3603, 3604, and 3605 show the general appearance of several makes of transformers now upon the market.

All these transformers so far shown are of small size such as are used for the distribution of lights, their capacity ranging from ten incandescent lights up to one or two hundred. With very few exceptions, all the transformers of this size are of the step-down type; those used for stepping up the voltage are very much larger, and range from 50 to 500 or more horse-power.

In Fig. 3606 is shown a number of step-down transformers of large size used to cut down the voltage of the line current used in transmitting the power of a large waterfall to a distance of over twenty miles. At the sending end of the line the current is stepped up by similar transformers which are wound to raise the voltage instead of lowering it.

If a transformer is to deliver a secondary of lower voltage than the primary, the secondary coil is wound with larger wire than the primary and with a smaller number of turns. If the secondary voltage is to be the highest, then the secondary coil is wound with finer wire and with a greater number of turns. The difference in voltage is practically equal to the difference in the number of turns in the two coils. Thus, suppose the primary coil has one thousand turns of wire, and that the secondary has only fifty; then if the primary voltage is 1,000, the secondary will be 50. If the

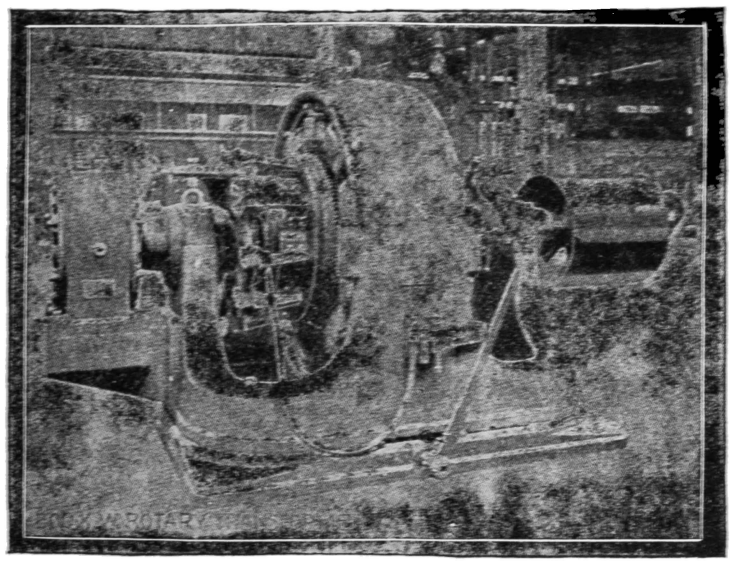

Fig. 3610.

proportions are reversed, the voltages will be reversed in magnitude; thus, if the primary coil has one hundred turns and the secondary five hundred, the voltage of the secondary will be five times as high as that of the primary, and so on for any proportions.

ROTARY CONVERTERS, OR TRANSFORMERS.—The name rotary converter, or transformer, is given to a machine so constructed that it will transform an alternating into a continuous current. Such machines are used in many cases. Suppose that it is desired to operate an electric railway by means of the power of a waterfall several miles distant; then at the falls an alternating current plant will be installed, and the alternating current will be trans-

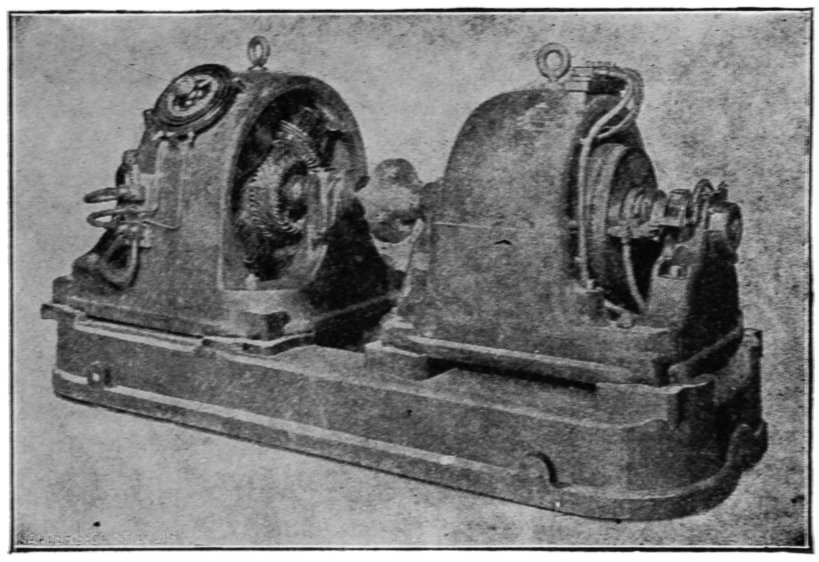

Fig. 3611.

mitted to the place where the railway is located. Now the alternating current cannot be used to operate the railway motors, hence it must be transformed into a continuous current, and to accomplish this a rotary transformer is used. Such a machine is shown in Fig. 3607. This machine is in reality a converter, for it simply converts the alternating current that enters it through one side into a continuous current that leaves it on the other side. The construction is as follows:

The armature is of the same type as those used with continuous current generators, and is wound the same. It is provided with a commutator, which can be seen in the illustration, and a num-

ber of sets of brushes equal to the number of poles. On the opposite side of the machine there are two contact rings, each one being connected with the armature winding at points diametrically opposite. The alternating current enters the armature through these contact rings and passes out as a continuous current through the commutator brushes. A portion of this current from the brushes is passed through the field coils, thus magnetizing the machine. From this explanation it will be seen that the current that comes out through the commutator is the same current that enters through the contact rings, the only difference being that in passing through the armature it has been rectified.

Figs. 3608, 3609, and 3610 represent different types of rotary transformers, the difference being mainly in appearance and made by different firms.

In Fig. 3611 is shown a machine made by the Wagner Electric Company, which is entirely different in its action. This machine consists of a rotary field motor and a continuous current generator both mounted upon the same shaft. The motor receives the current from the alternating mains and the power it develops drives the generator which supplies continuous currents.

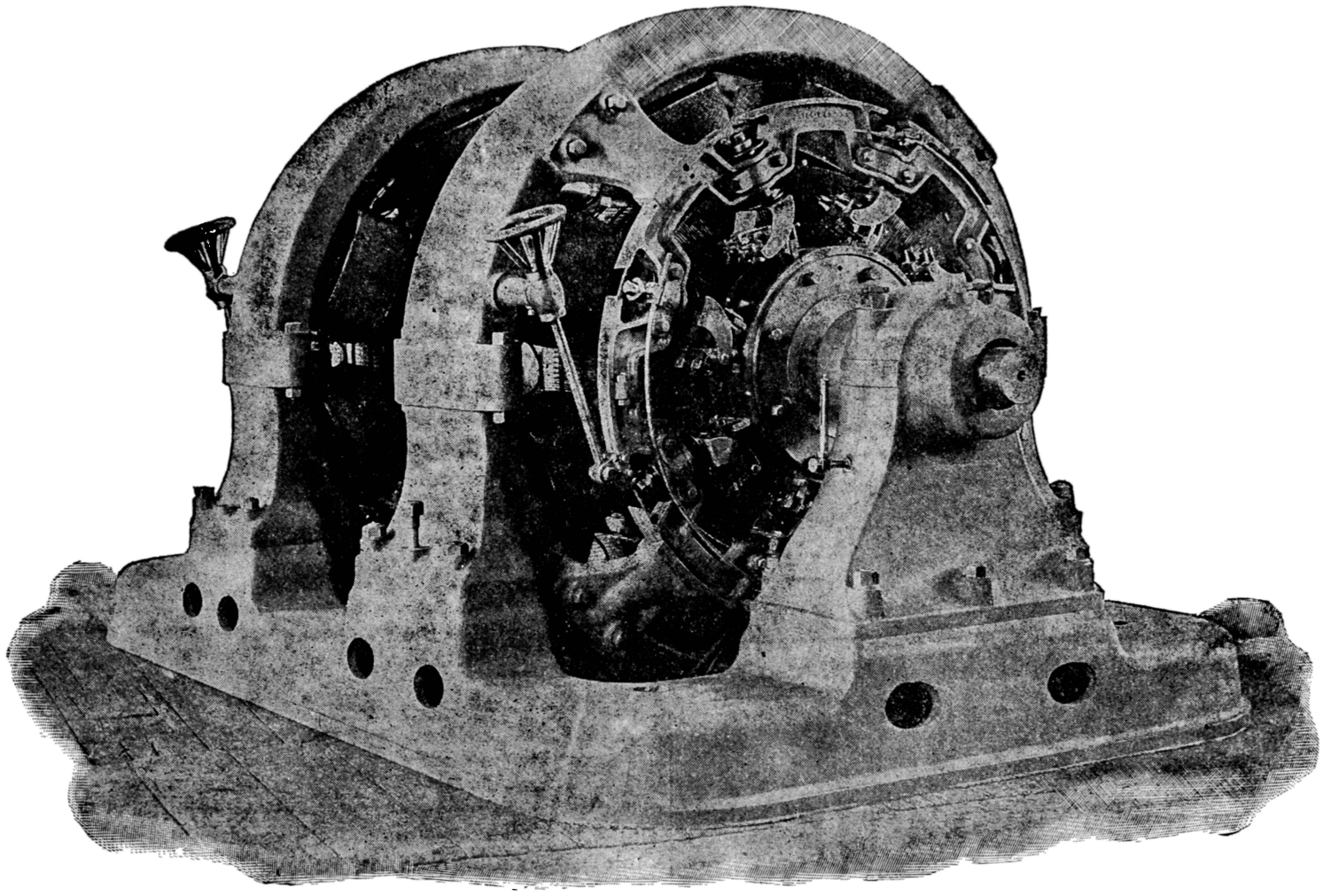

Fig. 3612.

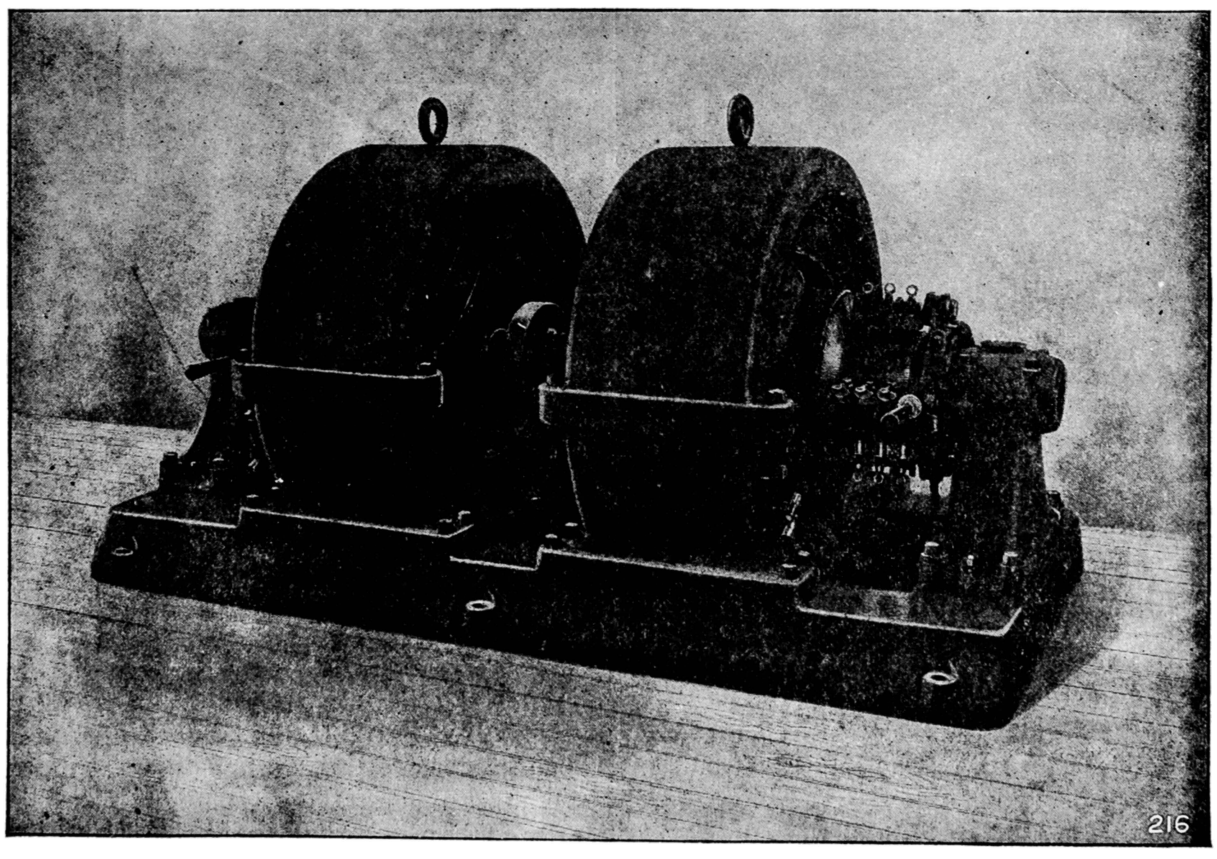

Fig. 3613.

CONTINUOUS CURRENT BOOSTERS.—When a current is transmitted over a considerable distance, the loss of voltage in overcoming the line of resistance becomes so great that means have to be provided for increasing it again. This is accomplished by

means of machines called boosters. Two of these machines are shown in Figs. 3612 and 3613, the first being made by the Walker Company and the second by the Crocker-Wheeler Company. The way these machines act is as follows:

A portion of the current flowing in the line passes through one of the machines and drives it as a motor. The power of this motor drives the second machine, and through this the whole line current is passed. The second machine is nothing more than a generator, and what it does is to induce an electromotive force, which is added to that of the line current. Suppose the line current has a voltage of 450, and that it is desired to increase it to 550; then the booster is so proportioned that the armature of its generator will develop an electromotive force of 100 volts; then as the line current enters it at a voltage of 450, it will leave at 550, being increased by the voltage induced in the armature. This increase in voltage can only be obtained by the expenditure of power, and on this account the motor is required. As the actual power in the current cannot be increased by this process, it follows that the voltage is increased at the expense of the current strength, so that the current that enters the machine is greater in amperes than that which leaves it, but the latter is higher in voltage.

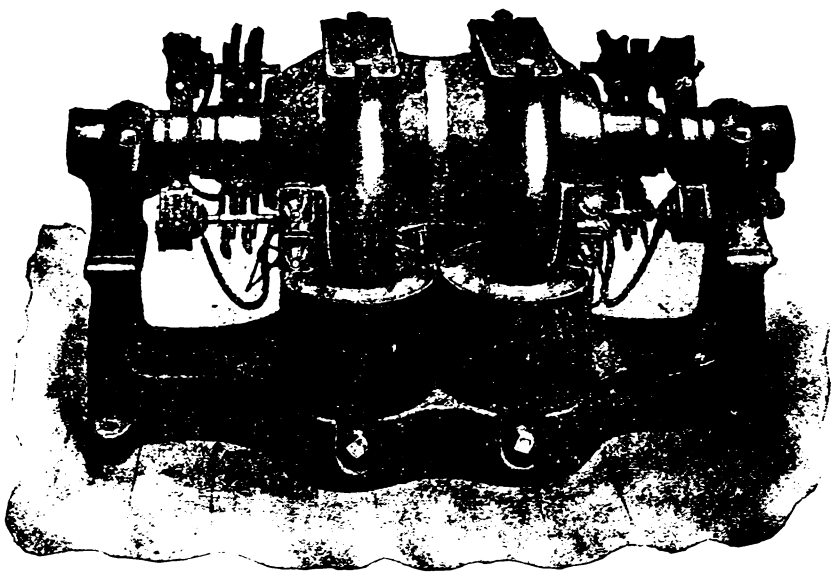

Fig. 3614.

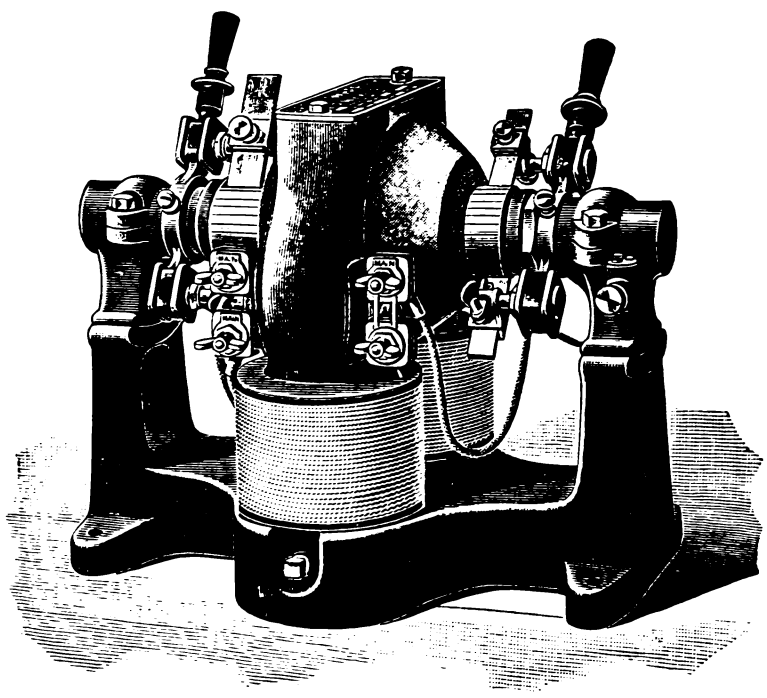

Fig. 3615.

There are other machines, substantially the same in principle as the boosters, that are used for various purposes. One of these is called motor dynamo, another dynamotor.

A motor dynamo is shown in Fig. 3614, and, as will be seen, it is almost the same in construction as the boosters we have shown, with the exception that it consists of two two-pole machines instead of two multipolar ones. The principal difference between a booster and a motor dynamo is in the size; in fact, it is the only difference. Both are used for the same class of work, except that one does it on a large scale and the other on a small scale. Motor dynamos are also used to generate a current that is independent of the main line, and when so used they cannot be properly called boosters, for they do not boost; they generate a new current. When so used, they are called continuous current transformers.

A dynamotor is shown in Fig. 3615. The difference between this machine and the motor dynamo is that the same armature is used to act as a motor and a generator armature. It accomplishes this by having two independent windings and two separate commutators. Through one of the windings the operating current is passed. This sets the machine in motion as a motor, and then the other winding acts as a generator and develops a current which is independent of the operating current.

Motor dynamos and dynamotors accomplish the same thing, but are different in their construction.

ARC-LIGHT DYNAMOS.—In the early days of the electrical development the arc-light dynamo was very prominent, owing to the fact that more was being done in that field than in any other. At the present time the situation is very much changed; arc lighting is but a small portion of the electrical business, and, as a result, the arc-light dynamo has almost been lost sight of. Only a few of the numerous manufacturers of such machines remain in the market, but these have improved their apparatus, so that the arc dynamos of to-day are far superior to those of ten years ago.

Fig. 3616 shows one of the well-known machines of this class, and is manufactured by the Fort Wayne Electric Corporation. As we have already explained, machines that are required to develop a current of constant strength cannot be made to regulate by the manner in which the wire is wound upon them. Now arc-light machines are of the constant current type, hence the regulation is obtained by means of mechanical devices. Such devices can accomplish the desired result either by increasing or decreasing the magnetic strength of the field, or by varying the number of active wires upon the armature. In the machine shown in the figure the regulation is effected by rendering more or less of the armature wires ineffective.

The regulating apparatus is located on the side of the end frame of the machine, directly over the shaft bearing, and is clearly shown in the illustration. It will be noticed that there is a round belt running from a pulley on the end of the shaft to the gearing at one side. By this means the first shaft in this train of gears is kept in motion all the time, but it does not impart motion to the balance of the mechanism until a clutch is thrown into action, and this clutch is controlled by the magnet shown at the upper right-hand corner. This magnet is energized by the whole current of the dynamo, and when this becomes too weak, it causes the magnet to act in such a way as to set the gearing in motion in the direction required to increase the current. If the current becomes too strong, the magnet acts in the opposite direction. The train of gearing acts upon the brushes that rest upon the commutator, moving them in one direction to increase the current and in the other to decrease it. Thus it will be seen that the current is maintained constant by shifting the position of the brushes. There are four brushes, instead of two as ordinarily used, and the mechanism not only rotates these brushes, but changes the distance between those of the same set, so that the current is varied, partly by short circuiting some of the armature wire and partly by causing the electromotive force induced in some of the turns to react against that induced in the others.

In Fig. 3617 is shown the Brush arc dynamo. In this machine the regulation is effected by varying the strength of the field magnetism, and it is accomplished by the apparatus seen directly under the commutator. This apparatus, as in the case of the Fort Wayne machine, is kept in motion by a belt running over a pulley attached to the end of the shaft between the commutator and the bearing. Within the box, directly back of the grooved pulley, is located a resistance, and this is cut in or out of the circuit by means of a switch lever that swings around a dial on the outside of the box. This switch is moved by the grooved pulley, but the latter can only impart motion to it when engaged in the proper direction by the action of a magnet located opposite the lower

part of the box. This magnet throws the gearing into action so that the motion of the pulley may rotate the switch arm in whichever direction may be necessary to effect the required change in the current; that is, either to increase or decrease it, as the case may require.

From these two examples it will be seen that although arc-light machines cannot be made self-regulating by the manner in which they are wound, the mechanism employed to accomplish the result is far from being complicated, and it may be added that it performs its work very effectually.

ARC LAMPS.—Originally arc lamps were made to be operated by currents generated by continuous current dynamos, like the two just described ; but within the past few years they have been constructed so as to operate with constant potential, and also with alternating currents. The regulating mechanism required for the three types is entirely different in principle of action, although not radically different in appearance. When arc lamps are operated from a regular arc dynamo, they are connected in the circuit in series—that is, the whole current passes through all the lamps in succession ; but when operated by a constant potential or alternating current, they are connected in parallel—that is, each lamp is placed in a branch circuit of its own. Regular arc lamps, as we may call them, these being the ones that are operated by arc dynamos, are arranged to burn in the open air; and the carbon rods, being unprotected, oxidize rapidly, so that a single set of carbons will only burn for about seven hours. On this account lamps that are intended for all-night service are made with double carbons.

Fig. 3618 shows the appearance of a lamp designed for street use with a single carbon, while Fig. 3619 is a double carbon lamp of the same kind. Figs. 3620 and 3621 show two ornamental designs for single carbon lamps intended for indoor use.

In arc lamps the carbon rods, by means of which the arc is formed, do not come into actual contact, but are separated by a distance of about one-eighth of an inch in the types of lamp shown in Figs. 3618 to 3621. The current in jumping across this space develops an intense heat. This is what produces the light. The temperature of the electric arc is the highest artificial heat known to be produced, it being sufficient to turn into vapor metals that can only be melted with the greatest difficulty in a blast furnace. This intense heat burns away the ends of the carbon rods, and as the intensity of the light depends upon the distance between these, it becomes necessary to provide means whereby they may be fed together as fast as they are consumed. Many feeding arrangements have been invented, but the most successful ones operate either by what is called the clutch action or the rack and pinion mechanism.

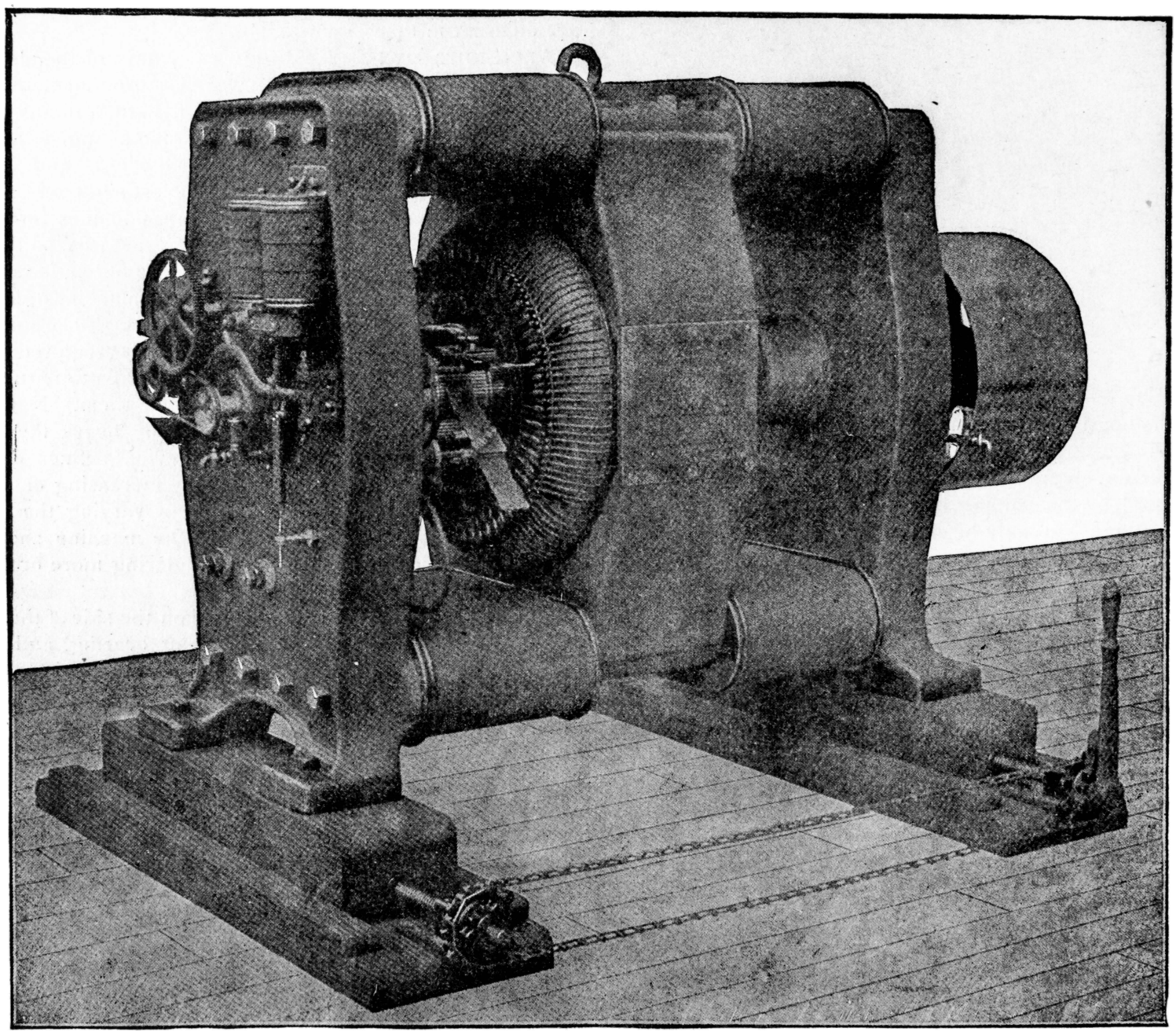

Fig. 3616.

In Fig. 3622 the gear feed mechanism of a double carbon lamp is shown, and in Fig. 3623 the clutch feed mechanism for a single carbon lamp. In Fig. 3622 it will be noticed that the rods, to the lower ends of which the carbons are secured by means of the thumbscrews shown, are provided with racks. Into these racks pinions are geared, and these connect with trains of gearing that, when released, allow the rods to feed downward. The gearing is held normally from rotating by means of a catch which is under the control of the magnets shown back of the rods. The action of these feed mechanisms is as follows : As the ends of the carbons are burned away by the current, the resistance between them increases, and this causes the strength of the current to reduce. When it drops to a certain point, say five per cent.

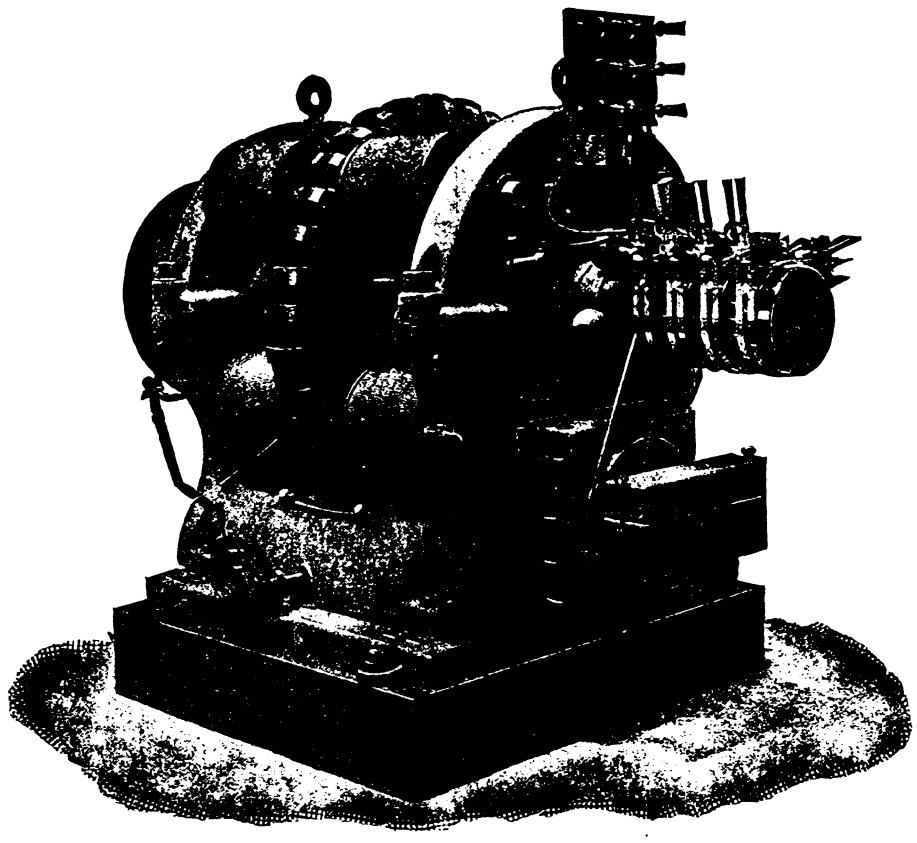

Fig. 3617.

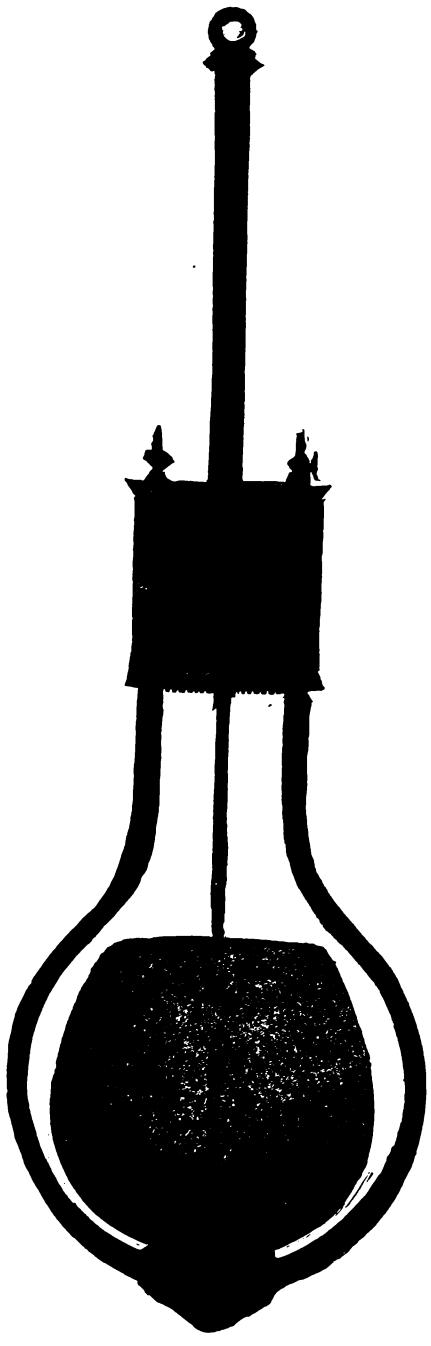

Fig. 3618.

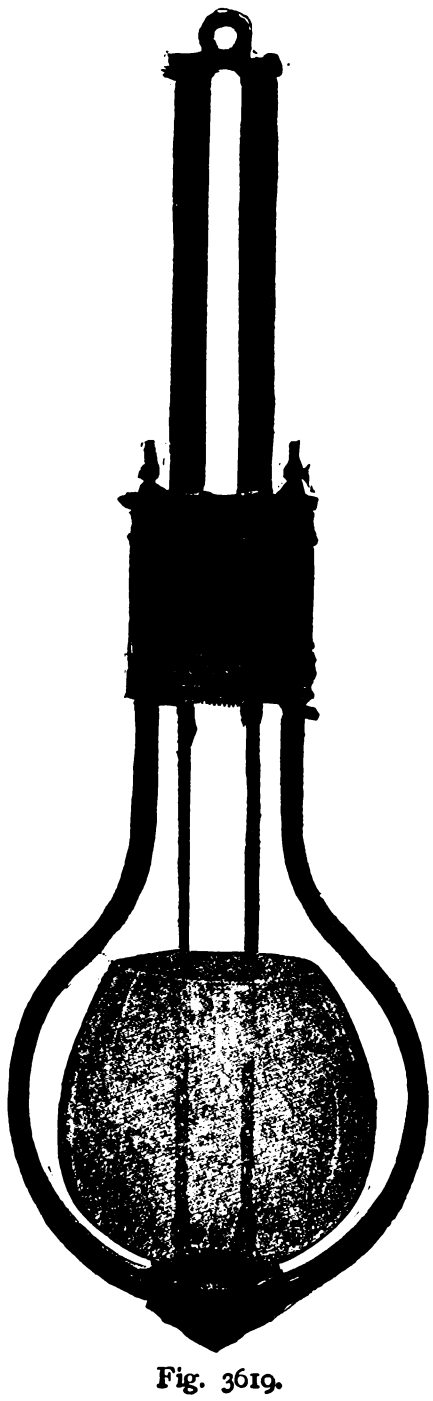

Fig. 3619.

Fig. 3620.

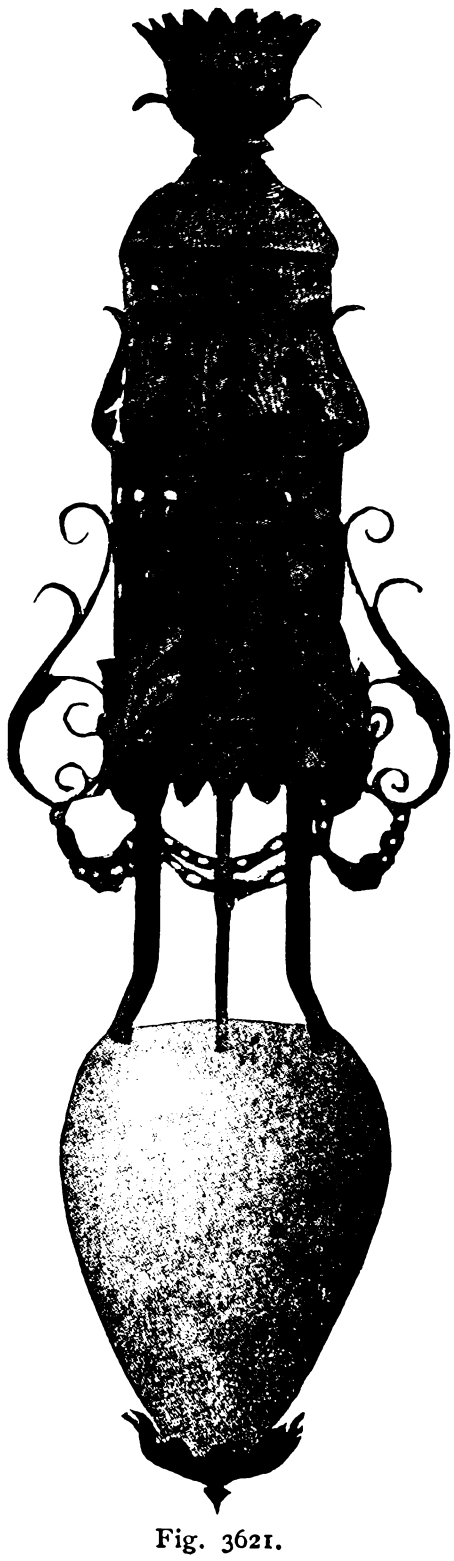

Fig. 3621.

below the average, the magnet becomes so weak that it can no longer hold in place the catch that prevented the gearing from moving; hence the mechanism becomes released, and the upper

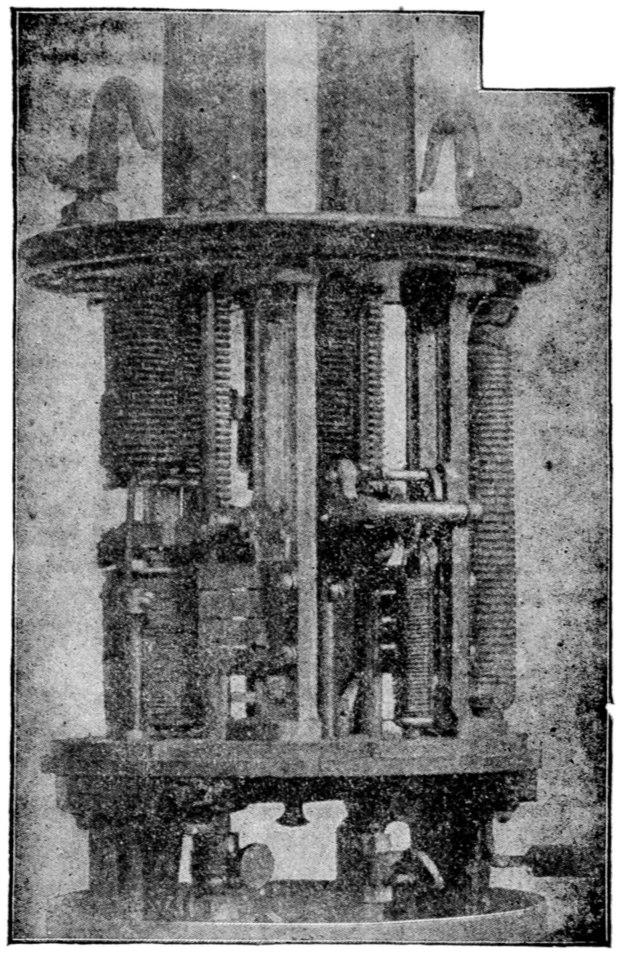

Fig. 3622.

carbon begins to descend. As it descends, the resistance between the ends of the carbons reduces, and, as a result, the current strength increases, finally becoming sufficient to cause the catch

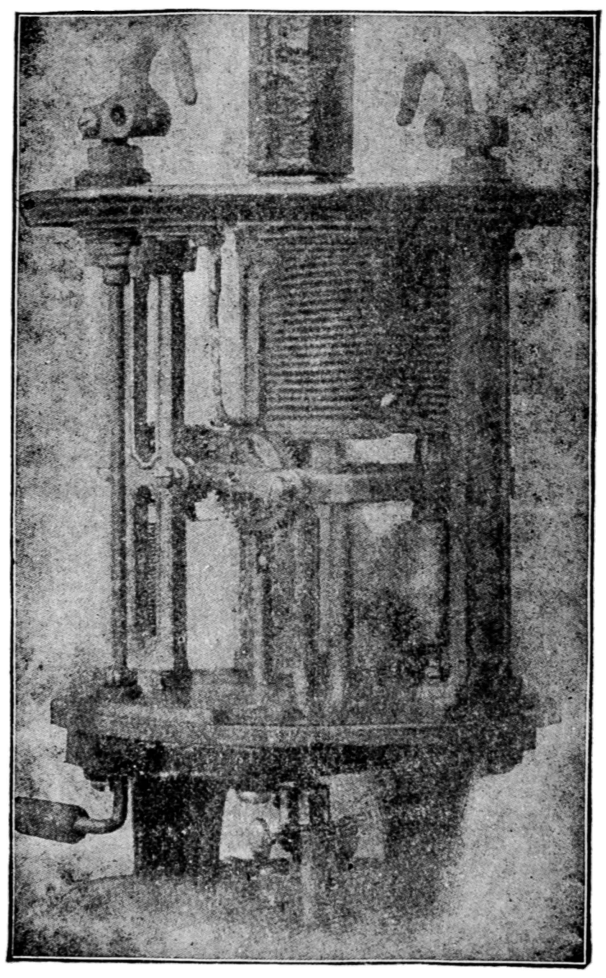

Fig. 3623.

to drop into place again and stop the further movement of the mechanism. The gearing then becomes locked, and cannot move again until the carbons burn away sufficient to require more feeding. If the mechanism is delicate in its action, the carbons will only burn away a small fraction of an inch before the rod will be released and allow the upper one to feed down.

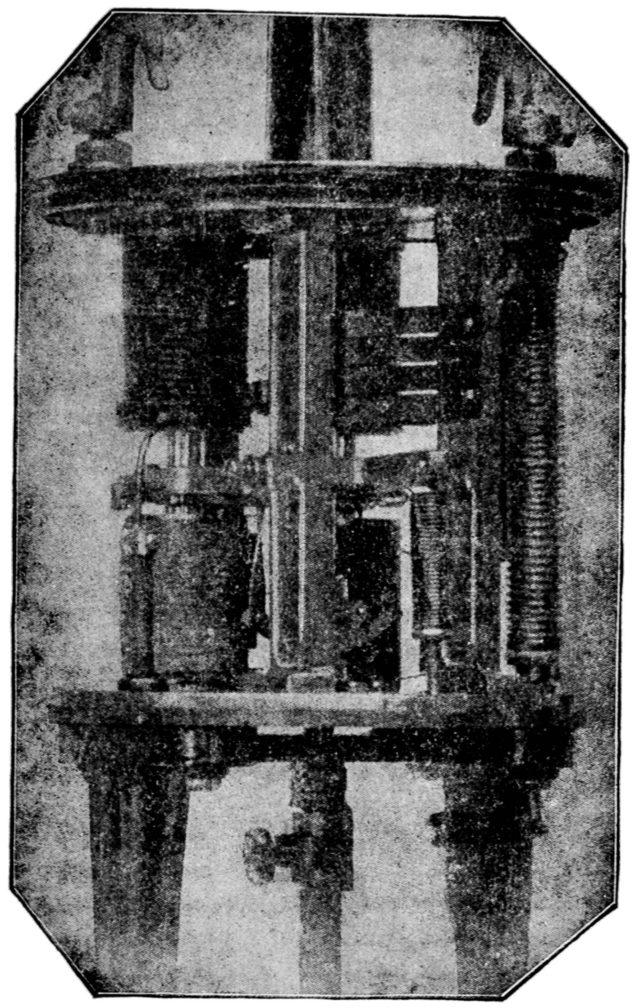

Fig. 3624.

In the clutch mechanism shown in Fig. 3623, the carbon rod is held by a clutch which consists of a washer made with a hole slightly larger than the rod. This washer is supported at one

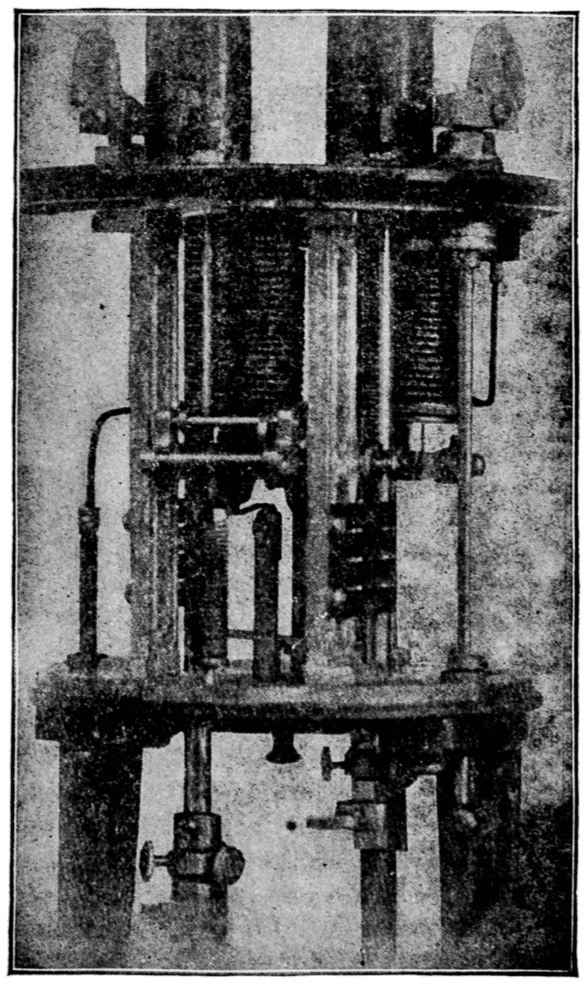

Fig. 3625.

side only, and is, therefore, tilted over out of level, the result being that it grips the rod and does not allow it to slip through. When

the carbons burn away with this feed mechanism, the magnet gradually draws the rod down, and when it reaches a certain point, the clutch washer strikes a stop placed on the side opposite

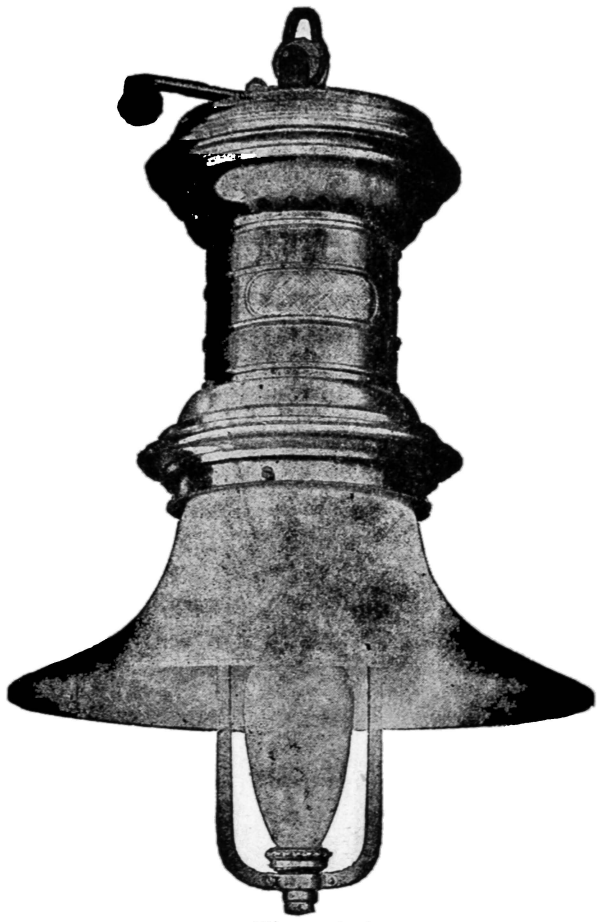

Fig. 3626.

to that from which the washer is held. As soon as the stop is reached, the washer is straightened up, and the carbon rod can then slip through it. As soon as it has slipped through enough to reduce the distance between the rods to the proper amount, the

Fig. 3627.

magnet lifts the clutch washer and causes it to grip the rod again, and to hold it until it becomes necessary to feed the carbon again.

In Figs. 3624 and 3625 are shown the feed mechanisms for single and double carbon lamps designed to be operated by alternating currents. The mechanism in these lamps is similar to that just described, with the exception that it is somewhat simpler, and that the magnets are of different construction. In the lamps intended for continuous currents supplied by an arc dynamo, the magnets are what are called differential magnets, this name being given because they are wound with two separate wires that act in opposition to each other. One of these wire coils acts to pull the rod down and the other to pull it up ; and as the distance between the carbon points increases, the down-pulling magnet coil increases in strength and finally overpowers the other, thus allowing the rod to descend. In alternating current lamps only one coil is wound upon the magnet, that is, only one wire ; there may be two coils, but these are connected so as to actually amount to only one. For continuous currents, regular electro-magnets can be used ; but for alternating currents they cannot, because, as the current changes its direction so often, the iron core does not get a chance to become fairly magnetized before the reverse current demagnetizes it. With alternating currents, the solenoid magnets are used, and these act owing to the fact that, whether the current alternates or not, the iron core is sucked into the solenoid so as to reduce the resistance in the path of the magnetic

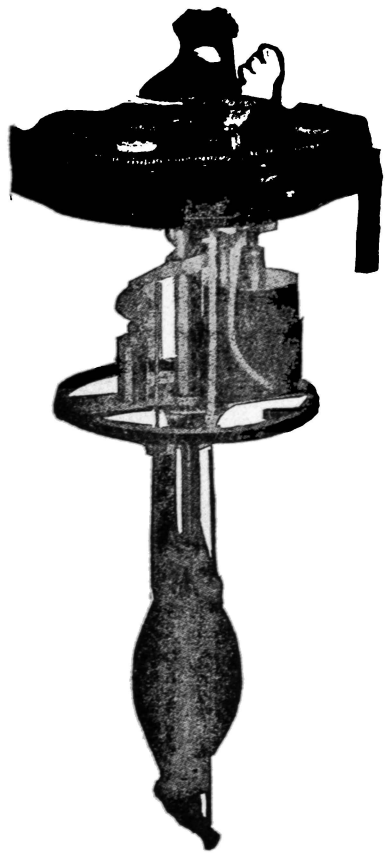

Fig. 3628.

lines of force, which it does on account of the greater magnetic conductivity of iron as compared with air, which we have explained in the early paragraphs of this section of the work.

Most of the arc lamps used on alternating as well as constant potential circuits are made with a small globe surrounding the points of the carbons, and these globes are arranged to fit closely at top and bottom so as to be nearly air tight. As this construction excludes the air, the consumption of the carbons is very much slower ; so much, in fact, that one pair of rods lasts about one hundred and fifty hours, instead of seven as is the case in open globe lamps. Lamps of this type are called inclosed arc lamps. Efforts have been made to use them with the regular arc lamps, but they do not work well, owing to the fact that the ends of the carbons do not burn away as pointed as in the open arcs. With constant potential and alternating current lamps this difficulty can be overcome by increasing the length of the arc, that is, the distance between the ends of the carbons. This cannot be done with the regular lamps, as in that case it becomes necessary to increase the voltage of the current supplied to the lamp and to reduce its strength in like proportion, and if this were done with lamps connected in series, it would require a very much greater electromotive force for a given number, which would be objectionable, as the current would become more dangerous, and at the same time the difficulty of insulating the line wires from the ground

would be much greater. With constant potential and alternating current lamps the arc is about three times as long as with the regular arc lamps, and the voltage, which with the latter is about 45, is increased to 80 or 90.

Fig. 3626 shows the inclosed arc lamp manufactured by the General Electric Company, and from its appearance it will be noticed that it is much shorter than the regular lamp. This difference in length is due to the fact that the feeding mechanism is greatly simplified, as can be seen from Fig. 3628, which illustrates the mechanism of the lamp shown in Fig. 3627. The feed mechanism in this lamp is of the clutch type, and, as will be seen, it consists of a single magnet, which, pulling down on one side, tends to straighten up the clutch, so that the rod may slip through, while the force exerted by the magnet is opposed by a weight on the opposite side which pulls the clutch up so as to clamp the rod. A dashpot on the side opposite to the magnet prevents the rod from moving too rapidly.

The cuts of inclosed lamps we have shown are not as ornamental as those of the regular type shown in Figs. 3620 and 3621, but they are made in very elaborate designs—more elaborate, in fact, than any others, owing to their being used extensively in places within buildings where the open arc lamps would not be allowed on account of the danger of the sparks, that occasionally fly out of them, setting fire to inflammable objects near by.

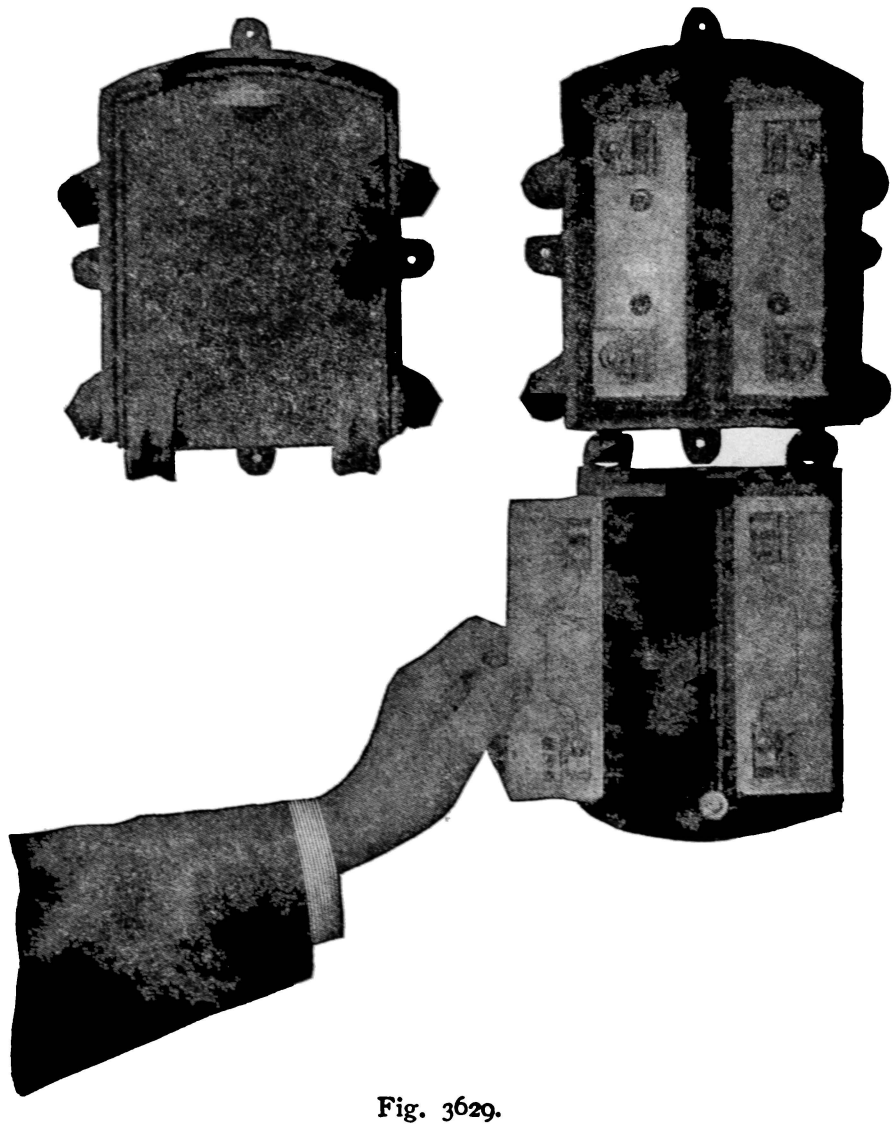

Fig. 3629.

SAFETY FUSES.—Safety fuses are simply devices to open the circuit when the current becomes too strong from any cause. The principle upon which they operate is that the passage of a current through any conductor develops heat therein and that the amount of heat is proportional to the strength of the current. Whatever be the size of a wire, if the current is sufficiently strong

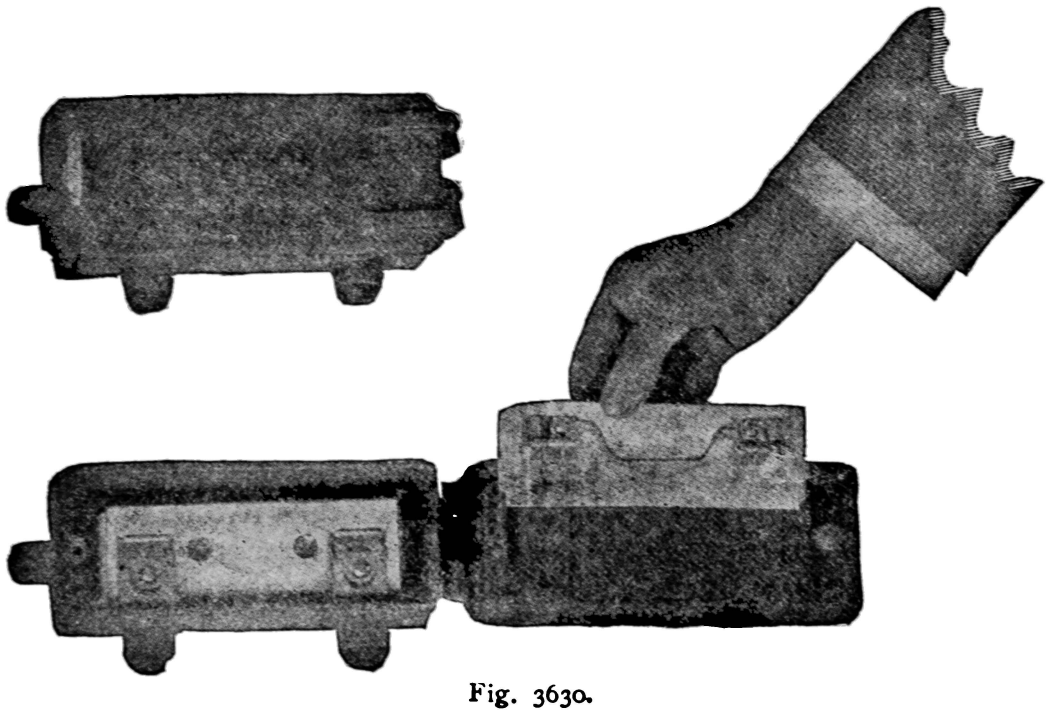

Fig. 3630.

it will heat it up to the melting point, even if it is made of steel or some other metal that requires a high temperature to fuse it. The material most generally used for fuses is lead or some soft metal alloy which melts at a low temperature. The only object in using such a metal is that when it does melt, the drops of molten metal, should they fall upon inflammable material, will not set it on fire. Safety fuses are designated as single pole and double pole according to whether they are arranged to break the circuit on both sides of the generator armature or only on one. If

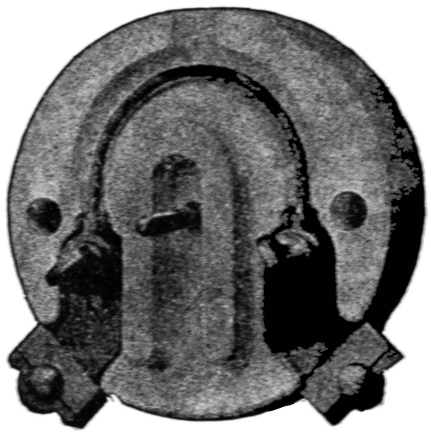

Fig. 3631.

Fig. 3632.

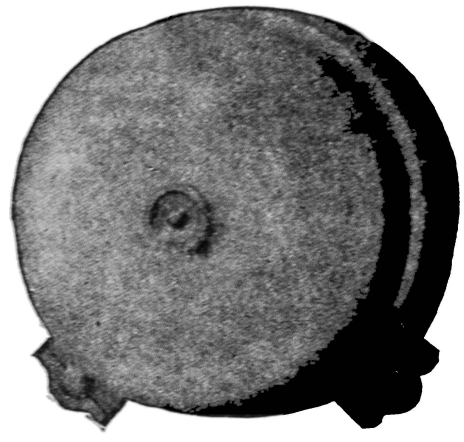

Fig. 3633.

a piece of wire that is so small that it will be melted by a current of the capacity that it is expected to act with, is connected in circuit with one of the wires leading from the brushes of a generator, it will be a single-pole safety fuse. If two such wires are connected, one to each of the wires leading from the brushes, the two together will constitute a double-pole safety fuse. As can be readily seen, these fuses could be connected in the circuit in the simplest possible manner, and without any specially designed device, but it is more convenient and mechanical to have a regularly con-

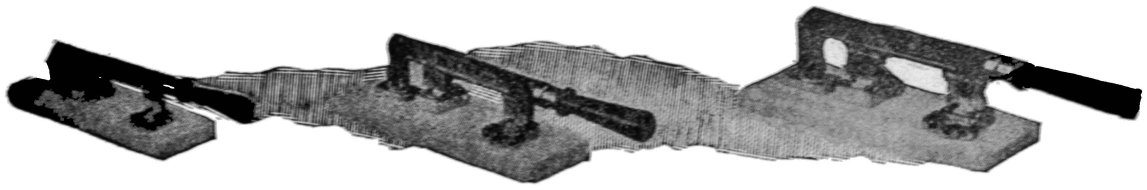

Fig. 3634.

structed apparatus to perform this office. In Fig. 3629 is shown one of the many designs of double-pole safety fuses. The blocks upon which the fuse wires are secured are made of chinaware or porcelain, so as not to be charred when the fuse is melted. In this design these blocks are made so as to be removed when it is desired to renew a fuse. This is a convenience, but not a necessity. The manner in which the fuse wires are put in place is clearly shown in the illustration, and it is only necessary to add that the line wires are attached to the contacts to which the ends

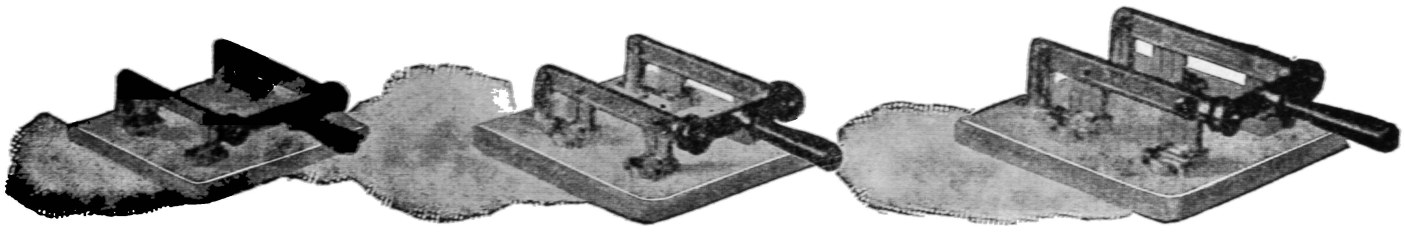

Fig. 3635.

of the fuse wires are secured. The whole current of the generator, or of the branch of the circuit that the fuse protects, passes through both of the fuse wires.

Fig. 3630 shows a single-pole safety fuse made by the same concern, and, as in Fig. 3629, the manner in which it is connncted in the line is at once apparent. Figs. 3631, 3632, and 3633 show a simple design of single-pole fuse, the first two figures showing the device open, the third showing it closed.

SWITCHES.—Any device that will enable us to change the course of a current from one path to another, or to stop the current entirely by opening the circuit, is a switch. From this explanation it will be seen that such devices can be made in almost numberless forms; but there are several well defined types of switches, that are required for certain specific cases, that have been classified, and an explanation of them will serve to show, not only how they operate, but also the manner in which currents are handled by means of such circuit controlling or changing devices.

The switches shown in Fig. 3634 are called single-pole single-throw switches, this name being given to them because they can only open the circuit on one side, hence they act upon one pole only. They are single throw because there is only one direction in which they can be moved to close the circuit.

The illustrations in Fig. 3635 are what are called double-pole single-throw switches. They are single throw for the same reason as given in connection with Fig. 3634. They are double pole because they are connected with both sides of the circuit, and therefore act at the same time on both sides of poles. In the single-pole switch there is but one lever, and this swings down upon two contacts; these are connected with the ends of the wire, and when the switch lever is down in the position shown in the cuts, the circuit is closed; and when it is raised, the circuit is opened. In the double-pole switches there are two levers, and each one of them is a counterpart of the single-pole switch, hence each one can act upon one side of the circuit. The connection between the two levers, to which the handle is attached, is made of some material that is a non-conductor of electricity, so that there may be no electrical connection between the two sides of the switch. When the handle is pressed down, as in the illustration, the circuit will be closed; but when it is raised, the circuit will be open, and on both sides, that is, both poles will be disconnected.

The switches shown in Fig. 3636 are called double-pole double-throw switches. They are double pole for the reason explained in connection with the last figure, and they are double throw because when the handle is thrown into the position shown in the cuts, the circuit will be connected in one way; and when thrown over to the opposite side, so as to engage with the contacts seen beyond the points where the levers are pivoted, the circuit will be connected in another way. To illustrate this, suppose that the contacts next to the pivot points are connected with the two wires

leading from the generator, and that the two outside contacts in front of the pivots, and with which the levers are shown in contact, connect with one external circuit, while the two shown at the back of the switchboard are connected with the terminals of another external circuit, then it is clear that, if the switch handle is turned in the direction shown, it will connect the generator with one external circuit, and if it is thrown in the opposite direction, it will connect the generator with another external circuit.

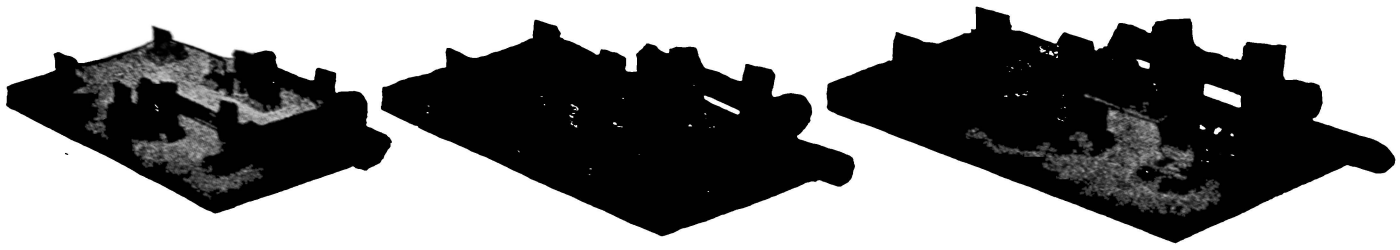

Fig. 3636.

It is on this account that switches of this type are called double throw, because by being thrown in opposite directions they can connect the generator with different external circuits. From this it will be seen that there can be three, four, five, or any number of throw switches.

For some purposes it is desirable to have the switches so made that when they are opened the movement may be as rapid as possible ; this result is accomplished by the use of a spring, so located that it will hold the switch closed until the handle has been

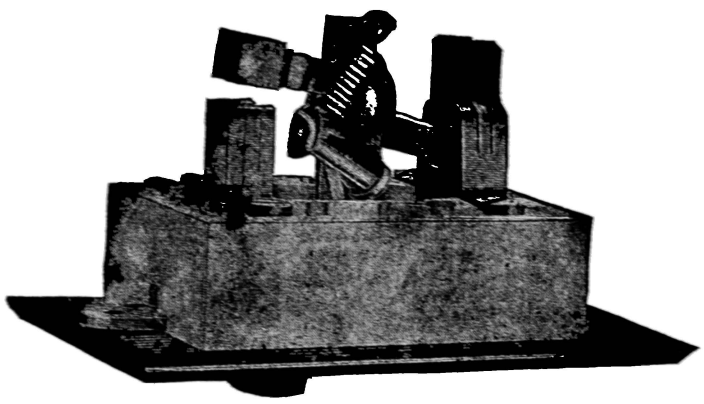

Fig. 3637.

moved beyond a certain point, and then the force of the spring will act to open the switch and will move it almost instantaneously from the closed to the open position. A switch of this type is called a snap switch, and one of the numerous designs is shown in Figs. 3637 and 3638, the first showing the open position and the second the closed. The switch lever rocks upon the centre pivot, and the part to which the upper end of the spring is attached is connected with the handle. When the handle is moved far enough, the spring will slide along the lower rod, and as soon as it passes

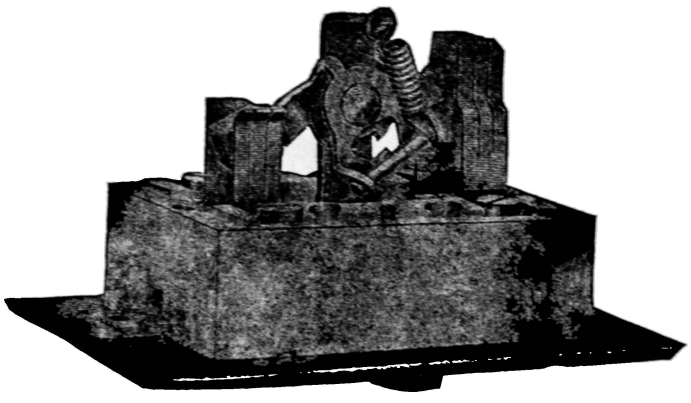

Fig. 3638.

the centre, it will pull the switch lever violently after it, thus making a quick movement of the lever whether to open or close the switch.

MOTOR STARTERS AND FIELD REGULATORS.—A motor starter is an apparatus used for starting a motor. As we have explained, when a motor is started, it is necessary to introduce resistance in the armature circuit so as to prevent the current from rising to a dangerous strength, that is, to keep it from becoming so strong as to burn out the insulation. The simplest form of motor starter is shown in Fig. 3639. This device is connected with the motor and the circuit wires in the manner explained in connection with Fig. 3531. When the lever is in the position shown in the figure, the circuit through the motor is open ; but when the lever is moved so as to rest upon the first contact to the right, the circuit through the motor is closed, with all the resistance of the starter in the armature circuit, and then the motor will begin to revolve. As the machine gains speed, the lever is moved further to the right, passing from contact to contact until the last one to the right is reached, when the motor will be running at full speed and all the starter resistance will be cut out of the armature circuit. With this starter, if the current becomes too strong for the safety of the motor, or if it suddenly dies out, the lever will not move, hence the motor is without protection.

In the motor starter shown in Fig 3640 the lever is provided

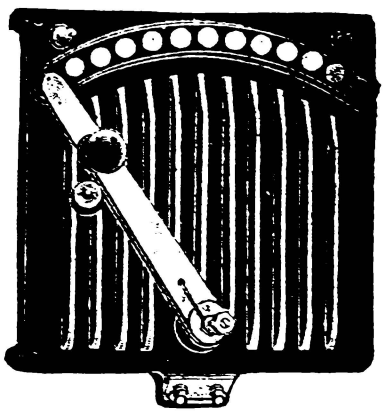

Fig. 3639.

with a spring wound around the pivot upon which it swings, and the tension of this spring acts to throw the lever to the left, or to the stop position. At the right side of the apparatus is seen an electro-magnet, and this is energized by the current that passes through the motor. When the lever is moved to the last contact to the right, it is held in that position by the attractive force of the electro-magnet ; but if the current dies out for any reason, the electro-magnet at once loses its magnetism and can no longer hold the

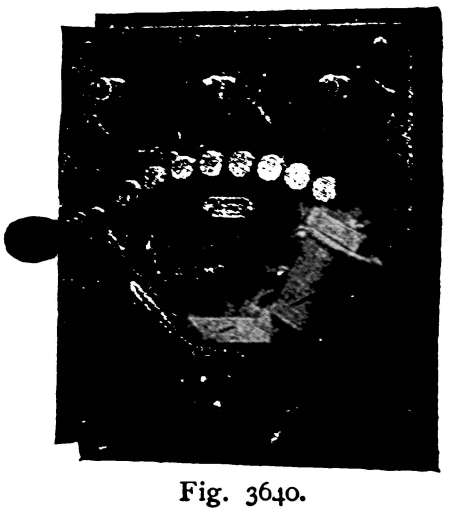

Fig. 3640.

lever against it, hence it will swing around to the left, to the stop position, and thus open the motor circuit ; therefore, if the current starts up again, no damage will be done, because the current cannot pass through the motor. A starter of this type is called an automatic underload starter.

In Fig. 3641 is shown a starter that is provided with two magnets, as can be clearly seen. The one to the right acts in the same

manner as that shown in the last figure; that is, it holds the lever to the right as long as the current is flowing, but lets it go when the current stops. The other magnet is so arranged that when the current becomes too strong, it shuts the current off from the other magnet, and thus the lever is left to be pulled back to the stop position by the tension of the spring. From this explanation it will be seen that if the current stops with this form of starter, the lever will fly to the open position; and if the current becomes too strong, the same effect will be produced, because then the lower magnet acts to cut the current off from the top magnet. A

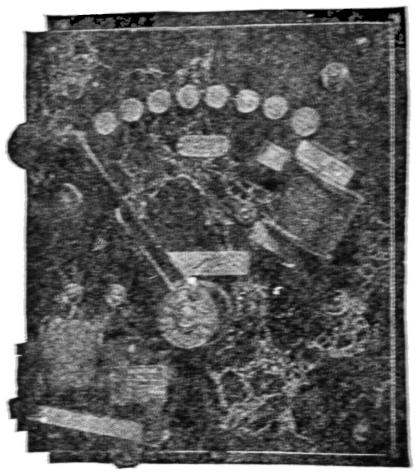

Fig. 3641.

starter of this kind is called an automatic under and over load starter.

Fig. 3642 shows another design of automatic under and over load starter. In this design, the position of the magnets is considerably changed, but they act to produce the same result.

The lever of the starters we have just described is moved by hand, but there are cases where it is not convenient or desirable to move it in this way. For example, if an elevator is operated by an electric motor, the elevator operator could not turn the handle of the starter every time the elevator is stopped or started, and it would not be satisfactory or economical to have a man located by the side of the starter to perform this work. It is clear that in

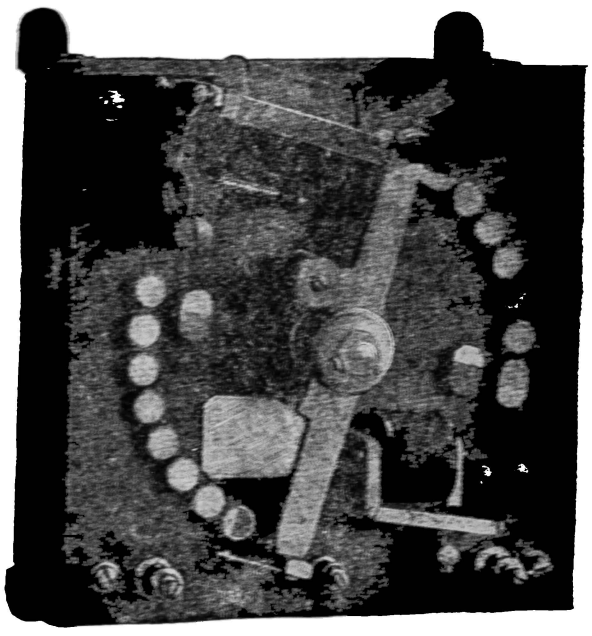

Fig. 3642.

such a case it is necessary to provide a self-acting starter. An apparatus of this kind, manufactured by the Electrical Appliance Company, is shown in Fig. 3643, and it is known as the gravity automatic motor controller. The manner in which it acts is very simple. The elevator hand rope is attached to the upper end of the vertical rod seen near the right side of the apparatus. When the hand rope is pulled, the rod is drawn up, and this motion connects the motor with the line wires with the resistance of the starter in the armature circuit. When the vertical rod is pulled up, it releases the lever that swings over the curved row of contacts shown to the left. The weight on this lever causes it to move downward and thus pass successively over the contacts until the last one is reached, when all the starter resistance is cut out of the armature circuit. The cylinder shown below the swinging lever is a dashpot, and by adjusting the flow of air in or out of it, the velocity with which the lever moves down can be adjusted to a nicety.

Continuous current generators of the constant potential type are provided with a resistance to be placed in the circuit of the shunt field coils, so as to adjust the voltage of the machine. If the voltage is too high, it can be reduced by cutting down the strength of the current that flows through the shunt coils; and if it is too low, it can be increased by increasing the current through these

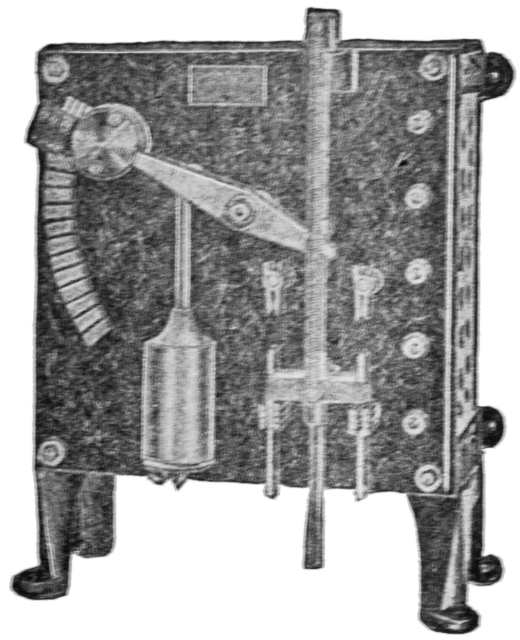

Fig. 3643.

coils. To be able to accomplish this result easily, a regulating resistance is used that is commonly called a field regulator. Such an apparatus is shown in Fig. 3644, and it consists simply of a resistance located within the box, this being divided into many sections, so that when the lever, seen upon the front of the box, is moved from one contact to another, it only affects the voltage slightly. The larger the generator the greater the number of contacts over which the lever swings, so as to make the graduation of the regulation more perfect. If the resistance of the field regulating box is divided into only a few sections, when the lever is

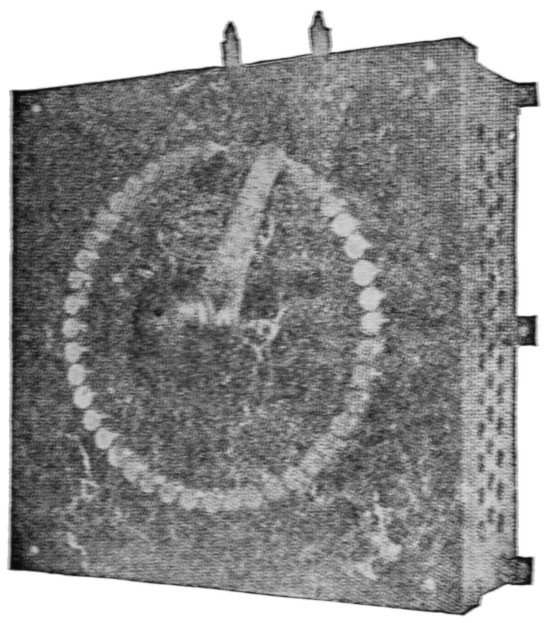

Fig. 3644.

moved from one contact to another the change in the voltage may be much more than is desired. To illustrate, suppose that the standard pressure at which the generator is to run is 110 volts and that it has dropped to 105. Now, if the number of sections in the resistance is so small that adding one will increase the voltage, say, two volts, then it is evident that we can increase the pressure to 109 or to 111, but not to 110. If, on the other hand, the number of sections is so great that adding one will only raise the voltage one-quarter of a volt, then it is evident that we can adjust the pressure to within a fraction of the proper voltage. It is on this

account that it is desirable to make field regulators with a large number of contacts.

The resistance of field regulators and motor starters is generally made of wire or some metal of high resistance, such as iron, German silver, or special alloys. High resistance metals are used, so as to get a large resistance in a small space. The wire is wound in the form of spiral springs, and these are secured in the box in rows, the ends being connected so as to form a continuous wire from end to end. Some manufacturers use, as a resistance, rods made of carbon or graphite. The field regulator, Fig. 3644, is of this type. Other manufacturers use very fine iron wire which is embedded in a layer of enamel baked upon one side of a slab of cast iron; such a resistance is used in the motor starter shown in Fig. 3639.

A resistance used to regulate the flow of current in any electrical apparatus is generally called a rheostat, and on this account field regulators are called sometimes field regulating rheostats, or simply field rheostats. Motor starters are also called motor starter rheostats.

CIRCUIT BREAKERS.—A circuit breaker is a device to open a circuit when the current becomes too strong, its action being controlled by an electro-magnet. From this definition it will be seen that any motor starter that is provided with an overload cut-out magnet is also a circuit breaker; but inasmuch as there are many cases, besides that of motors, in which it is desired that the circuit be opened when the current becomes too strong, it is necessary to have an apparatus that is not a combination with a starter, but that is a circuit breaker pure and simple. The principle upon which circuit breakers operate is readily understood. The general construction of such devices may be described as consisting of a switch which is held in a closed position by means of a catch, which latter is under the control of an electro-magnet. When the current becomes too strong, the magnet pulls the catch out of place and then the switch flies open.

Two different designs of circuit breakers made by the same firm are shown in Figs. 3645 and 3646. They are arranged to

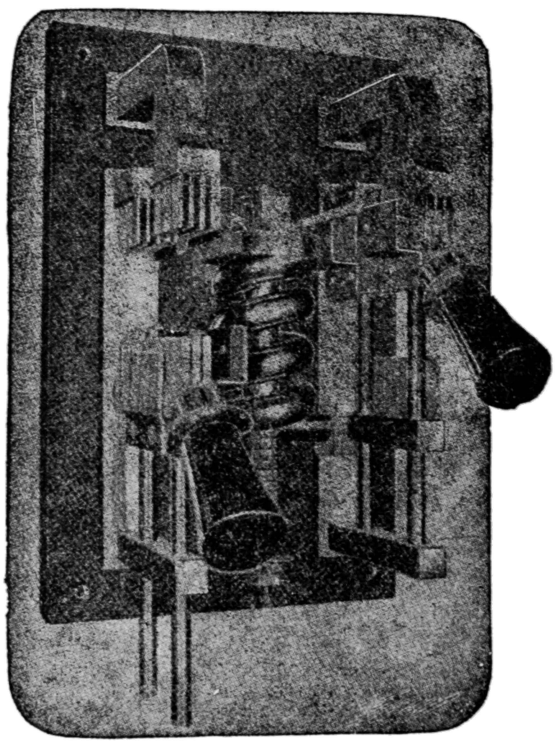

Fig. 3645.

open the circuit on both sides of the line, and on this account are called double-pole breakers, just as safety fuses that open the circuit on both sides are called double-pole fuses. These double-pole breakers are so arranged that one side of the line can be opened at a time, or both, and in Fig. 3645 it will be noticed that the switch on the left-hand side is open, and that on the right is closed. The coil seen between the switches is the electro-magnet. Looking at the switch on the left, it will be noticed that in the lower part there is a rod projecting below the lower guide through which the two vertical rods pass. It will also be seen that there is a catch at the top of the lower portion of the switch. When the handle is raised, the lower part of the switch is forced up into the upper part, as shown in the switch to the right, and at the same time the catch engages in a part of the top half of the apparatus, and thus prevents the switch from dropping to its lower, or open position. When the switch is raised, the rod projecting below the lower guide is forced up into the tube and compresses a spring, hence there is a force acting to push the switch down as soon as the catch is released. The part with which the catch engages is under the control of the magnet, and when the current reaches the strength for which the apparatus is set, the catch is tripped and the switch flies open. Sometimes the increase in current strength is caused by a sudden defect in the insulation of the circuit near

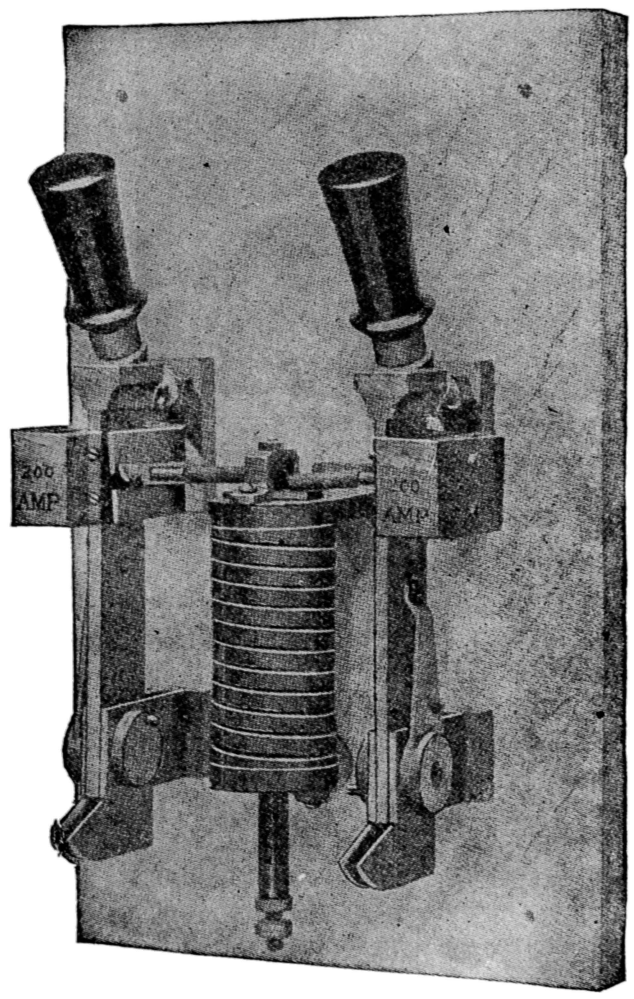

Fig. 3646.

one of the sides of the breaker, and in such a case the current flowing through this route will be sufficient to open this side, while that passing through the other switch might not be enough to affect it. On this account the independent action of the two switches is often very valuable.

The difference in construction between Figs. 3645 and 3646, as will be noticed, is not very great; it consists mainly in the position of the handles.

The circuit breaker shown in Fig. 3647 is a very elaborate affair, and was made for the government. Its principal feature is that there are two sets of contacts, one set being at the bottom and the other at the top. The latter contacts can be seen at the upper corners, the stationary parts being back of the movable ones, which are shown on an incline and are attached to the frame just back of the lever upon which the handle is mounted. The lower contacts are the two bevelled blocks to which the toggle joint is attached, and the corresponding bevel corner pieces. When the handle is raised, it lifts the toggle, and this forces the bevel blocks out against the bevelled corners, and thus closes the circuit through these contacts; at the same time the upper contacts are pushed back into engagement with the stationary parts. When the magnet trips the catch, the first movement of the handle lever allows the lower bevelled contacts to separate before the upper ones do. In this way the final break in the circuit takes place at the upper contacts, and thus the lower ones are saved from injury by the sparking that always ensues when a circuit is opened. For small breakers this arrangement would not pay for the additional expense, but for large currents it will.

Fig. 3648 represents a circuit breaker manufactured by the Cutter Electrical Manufacturing Company; its construction is similar to that of Figs. 3645 and 3646, and is arranged so that it acts if the current on either side becomes too strong, but it does not open the circuit on one side only. It is provided with one magnet, the action of which will open both sides of the circuit breaker. It is of the double-pole type, 250 to 1,500 amperes. Fig. 3649 shows another circuit breaker made by the Cutter Company, but is of the double-pole, double-coil type, of 500 amperes.

Circuit breakers and safety fuses are intended to protect the apparatus in the circuit from excessive currents, but their action is not exactly the same. The fuse operates when the current becomes so strong as to melt the wire, but as it requires some time to heat the metal up to the melting point, it follows that the current can flow at an unsafe strength for several seconds and possibly minutes before the safety fuse will give way and open the circuit. The circuit breaker acts instantly, because the strength of the magnet rises as fast as the strength of the current, hence, as soon as the latter reaches the danger point, the circuit flies open. As the two devices act in a diametrically opposite way, it is not uncommon to protect a circuit with both. When this is done, the fuse is adjusted so as to act with a current lower than that for which the circuit breaker is set. With this arrangement, if the current rises to the fuse limit, it will not affect the breaker; but if it does not reduce in strength, it will, after a short interval, melt the fuse and open the circuit. If the current rises suddenly far beyond the fuse limit it will not melt it, but it will cause the breaker to act. Thus it will be seen that the breaker protects the circuit from sudden rises of the current strength to dangerous points, while the fuse protects from smaller increases that are of prolonged duration.

LIGHTNING ARRESTERS.—Lightning arresters are devices provided to protect the apparatus in a circuit from injury when the line is struck by lightning. If the current flowing in the circuit is weak, as for example that in a telegraph or telephone circuit, the lightning arrester can be a very simple affair; but if the line current is strong a more complicated device is required. Why this is so can be understood from the following explanation of certain properties of electric currents.

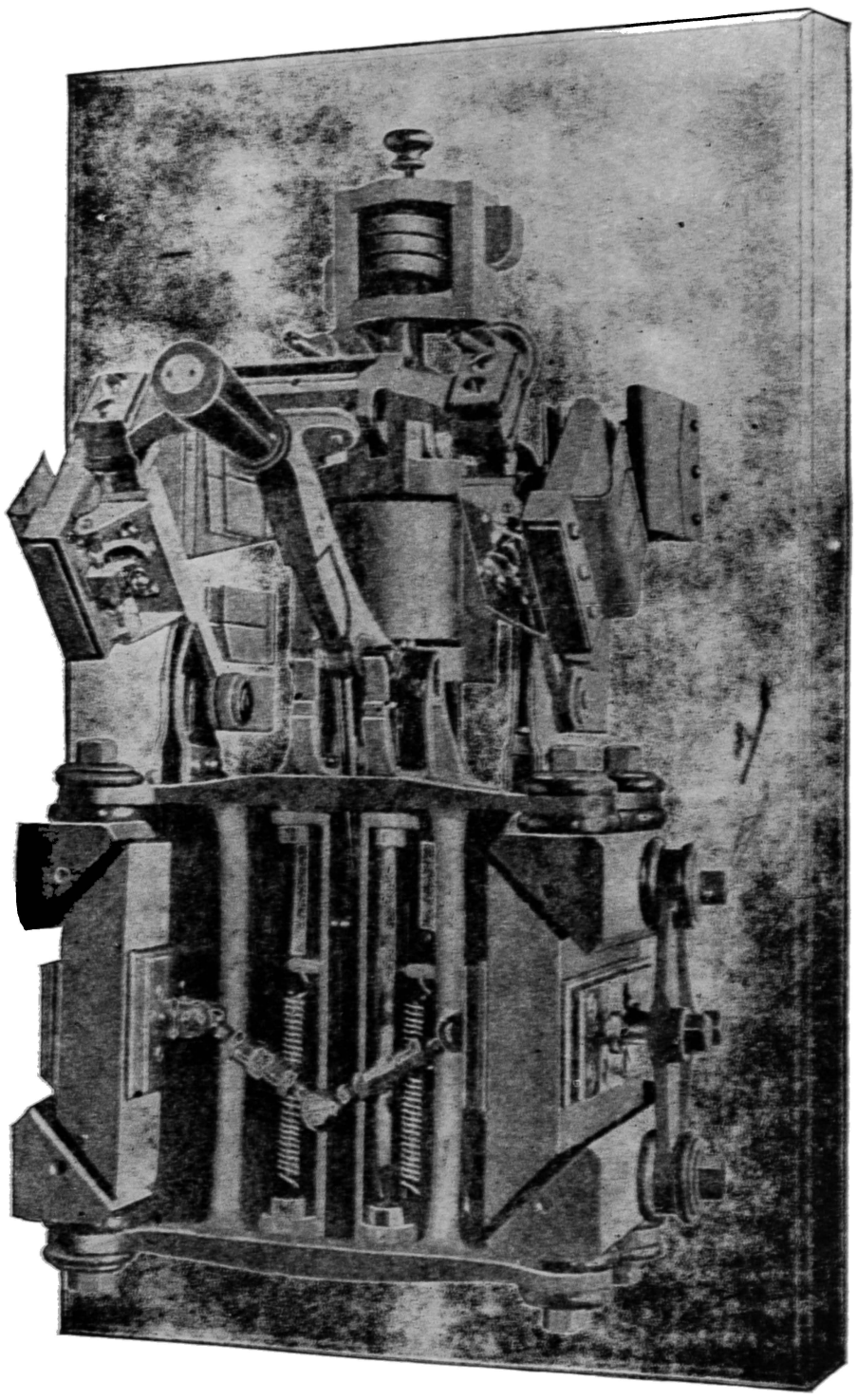

Fig. 3647.

If the strength of an electric current is not increased instantly its growth is not hindered by anything except the resistance of the circuit; but if the increase in current is very great and instantaneous, its passage through the circuit is resisted by what is called self-induction, and the effect is that the circuit acts as if it had been suddenly changed from a conductor to a non-conductor. If the circuit is a straight wire the opposition to the flow of current introduced by the self-induction is not so very great; but if the wire is in the form of a coil, then the current is resisted to such an extent that it will jump across the insulation in its effort to find a passage other than through the coil. When lightning strikes a circuit, the current strength is increased instantly to an

enormous strength, and the result is, that if there is no lightning arrester, the lightning discharge will break through the insulation as soon as it reaches the first coil of wire. Now, to protect the coil, all that is necessary is to provide, at a point near it which will be reached by the lightning flash before it reaches the coil, a path through which the current can break to the ground easier than through the insulation of the coil. To accomplish this it is sufficient to provide two points separated by about one-sixteenth of an inch, one being connected with the ground and the other with the line near the coil to be protected. With this device, if lightning strikes the line it will run along until it reaches the coil, and will then back up, as it were, and finding the two points the easiest way to the ground, will pass through them and not injure the apparatus. If the current in the line is small, as soon as the lightning discharge has passed, the flow of current through the arrester will stop. If the current in the line is strong, it will continue to flow to the ground through the lightning arrester, after the lightning discharge has passed. Before the lightning strikes the line the

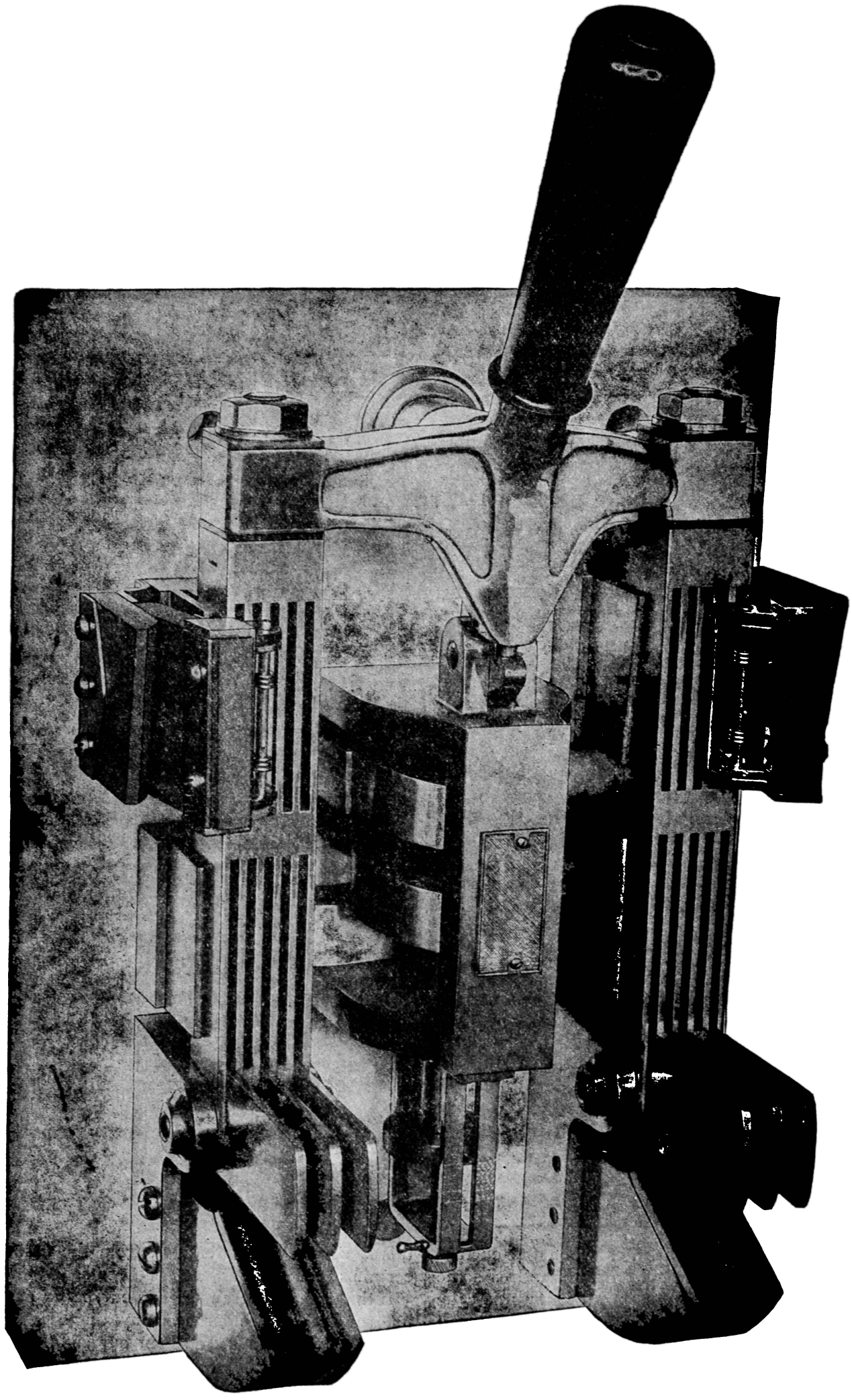

Fig. 3648.

current will not pass through the arrester to the ground, because it has not sufficient electromotive force to jump across the gap between the points; but the current having once been established

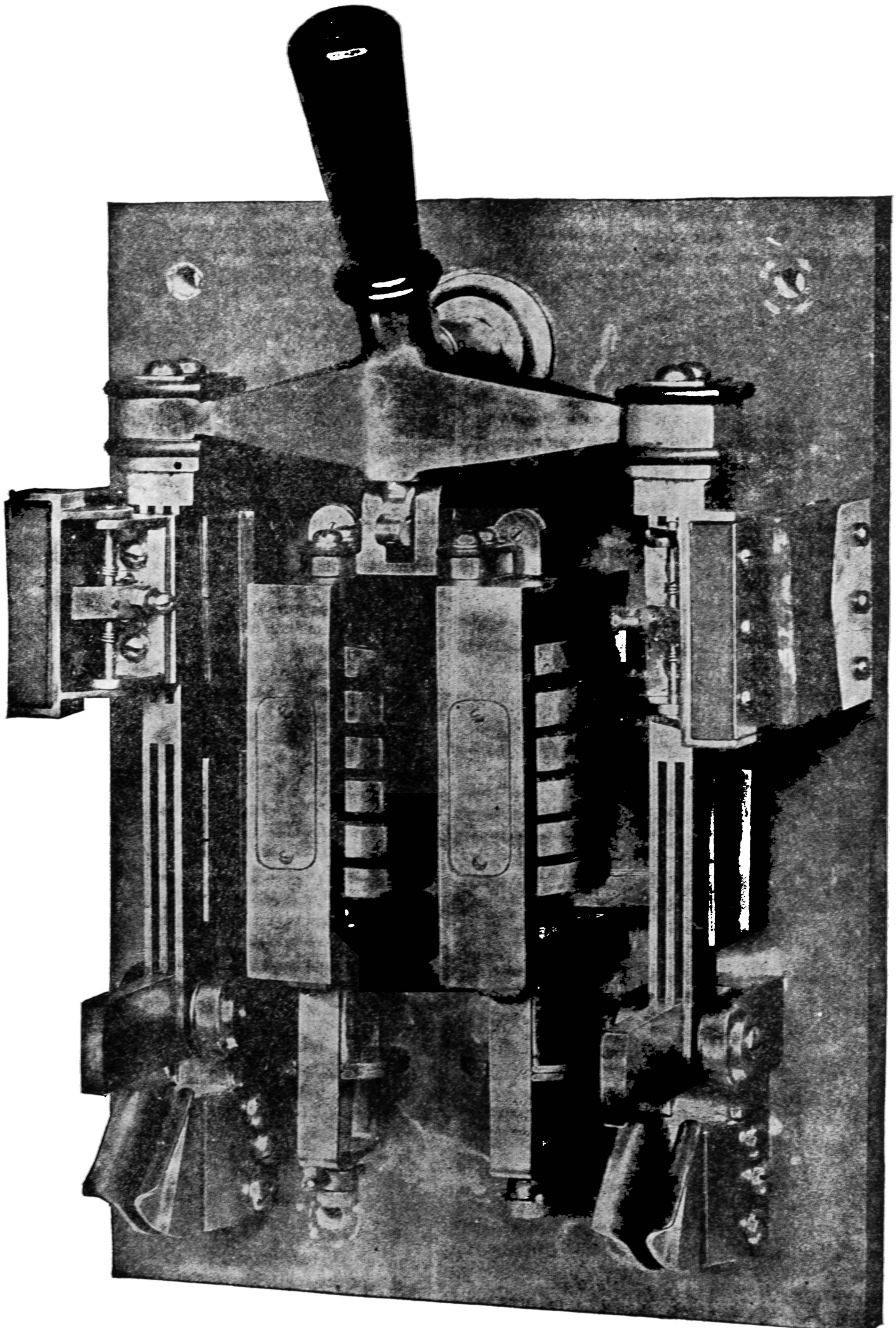

Fig. 3649.

by the assistance of the lightning discharge, the line current is able to keep up the flow. On this account a lightning arrester for a telephone circuit is a very simple apparatus, and consists simply of two pieces of metal with teeth on the edges, like a saw, these teeth being set so as to be about one-sixteenth of an inch apart. For the lines that convey the strong currents of electric generators it is necessary to provide arresters that are so made that if the current persists in flowing through the arrester after the lightning has passed, the resistance of this path may be so increased as to cause the current to break. The manner in which this is accomplished can be understood from the explanations of

the arresters shown in Figs. 3650 to 3660. The arresters shown in Figs. 3650 and 3651 are the same, with the exception that one is for indoor and the other for outdoor use. In Fig. 3650 the upper part of the apparatus is connected with the ground, and the lower with the line. At the line shown between the two lower supports of the vertical rod, the top part and the lower part come together to within a small fraction of an inch. The spool shown on the lower part is a solenoid through which the current that passes through the arrester flows. When light-

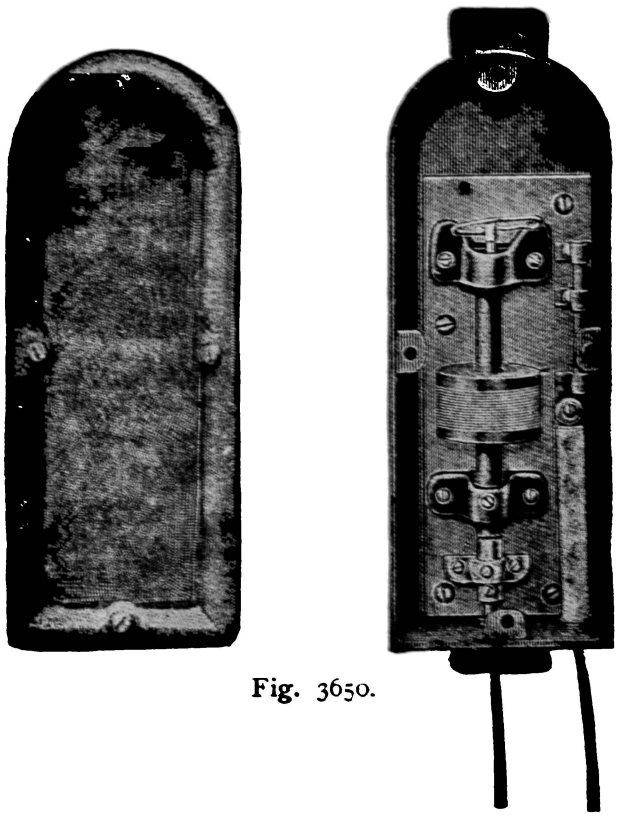

Fig. 3650.

ning strikes the line, it passes through the lower rod and over the air gap between it and the upper rod to this rod, and thus to the ground. But if the line current follows the lightning, it passes through the solenoid, and this, becoming magnetized, pulls down the lower rod and increases the distance between it and the upper rod, thus increasing the resistance of this path so much that the generator electromotive force is not able to keep up the flow of current, and the circuit breaks.

In the arrester shown in Fig. 3652 the action is slightly differ-

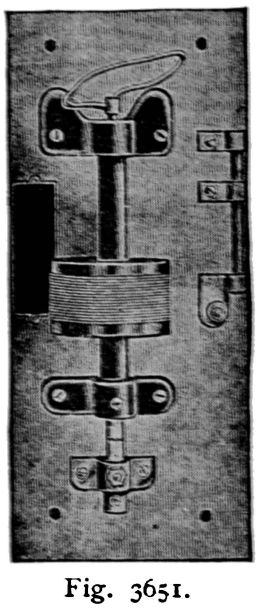

Fig. 3651.

ent. In this device the current of the discharge passes from the bottom of the chamber to the ball just above it, and then through the rod to which the ball is suspended, and through the side rod, and thus to the bracket marked "ground." This current in passing through the apparatus sets the ball in motion, as indicated by the dotted lines, and then, when the lightning current passes, the generator current breaks, as the distance between the ball and the point where the current enters the bottom is more than the generator electromotive force can overcome.

The arresters shown in Figs. 3653, 3654, and 3655 are of the type known as magnetic blow-out arresters. The two pieces shown in light shade in Figs. 3653 and 3654 are the plates to which the line and the ground wires are attached, and when the lightning strikes, it passes from the end of one to the end of the other. These ends, where the current jumps across, are at the lower inner corners, and in the cuts are not seen, as they are covered by the

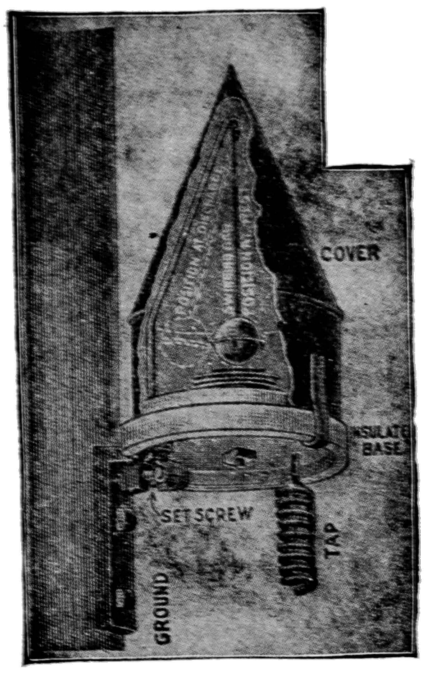

Fig. 3652.

upper part of the magnet. If the line current undertakes to follow the lightning discharge, it has to pass through the coil of wire on the magnet, and the lines of force developed thereby pass directly over the points of the two light-colored pieces which form the terminal of the ground and the line wires. The lines of force passing over this space force the spark that forms in the gap

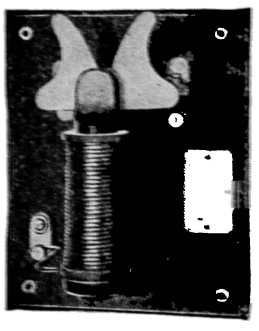

Fig. 3653.

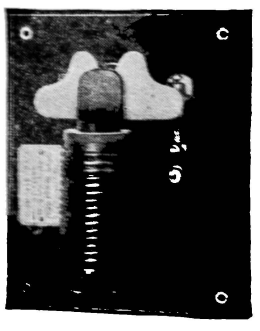

Fig. 3654.

between the points upward, and as the distance between the two plates increases the further up the spark is forced, the result is that soon it reaches a point where the voltage of the generator is no longer able to keep the current up, and then the spark goes out. These arresters are called magnetic blow outs because when they

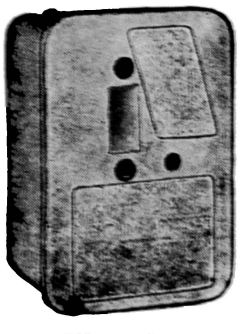

Fig. 3655.

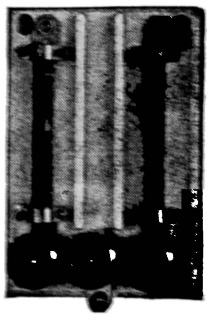

Fig. 3656.

act, the appearance is the same as if the spark had been blown out by a strong blast of air.

The arresters shown so far are of the type used with continuous currents. For alternating currents, arresters of the kind shown in Figs. 3656 to 3660 are used. In Fig. 3656 the line wires are attached to the part shown at the sides, and the ground wire to the centre. Thus one arrester protects both sides of the line and is therefore a double-pole arrester. The principle upon which this

arrester acts is that the metal of which the parts where the current jumps across are made, is of such a nature that it prevents the passage of a current unless the electromotive force is very

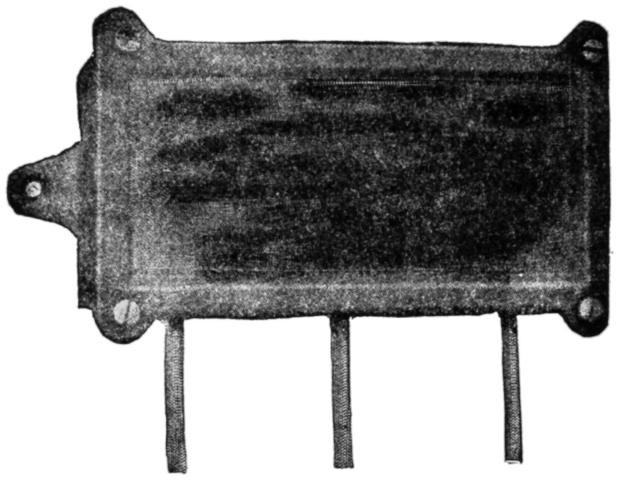

Fig. 3657.

great. As the electromotive force of a lightning flash is enormous, the device offers very little resistance to the passage of the lightning discharge ; but after this has passed, the generator cur-

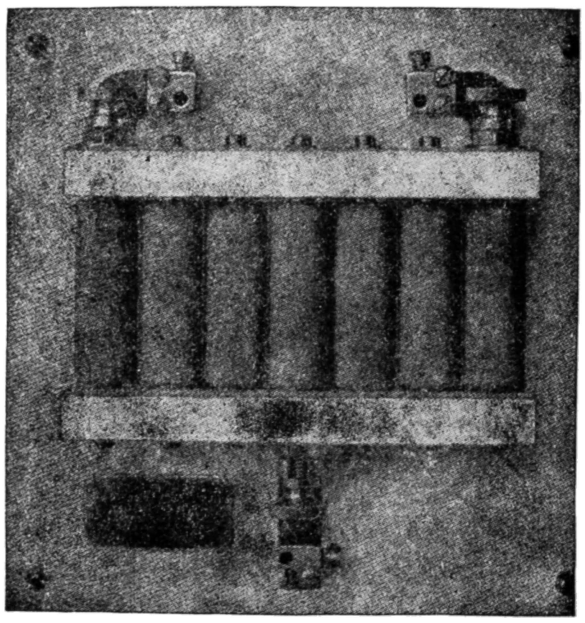

Fig. 3658.

rent does not follow, because the electromotive force is incapable of maintaining an arc, or spark, and without the spark there can be no current, for the resistance of the air is very great, and it is only on account of the reduction in this resistance by the

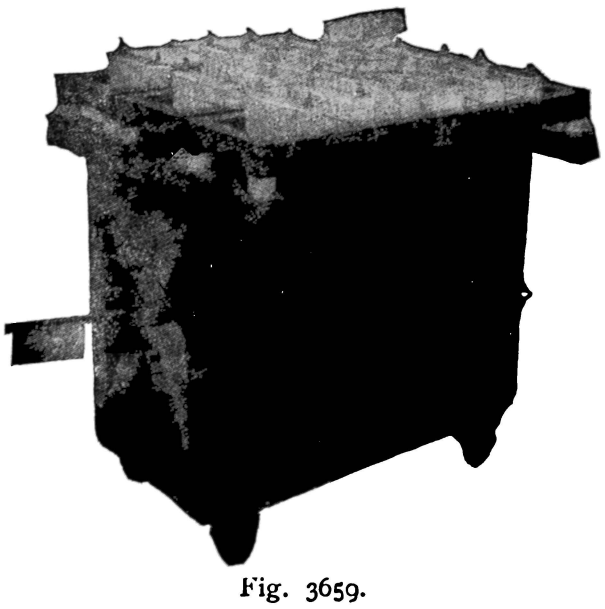

Fig. 3659.

presence of the spark that the generator current is able to jump over the gap.

Figs. 3657, 3658, and 3659 show different types of the same kind of arresters, the first figure showing the appearance of the apparatus when inclosed in a casing. Fig. 3660 is the same design as Fig. 3656, but is arranged to be located upon one side of the circuit only, and, therefore, is a single-pole arrester.

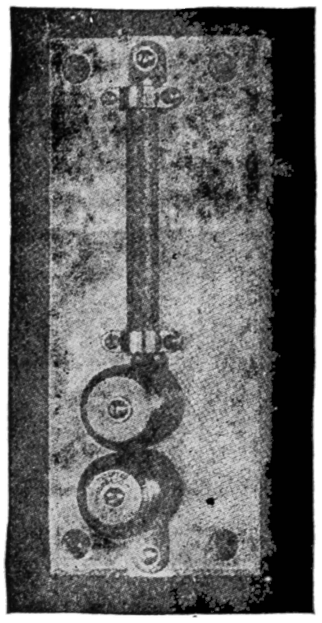

Fig. 3660.

MEASURING INSTRUMENTS.—Measuring instruments used with electrical machinery are of three kinds—those to indicate the electromotive force of the current, which are called volt meters ; those used to measure the strength of the current, which are called ammeters ; and those used to measure the power, or energy, and which are called watt meters. Electromotive force alone does not measure the power in an electric current, neither does the strength of the current alone ; the power is proportional to the electromotive force multiplied by the current strength. A current of 10 volts electromotive force and having a strength of 1,000 amperes has the same energy, or power, as a current of a strength of 10 amperes and an electromotive force of 1,000 volts. Both these currents would represent a power of 10,000 watts. A watt is such an amount of power that it requires 746 to equal one horse-power. As the watt is a small unit, it is only used to measure small currents ; the energy of large generators is measured in units of 1,000 watts, called kilowatts. One kilowatt is equal to 1,000 watts, and as one horse-power is equal to 746 watts, one kilowatt is equal to about one horse-power and a third. Ammeters and volt meters are constructed upon the same principles, and have the same external

Fig. 3661.

appearance ; but there is a slight difference in the internal construction. Both act by the attraction or repulsion of magnets and electric currents. One of the many types of instruments now upon the market is shown in Fig. 3661. This, as will be seen, is

a volt meter. It will be noticed that there are two indicator arms, one pointing to 110 and the other to 104. The first is provided simply as an additional convenience; but the second one is the sure indicator, that is, it indicates the actual voltage of the current. If the standard voltage that should be kept up is one hundred, the indicator with the ring at the end is set opposite this mark, and then the attendant can see from a considerable distance whether the pointer that indicates the voltage is below or beyond the mark. The stationary pointer or guide is not, as a rule, provided with ammeters, as it is not necessary to keep the amperes constant; in fact, they cannot be so, for the current strength will rise and fall in accordance with the demands of the circuit.

The manner in which these measuring instruments act can be understood from the following explanation of the construction and action of the Weston instruments.

If a coil of wire is suspended between the poles of a magnet,

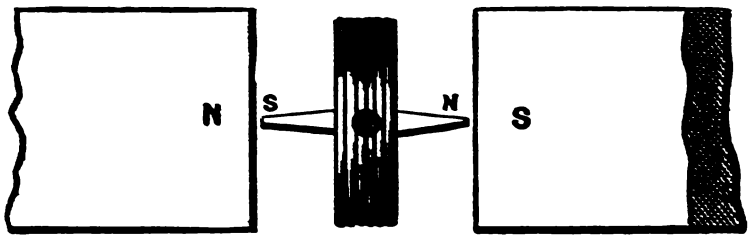

Fig. 3662.

and a current of electricity is passed through it, it will behave just as if it were rigidly connected to a magnet fixed in its centre, as is indicated in Fig. 3662; the bar N S indicating the supposed magnet in the centre of the coil. Now suppose the coil shown in this figure be suspended so as to allow it to swing freely upon its axis, this axis being perpendicular to the plane of the paper; then if a current is passed through the coil in the direction indicated by the straight arrow, it will be turned in the direction of the curved arrow, from the position shown in Fig. 3662 to that of Fig. 3663. The coil will be turned in this direction even with the weakest current; therefore, if this turning tendency is opposed by a spring, the amount of movement will be governed by the strength of the current. The spring can be so set that when there is no current flowing through the coil, it will assume a certain position, and this would correspond to the zero point on the scale of the instrument. By making the spring of a certain strength, it will require a certain amount of current flowing

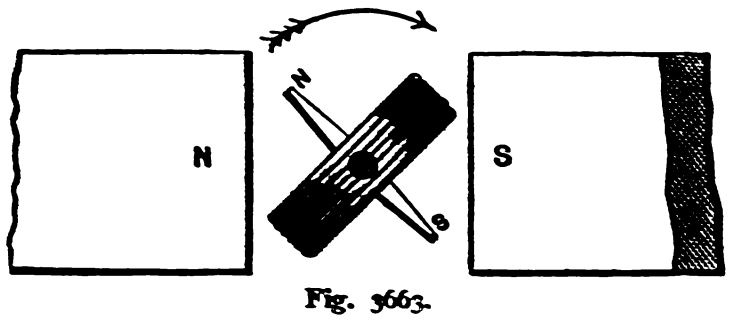

Fig. 3663.

through the coil to twist it through a certain angle. Any smaller current than this will deflect the coil through a smaller angle. The maximum deflection will be that which corresponds to the greatest current the instrument is intended to indicate. By attaching to the coil a pointer of suitable length, this can be made to swing over a scale; and if upon this scale are marked the points that correspond to the deflections obtained with certain current strengths, then the instrument can be used for the measurement of currents; and whenever the indicator points to a certain mark, we will know that the current passing through the coil is as much as is necessary to produce that deflection.

In the Weston instruments the magnet which pulls the coil around is made in the form shown in Fig. 3664 and is provided with pole pieces P P which are bored out to a circular form. The ends are connected by a brass plate M, being used so as to not divert the magnetism from the centre line of the poles. To this plate M is attached a cylinder C which is made of soft iron. This cylinder is slightly smaller than the bore of the poles, as can be seen from the figure, and thus a narrow circular space is left in which the wire coil can swing. The coil is shown in Fig. 3666, together with the springs which oppose its movement, and also the indicating arm. The manner in which the coil is pivoted is shown in Fig. 3665. As it is necessary that the coil swing as nearly frictionless as possible, and that it has no resistance other than that of the coiled springs located at top and bottom, the ends

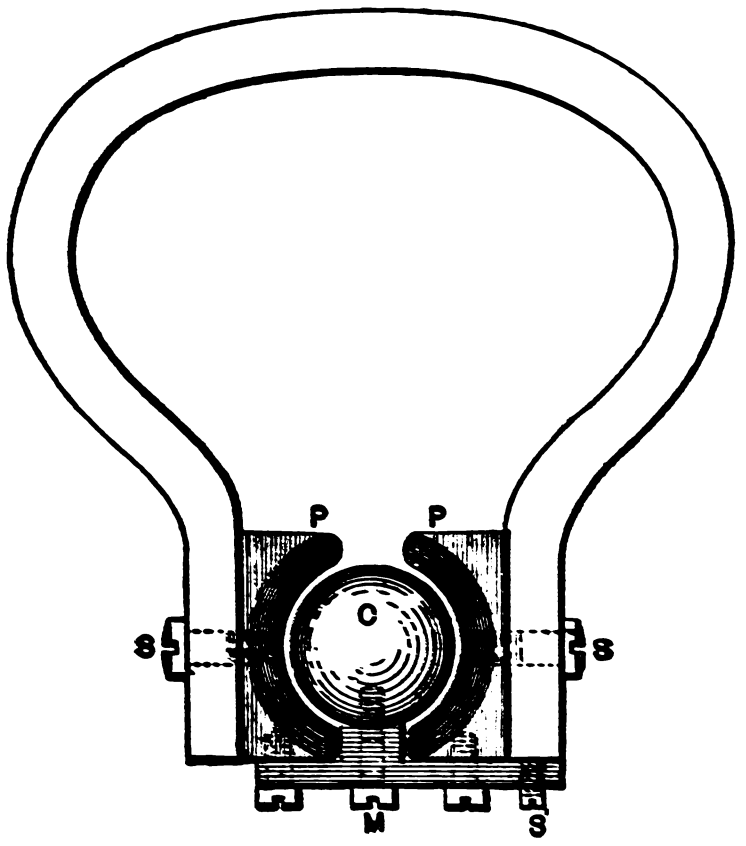

Fig. 3664.

of the wire coil are attached to the spiral springs, and only a small portion of the whole current is actually passed through it—as much as can flow through the two springs without heating them to a noticeable degree.

If the instrument is intended for an ammeter, the bulk of the current passes through a thick wire running from one of the binding posts to which the line wires are attached, to the other, and

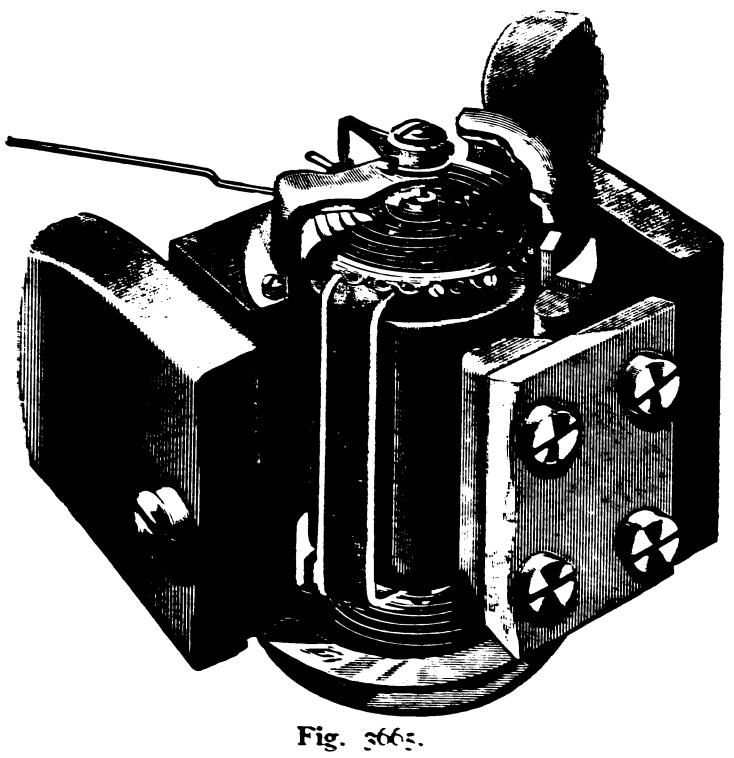

Fig. 3665.

by properly proportioning this wire as to diameter and length, the strength of the current that passed through the coils is adjusted. If the instrument is to be a volt meter, the whole current entering the instrument is passed through the coil, and, in addition, it is passed through a resistance, the two being in series. This resistance is made in the form of a flat coil and is located in the space inside of the upper part of the horseshoe magnet, as can be seen from the dotted lines in Fig. 3667. The pivots upon which the

coil swings are made of steel very accurately finished, and these run in jewelled bearings, thus reducing the friction to practically zero.

As an ammeter is intended to measure the strength of the whole current, it is connected in the circuit in series; that is, one side of the line is opened and the instrument is placed in the gap, the wire coming from the generator being connected with one of the binding posts, and the wire leading to the external circuit being connected to the other post. Thus the current coming from the generator passes through the ammeter before it goes to the external circuit.

If the instrument is a volt meter, it is connected across the terminals of the generator; that is, one of the wires from the generator connects with one of the instrument binding posts, and the other wire from the generator with the other instrument binding post. In this way the current that passes through the instrument does not go out to the line, but returns direct to the generator. Now, with this connection it can be seen, at once, that the full pressure, or electromotive force, of the generator acts to drive a current through the instrument, and, therefore, the higher the voltage the greater the current and the further around the indicator will swing. As the volt meters are placed directly across the machine terminals, it can be understood at once that the resistance of the coil must be very high; if not, the current passing through it would be very great. To make the resistance as high as possible, the coil is made of the finest wire obtainable, and so is the extra resistance coil, except in the case of instruments intended for measuring very low voltage.

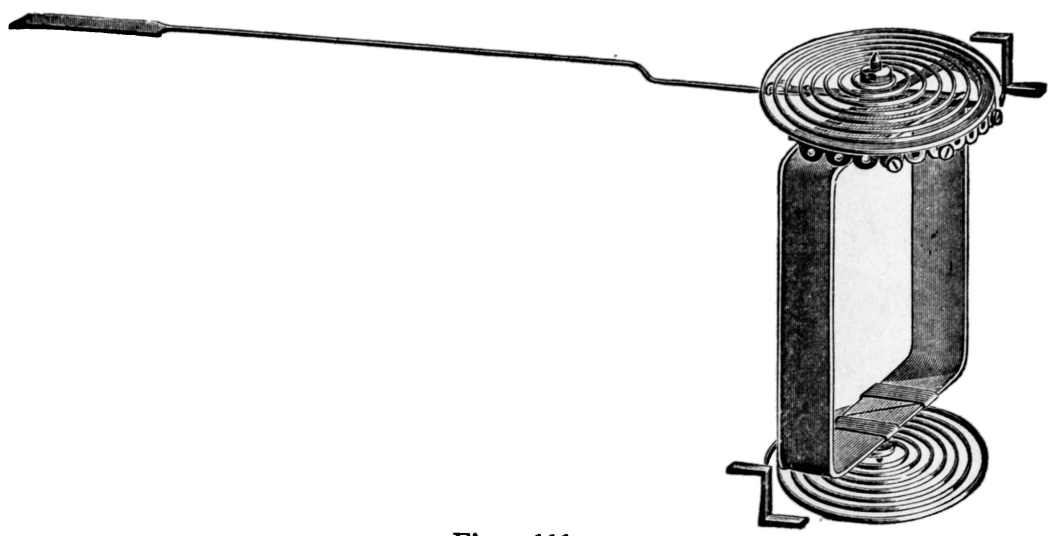

Fig. 3666.

Measuring instruments are made in a great variety of forms and sizes; some are simple and inexpensive, and others are just the reverse. The instruments shown in Figs. 3668 to 3671 are of the type generally used in large stations and are of what is known as the switchboard type with illuminated dials.

Fig. 3668 is an ammeter, seen from the front, and Fig. 3669 is a rear view of the same instrument, from which the manner in which the dial is illuminated can be understood. The casing back of the dial is removed, and reflectors are provided to throw the light of an incandescent lamp upon it. The advantage of this illuminated dial is that the scale can be seen at a greater distance, and especially at night.

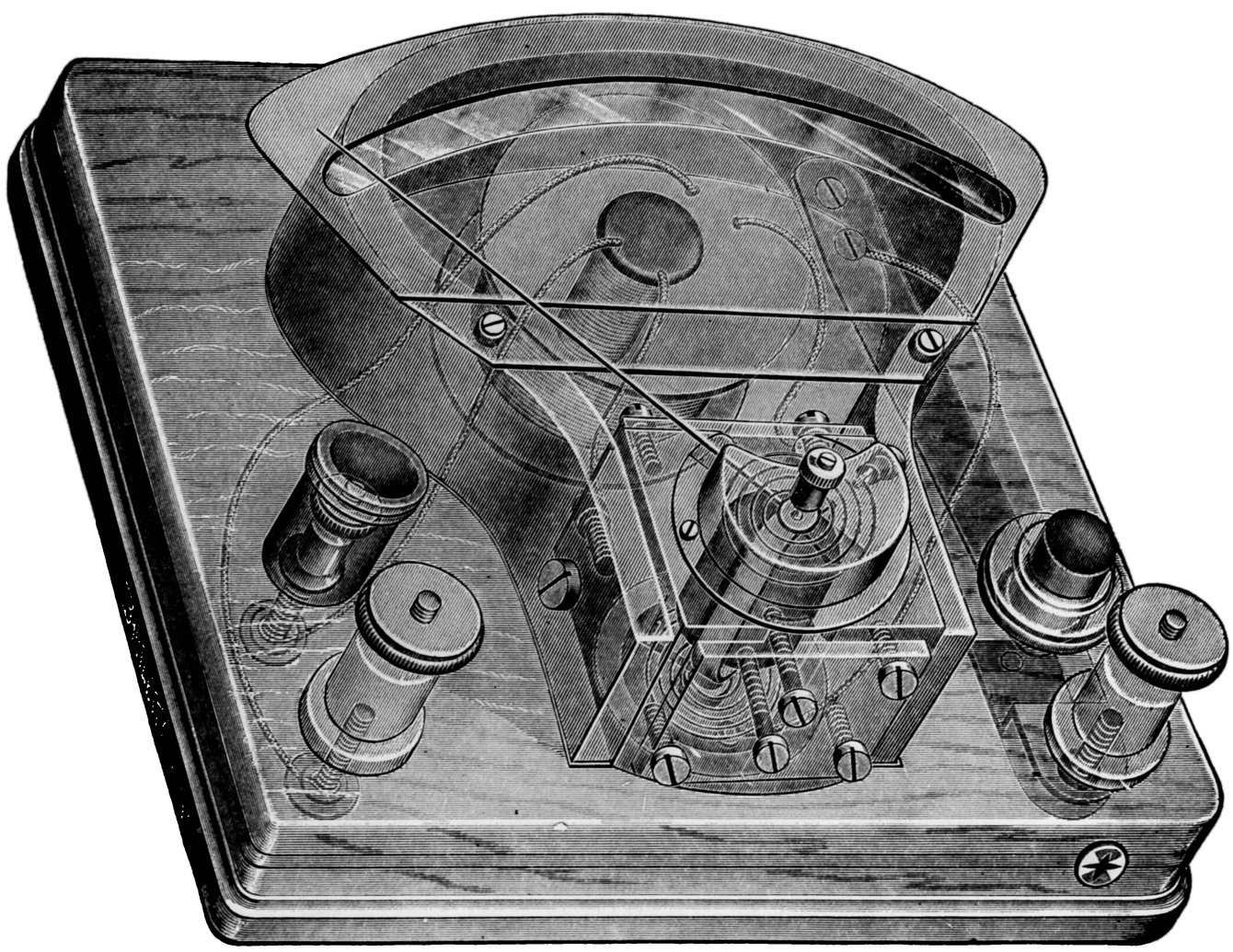

Fig. 3667.

Fig. 3670 represents a volt meter, and, as will be noticed, it differs from the ammeter only in having the extra pointer; and this,

as has already been shown, is simply an additional convenience. This second pointer is not acted upon by the current in any way, and is simply intended to be set by hand at the voltage at which the current is to be kept, and being more conspicuous than the figures on the dial, it can be more easily seen at a distance.

Fig. 3671 is what is called a potential indicator, and it differs from a volt meter only in that it is constructed so that it indicates pressures slightly above or below the standard point. In a volt meter the indicator begins to move as soon as any current passes through it, and thus indicates voltages all the way from zero up to the highest for which the instrument is intended. A potential indicator, however, will not move until the voltage reaches a point not far below the standard, and, as a result, the movement of the pointer is much greater for a given change in voltage. The instrument shown is for a voltage of 110, and, as will be noticed, this pressure is reached when the pointer is in the vertical position. When it is pointing to the left of the vertical, the voltage is too low; and when it points to the right, the voltage is too high. On this account it is easier to detect differences in the pressure from the standard than with a regular volt meter, and also smaller differences, as for each volt the deflection of the pointer is greater.

Volt meters are also constructed for the purpose of detecting whether the circuit is well insulated from the ground, and when made for this purpose they are called ground detectors, the name being given because when a circuit is not perfectly insulated from the ground it is said to be grounded. If the insulation between the circuit and the ground is only slightly impaired, so that there is but a small leak of current, the circuit is said to be imperfectly grounded; but when nearly all the current passes to the ground when a connection from some point is made with an object that is not insulated, then the circuit is said to be dead grounded. By means of a ground detector of the volt-meter type—that is, an instrument that will indicate the voltage through the ground leak—the character of the defect in the insulation can be determined; for if there is a dead ground, the indicator will indicate nearly the

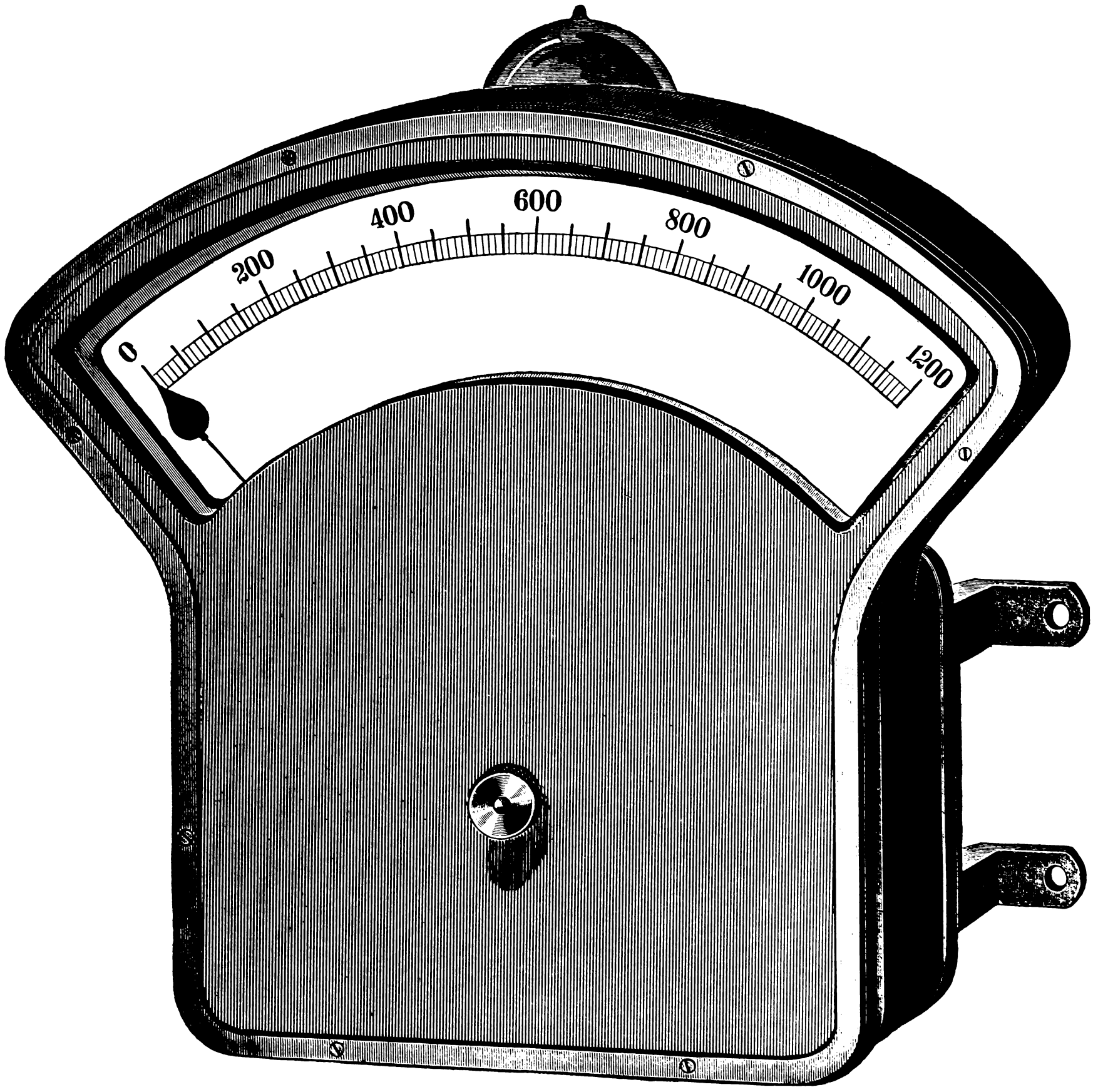

Fig. 3668.

full voltage of the current, while if there is only a slight ground, the voltage will be low.

A ground detector is shown in Fig. 3672, and this cut also illustrates the form of ammeters and volt meters of the Weston make of the portable kind. These instruments are much smaller than the station variety, but are not restricted to the measurement of small currents on that account. The size does not make any difference in the capacity of the instrument, the smallest measuring as high voltages or amperages as the largest.

power must be so constructed that they will be controlled by both the electromotive force and the current strength. Such instruments are called watt meters, and are classified as watt hour meters if they register the number of watts per hour, or as ampere hour meters if they register the ampere hours. The latter type of instrument is not, strictly speaking, a watt meter, as it registers current strength only; but, as they are used on circuits in which the voltage is constant, the watts can be obtained by multiplying the ampere hours by the volts.

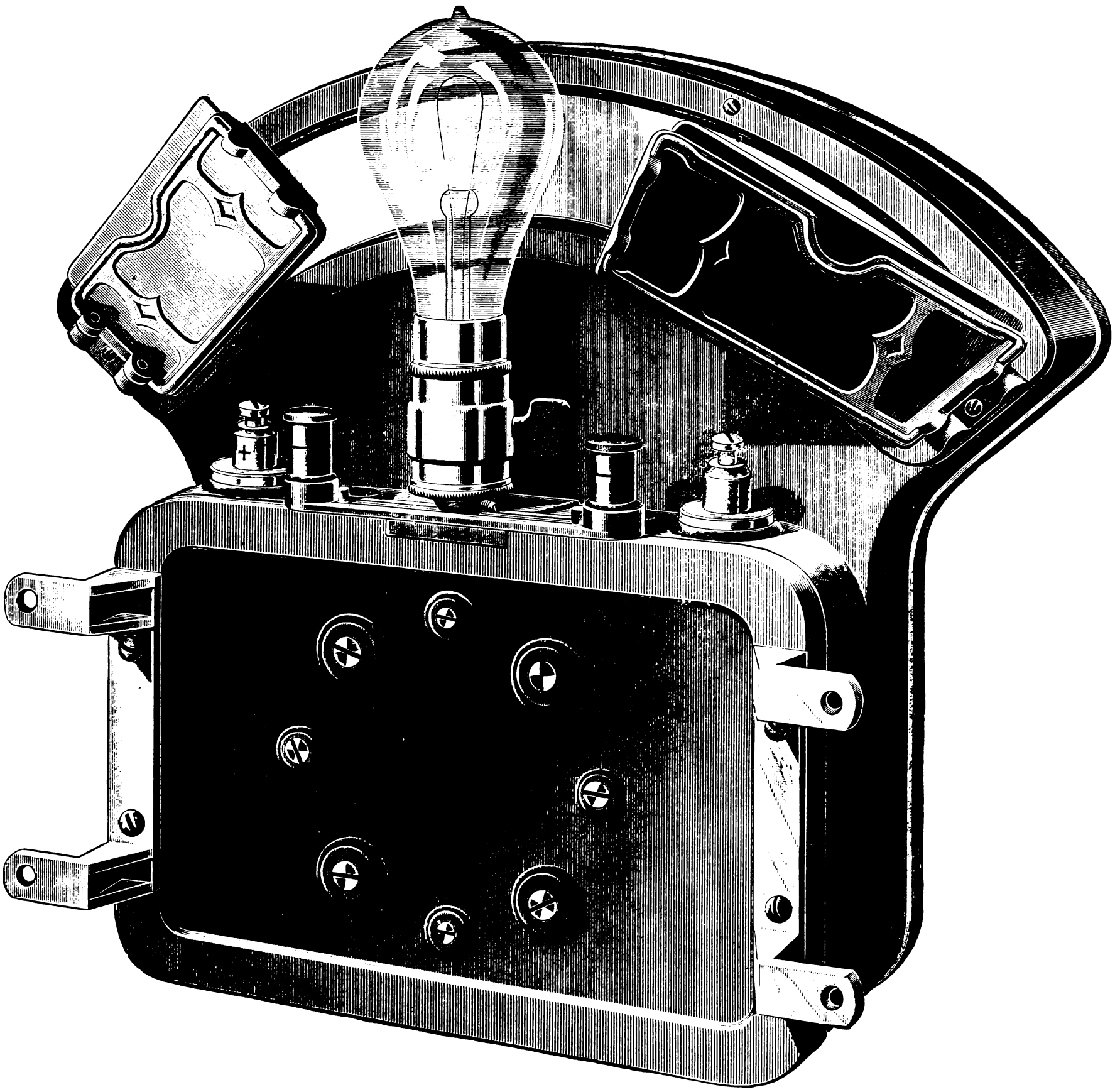

Fig. 3669.

Fig. 3673 shows the type of instruments manufactured by the Queen Company, and Fig. 3674 illustrates the portable type of instruments made by the Whitney Company. All these instruments are expensive, ranging in price from $25 up to several hundred dollars; but in Fig. 3675 is shown a simple instrument that is sold for $1.50. It is only made, however, to measure voltages of 10 volts or less, or 10 amperes or less.

As already stated, the power of a current is not measured by the volts or the amperes, but by the product of one by the other; therefore, instruments intended for the purpose of measuring the

Figs. 3676 and 3677 show an ampere hour meter, and Figs. 3678 and 3679 show a watt hour meter. In both these instruments it will be noticed that dials are provided just as in a gas meter, and they are for electricity what the gas meter is for gas; that is, they register the amount of electrical energy used by the consumer. The principal of operation of these instruments is very simple; they are nothing more or less than electric motors, so constructed that their velocity is directly proportional to the energy in the current that passes through them; therefore, if the energy is small, they revolve slowly, and the recording hands upon

the dial likewise move slowly; but if the power being absorbed is great, they revolve fast and then the hands register faster.

Several other types of measuring instruments are made. Thus there is the regular watt meter, which indicates the actual amount of power in the current at any time; if the generator is delivering 100 kilowatts, the instrument will indicate that amount, and if the power is 95 kilowatts, the instrument will indicate this much.

There are also recording ammeters and volt meters which are, substantially, the counterpart of the recording steam gauges used in connection with boilers; they register upon a roll or a cardboard dial the volts or amperes during a whole day or week, according to the manner in which they are constructed. Generally these recording instruments are provided with cardboard dials, and a fresh one is put into the instrument every morning.

SWITCHBOARDS.—A switchboard is a device to facilitate the handling of the current generated by one or a number of generators; it is not an actual necessity, but a great convenience. The switchboard is placed in the circuit, intermediate between the generators and the external circuits. The wires from the generators are connected with it, and so are those leading to the external circuits. The switches by means of which the current is diverted from one path to another, or is shut off entirely, are placed upon this switchboard. In addition it is provided with the measuring instruments, the circuit breakers, and the field regulators of the generators.

The general appearance of the front of a simple switchboard can be obtained from Fig. 3680. Such a board can be connected with the generators and the external circuits in several ways, the switches and other devices being located in each case so as to be able to properly perform their functions. With the illustration as shown, the two panels to the left could be connected with two generators, and the one to the right with two feeding lines. The devices seen at the top of the panel are the circuit breakers, and those directly under them are ammeters and volt meters. The wheels under the instruments in the two panels to the left are the

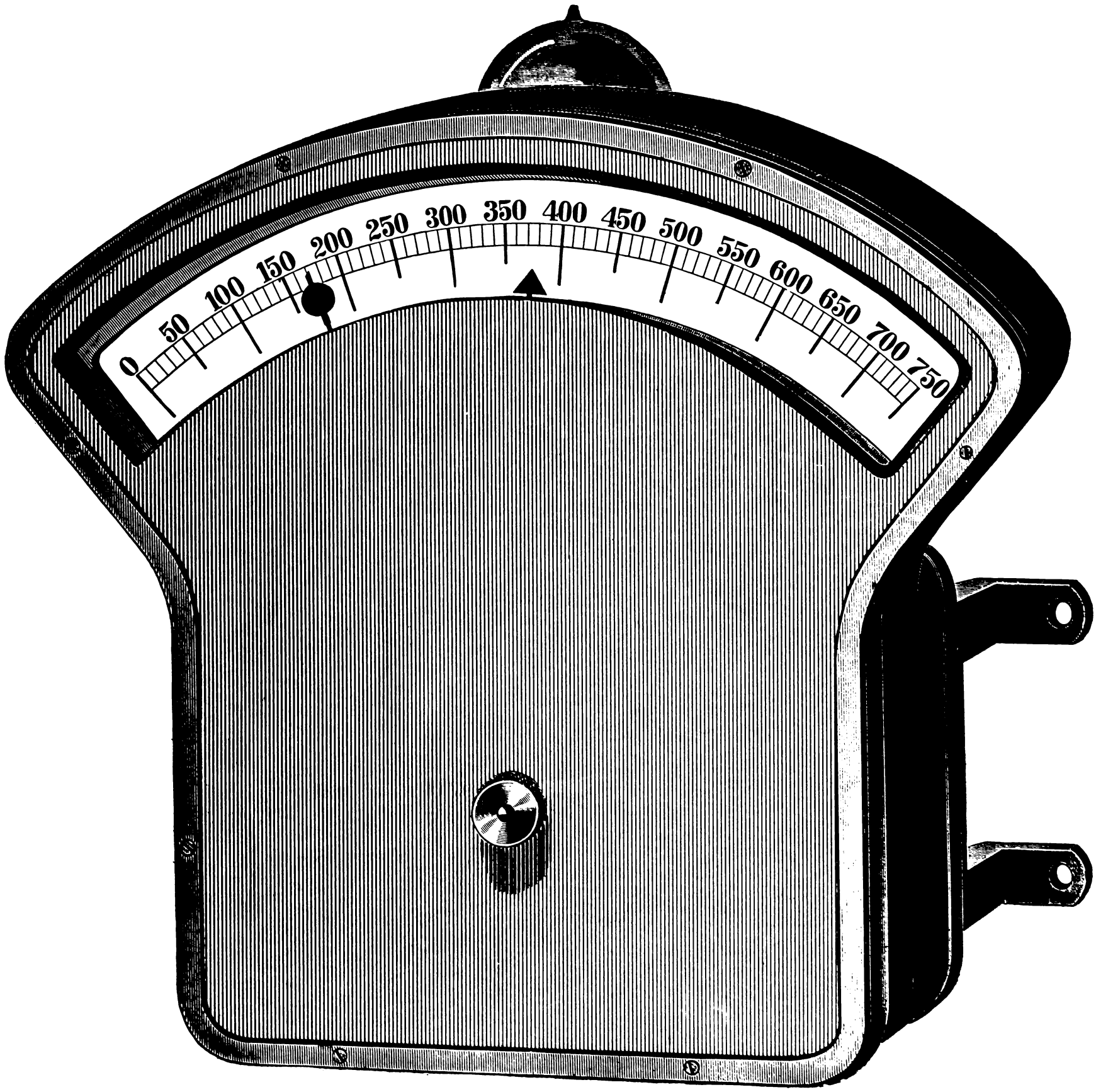

Fig. 3670.

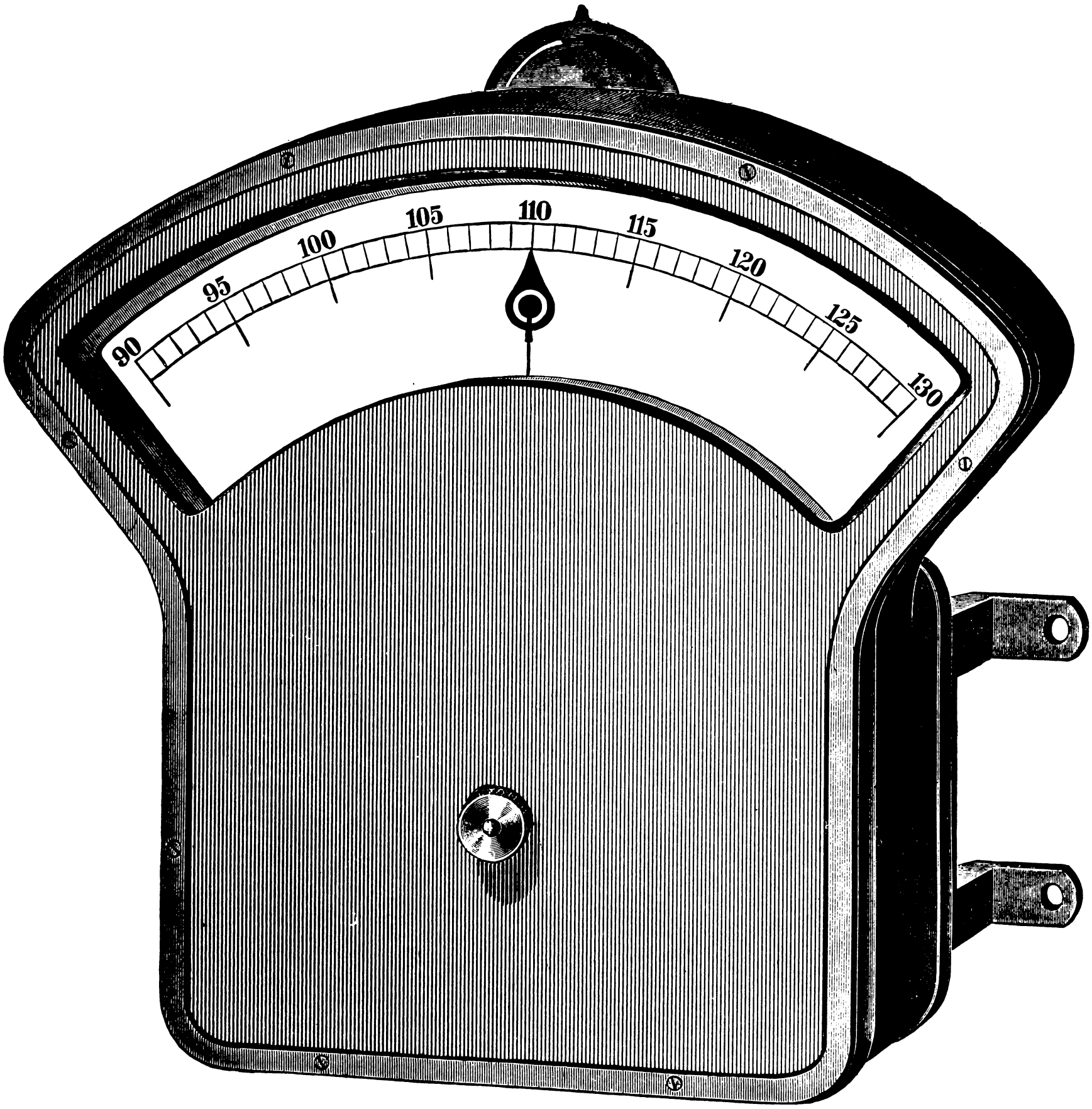

Fig. 3671.

Fig. 3673.

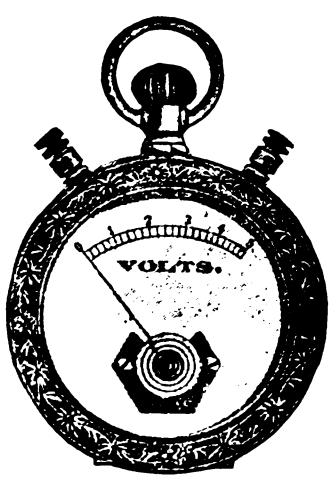

Fig. 3674.

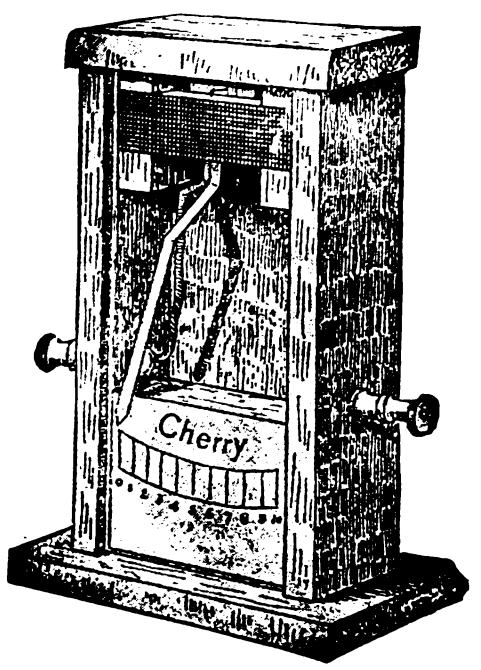

Fig. 3675.

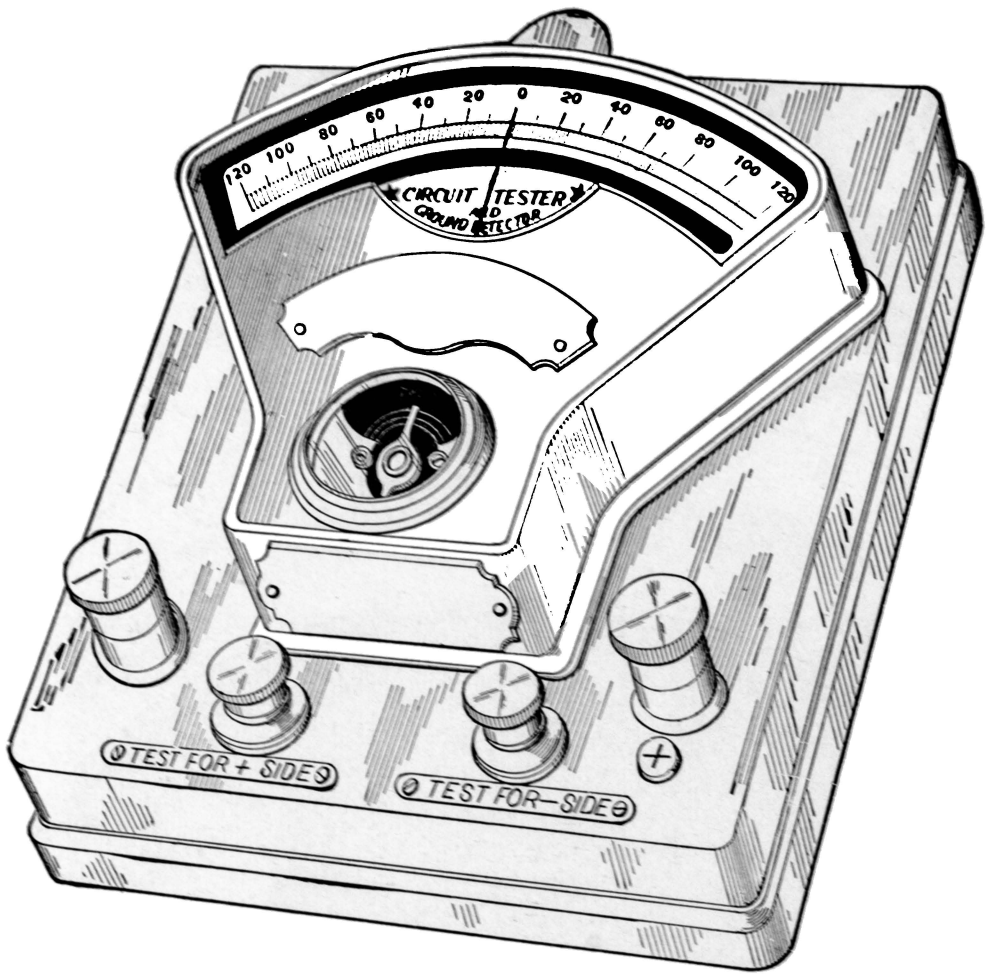

Fig. 3672.

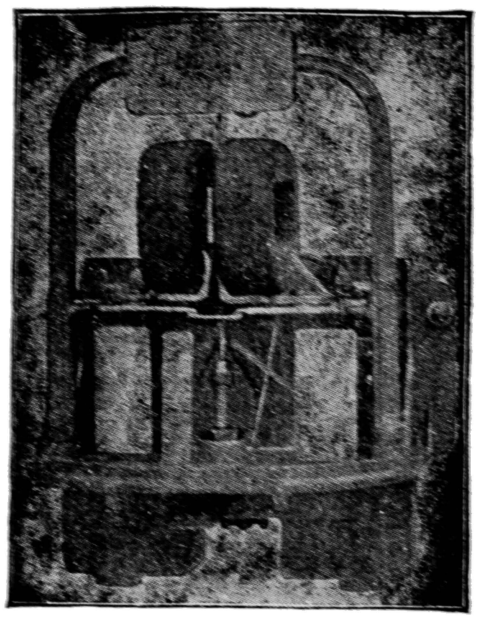

Fig. 3676.

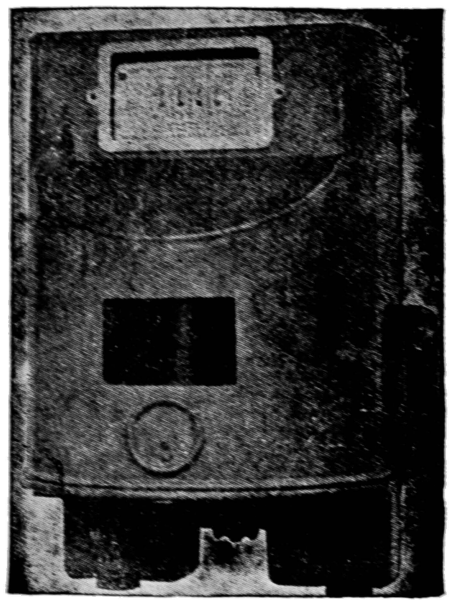

Fig. 3677.

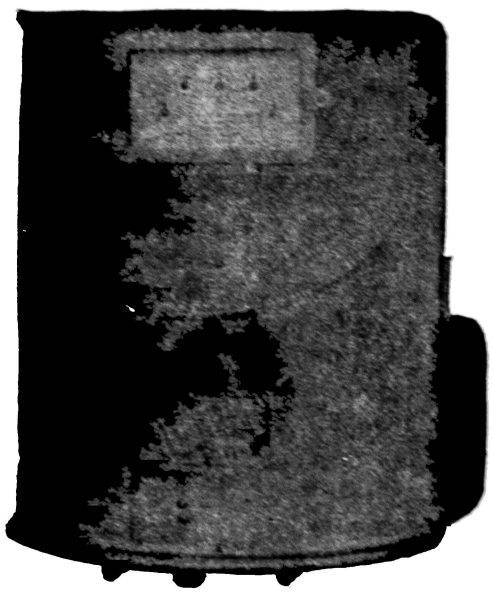

Fig. 3678.

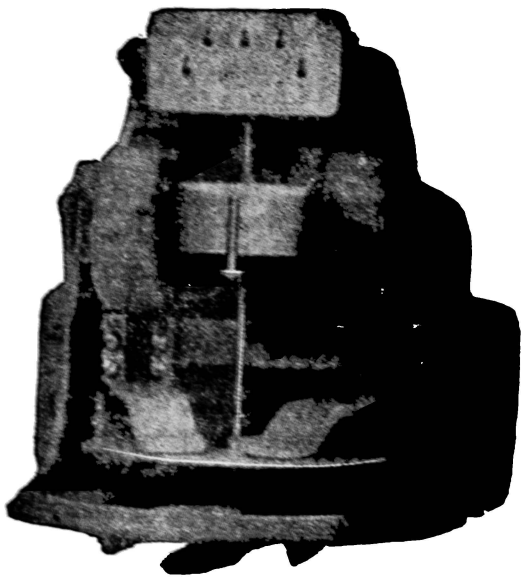

Fig. 3679.

handles of the field regulators, and the switches under these are for connecting or disconnecting the generators from the line.

In a switchboard as shown in this illustration, the two instruments upon the panels to the left would be ammetres, one being placed in the circuit of each generator, so as to measure the strength of the current of each machine separately. The two instruments upon the right-hand panel would be, one an ammeter, and the other a volt meter. The ammeter would measure the total current strength flowing out to all the external circuits, and the volt meter, the electromotive force. This volt meter would be so arranged that it could be connected with the main line or with either generator, independent of the other. When two or more generators feed into the same circuit, it is necessary that the electromotive forces of the two be equal, for if not one will be delivering more current than the other. By being able to switch the volt meter from one generator to the other, it is possible to determine at any time the relative voltage of the two machines.

From Fig. 3681 the appearance of the back of the switchboard shown in Fig. 3680 can be seen. The manner in which the generator and the external circuit wires are connected with the various parts of the board is not clearly shown in this cut, but the position of the field regulators can be found at once, they being the two square boxes located at the centre of the two right-hand panels. The four smaller boxes at the bottom of the board are lightning arresters. We will not undertake to explain the connections of this board any more in detail, as we can furnish a diagram of another board in which the position of the wires and the several connections are very clearly presented. This board is shown in Figs. 3684 and 3685, the latter being a diagrammatic representation of the circuit connections. Before giving the explanation of this board we will present two other examples, so that a fair idea may be obtained of the great modification that can be made in the appearance of a switchboard as well as in the location of the various parts, and also in the design of these.

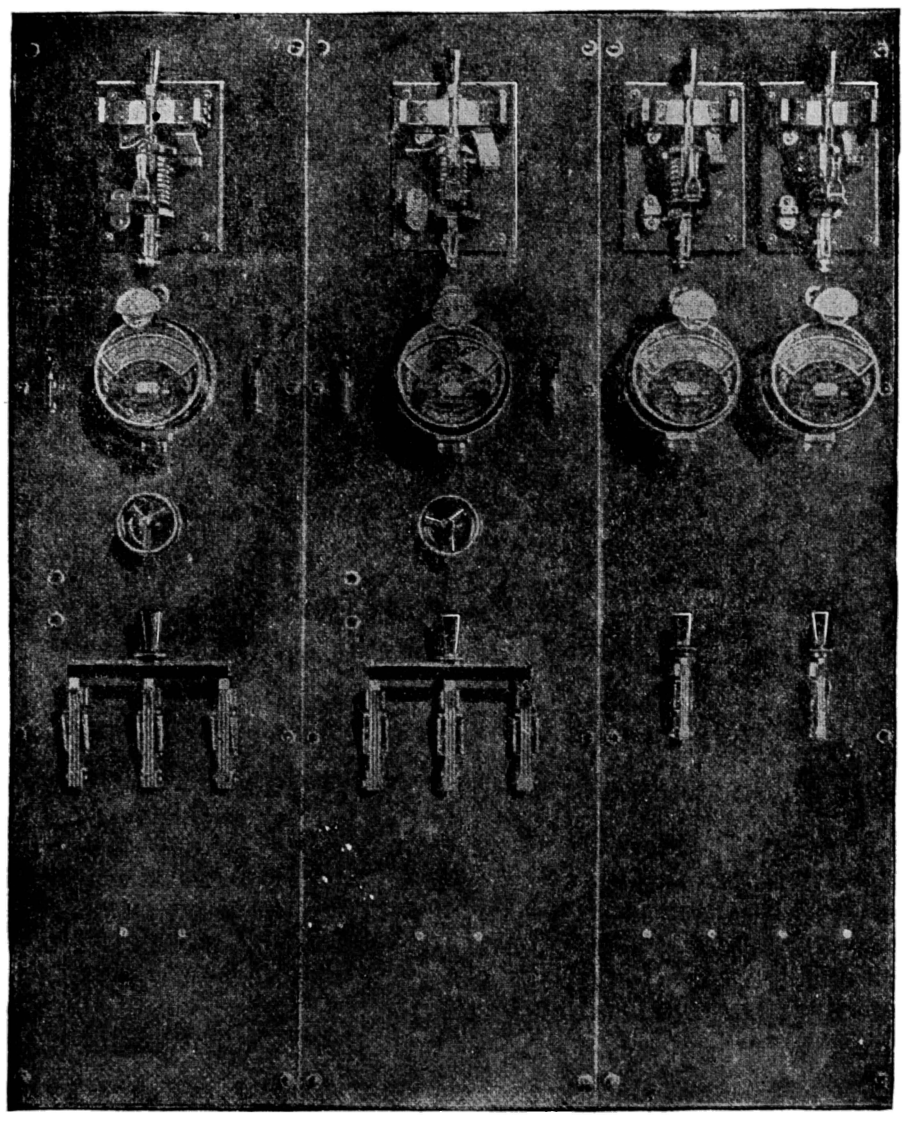

Fig. 3680.

If one is found to be lower than the other, the handle of the field regulator that belongs to that machine is turned in the proper direction until the voltage is brought to the proper point. From this simple case it will be seen that the office of the switchboard is to facilitate the handling of the apparatus, for if the field regulator were not located upon the board, it would still be perfectly possible to adjust the voltage of the generator by it, but not with so much ease; for the attendant would have to go to the regulator, turn it a trifle, and then go to the volt meter to see what effect the movement had had upon the current pressure. Having the two devices on the switchboard, one under the other, the operation is not only greatly facilitated, but the time required to adjust the voltage is considerably reduced, for the attendant can look at the volt meter as he turns the regulator handle and notice the effect, and therefore stop the instant he sees that the voltage is at the proper point. In the same way, if it is desired to cut a generator out of the circuit, it can be done from the switchboard, thus rendering it unnecessary to go to some other part of the building to accomplish the object.

Fig. 3682 shows a switchboard designed for three generators. The large switches are for the purpose of cutting the generators out of the circuit, and the smaller ones for cutting out, or in, the several external circuits. The centre measuring instrument is an ammeter and measures the total current in the system. Of the other four instruments, two are volt meters and two are ammeters. By placing these ammeters in the individual circuits of two of the generators, the current in the three can be determined at all times; for each instrument will show the current generated by the machine it measures, and the current of the third generator will evidently be the difference between the sum of the currents shown in these two instruments and the centre ammeter, which measures the total current. Having two volt meters, one can be used to indicate the voltage of the line and the other one can be switched into any one of the generator circuits so as to test the voltage of each machine separately. The handles for moving the field regulators are located at the bottom of the board.

In this switchboard no circuit breakers are shown, but it must not be inferred from this that none are used. In some cases the

circuit breakers are placed back of the board, because when they act a very large "arc" or flash is produced, and this often covers the surrounding parts of the board with vaporized and melted metal and thus in a short time gives it a dingy appearance. When the circuit breakers are located back of the board, a position is chosen that is accessible, so that they may be easily reset whenever they are opened by the action of the current.

Switchboards are sometimes very ornamental, as in the case of Fig. 3682, and sometimes very plain. The board proper is made of slate in the rough state when no ornamentation is attempted, and of polished slate or marble when it is desired to produce an artistic effect. With the latter type of boards, the instruments and the switches and other devices are highly polished, and often silver or gold plated. Generally the measuring instruments are of the illuminated dial type, except when the plant is very small. A sufficient number of lights are provided to give good illumination of every part of the board, but these are not always placed upon the board itself; in some cases they are suspended from the ceiling of the room.

One of the largest and most elaborate switchboards is that of the Duane Street Station of the Edison Illuminating Company of New York City. This is shown in Fig. 3683, the section to the left being the part that controls the circuits of the generators, and the section at the right being the portion that controls the distributing feeder circuits. The ammeters and volt meters used on this board are of a special design, and, instead of being placed flat against the surface of the board, are arranged edgewise, the dials being on the edges, and having a curved surface. This construction is clearly shown in the figure, the instruments being seen at the top in both sections of the board. The field regulators are located under the instruments in the left-hand section and are also made with the handles swinging over a curved surface. This construction of the instruments, as well as the regulators, was necessary on account of being compelled to get a large number into a very narrow space. As can be seen from the illustration, if the instruments were of the usual design it would not have been possible to accommodate them all unless they had been made so small as to be of little service, on account of the pointer and the scale being so small as not to be visible at any distance. The instruments in the generator section to the left indicate the current in each one of the generator circuits, while the instruments in the feed section indicate the current in the individual feeder circuits. The switches by means of which the currents are cut off from the several feeder circuits, as well as those controlling the generator circuits, are located at the bottom of the board, and it will be noticed that they are all of large size; but this will not be surprising when it is considered that they control collectively about 35,000 horse-power.

From Figs. 3684 and 3685 the manner in which switchboards are connected with the generators and with the external circuits can be understood, and, in addition, the general aim of the designer of such apparatus can be realized. The first figure shows the appearance of the front of the board, and the second the manner in which the instruments, switches, etc., are connected with each other and with the generators and the line wires. This switchboard is arranged to control three generators, as can be seen from Fig. 3685, the generators being shown at the bottom of the diagram and being marked dynamos. These machines are of the compound type, which, as has been explained, are provided with series and shunt coils upon the field. The field regulators are marked rheostat, and the manner in which they are connected in the circuit of the shunt-field coils can be clearly seen. The circles in the dynamo diagrams represent the armatures, and the zigzag lines above them are the series coils, the zigzag lines below being the shunt coils. As will be noticed, the ends of the series coils next to the armature are connected with one side of a double-pole switch, and through this with a line marked equalizer bus. The other ends of the series coils connect with the same switches, and through them with the line marked dynamo bus, just below the equalizer bus. The right-hand terminal of the left-hand dynamo and the left-hand terminals of the other two machines run to the lower corners of small panels marked "circuit breakers." The upper ends of these circuit breakers connect with a line directly below the lower dynamo bus, and from the centre of

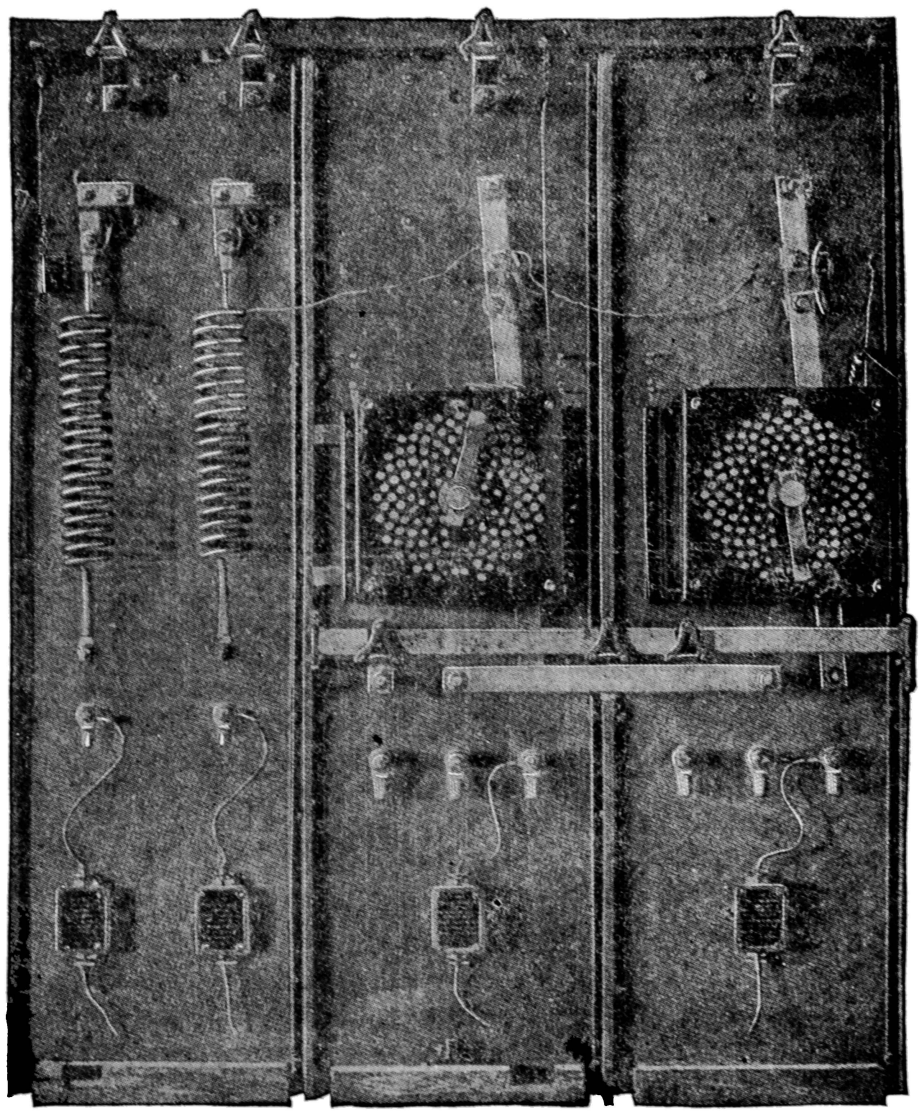

Fig. 3681.

this line a diagonal line runs up to one side of the recording ammetre, and after forming a loop under this instrument passes to the upper dynamo bus.

From this upper dynamo bus, connections lead to the several switches, the position of which will be made clearer by examining Fig. 3685. There are ten of these switches, arranged in four vertical rows ; two switches in each outside row and three in the centre rows. These switches, it will be found by tracing the lines running from their left-hand sides, are connected with the lines above the upper dynamo bus which are marked street-service bus. The three street busses connect with the three switch contacts, but the wires leading from the upper dynamo bus connect with the top and bottom contacts of each switch, while the centre contact is connected with the lower dynamo bus. These switches are of the three-pole, double-throw type, and the centre parts, to which the switch levers are hinged, are connected with the external circuit feeders.

To understand the operation of this switchboard properly, it is necessary to say that it is located in one of the large office buildings in New York City, and that it is arranged so that if it should become desirable at any time to operate the system from the street mains it can be done by simply turning the switches upon the switchboard. With this explanation, it can be seen at once that if the switches are turned or thrown to the right side, they will connect the distributing feeders with the dynamo busses, and therefore with the generators, and the current from these will feed the building. If, however, it is desired to take current from the street mains, then the switches are thrown to the left, and thus the distributing feeders are connected with the street busses, and through them with the street mains. The street mains are arranged upon what is called the three-wire system, and on that account the switches are of the three-pole type, and the whole building is wired according to the three-wire system. When the generator current feeds the building, the current from one of the dynamo busses passes into two of the feeder wires, taking those on the outside, while the centre wire carries the current from the other bus. On this account the centre wire is made of double the size of the outside ones.

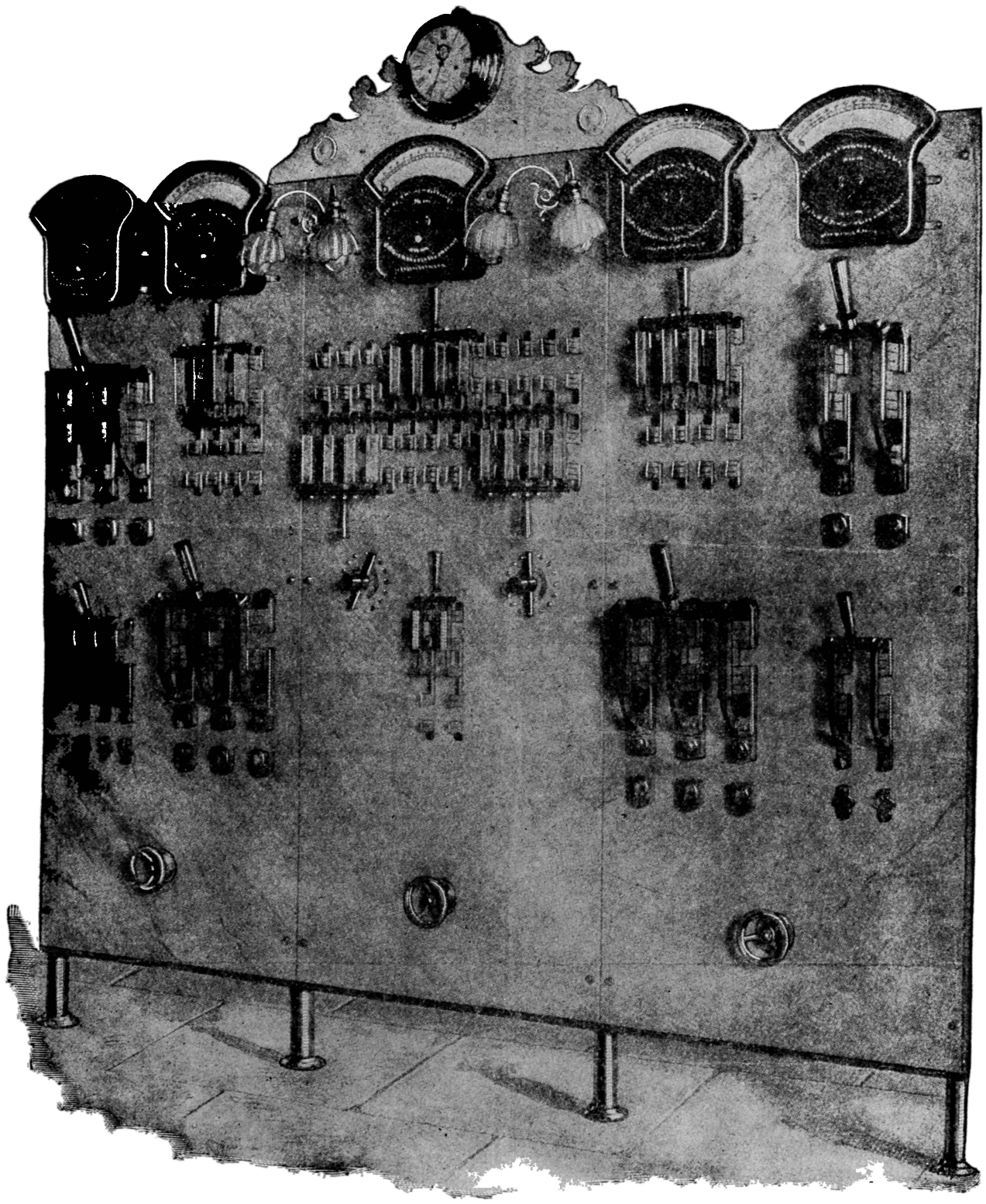

Fig. 3682.

The difference between the three-wire system and the ordinary two-wire system is that the former is an arrangement by means of which the voltage of the current can be doubled, and therefore the carrying capacity of the wires is increased ; for, as we have explained, the power of a current is equal to the product of the volts by the amperes ; and if the volts are doubled, the power is doubled without increasing the current strength. Now the strength of the current determines the carrying capacity of the wire, hence, if the voltage is doubled, the same wires will carry double the power. When this system is used, the lamps are

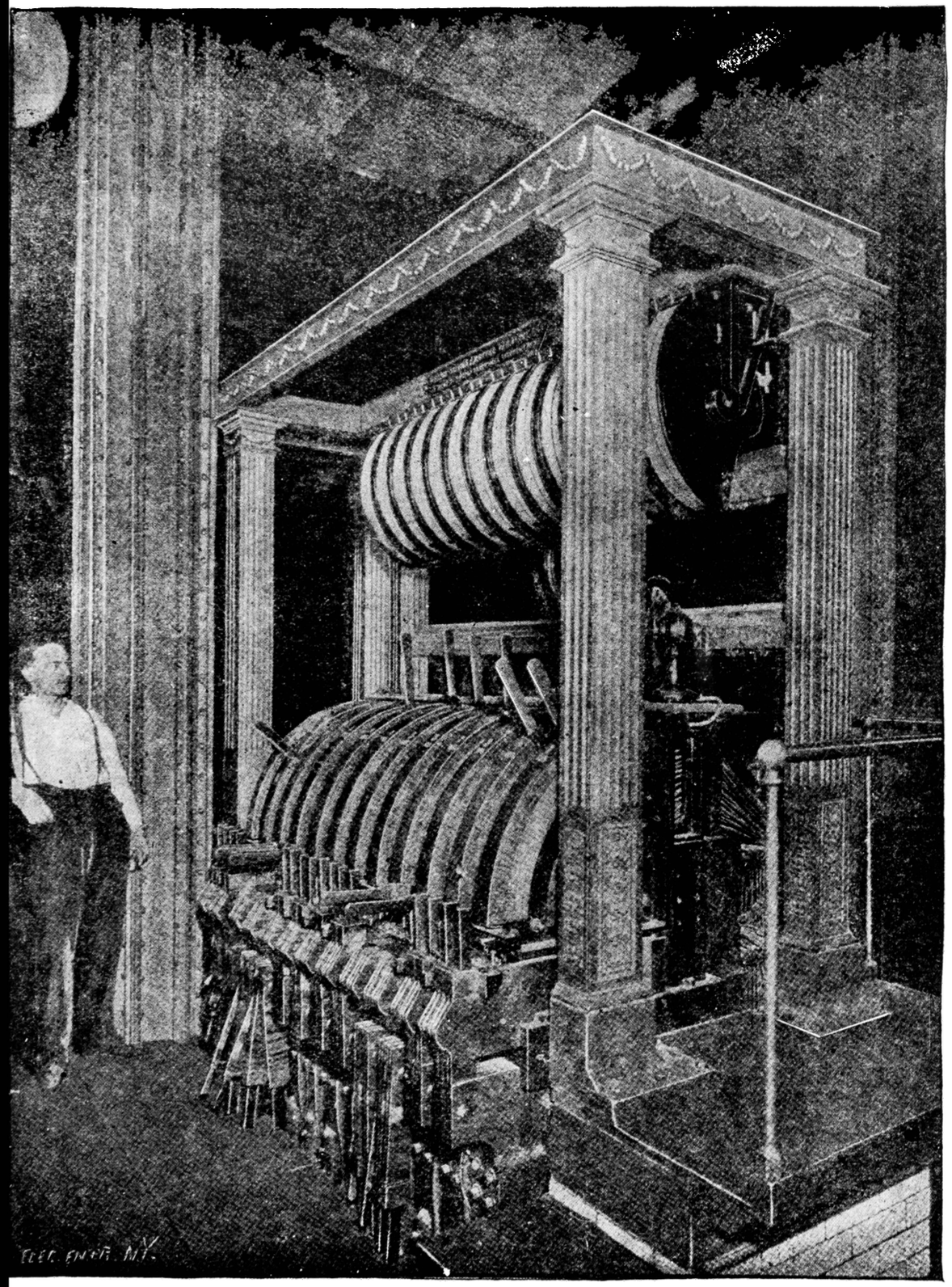

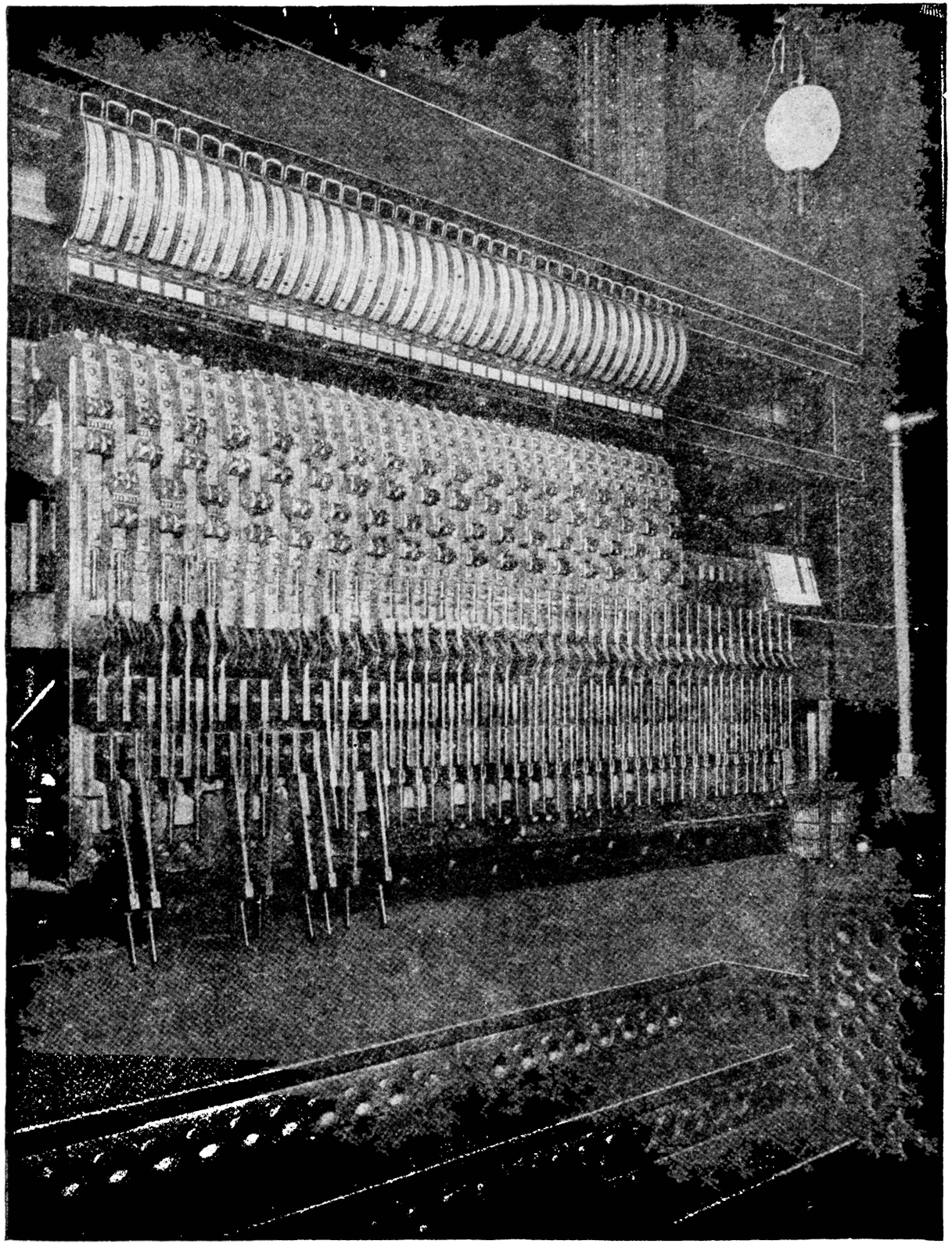

Fig. 3683.

arranged so that they are connected between the outside wires and the centre ; but in those that are connected between the top wire and the centre one, the current passes to the latter, while in those between the centre and the bottom wire the current passes from the centre wire to the bottom one. Now, if a building is wired for the three-wire system, the current when coming from the street mains will pass from top to centre bus through one set of lamps, and from centre to bottom bus through the other set of lamps ; but when the current comes from the generators, it will pass through both sets of lamps from the outside busses, that is, the top and bottom ones, to the centre one.

The instruments provided on this switchboard are one ammeter for each generator, and also a separate volt meter for each machine. In addition there is a volt meter that is used as a ground detector. Besides these instruments, there are a recording ammeter and a recording volt meter; also a differential galvanometer which is used for measuring the difference in voltage between the dynamo busses and any one generator. There are two small switches marked, one V. M. Sw, and one, Gd. Det. Sw. The first is a volt meter switch and is for the purpose of connecting one of the volt meters with any one of the generators so as to test its voltage, and the other switch is for the purpose of connecting the ground detector with any one of the generators.

The three switches at the bottom of the board are the main generator switches, and by opening any one of them it will disconnect from the system the generator directly under it.

As will be noticed, the three generators in this case are not of the same size ; the two outside ones being capable of delivering 800 amperes each, while the centre one can give only 400 amperes. This will be found to be the case by looking at the lower main switches, alongside of which will be found marked the strength of the current of the generator. From this example it will be seen that it is not necessary for machines to be of the same capacity to be connected in parallel in the same circuit or system of circuits. All that is necessary is that the voltage of the generators be the same.

As the object of the equalizing bus may not be understood, we will explain it : If two generators are running in parallel delivering current to the same circuit, each machine will do its share of the work, providing the voltage of the two is the same. If, however, one machine begins to increase its voltage, which it will do if the speed of the engine increases slightly, then this generator will begin to deliver more current to the line than its share, and the other one will begin to do less. A very slight difference in the voltage of the two machines will make a great difference in the disturbance of the current. Thus, suppose the two machines run, normally, at 400 amperes ; if the voltage of one drops as much as one per cent., the current delivered by it may rise to 500 amperes, and that of the other generator will drop to 300. Now the equalizing bus prevents this inequality in action to a very great extent, although not entirely. As will be noticed from Fig. 3685, this bus is connected with each generator at a point between the armature and the beginning of the series field coils. Now suppose any one of the generators begins to generate more current than its share ; if there were no equalizing bus this greater current would all pass through the series field coils of the generator, and thereby aggravate the trouble by increasing the field strength. The equalizing bus, however, allows a part of this increased current to pass through it to the series field coils of the other generators, and thus the magnetism of these is increased. In consequence of this increase in magnetic strength, these generators also increase their voltage, and, therefore, their current ; and, as a

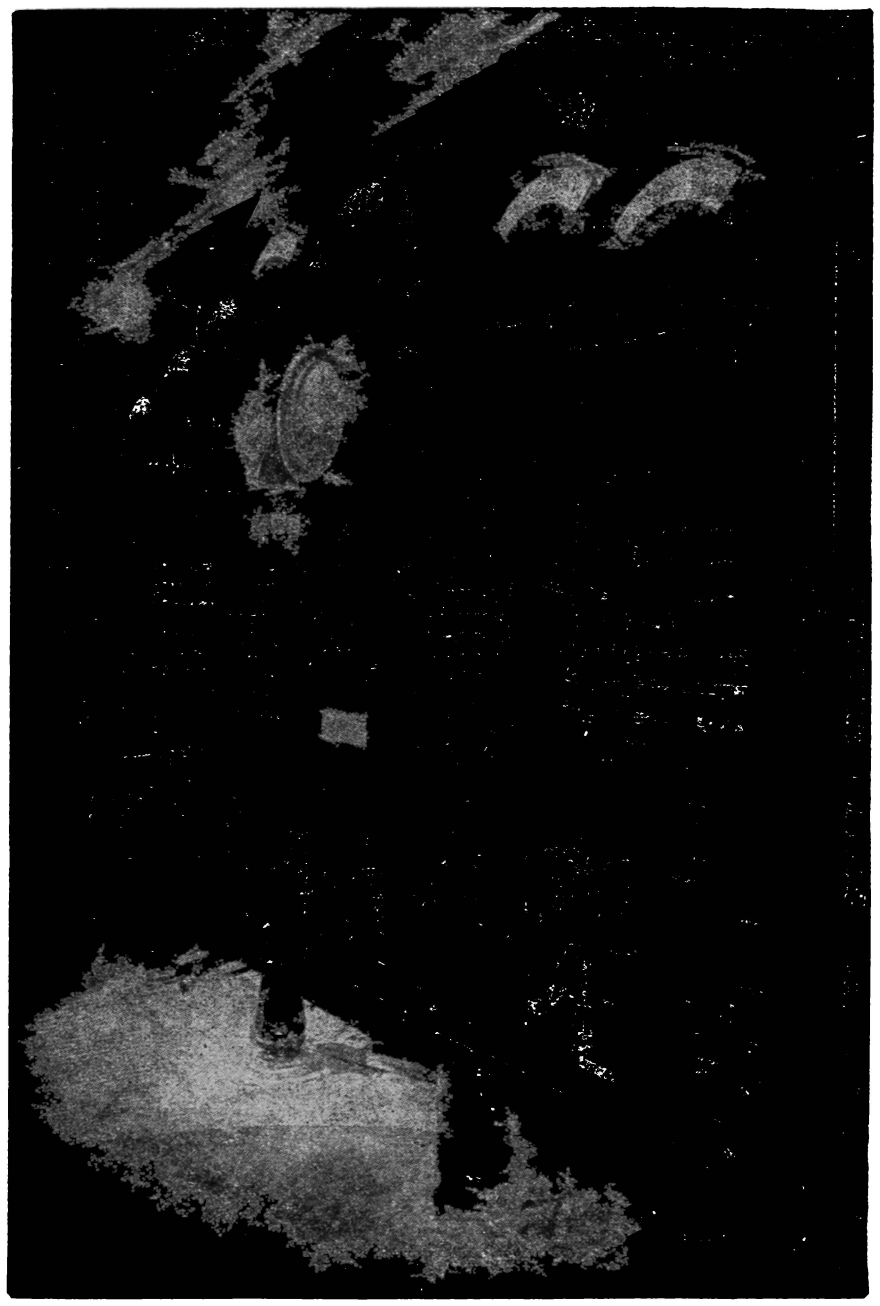

Fig. 3684.

result, the effort of the first machine to run ahead of its followers is counteracted. The counteraction, as has just been said, is not perfect, but it is sufficient for all practical purposes.

We will not undertake to explain the manner in which the wire connections run from the several instruments, volt meters and ammeters, to the circuit breakers, the V. M. switch, the Gd. Det. switch, the Diff. Gal. switch, etc., as these can be readily traced out; and, in fact, it will form a good exercise to work out the connections unaided.

To fully understand diagram Fig. 3685, it should be compared with Fig. 3684, so that the actual appearance of the devices shown in outline in the diagram may be seen. In the diagram the circuit breakers, as an example, are indicated simply by a rectangular outline; but if we look at the illustration of the front of the board, we will find that in the same position there are shown three very massive devices; therefore, by comparing the two figures, not only can the manner in which the connections are made be traced out, but also the form, and, to some extent, the construction of the switches, instruments, etc.

The switchboards we have been considering are of the kind used with constant potential continuous currents; for continuous currents of constant strength, slightly different boards are used, this difference arising from the fact that some of the devices are not required, while others are modified in form. Thus, as with currents of constant strength circuit breakers are not necessary, these are not found on such switchboards. On the other hand, as the voltage of the currents is many times higher than that of the constant potential system, the switches have to be modified in construction so as to provide a greater distance between the contacts joined by the switched lever when in the closed position. As the voltage of the circuit, in such cases, is dependent upon the demand of the circuit, and is, therefore, not of any importance, volt meters are not required. As these constant strength currents cannot be connected in parallel, it is not necessary to provide switches for parallel connection. In any case, however, the object of a switchboard is to be able to concentrate at one point all the apparatus required for handling with ease the various parts of the system; therefore, the arrangement of the switches, the instruments, and other devices will be such as the peculiarities of the current to be handled demand. On this account, although each switchboard will be well adapted to the requirements of the system for which it is designed, it cannot be used in any other.

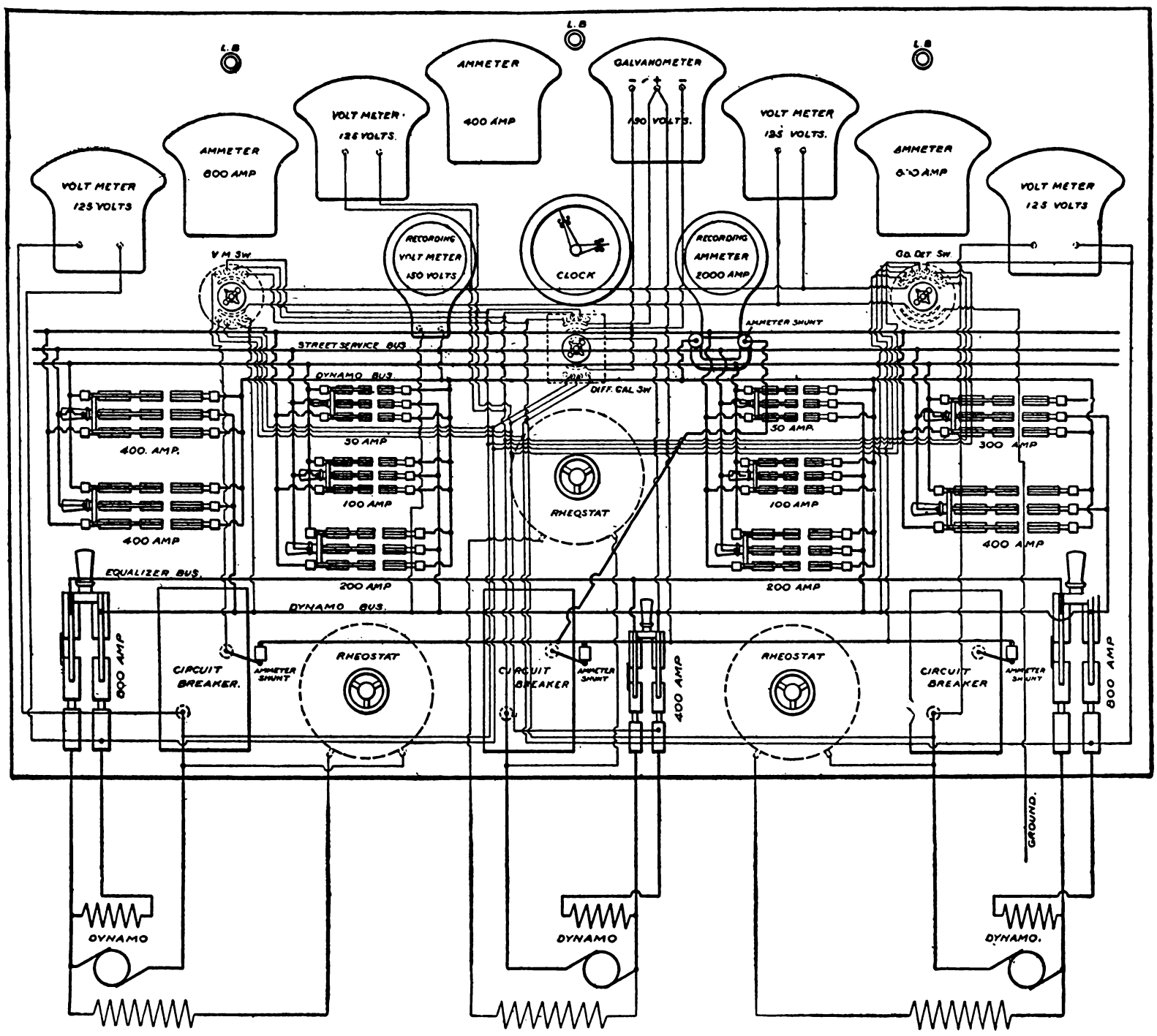

DIAGRAM OF SWITCHBOARD CONNECTIONS.

Fig. 3685.

DIRECTIONS FOR SETTING UP, AND FOR THE DAILY MANAGEMENT AND CARE OF ELECTRICAL MACHINERY.—Electrical machinery of every kind, whether generators or motors, should be located in a place that is clean, dry, well lighted, and sufficiently spacious to allow free access to every part of the apparatus. If the location of a generator, or motor, is such that any of its vital parts cannot be reached without being put to great inconvenience, it is very apt to be neglected, even if the attendant is conscientious, as the best of men will persuade themselves that the inaccessible parts are running in proper order, when they contemplate the difficulty of making an inspection.

The foundations of generators, especially for those of large size, should be substantial, although not as much so as those for steam engines.

The foundation for motors and small generators can be made sufficiently rigid if it consists of a substantial wooden frame fastened to a solid floor.

The frame of any kind of electrical machine must be thoroughly insulated from the ground, and the higher the voltage of the current passing through it, the more perfect the insulation must be.

The most mechanical way in which to insulate an electrical machine is to mount it upon a wooden frame, which in the case of large generators should be set upon a foundation of masonry. This frame to be a sufficiently perfect insulation should be impregnated with some moisture-repelling substance, such as oil, varnish, or paraffine. The latter is the best of all, but to be effective it must be applied to the wood when the latter is heated, so that the paraffine may penetrate well into the body of the wood.

If the generator is of the belted type, and is small, it will be provided with a sliding base so as to take up the slack in the belt; but this practice is not followed in large generators, hence in such cases the belts must be put on as tight as possible in the start.

Motors are always arranged so as to take up the slack in the belt. In handling machines, whether in the operation of setting them up, or, subsequently, when repairs become necessary, it must be remembered that all the parts upon which wire is wound, and also the commutator, cannot be handled as roughly as ordinary machinery. If a machine is small, it will in all probability be shipped assembled and ready to run as soon as mounted upon its foundation; but large machines are generally shipped in the dismounted form, and have to be put together upon their foundations. When this is the case, all the joints must be perfectly clean before the parts are assembled, and this applies particularly to those parts that constitute the field magnets.

In lifting the field magnet coils or the armature, and also the commutator, if this is separate and to be connected after being put in position, ropes should be used, and these must be separated from parts that cannot withstand much of a strain by means of blocks of wood. If possible, armatures should be lifted by the shaft or other metallic parts. In lifting an armature and commutator, the lifting ropes must not be placed around the commutator.

With belted machines, it is necessary that their shaft be properly aligned with the driving shaft to insure true running of the belts.

When large machines are assembled, the bearings should be well oiled before the shaft is dropped in, so that there may be no danger of cutting them by running dry in the act of starting.

The floor around a generator or motor should be covered with wood well saturated with paraffine, oil, or varnish, so that the attendant may not be in danger of receiving a shock by standing upon an uninsulated floor. The wooden covering should extend at least three feet from the base of the machine in every direction. If the machine carries a current of low voltage, such as is used for incandescent lighting, there is no danger of the attendant receiving a serious shock, as such voltages are not dangerous; but they are painful, and may cause a man to lose his balance and fall into the belt, and thus receive serious injuries. With arc-lighting dynamos, and with all types of alternators, the voltage is so high as to produce instant death; and with these machines it is necessary that the floor be perfectly insulated, and that all metallic surfaces within reach of any part of the machine be covered with wood.

Large motors and generators should be surrounded with a railing, so that the attendant may have a proper point of support when examining or adjusting parts of the machine that are not easily reached.

After a generator has been set up and is ready to run, it should be tried without current for several hours, so as to work the bearings down to a smooth surface. If the bearings heat, the machine should not be made to deliver current until the defect is remedied. When the bearings are found to be in proper running condition, the machine should be tested to ascertain whether it is perfectly insulated from the ground and also as to whether the field and armature wires are insulated from the frame. This testing can be done with an ordinary volt meter and a current from another machine, or with a galvanometer and a battery current, or finally with a magnetic bell.

LOCATION OF SWITCHBOARD, AND WIRE CONNECTIONS BETWEEN IT AND THE GENERATORS.—The switchboard should be located where it can be readily seen from where the generators are placed, unless the plant is of such large dimensions that this course becomes impracticable or undesirable for one reason or another. There should be sufficient distance between the back of the board and the wall to allow a man to work freely, and, if possible, the wall should be provided with windows, so as to afford an abundance of daylight. If this course cannot be pursued, then incandescent lights must be provided at as many points as may be required to illuminate every portion of the back of the board.

All the wires running from the generators to the switchboard should be larger than the regular line wires, and this applies particularly to the wires running to the equalizing bus, as the effectiveness of this connection depends largely upon having a very low resistance between the generators and the bus bar.

All the wires leading from the generators to the switchboard should be perfectly insulated from the ground and from each other. If this is not done, serious results may follow; for the circuit breakers are connected in the circuit in such a manner that they will be a protection against any defect in the insulation that occurs beyond the switchboard, but will not act if the defect is between the board and the generators.

All the wires leading from the generators to the switchboard must be so located that there is no chance for them to be struck by lightning, and this means that they must be kept within the building throughout their entire length. This is necessary for the same reason as given in connection with circuit breakers, namely, that the lightning arresters only protect the circuit against lightning that strikes outside of the station.

Switchboards should be made so as to not reach all the way down to the floor, but to be mounted upon pedestals. This is necessary so as to prevent the accumulation of dust or dirt of any kind. In an electric station cleanliness is of as much, if not more, importance as in a kitchen, and successful running of the machinery and other apparatus cannot be expected unless every part of the station is kept perfectly clean.

DIRECTIONS FOR STARTING UP THE GENERATORS.—In starting up a single generator plant, all that is necessary is to make sure that the bearings are lubricated, that the electrical connections are in proper order, and the commutator brushes properly set. If, however, the plant consists of two or more generators, it is necessary to observe certain rules to avoid the possibility of serious mishaps. The first generator may be started in the same manner as would be followed if there were only one machine, but this cannot be done with the second, third, or other generators. The proper course to pursue is to run the engines, if there are more than one, up to the full speed; then, after the first generator has been connected with the line by turning the proper switch upon the switchboard, start the other generators to generating without being connected with the switchboard. Test the voltage of each generator with the volt meter, and if there is a switch in the wire running to the equalizing bus, close this. When the voltage of the generator is the same as that of the line, throw the switch that connects it with the bus bars. Proceed in this manner in connecting each generator with the line, and then there will be no trouble. If a generator is connected with the line while it is running below speed and the voltage is under the standard, the result will be that the greater voltage of the line will force a current back through the generator and thus cause it to run as a motor. Ordinarily this action will not result in serious damage, for as soon as the generator begins to act as a motor, it will increase its speed, and thus its voltage, and thereby prevent the flow of a reverse current through it; but under certain conditions of current in the line, and of speed and regulating qualities of the steam engine, the effect may be that the speed will rise to a

dangerous point before the increasing voltage can stop it, hence it is necessary to be careful to have the generators brought up to full speed and to full voltage before connecting them to the line.

DIRECTIONS FOR THE DAILY CARE OF GENERATORS.—All parts of the machine must be kept perfectly clean, and it is particularly necessary to prevent the accumulation of oil upon any of the wire of the field coils or of the armature. The dust thrown off the commutator brushes must not be allowed to remain upon any part of the machine, and this is especially important if the brushes are made of metal, which is likely to be the case if the current generated is of low voltage.

As the machine is a huge magnet, it will attract any article made of iron or steel that is close to it; therefore it is necessary to keep all such things as files, hammers, wrenches, nails, etc., out of the way, and all the tools used about the generator when it is in operation should be made of brass if possible. About the only thing that has to be used around a generator when it is running is an oil-can, and this can be made of brass just as well as of sheet tin.

The bearings must be kept well oiled, particularly those of the high-speed machines. Most generators are provided with self-oiling bearings, but it must not be taken for granted that these will take care of themselves, for automatic devices are liable to fail when least expected. The bearings, therefore, should be examined often, whether of the self-oiling type or not, and the oil should be of the kind suitable for the speed, and entirely free from grit. To secure this last condition it is best to use a filter. The bearings of a new machine should be watched carefully for several days until you are sure that they have worn down to a good bearing.

Bearings must not be allowed to run warmer than a blood heat. If they heat more than this, use an abundance of oil until they cool down, and endeavor to ascertain the cause of the undue heating, which may be one of the following: Insufficient amount of oil, due to the stopping up of the oiling channels; gritty oil; boxes too tight, or belt too tight.

Special care and attention must be given to the commutator, and the brushes should be set at all times so as to run with the smallest possible spark. Just what the size of the spark should be cannot be stated; for what is a small spark for one type of machine is large for another. The smallest sparks obtainable in arc dynamos would be considered destructive, and would actually be so, if allowed in generators used for incandescent lighting. With machines of the latter type, the commutator should present a polished appearance, and the surface should run perfectly true. When in the best condition, the surface has a dark glazed appearance, and is entirely free from scratches. Whenever a commutator surface becomes rough from excessive sparking, it can be cleaned with fine sandpaper, but never with emery paper. To clean off a commutator, use a cloth, but never waste, as the lint from this will adhere to the surface and cause the brushes to spark until it is rubbed off or burned off by the sparking. A commutator should not be cleaned with sandpaper or, in fact, with anything while the brushes are resting upon it and the current is flowing. As long as the commutator runs true it can be smoothed up if necessary with a piece of sandpaper, as already explained; but when it gets out of true, cleaning it off will at the most only afford temporary relief. In such cases the only course to pursue is to have it turned up in a lathe, or by the use of a special tool made for the purpose, which can be attached to any generator, and true up the commutator in place. Sometimes one of the commutator segments will become loose, and either sink below the surface or rise above it. In such cases it is necessary to even up this segment, and it can be done by removing the end of the commutator and blocking the segment up if it has dropped down, or by simply filing it down to the proper level if it has sprung up. In either case it will be necessary to secure the segment properly after it has been trued up, and the manner in which this can be done will depend upon the construction of the machine.

The position in which the brushes run with the least spark is called the non-sparking point, and it is not far from midway between the centres of the poles. This point is not fixed, but changes with the strength of the current delivered by the generator. Some generators are so proportioned that the non-sparking point does not shift enough with the maximum variations in the strength of the current to produce any noticeable effect upon the sparking, but in other machines the change of load, if great, will seriously increase the sparking. With machines of this latter type it is necessary to change the position of the brushes when the load is varied, but if the variations in the load are frequent, and of an uncertain amount, it is not possible to keep the brushes constantly set to the best position. In such cases, all that can be done is to find the point at which the average running is the best, and this can only be found by actual trial. If the changes in the load come at regular intervals and are of long duration, then the brushes can be readjusted for each change. For example, suppose the generator is running in a station in which the load will be light from about nine in the morning to five in the afternoon, and then heavy from this time until midnight. In such a case it is clear that in the morning the brushes can be set for the day run, and at five in the evening they can be set for the night run.

If the generator is of the two-pole type, the brushes must rest upon the commutator diametrically opposite; but if the machine is of the multipolar type, there will be as many sets of brushes as there are poles, and the circle must be divided up equally between them; so that if there are, say, six sets of brushes, the distance between them must be one-sixth of the circle, and for an eight-brush machine the distance will be one-eighth of the circle. If the brushes are not equally spaced, they will spark. If the brushes are of carbon and are held in a position perpendicular to the commutator surface, as is the most common custom, there will be no danger of the brushes not being properly spaced, and in such a case the sparking can only be reduced by adjusting the position of the whole number of brushes, which is done by moving the brush-holder frame. If the brushes are metallic, they will be held at an angle of less than ninety degrees to the commutator surface, and in all probability the construction of the brush holders will be such that the angle of the brush can be varied; if such is the case, the distance between the brushes will not be equal unless they are all set at the same angle. With such a generator it is well to provide a piece of sheet brass cut to the same circle as the commutator, and of a length equal to the proper distance between the brushes. With this gauge, the brushes can be set, individually, so as to be the right distance apart, and then the adjustment of the whole set will bring the brushes to the non-sparking point just as accurately as in the case of the perpendicular brushes. When the brushes are metallic and rest at an incline to the commutator surface, if the distance between them is not uniform some of the brushes will spark more than others.

The principal causes of sparking, in addition to the improper setting of the brushes, are as follows: Brushes set and not having a full bearing upon the commutator. Brushes not pressing upon the commutator with sufficient tension. In wire and sheet-metal brushes the wires or the leaves may be spread out and be filled with dirt, which, in dropping out of place, gets between the brush and the commutator. The ends of the brush, if metallic, may have been fused into a solid mass by a previous excessive sparking, and this solid part will chatter and bounce off the commutator surface. The remedy for these defects is obvious. If the bearing of the brush is defective, reset it; if the tension is not enough, increase it; if the brushes are full of grit and oil, clean them; if the end is fused into a solid mass, cut it away. Carbon brushes sometimes have hard spots, and as these do not wear away they cause an imperfect contact, which can be remedied by filing off the hard spot on the end of the brush.

There are other causes that are not due, directly, to defects in the brushes or the manner in which they are set. These are enumerated in the following: Commutator segment loose, either high or low. The remedy for this is to true up the commutator and secure the segment in place, as already explained.

There may be an accumulation of dust around the commutator and the wires leading from the armature to it. This is not an uncommon cause of sparking where metallic brushes are used. The cure is to clean off all the parts.

Some of the connections between the commutator and the

armature wire may be imperfect, and this can be remedied by resoldering, if the joints are soldered, or by tightening the screws, if screw connections are used.

There may be partial short circuits between the commutator segments, caused by the accumulation of dust in hollows formed in the insulation between the segments by the burning action of the sparking. This can be remedied by cleaning out these places and applying a few coats of shellac. The armature may be damp. This can be remedied by drying it out and then giving it two or three coats of shellac; but to make the cure permanent the conditions that brought about the dampness in the armature must be removed.

A short circuit in the external circuit, or any cause that results in an abnormal increase in the current, will cause excessive sparking; but this cannot be cured except by correcting the outside defect, whatever it may be.

If the generator is overloaded, the brushes will spark unduly. The ammeter will show the cause of the sparking in such cases, and if it does not, the steam engine will, as the increased load will reduce the speed before it will affect the sparking; that is, if the generator is well designed and not overrated in capacity. Another way to ascertain whether the machine is overloaded is by noting the temperature of the armature. As this is in motion it is not easy to tell whether it is too hot or not; but with a little experience the temperature of the air near the armature surface can be judged, and if it is much above the normal the fact can be ascertained.

Sometimes the polarity of the field magnets of the generator becomes reversed for one reason or another, and if such is the case the machine must not be connected with the bus bars, for it will draw the current through it and thus act the same as a short circuit. The effect in most cases will be to cause the circuit breakers to act, and thus open the circuit through all the generators in service at the time, but the result may be more serious than this.

If the polarity of the generator field is reversed, the fact can be ascertained by the aid of the volt meter. If when this is connected with the generator circuit, before the machine is connected with the bus bars, the indicator moves slightly in the direction back of the zero mark, it is because the current flows in the reverse direction, due to a reversal of polarity. The poles can be rectified by disconnecting the shunt coil terminals and passing through them a current taken from the bus bars. If this current is not passed through the coils in the right direction, the volt-meter indicator will move backward. If the current is then reversed, the indicator will move forward. In connecting the shunt coils with the bus bars, all the resistance of the field regulating rheostat should be placed in the circuit. After the polarity has been rectified the shunt coil terminals must be reconnected in the proper manner and the generator started as under ordinary conditions; that is, it must be run up to the full voltage before being connected with the bus bars.

Sometimes, when a generator is running, the sparking begins to increase, and finally becomes a ring of fire all the way around the commutator. This effect is due to the roughness of the surface, in consequence of which the commutator acts as a file and the particles cut away from the brushes fly around as burning sparks. The remedy for this condition is to smooth up the surface with a piece of fine sandpaper.

If one of the generators gives out while running, it must be cut out of the circuit at once, otherwise serious results may follow.

In cutting out a generator the load on it should be reduced to the lowest point, so that the engine may not tend to run away by the sudden removal of the load. To cut down the current, all that is necessary is to advance the handle of the field regulator slightly so as to reduce the voltage of the machine. This operation must be done with care, however, for a very slight reduction in the voltage is all that is required.

The ammeters of the individual generator circuits should be watched, and if the machines are not taking their proper share of the load, they should be equalized, which is done by raising the voltage on those that are running underloaded. This adjustment of the voltage is effected by turning the field regulator handle back to increase the voltage, and forward to reduce it. In some cases, where the line voltage is fully up to the standard, it may be best to cut down the pressure of the generators that are doing more than their share of the work; in other cases it may be best to cut down the voltage of some and increase that of the others; this will depend upon the voltage of the current passing into the line; that is, whether it is above or below the standard.

Well constructed and properly handled generators are not liable to get out of order, but breakdowns will occur under the most favorable conditions; some of these are of a character that require the services of the repair shop, while others can be remedied by the attendant. The mishaps that are the most common are burned-out armature coils, burned-out field coils, broken wires in the armature coils, loose commutator segments. All these can be remedied without the assistance of the repair shop if they are due to defects upon the surface, but not otherwise, unless the attendant is skilled in the construction of electric machines and has the necessary appliances for doing the work.

It is very important that the shaft in generators of the multipolar field type be kept as near central with the faces of the pole pieces as possible. This is also true of two-pole machines, but not to so great an extent, as with these the principal objection to the shaft being out of centre is that it is liable to cause the armature to come in contact with the pole pieces; but with the multipolar fields, if the armature is not central, the voltage of the currents generated on the opposite sides of the armature will not be the same, and as a result the brushes on one side of the commutator may run without spark, while on the other the sparking will be destructive. In addition to this the pull of the poles on one side will be greater than on the other, and the strain on the bearings will be increased. If the armature is very far out of centre, the voltage of the current may be actually reduced, owing to the fact that in some of the wires the electromotive force will be acting in opposition to the main current.

There are a few points that it is well to remember in connection with the care of generators; these are as follows:

Be sure that the generator is running up to full speed and that the engine governor is acting properly, before connecting the machine with the bus bars.

If the generators are of the belted type, be sure that the belts are in perfect order and tight enough not to slip.

Keep all the connections of the generators, as well as those of the switchboard, firm, and with the contact surfaces clean, bright, and free from corrosion.

Keep every part of the room in which the generators and the switchboard are located clean and dry.

Keep all the insulation of the generators free from oil and dust, especially metallic dust, and do not allow moisture to collect upon the insulators that support the wires leading from the generators to the switchboard.

Keep all the bearings of the generators well oiled, and if they are of the self-oiling type, examine them often to see that they are working properly.

Keep the brushes set so as to run without spark, or with the smallest possible spark, but do not disturb them as long as they run well.

If the brushes spark, ascertain the cause, if possible; if not, endeavor to correct the difficulty by resetting them, but do not disturb them unless the sparking is more than it should be. Go upon the principle that it is wise to leave good enough alone.

The insulation of the armature, the field coils, and the commutator should be tested from time to time so as to discover any weakness as soon as it begins to appear.

Never connect a generator with the bus bars—that is, never close the main generator switch upon the switchboard—until you are sure that the voltage of the machine is the same as that of the main circuit, and if there is a switch in the equalizing bus wire, be sure that this is closed.

All the foregoing directions relate to the care of continuous current generators and switchboards, but they are equally well applicable to alternating current machines, with the exception that as these latter are not provided with commutators, all that portion of the directions that relates to this part of the machine

can be disregarded. It may be added, however, that, as the voltage of alternators is very much higher than that of the continuous current machines, it is necessary to be extra careful to have all the wires perfectly insulated and to keep them so by preventing the accumulation of dirt or dust, and also by keeping them perfectly dry.

Electric motors, as we have shown, are simply electric generators reversed; hence the attention they should receive is the same as that of the generators. The only point upon which it is necessary to add further directions is in the matter of starting and in the care of the motor starters.

In starting a motor, the handle of the starter should be moved around as fast as possible without causing the speed of the machine to increase too violently or by jumps. The resistance in the starters is not made of sufficient size to withstand the heating effect of the current for more than a few seconds, at the most one minute; therefore, if the current traverses it for a greater time than this, the apparatus is liable to be injured.

Never leave the handle of a motor starter partly turned on; always move it around to the last contact before leaving it. If the starter is of the overload or over and under load type, the handle cannot be left in a midway position, as it will not stay there, but it can be so left with the simple form of starter; hence it must be remembered that the effect of leaving the handle in any position but the last one—that is, as far around as it can be turned—means the certain destruction of the starter.

Motor starters are sometimes made of sufficient size to be kept in circuit, so that the speed of the motor may be reduced thereby; but when so made, they are called speed regulators, and can be distinguished from the ordinary starter by the fact that they are very much larger. Speed regulators can be kept in the circuit continuously, but motor starters cannot.

THE MANAGEMENT OF ARC LAMPS.—Arc lamps are very delicate forms of mechanism—not delicate in the construction, but in their action. They are operated by a very small force, namely, the weight of the carbon rod, and on this account must be kept in perfect running order or they will not act well. The mechanism in these lamps is kept from moving by the action of the magnets with which they are provided; but when the distance between the carbons becomes sufficiently great to require that the rods be fed closer together, then the mechanism is released, and it is set in motion by the weight of the rod. If the gearing is not clean, or if the rod is not clean, the friction will be more than the weight of the rod can overcome, and as a result the mechanism will not move. The successful operation of these lamps, therefore, depends upon their being kept scrupulously clean, and this is particularly true of the rod, especially if the mechanism is of the clutch type.

It is also necessary to keep the insulation of the wires and the magnet coils in perfect condition and to prevent the accumulation of dirt or moisture. Arc lamps should not be set up in places that are not perfectly dry; and when they are inspected, the operator should always stand upon a dry board and be sure not to touch any metallic objects while handling any part of the lamp or the wires leading to it.

When carbons are fastened to the rods—that is, when the lamp is trimmed—the carbons must be so fastened that the points of the two come in line; if this is not done, the upper carbon will be liable to burn off on one side and thus throw the light in one direction only. In addition to this, if the points are enough out of line, the upper carbon will slip down by the side of the lower one and thus make a perfect contact and put out the light.

In the following pages we furnish the wiring diagrams of the machines of some of the most prominent manufacturers, and also the special instructions they furnish for installing their apparatus and for its subsequent management.

THE CROCKER-WHEELER DYNAMO.*—The diagrams following show the manner in which the machines of the Crocker-Wheeler Company are wound and connected, and as these diagrams are constructed upon the conventional plan usually adopted by all makers, it will serve to make all such drawings more readily understood if the brief explanation of Figs. 3686 and 3687, given below, is carefully read.

In Fig. 3686 the letters N and S indicate the position of the north and south poles of the machine, and from this it will be seen that

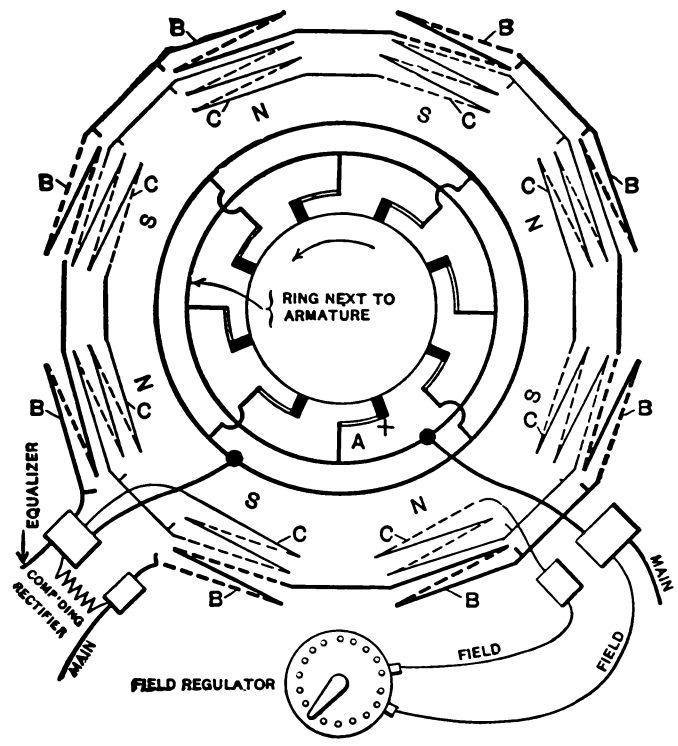

280 TO 112 COMPOUND WOUND DIRECT DYNAMO WITH FIELD REGULATOR.
Fig. 3686.

this diagram corresponds to an eight-pole generator. The zigzag lines marked B represent the series coils of the field, and the lines marked C represent the shunt coils. The heavy line marked "equalizer" runs to the equalizing bus bar on the switchboard, the office of which has been explained in connection with switchboards. The two circles surrounding the commutator and com-

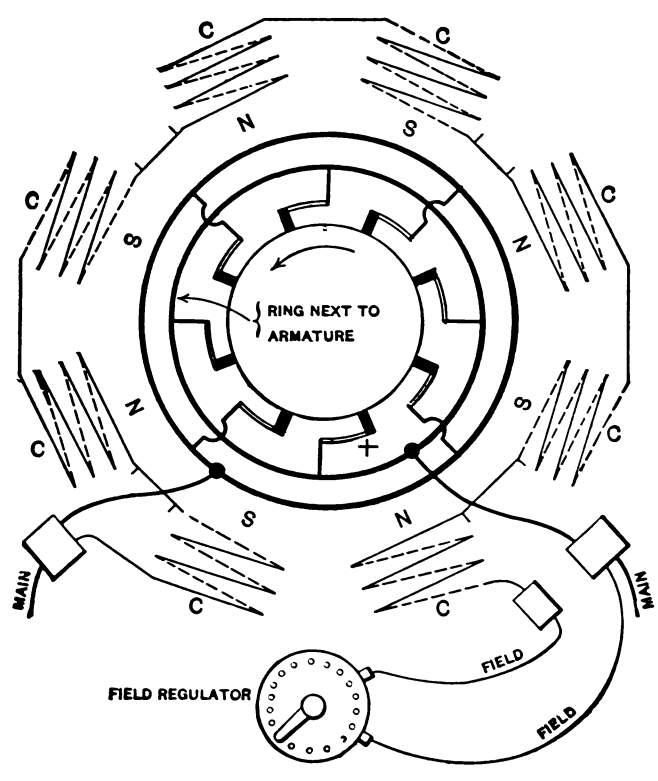

280 TO 112 SHUNT-WOUND DIRECT DYNAMO WITH FIELD REGULATOR
Fig. 3687.

mutator brushes are the connecting wires by means of which the brushes are joined, one-half of these connecting with each ring, as is clearly shown. From the outer ring the current passes to the B field coils, coming out by the main-line wire seen on the left of the diagram. The inner ring connects directly with the other main-line wire. One end of the C coils starts from the block to

* Furnished by Crocker-Wheeler Company.

which the equalizer wire is connected, and the other end goes to the field regulator, and from this to the main-line wire on the right. By tracing the connection between the several B coils and the several C coils it will be found that they are both in series.

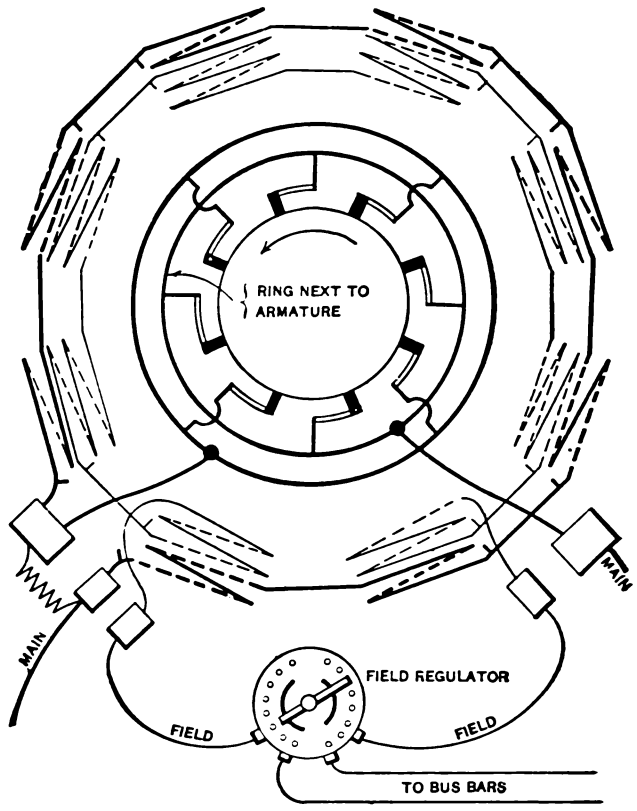

280 TO 112 REVERSING COMPOUND-WOUND DIRECT DYNAMO WITH REVERSING FIELD REGULATOR

Fig. 3688.

The current in the C coils is regulated by turning the handle of the field regulator, shown at the bottom of the diagram.

The only difference between Figs. 3686 and 3687 is that in the latter the coils B are removed, owing to the fact that the diagram

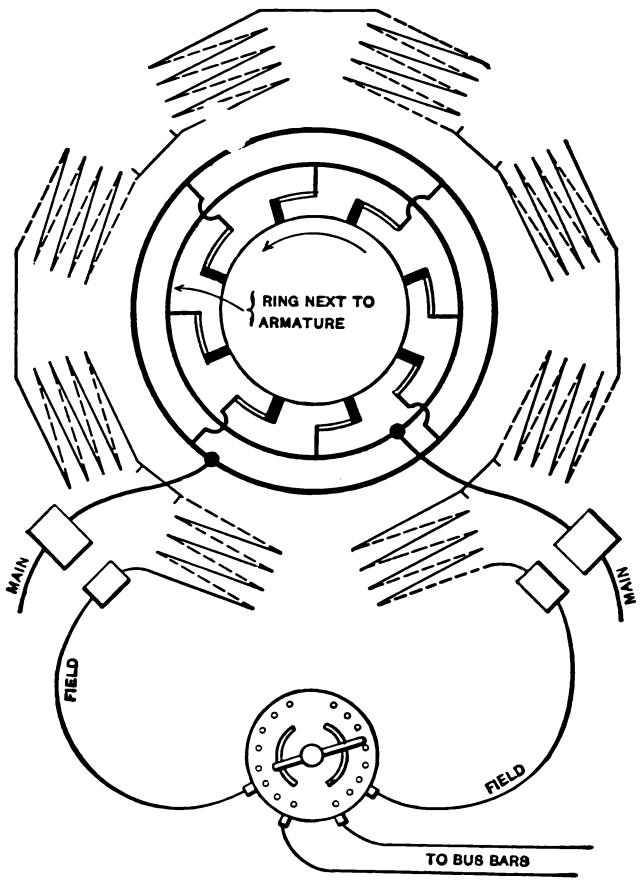

280 TO 112 REVERSING SHUNT-WOUND DIRECT DYNAMO WITH REVERSING FIELD REGULATOR

Fig. 3689.

represents a simple shunt winding; hence only the C coils are necessary.

With this explanation there should be no difficulty in understanding any of the diagrams given in the following pages.

The machines are connected, according to the service required, as shunt, compound, reversing shunt, and reversing compound dynamos, as shown in Figs. 3686 to 3689 and 3690 to 3693, for counter clockwise rotation facing commutator.

The lines in the diagrams indicate the direction of the winding

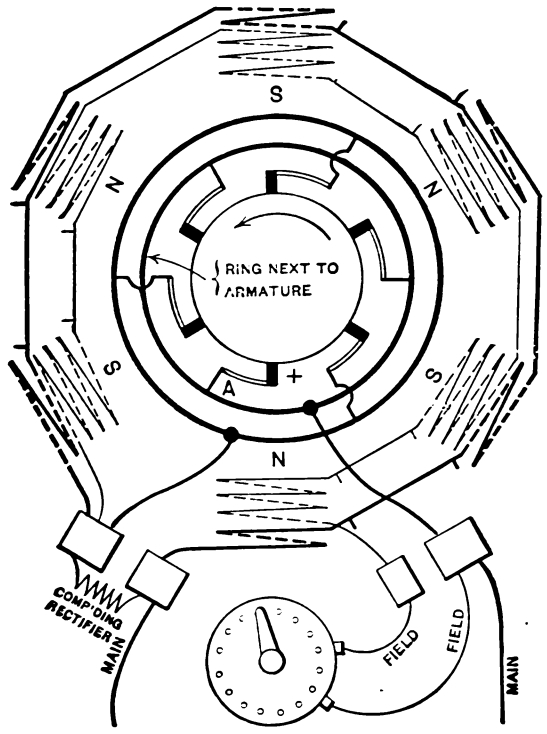

84 TO 33 COMPOUND-WOUND DIRECT DYNAMO WITH FIELD REGULATOR

Fig. 3690.

of the field coils by showing dotted that portion of the convolution which passes behind the poles.

The inner end of each winding, or the terminal of the bottom layer, is indicated by a "tail" at right angles to the wire, thus : ⌋.

The plain shunt winding is used in dynamos which charge

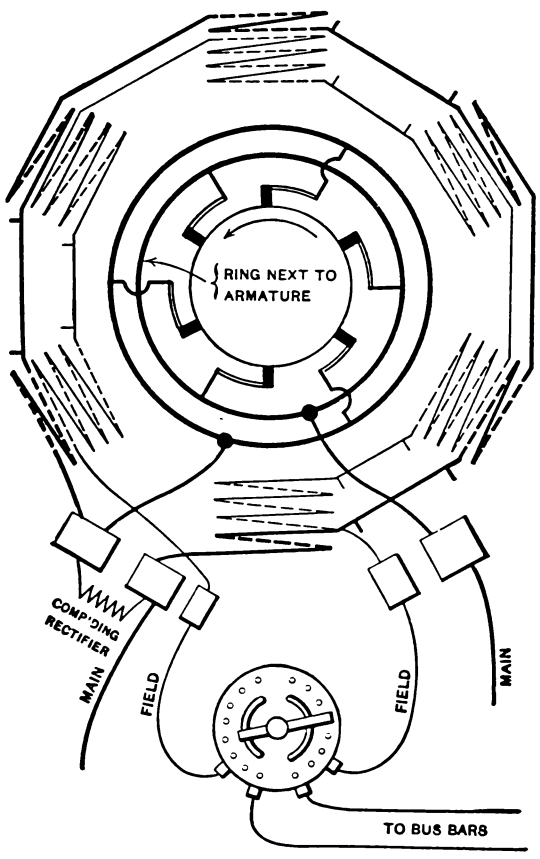

84 TO 33 REVERSING COMPOUND-WOUND DIRECT DYNAMO WITH REVERSING FIELD REGULATOR

Fig. 3691.

storage batteries or do any kind of electrolytic work. The compound winding is the one most commonly used for general duty, as it makes the voltage at the mains practically constant, no matter what the load is.

Reversing dynamos differ in their connections from the non-

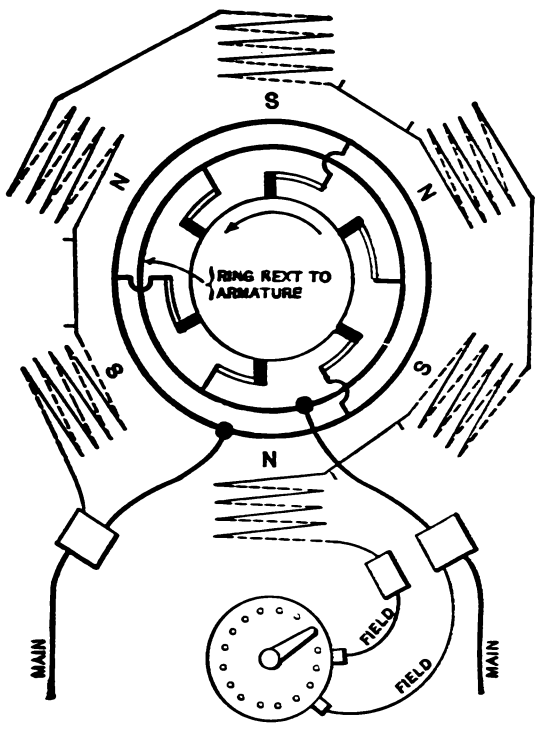

84 TO 33 SHUNT-WOUND DIRECT DYNAMO WITH FIELD REGULATOR

Fig. 3692.

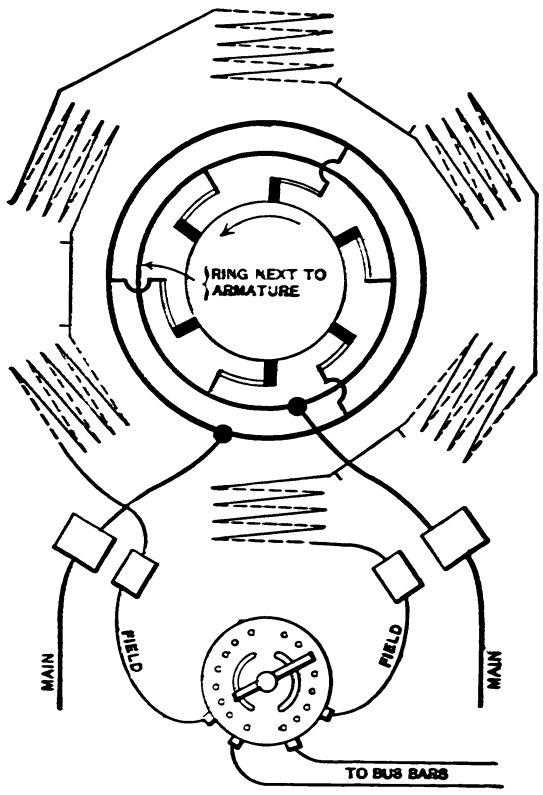

84 TO 33 REVERSING SHUNT-WOUND DIRECT DYNAMO WITH REVERSING FIELD REGULATOR

Fig. 3693.

reversing only in having their shunt fields entirely disconnected from the armature. They must be separately excited, and connected to the bus bars of the switchboard through a reversing field regulator. They are used chiefly for driving and controlling motors on potential systems of control. For an opposite direction of rotation the connections remain unchanged; but the brush-holder brackets should be reversed, which is most easily accomplished by turning the rings around.

The brackets should be placed so that the one at A is connected to the ring nearest the armature, except in sizes 56 and 33 with brush-lifting mechanism. In these two cases only, the bracket at A and cable shown connected to inner ring should both be connected to the outer ring, which is the ring farthest from the armature.

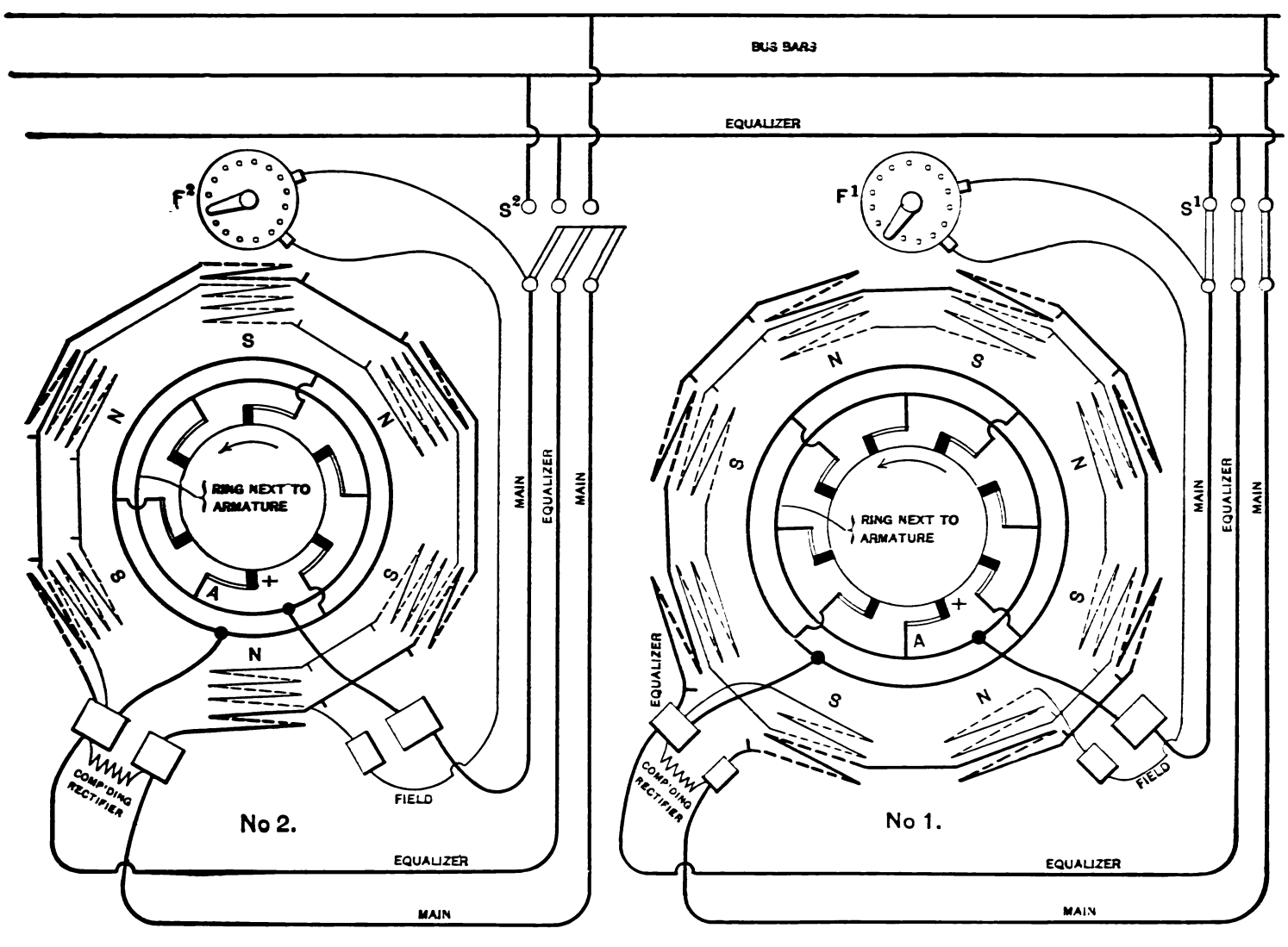

CONNECTIONS TWO COMPOUND-WOUND DIRECT DYNAMOS IN MULTIPLE

Fig. 3694.

COMPOUND DYNAMOS IN MULTIPLE.—The connecting of shunt dynamos in parallel is a very simple matter, since, if the two machines are not of exactly the same voltage when shown in multiple, no harm will be done, because two shunt machines in

parallel tend to steady each other. But the running of compound dynamos in parallel is more difficult, and requires much greater care on account of the effect of the series field coils.

The terminals which are not connected directly to the line, but which are connected to one end of the series coil, should be joined together by an equalizer, which is usually connected to the mid-

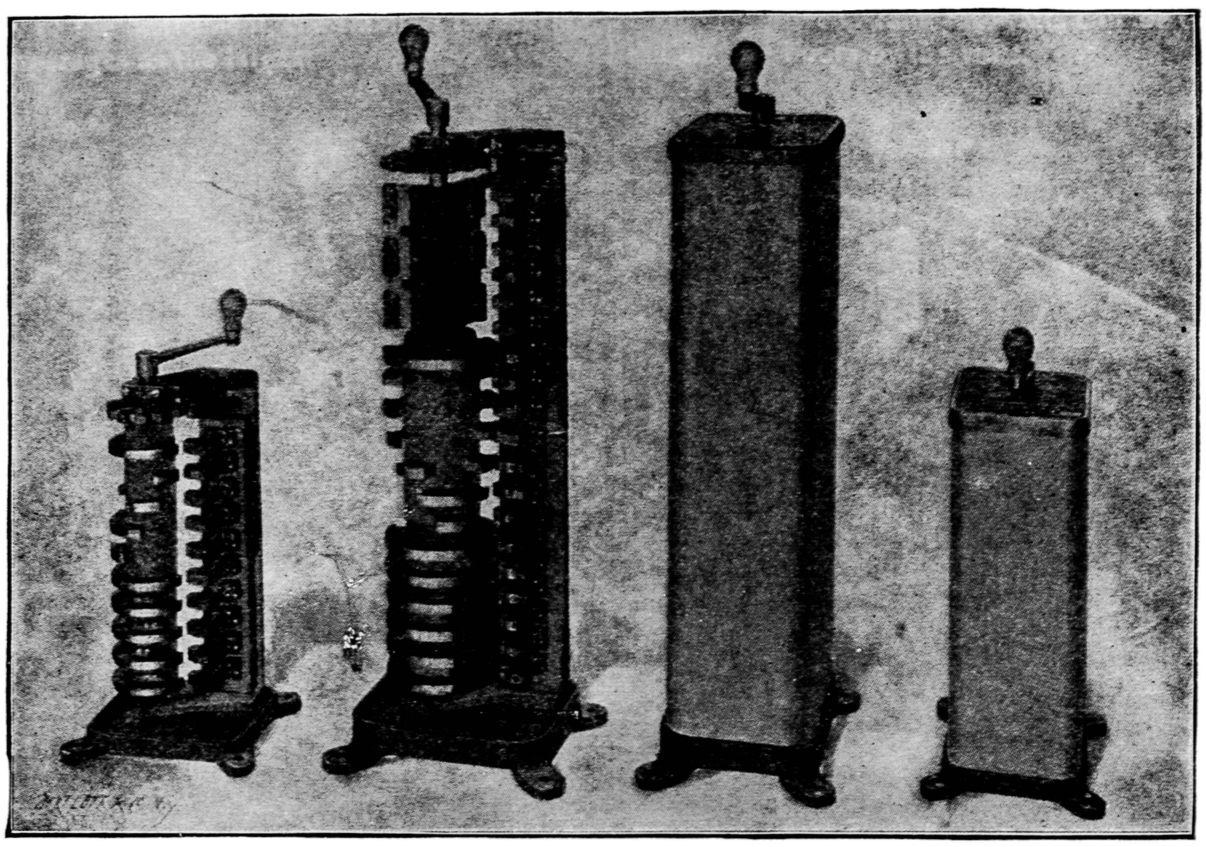

Fig. 3695.

dle contact of a three-pole main switch, the other two poles of which control the connections of the mains. The cross section of this equalizer must be at least one-half that of a main. The details of connecting the two machines in parallel will be better understood by referring to Fig. 3694, which, for simplicity, does not show the switchboard instruments. Let us assume that the

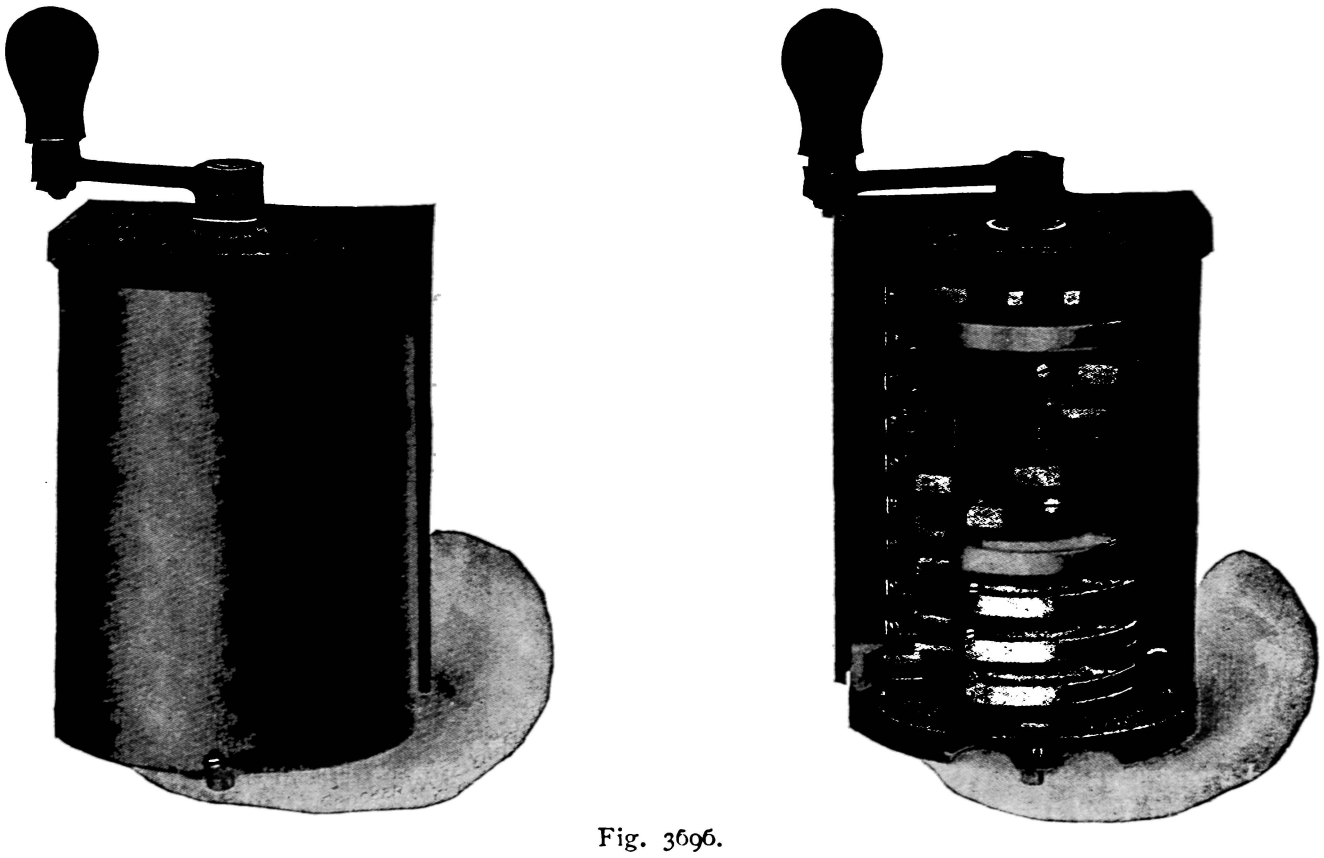

Fig. 3696.

eight-pole dynamo is already running; that switches F^1 in the shunt field circuit and S^1 in the main circuit are closed, and that the machine is generating its full current. To throw in the other dynamo, its armature must be brought up to speed, and switch F^2 closed, to excite its shunt field coil. The voltage of the six-pole machine should then be made about one per cent. higher than that of the circuit, after which it is thrown in by closing the main switch S^2. The machine can then be made to take its proper share of the load by increasing its voltage by cutting out some of the field regulator.

In disconnecting a machine running in multiple with another, the same steps are taken, but in exactly the reverse order; the main switch being opened first, and then the field circuit. The same rules apply to the running of more than two dynamos in parallel.

When two dynamos of different sizes are run in parallel, it is necessary that the resistances of the series field coils shall be inversely proportional to the current capacities of the machines. In other words, if one dynamo carries twice as much current as the other, its series coil should have half the resistance of the other's series coil.

CONTROLLERS.—Figs. 3695 and 3696 represent the controller made by the Crocker-Wheeler Company. Fig. 3698 gives as many speeds backward as forward, operates through a resistance

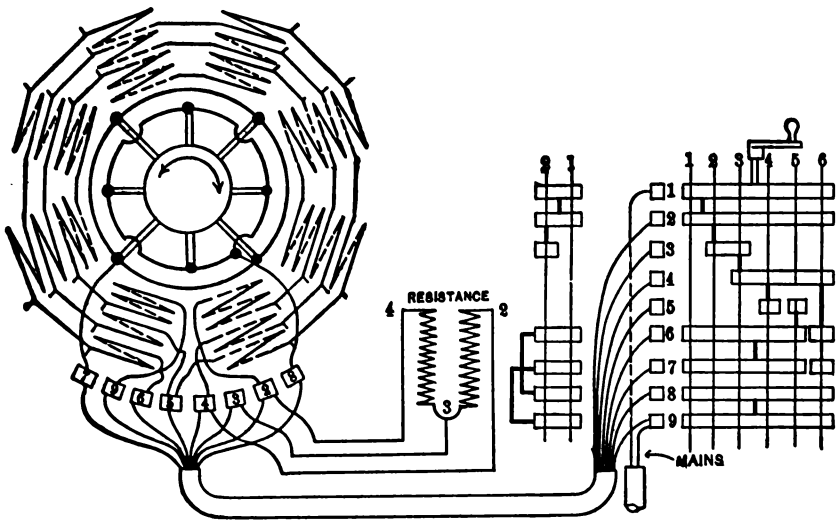

REVERSING COMPOUND-WOUND DIRECT MOTOR WITH COMMUTER.

Fig. 3697.

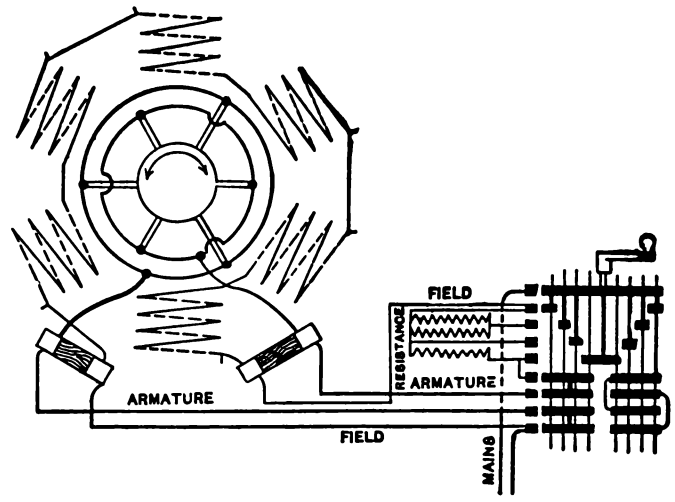

REVERSING SHUNT-WOUND DIRECT MOTOR WITH CYLINDER REVERSER

Fig. 3698.

having one section for each speed, and regulates the speed of the motor by cutting down the voltage supplied by the line in the usual manner.

This cylinder reverser with a small resistance serves as a reversing starter for a plain shunt or for a compound motor, with an unvaried series coil and a shunt coil that is weakened or strengthened by means of a field regulator. This method of controlling the speed of the compound motor by varying the strength of the shuut coil is so well understood that further explanation is unnecessary.

Fig. 3696 is what is called a "commuter" specially designed for use with a compound motor, used principally for printing-press work, but applicable to other work as well. It varies the speed of the motor after it has once started it, by adjusting the field strength by changes in the connections of the various series field coils. In this commuter, by a system of closed circuits through the field windings, parts of which short circuit in proper order, arcs are avoided at all points except those actually engaged in opening the circuit to stop the motor, and these points, in addition to being made as durable and heavy as possible, are renewable when they have finally become too burned to be of service. In order to distribute the duty at stopping, the circuit is broken simultaneously at eight points, so that the arc is minimized and distributed. Fig. 3696 shows the general appearance of 25-ampere commuter, and Fig. 3697 shows diagrammatically the connection, while Figs. 3698, 3699, and 3700 show the connections for the cylinder reverser.

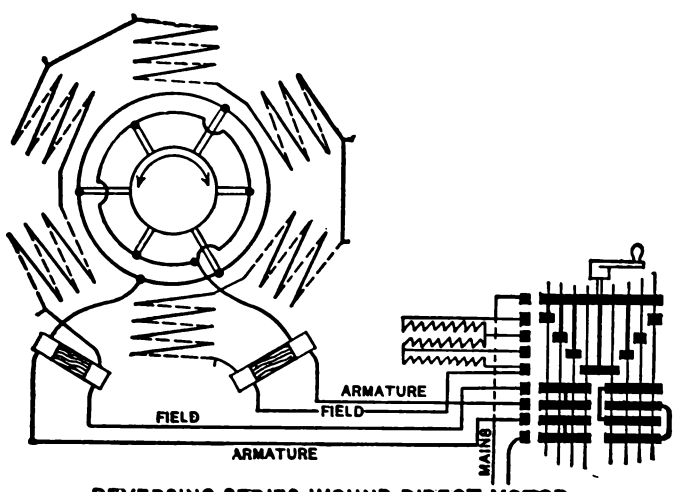

REVERSING SERIES-WOUND DIRECT MOTOR WITH CYLINDER REVERSER

Fig. 3699.

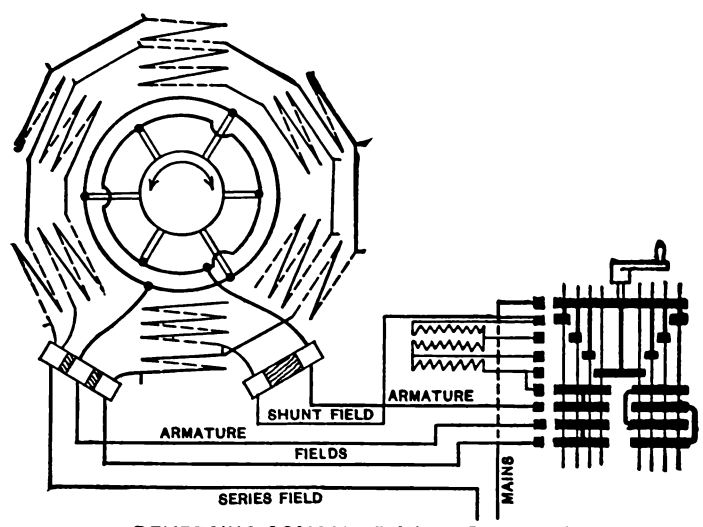

REVERSING COMPOUND-WOUND DIRECT MOTOR WITH CYLINDER REVERSER

Fig. 3700.

Figs. 3701, 3702, and 3703 show the connections of ordinary starters to shunt wound, series wound, and compound wound slow motors respectively. Figs. 3704, 3705, 3706 show the connections of cut-off starters to shunt wound, series wound, and compound wound motors.

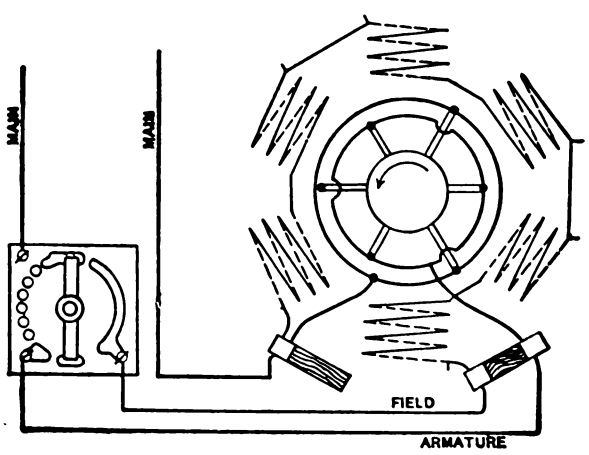

SHUNT-WOUND DIRECT MOTOR WITH ORDINARY STARTER

Fig. 3701.

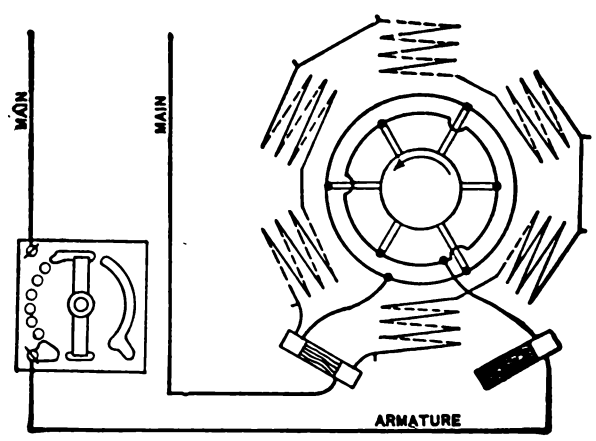

SERIES-WOUND DIRECT MOTOR WITH ORDINARY STARTER

Fig. 3702.

The commuters are made to give six forward speeds and two backward speeds. The first two are obtained by resistance; the remaining by the commutation of the sections of the field.

Four speeds are as many as most conditions require, and we

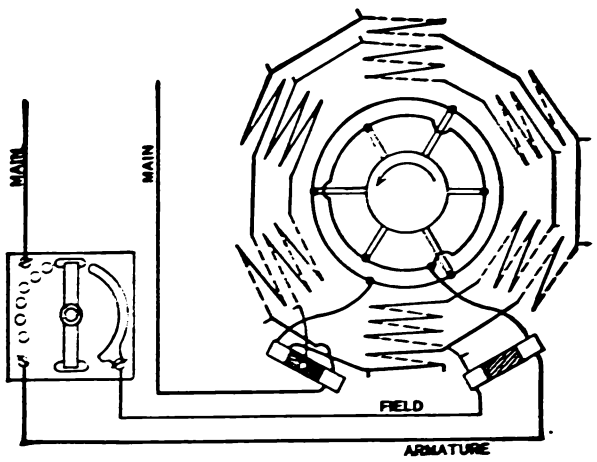

COMPOUND-WOUND DIRECT MOTOR WITH ORDINARY STARTER

Fig. 3703.

give these four without any resistance whatever, and the additional resistance speeds would not be supplied were it not found desirable in starting the larger sizes of motors, and the smaller sizes where these are wound for the higher speeds and outputs. In

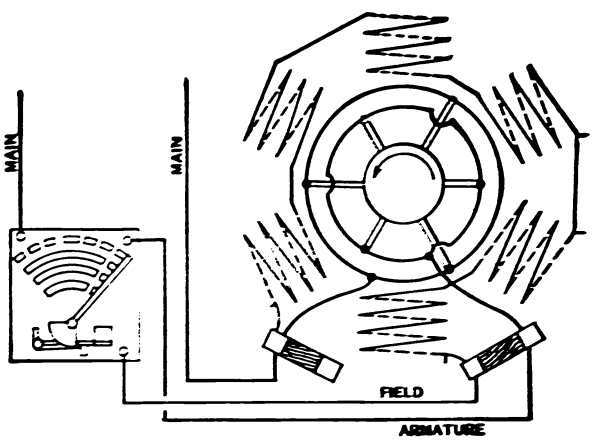

SHUNT-WOUND DIRECT MOTOR WITH CUT-OFF STARTER

Fig. 3704.

the smaller sizes, where only four speeds are needed, we omit the starting resistance entirely.

The circuits through the commuter are made as follows: For the lowest speed, current is admitted directly to the front field, and through the full series field to the armature, after passing

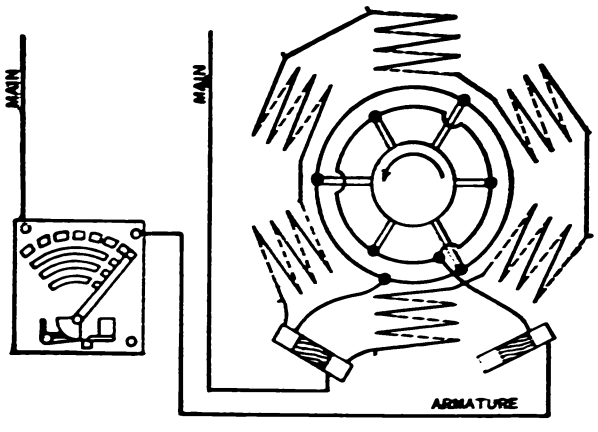

SERIES-WOUND DIRECT MOTOR WITH CUT-OFF STARTER

Fig. 3705.

through the starting resistance. The next speed is obtained by short circuiting half the starting resistance; the next is obtained by short circuiting all the starting resistance, which permits the motor to run at full efficiency from this speed on; the next, by short circuiting the smaller of the two sections into which the series coil is divided; the next, by removing the short circuit from this and applying it to the other section; the next, by applying it to both sections; this connects the armature directly to the line. Thus six speeds are obtained, which may be distributed over the motor's range as desired, by properly proportioning the various coils. Examination of Fig. 3707 will show that the circuit is never opened, and that it is not dependent upon the contact fingers for continuity. If a finger should have an obstruction under it, no arc would form, eventually destroying it with its dynamo contact; but the current will simply fail to be short circuited out of the coil involved, and the motor will run at a lower speed. Between the "off" and the first of the "backward"

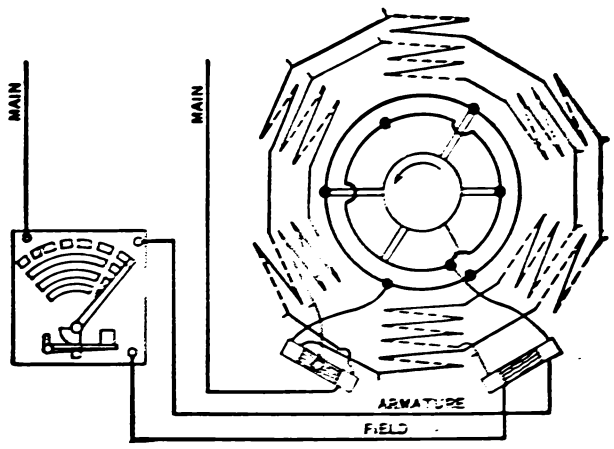

COMPOUND-WOUND DIRECT MOTOR WITH CUT-OFF STARTER

Fig. 3706.

positions of the commuter is a "brake" position. If, when stopping the motor, the handle of the commuter is thrown beyond the off point to this position, the motor's armature is caused to act as a dynamo, short circuited through the starting resistance, and is very quickly brought to rest. A stop on the top of the commuter case prevents the handle being thrown beyond the "off" position or beyond the "brake" position by the operator unintentionally. Fig. 3707 is the diagram of connections.

The mechanical features of the commuter have received careful attention. All the wearing parts are interchangeable, permitting renewals. A footbed wheel, acted upon by a pawl,

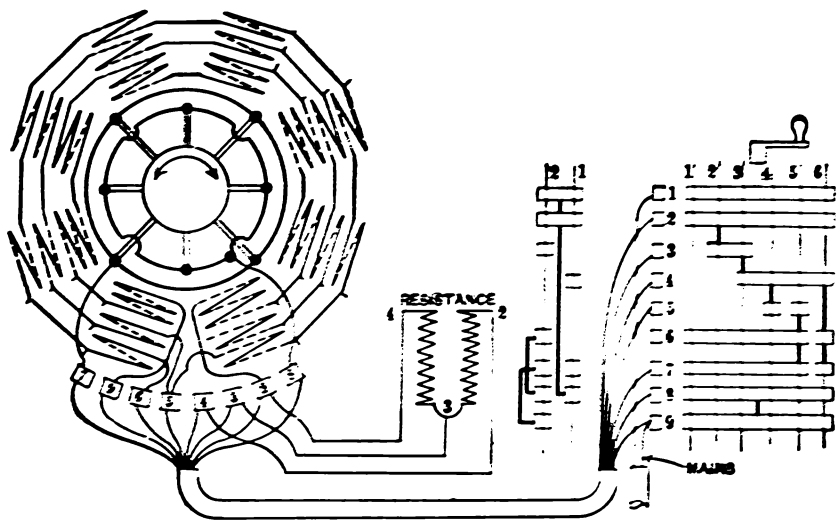

REVERSING COMPOUND-WOUND DIRECT MOTOR WITH COMMUTER HAVING ELECTRIC BRAKE CONNECTIONS

Fig. 3707.

carrying a roller, insures the cylinder's remaining at any point at which it has once been set, and prevents its occupying a position half-way between two speeds. A mechanical stop, movable at will, is also supplied, to limit the motion of the commuter handle to the point corresponding to the speed of usual working where this is not the maximum, so that the quick handling of the crank need involve no uncertainty, or by accident give a higher speed than desired. The undoing of a catch permits the withdrawal of the sheet-iron case, and exposes the working parts and the electrical connections. The commuter may be used in any position and attached to a horizontal or vertical surface.

WESTINGHOUSE DYNAMO.*—Fig. 3708 represents a dynamo made by the Westinghouse Electric Co., of the open coil type, delivering an undirectional though not an absolutely continuous current. The novelty in the design of this generator consists in using a two-phase armature, the current being commuted. The resulting direct current seems happily to adapt itself practically to all forms of series arc lamps in use, as the pulsating effect, while giving a steady mean value to the current, causes a very slight but constant vibration in the mechanism of the lamps, thereby reducing to the minimum the chances of sticking or failure to feed.

The armature is made of high-grade laminated steel, punched with T-shaped teeth at the periphery. The armature coils are wound on forms, thoroughly insulated, and tested independently, afterwards being mounted on the armature teeth, where they are held in place by wooden wedges dove-tailed in. There is no wire on the outside of the armature, so that it may be handled, or even dropped upon the floor, without damage to the winding. In case it becomes necessary to replace a coil, the operation can be performed by any mechanic or dynamo runner in a very short space of time, the damaged coil being removed, and the new one sprung into place in practically the same time that it would take to remove the armature from the field of its machine and replace it by a spare one. It is not, therefore, necessary to carry in stock a spare armature. Fig. 3709 represents an armature partly wound, showing the coils in two halves.

The construction of the commuter, Fig. 3710, is such that the segments have seldom to be removed, but are readily replaceable in a few minutes when necessary.

Figures 3711 and 3712 are outline drawings of Westinghouse arc dynamos.

By reason of the proportions and design of this machine, its current is regulated simply by the reaction between the armature and the field without the introduction of any wall regulating devices whatever. Once adjusted for a given current, the dynamo will maintain this current under considerable fluctuations of speed and wide changes of load, even doing so when overloaded. Should it be desired to reduce the current to any point below its normal amount, this can be done by an adjustment of the field current, and the dynamo will retain the same regulation at the reduced current as at its normal current.

The resulting direct current adapts itself to all forms of series arc lamps in use.

An important feature is the use of independent field excitation. A small direct current machine furnishing a 100-volt current is employed to excite the fields, which are, therefore, peculiarly free from chances of grounds. A circuit interrupting device is shown mounted on a switchboard panel, Fig. 3713. It is connected in the field circuit, and promptly opens the circuit should the main line be broken at any time. This provision, of course, shuts off all current from the line in the event of a breaking of a wire by reason of a storm or fire, and renders it impossible for any one to receive a shock by touching the broken circuit.

SETTING UP MACHINES.—It is important that the location of the machine be wisely chosen, and, whenever possible, the following conditions should govern the choice:

First. The machine should not be exposed to moisture, as from dripping pipes or escaping steam.

Second. It should not be exposed to dirt from coal handling or other causes.

Third. It should be placed in as cool and well ventilated a place as possible. This is important, for, other things being equal, a well-ventilated machine will work harder and deteriorate less than one which is unfavorably located in this respect. The machine should be set on a substantial foundation in order to prevent vibration. Solid masonry is best, but timbers may be used. It is advisable to keep the iron of dynamo frame insulated from the ground, and to this end the bolts securing the machine to its foundation should not come in contact with any other metal or electric conductor. The supports under the machine should be covered with some insulating water-proof paint or compound.

When setting a machine upon its foundation, it should be carefully levelled and the shaft and pulley accurately "lined up" with the driving or driven shaft or pulley.

To erect a machine, first get the lower half of the field into position, then place the armature in its bearings, and after that put on the upper half of the field. In bolting the upper and lower fields of the machine together, all dirt should be brushed off the surfaces so that contact may be as close as possible; otherwise there will be an unnecessary weakening of the magnetism.

The coils are machine wound, and in all machines not larger than 20 H. P. slow speed are held in position by metal plates which are bolted to the yoke. In the larger sizes the plates are bolted to the pole pieces. Field coils should be put into position and

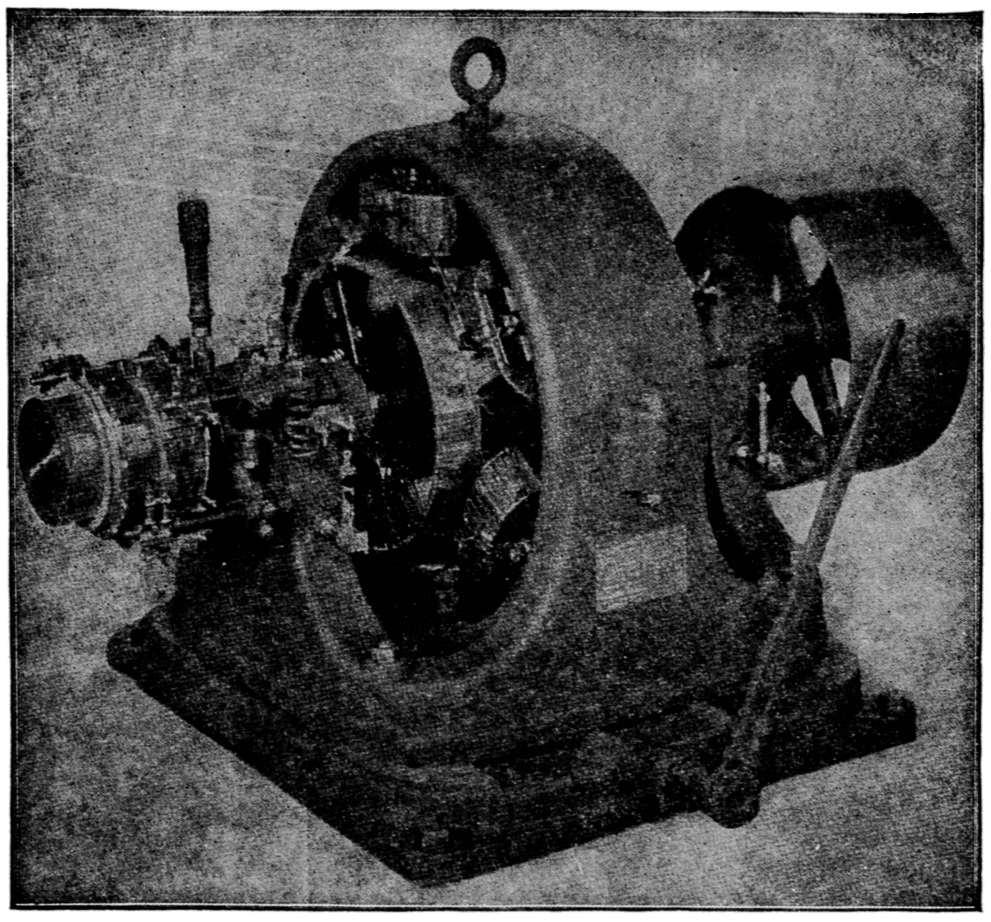

Fig. 3708.

* Furnished by Westinghouse Company.

properly connected before the armature is put in its bearings. Particular care should be taken that the connections between the series coils are made secure and with good contact.

Never try to support any of the weight of an armature by the commutator. Do not allow the commutator to rest on any blocking, and do not pass a rope around it for the purpose of lifting the armature. When handling the armature, always support it by a rope sling about the shaft, and never allow it to rest on its body. Be very careful not to mar or scratch the shaft, as any roughness would cause it to cut the bearing and produce heating when running.

In putting the armature in the field, be careful not to scratch the bearings, or bend or break the oil rings.

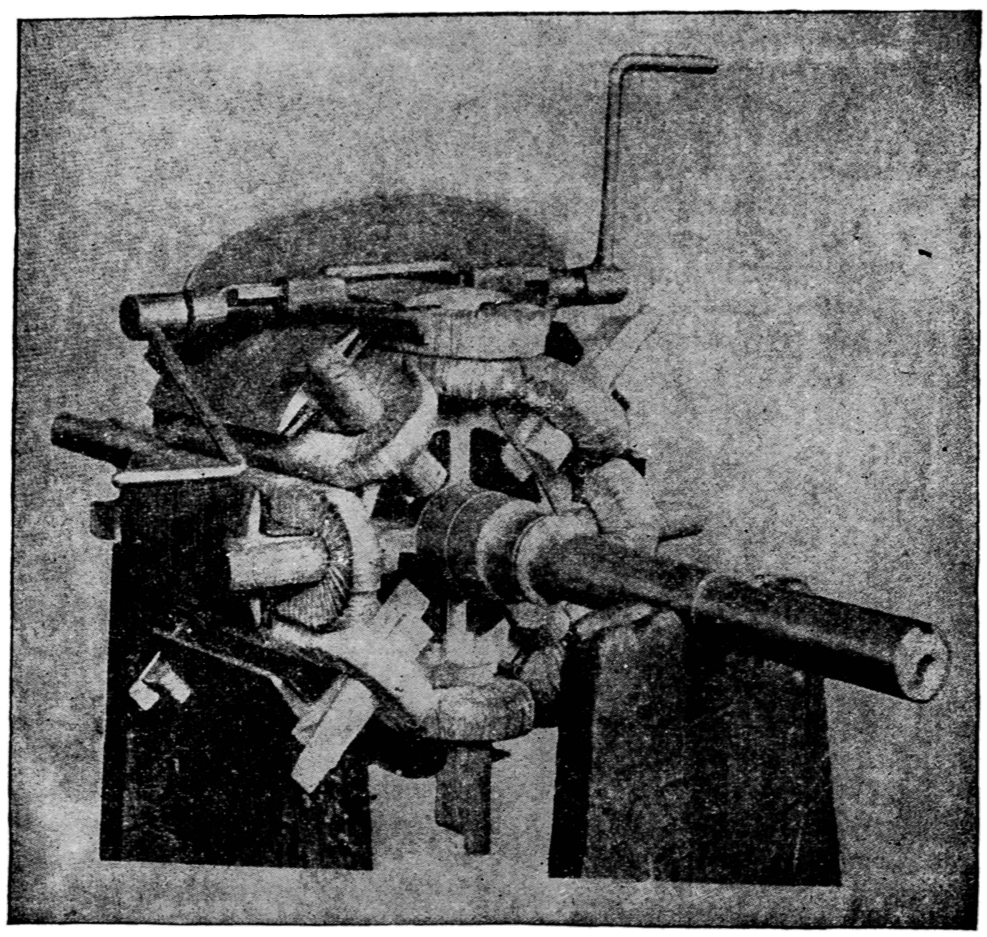

Fig. 3709.

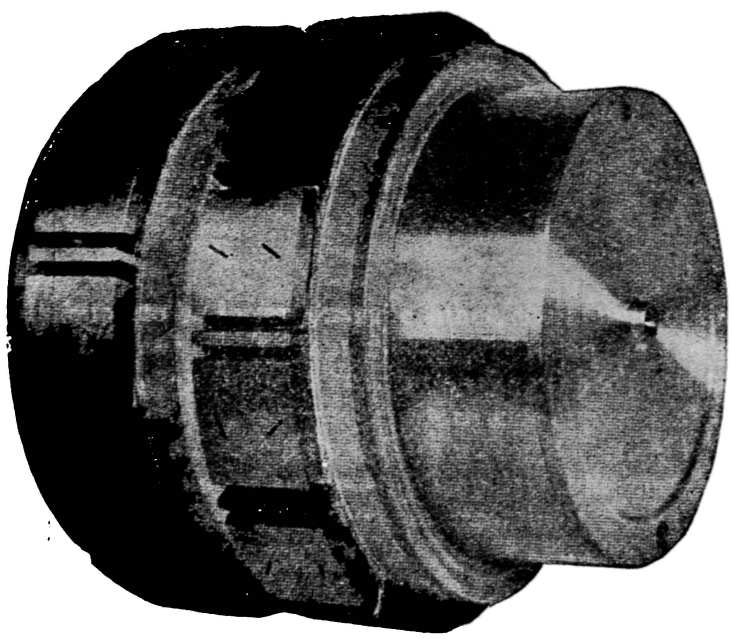

Fig. 3710.

The commuter may be removed by taking off the plate at the end of the shaft, releasing the connections then disclosed, and loosening the keyway set-screws. The surface of the commutator should be kept smooth by the occasional use of sandpaper, which can best be applied by attaching it to a hard wooden block curved to a radius slightly larger than that of the commutator. There will then be less danger of wearing flat places in it, which would cause jumping of the brushes. *Keep it lubricated* by using a *small* quantity of cylinder oil applied with a piece of light canvas (never use waste). See that there is no looseness of any of its parts. If it should become untrue, it should be removed and turned down in a lathe.

When the segments are worn out, they can readily be removed. An inspection will show that the copper segments are screwed to the spider, being so shaped that they hold the insulating segments in place. If a new insulating segment should not fit tightly, a piece of mica should be slipped in.

The brushes should be set according to Fig. 3714, and care should be taken that each pair of brushes does not cover more than the surface of one metal segment. The brushes should fit the surface of the commutator. They should occasionally be refitted, reshaped, and accurately reset. The brushes should rest upon the commuter with light but good contact (about 16 ounces pressure). Heavy pressure of brushes should be avoided, since it usually causes cutting.

A front brush may be taken off and replaced at any time during run. In replacing a back brush, draw the front brush back even with the back and then remove the back brush ; replace back brush as quickly as possible and then slide front brush ahead, to its former position.

The length of the spark to be carried during a run may vary from $\frac{1}{4}$ to $\frac{1}{2}$ inch, according to the load on the dynamo. A position of the rocker-arm can always be found where this length of spark can be secured. Undue sparking may be caused if the brushes are burned on their ends.

Flashing may be due to the following causes :

a. Wrong setting of the brushes.
b. Poor tension of the brushes.
c. Brushes jumping from the commuter.
d. A dirty or rough commuter.
e. Ground on armature or field.
f. Overloading.
g. Slipping of the belt.
h. Temporary open circuit. This last may be caused by a bad lamp.

The belts should be tight enough to run without slipping, but the tension should not be too great, as the bearings will heat. Belts should be run *with*, not against, the lapping. The joints

should be dressed smoothly so that there will be no jarring of the machine as they pass over the pulley. The crown of the driving and driven pulleys should be alike. The "wabbling" of belts is sometimes caused by pulleys having unlike crowns. A wave motion, or flapping, is usually caused by slipping between certain portions of the belt and the pulley, resulting from grease spots, etc. The fault may sometimes be corrected by tightening the belt, but a better remedy is to clean the belt. A back and forth motion of the belt on the pulley is caused by unequal stretching of the edges of the belt. If the shafts are parallel, but the pulleys not directly opposite, the belt will tend to run more to one or the other side of the larger pulley. If the pulleys are opposite and the shafts not parallel, the belt will run to the side of the smaller pulley. In lining up the pulleys, the shafts should be parallel, and the pulleys themselves should be directly opposite each other. Before fastening a machine to its foundation, line up the driving and driven pulleys as carefully as possible, pull the belt on and run slowly. Any error in lining up can then be corrected. Belts must be quite dry. When belt dressing is used, it should be applied sparingly.

The bearings, which are self-oiling, should be filled to such a height that the oil rings will carry sufficient oil up on the shaft. If the bearings are too full, oil will be thrown out along the shaft. Oil in the bearing should be renewed occasionally. The best quality of oil should be used, and new oil should be strained to clear it of dirt, etc.

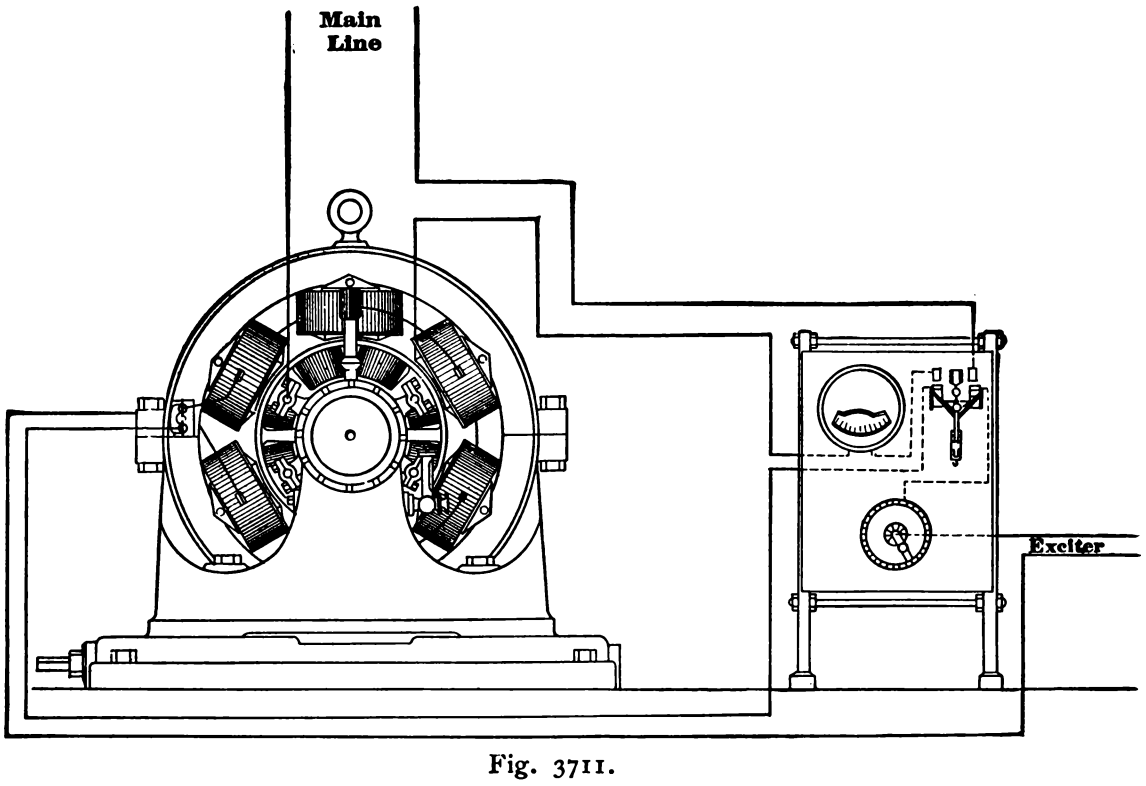

Fig. 3711.

Outline Drawings (Figs. 3711 and 3712) for D.C.C.C.Arc Dynamos.

Machine	Amp.	Volts	Lamps	Exciter		A	B	C	D	E	F	G	H	I	K	L	M	N	O	P	Keyway in Shaft		Pulley			Revolutions per minute
				Volts	Amp.																Wide	Deep	Dia.	Face	Len'h of Hub	
00	9.5	2000	40	120	5.5	$60\frac{1}{2}$	$31\frac{1}{8}$	$29\frac{3}{8}$	$35\frac{1}{2}$	$2\frac{3}{8}$	$21\frac{1}{8}$	$37\frac{1}{8}$	16	$20\frac{3}{8}$	$40\frac{3}{8}$	20	$33\frac{1}{2}$	$41\frac{1}{8}$	$45\frac{1}{2}$	$6\frac{17}{32}$	$\frac{5}{8}$	$\frac{1}{4}$	19	10	6	900
00	6.8	2500	50	"	4.8	"	"	"	"	"	"	"	"	"	"	"	"	"	"	"	"	"	"	"	"	"
0	9.5	3000	60	"	7.3	$66\frac{3}{4}$	34	$32\frac{3}{4}$	$38\frac{7}{8}$	$2\frac{3}{8}$	20	$41\frac{1}{8}$	$19\frac{1}{2}$	22	$46\frac{7}{8}$	$24\frac{7}{8}$	$37\frac{1}{8}$	$45\frac{5}{8}$	$50\frac{1}{4}$	$7\frac{5}{8}$	$\frac{5}{8}$	$\frac{1}{4}$	21	14	7	825
0	6.8	3750	75	"	6.7	"	"	"	"	"	"	"	"	"	"	"	"	"	"	"	"	"	"	"	"	"
1	9.5	3750	75	"	8	74	$38\frac{5}{8}$	$35\frac{3}{8}$	43	$2\frac{7}{8}$	$22\frac{5}{8}$	$45\frac{3}{4}$	$21\frac{1}{4}$	$25\frac{3}{4}$	$52\frac{1}{2}$	$26\frac{3}{4}$	43	$51\frac{3}{4}$	$56\frac{3}{4}$	10	$\frac{3}{4}$	$\frac{5}{16}$	27	16	9	650

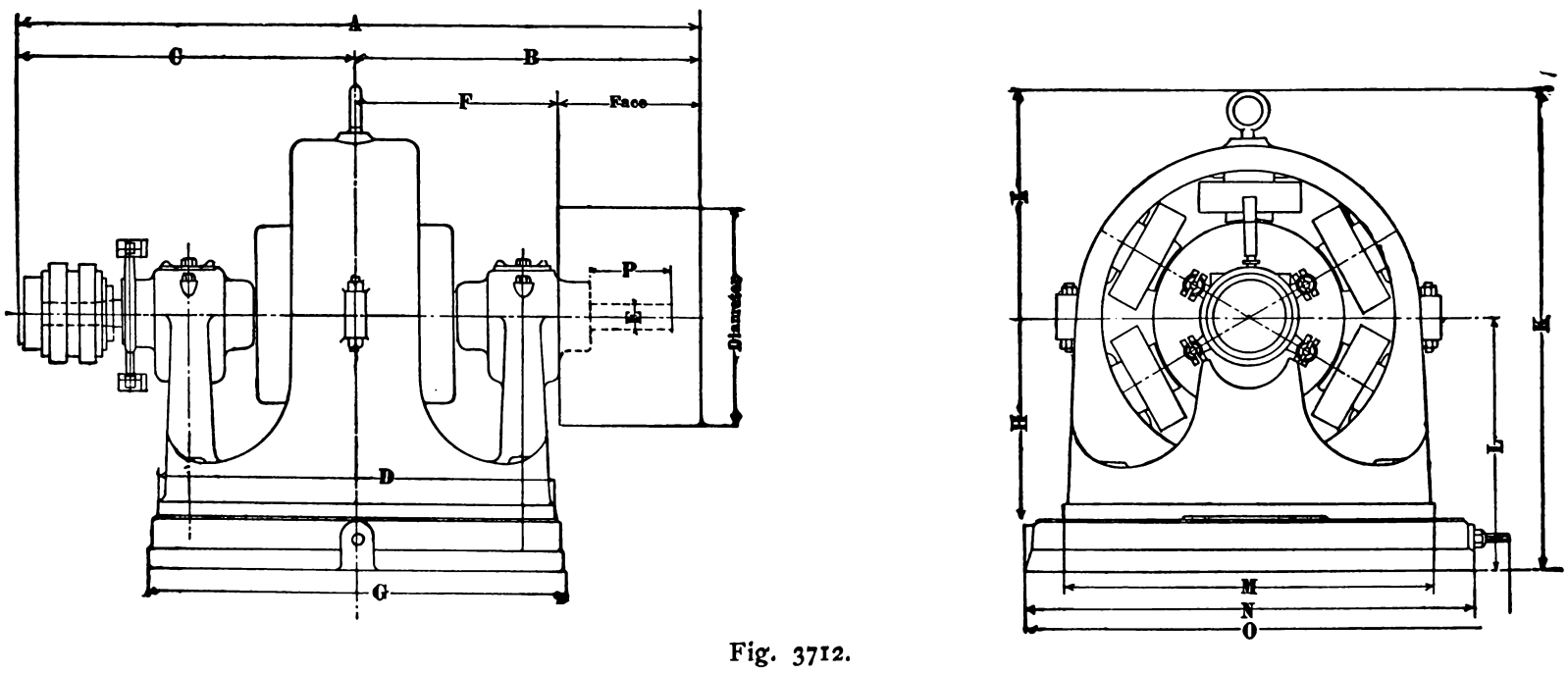

Fig. 3712.

A warm bearing or "hot box" is probably due to one of the following causes:

a. Excessive belt tension.

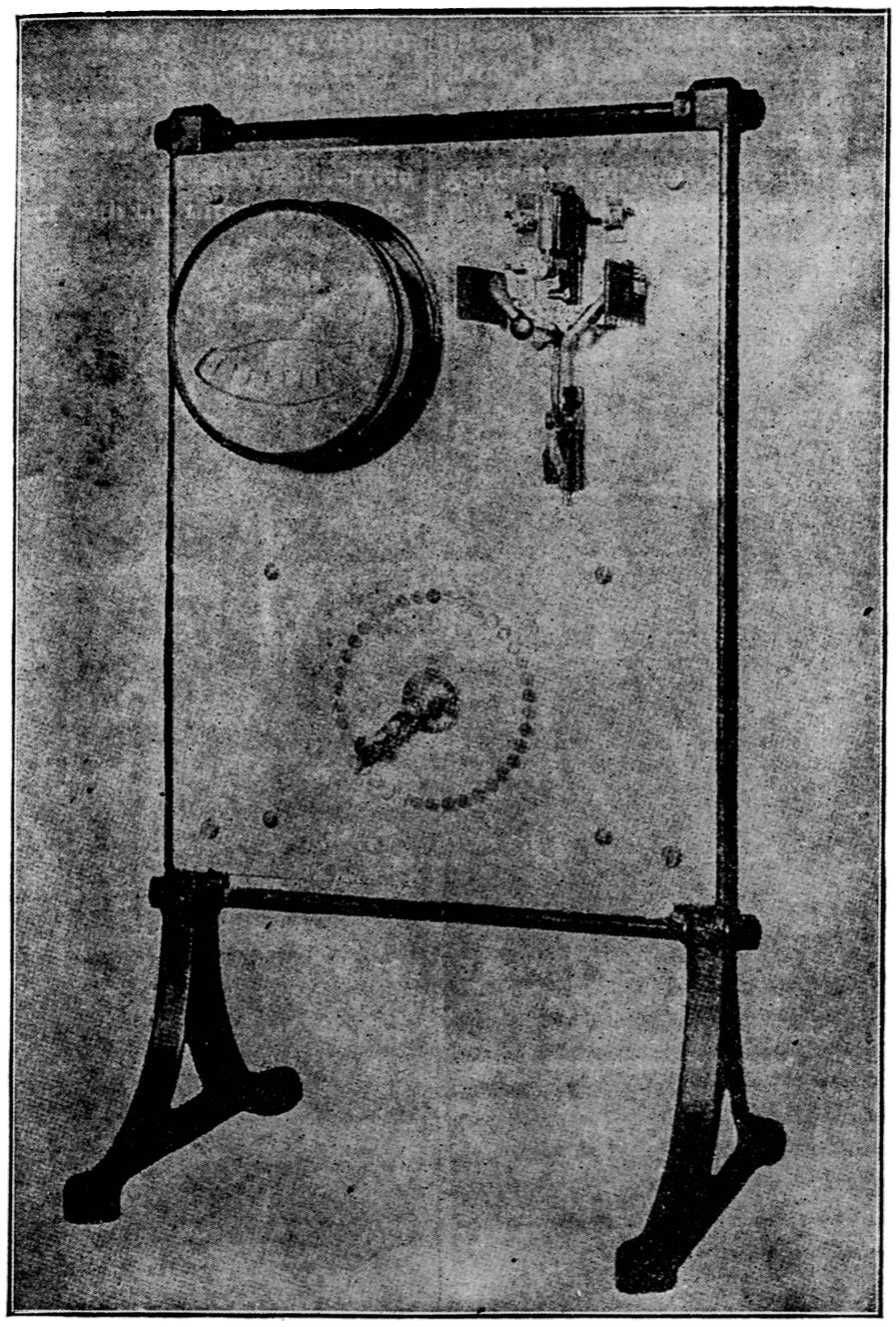

Fig. 3713.

b. Failure of rings to revolve with the shaft.
c. Rough bearing surfaces.
d. Improper fitting in place of the journal boxes.

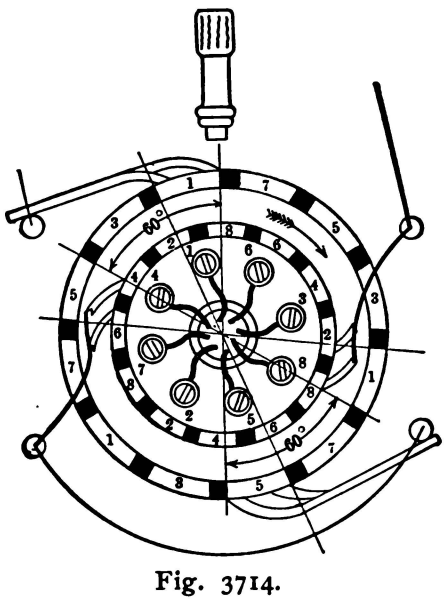

Fig. 3714.

e. Bent shaft.
f. Use of poor grade of oil.
g. End thrust due to improper levelling.

In case of "hot boxes," first feed heavy oil copiously, then slacken belt; if relief is not thus afforded, shut down, keeping the armature slowly revolving until the shaft is cooled.

Should the armature and fields have been exposed to dampness or low temperatures, great care should be taken in starting up. In order to dry out a new armature, it should be run on a "short circuit," with full current of machine, for several hours. Too much attention cannot be given to this matter; for, although a machine may run well when damp, such usage is apt to result in a permanent weakening of the insulation. When starting a new machine, it is well to run it for some time at slow speed in order to see how the belt and oil rings operate. When the machine is running with a load, never run it below its rated speed.

Should a defect appear in the insulation on the armature, or the outside of a field coil, it can often be repaired by raising the injured wires and insulating them afresh.

To start an arc machine:

First. Set the brushes according to Fig. 3714, always being careful that each pair of brushes just covers the space of one metal segment.

Second. See that the oil gauges show a sufficient amount of oil in the bearings.

Third. Ring out circuits for open lines and grounds.

Fourth. Start slowly; see that the oil rings are revolving freely.

Fifth. Get machine up to rated speed, and after lubricating the commutator with some cylinder oil applied with a canvas cloth, put down brushes.

Sixth. Try circuit breaker on switchboard to see whether you get a spark. If you do, put in circuit breaker and adjust rocker

arm so that you get about ⅛-inch spark. Then adjust the rheostat on the switchboard until you have the required number of amperes.

Seventh. Be sure that the polarity of the circuits is all right, so that the lamps will not burn upside down.

Never put in the circuit breaker unless all of the brushes are down on the commutator.

As the load comes on and everything heats up to its running temperature, it will be found necessary to move the rocker arm slightly in the opposite direction to that of the rotation of the armature, in order to keep the spark at from ¼ to ⅛ inch. Also, as the load is cut off, it will be necessary to move the rocker arm slightly with the rotation of the armature.

The point of commutation changes about one inch from full load to no load.

Shutting down is accomplished in the following order:

First. Throw off load by opening circuit breaker, then disconnect all lines and remove all plugs.

Second. Raise brushes and polish commuter if necessary.

which the other end of that same series coil is connected, shoula be exactly the same for every generator, when each is carrying its proper share of the load.

To make this drop the same for each generator, it will be necessary to put resistance in circuit with the series coils of the machines whose drop is least.

The equalizing wires must have as little resistance as is practicable, and never more than the dynamo leads.

In the case of large machines, it takes several hours for the field coils to reach a constant temperature. As the fields heat up it becomes necessary to throw resistance *out* of the shunt circuit.

Trouble is sometimes experienced in getting the load to divide up properly between two or more generators, because no attention has been given to this matter of adjustment, which should be undertaken only by expert electricians, who will find no difficulty in running our generators in multiple with machines of any make, and, with the majority of them, perfectly.

In starting, if there is one generator, furnishing current to the line, and it is desired to throw in a second one on the same circuit:

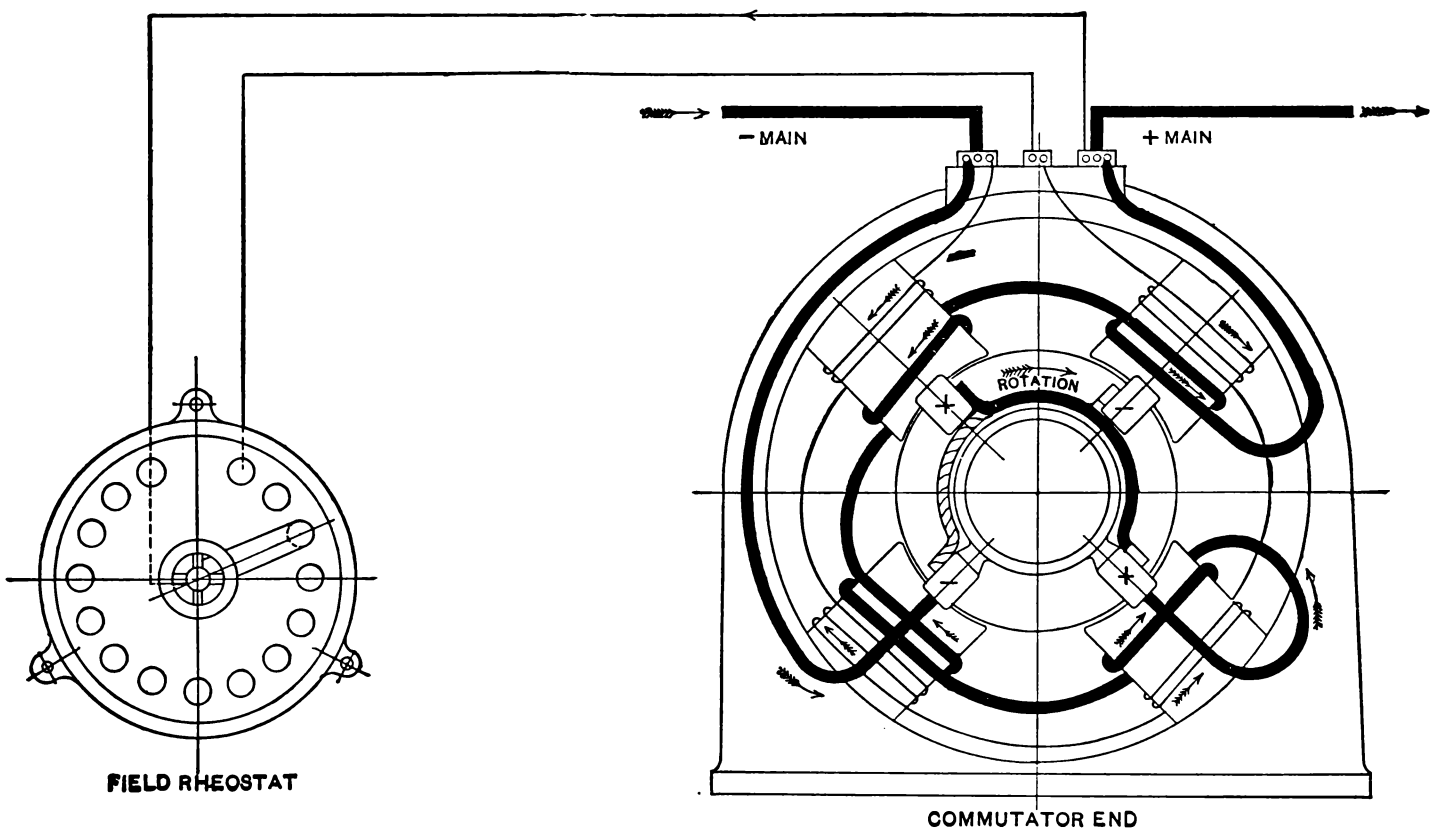

COMPOUND WOUND GENERATOR, 4 POLES, 20 H.P. STANDARD SPEED AND BELOW.

Fig. 3715.

Third. Shut down, and clean out air spaces of commuter by doubling a piece of sandpaper and running through slots.

Fourth. Clean commuter and see that brushes are in proper position and in good condition.

Fifth. Wipe off all oil and dirt, and blow out the armature with a bellows.

OPERATING GENERATORS IN MULTIPLE.—To run compound generators in multiple it is necessary, in order to have each one do work proportional to its capacity, to connect them together in three places—at the regular teminals of the machines and at the beginning of the series windings. The connection from the beginning of the series winding is called the equalizing wire, and runs to the equalizing bar on the switchboard. On the switchboard the middle one of the three bars is usually the equalizing bar. If the generators are of the same size and make, the only point requiring special attention is that the wires which run from the different machines to the equalizing bar must be of the same size and length, that is, of the same resistance, and also those wires which connect the terminals of the series coils with their bar on the switchboard must have equal resistance.

If the generators differ in design or size, the matter becomes more complicated. In this case, *the difference of potential or drop in voltage between that end of the series coil which is connected directly to one of the brushes, and the bus bar, to*

First. Get the second one up to full speed.

Second. Adjust voltage of the second as near that of the first as possible.

Third. Throw in the second generator's three-jaw switch.

Fourth. Notice the ammeters to see that the loads are rightly proportioned. If the first generator is doing more than its share of work, throw resistance *in* with its regulator, or *out* with the second's regulator. If the second is doing too much work, throw the regulator in the opposite direction.

If you want to throw in a third, fourth, or fifth machine, follow the same rule.

If a generator is thrown in multiple with another one before its voltage is up to the same point, it will not do its share of the work and may even run as a motor with current from the other machine. In this case, throw resistance *out* with the regulator of machine which has just been thrown on the circuit.

When two machines are working together, if the belt on one of them should break, or slip off, this generator will continue to run, being driven by the other one.

If it is found that the machines do not operate together satisfactorily, note the positions of the brushes. If one machine carries too much of the load, move the brushes slightly forward; if too little, backward, without causing them to begin sparking.

In stopping, throw resistance *in* with the regulator of the

generator to be cut out until its load is very small, as shown by ammeter; then open circuit breaker and three-jaw switch belonging to this generator.

Stop engine or loosen friction clutch.

Be very careful that the shunt circuit of a generator is not opened or broken while it is working in multiple with another one. In case this should happen, the armature or series coils of one or both machines would be burnt out, unless they were almost instantly cut apart by the melting of the fuses or opening of a circuit breaker.

If it becomes necessary to raise or lower the voltage on the *line*, raise or lower the voltage of *all* machines which are supplying the current.

Starting shunt motors should be done in the following manner: First see that the oil gauges show that there is sufficient oil in the bearings and that the brushes bear on the commuter at a point opposite the centre of the pole pieces; then if there is a circuit breaker, close it, also the main switch. Care should be taken not to open the field circuit, even while the motor is not running, as there is danger of breaking down the insulation of the field if the current is suddenly broken. Should it become necessary to break the field circuit, it should be done very slowly, allowing the arc thus formed to die out gradually; then rotate the handle of the automatic starting and stopping rheostat slowly, as far as it will go, and hold it in this position until the magnet becomes sufficiently strong to hold the lever. (When it is desirable to run the motor at variable speeds, a special resistance box will be required). After this, move the brushes slowly backward till sparking ceases; give them maximum backward lead for no load, then set the rocker-arm once for all, by securing it in this position. Occasionally feel all bearings, joints, and contacts, and if they are unduly warm, there is a defect which should be remedied immediately.

To stop these machines, open the circuit breaker or switch, which will cut in the resistance of the automatic starting and stopping rheostat. Never attempt to stop a motor by forcibly pulling open the automatic box; disregarding this may cause burning out of the field coils. After the machine has been stopped, it should be thoroughly cleaned and put in order for the next start.

The speed for operating series and compound motors is generally regulated by the use of a commuter type controller. This controller consists of a box of resistance material by means of which a voltage of varying intensity is applied to the motor armature, thus varying speeds, and corresponding outputs are obtained.

The machines must be kept dry, as water dripping on the armature will cause trouble. At all times keep the machines clean and free from oil and dirt. Carbon dust must be cleaned off frequently, as it is detrimental to the durability of the machine. Be especially careful to see that no oil or dirt collects about the brush holder or commutator. Do not let oil run out of the bearings down on the field winding, as then it collects dirt and will sooner or later result in grounding the winding. All switches should be left open when a machine is not running. Keep all small pieces of iron, such as bolts and tools, away from the machine, as they may fall on the commutator or armature and do damage. If an automatic circuit breaker is used, it should be adjusted to break a number of amperes, say 50 per cent., greater than the rated capacity of the machine. If a fuse blows, or if the circuit breaker acts, first open switch on corresponding line, close the breaker, try it, and close again, or replace fuse and afterwards close the switch, and, if a motor, start as usual. If the breaker or fuse immediately opens the circuit again, there is something wrong—either a short circuit or overload. As a rule, never break the shunt current of a machine, for the inductive discharge from the fine field winding would seriously strain the insulation, perhaps destroy it. In case a short circuit should occur at or near the generator, or if an arc should be formed at a switch or fuse block and hold on, throw all resistance in with field rheostat, and, if necessary, shut down engine at once. Should it be necessary to remove a brush while the generator is running, do so very carefully, taking care that the other brushes in the same holder are making contact with the commuter. If the bearings become hot, feed heavy lubricant freely and slacken the belt. If this does not afford relief, shut down, keeping the armature revolving slowly until cool; this will prevent sticking.

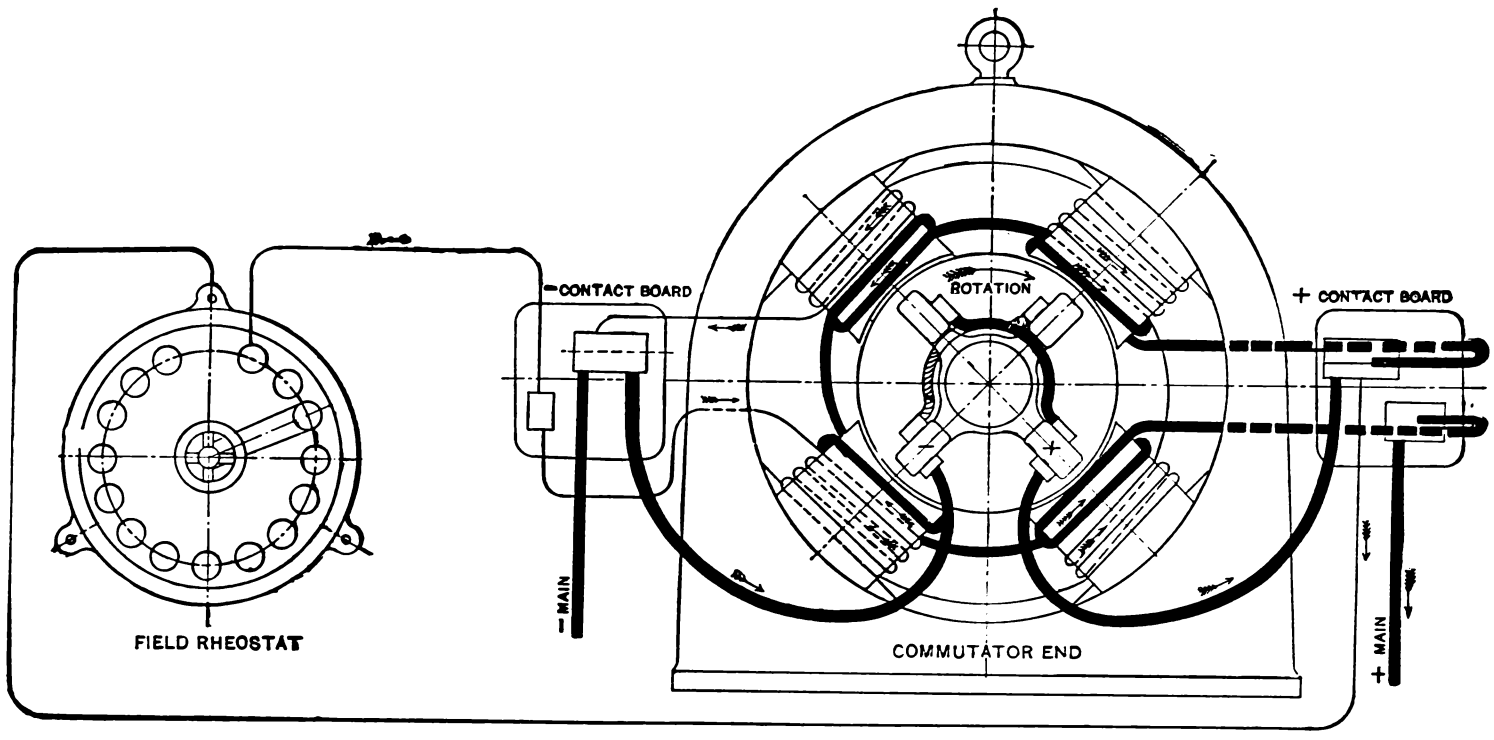

COMPOUND WOUND GENERATOR, 4 POLES, 20 H. P. SLOW SPEED AND ABOVE.

Fig. 3716.

The commuter is an important part of the machine and requires careful attention. Its surface should be kept smooth. Ordinarily it will only require to be wiped off with a piece of canvas; but should it become too rough, rub down with oo sandpaper. The lubrication of the machine is important. Apply lubrication with cloth, not waste. Should the commuter get out of true, turn it down either while the armature is in its bearings or by putting the armature in the lathe. Flats or flat spots on commuters are usually caused by excessive wear, by too much end play or a loose commuter, and by bad belt splicing. A bad short circuit will sometimes produce a flash which will start a "flat."

Commuters sometimes, after long usage, get hot while carrying only the regular load of the machine. This usually indicates that they are worn down as far as it is safe to go, and the commutator should be replaced by a new one.

Multipolar machines are provided with carbon brushes the ends of which should be fitted to the commutator. This can be done by putting them in position in the brush holder and running

a piece of No. 3 emery cloth (rough surface out) back and forth around the commutator and under the brushes.

The edge of copper-plated brushes should be slightly bevelled, so that the copper does not come in contact with the commutator.

Grounds may occur on the feeders or supply circuit wires, or on the armature of the machine itself. In order to determine in what part of the system the ground is located, proceed as follows:

Connect in series, one, two, or five 100-volt incandescent lamps, depending on the voltage of the machine. Touch one of the resulting terminals to a good ground and the other first to the positive and then to the negative brush. If the lamp or lamps light, there is a ground on the feeders. Repeating the same operation, only touching the terminal to the iron framework of the machine instead of to the ground, grounding of the armature or field conductors is determined. A ground on the machine is a rare occurrence.

Sparking at the brushes may be due to any of the following causes:

a. Brushes may not be set exactly at the point of commutation. A position can always be found where there is no appreciable sparking; at this point the brushes should be set and secured.

b. Brushes may be wedged in the holder.

c. Brushes may not be fitted to the circumference of the commutator.

d. Brushes may not have sufficient pressure on commutator.

e. Brushes may be burned on their ends.

f. Commutator may be rough; if so, smooth off. The commutator should run smooth and true, with a dark, glossy surface.

g. A commutator bar may be loose or projecting beyond the others.

h. The commutator may be dirty, oily, or worn out.

i. Machine may be overloaded.

These are the most common causes of sparking; but it may also be due to an open circuit or loose connection in the armature, which will cause a bright spark which will appear to run completely around the commutator. It may be recognized by a scarring of the commutator at the point of open circuit.

These generators are designed so that the series winding is connected to the positive brush.

If the machine has four brush-holder arms and the direction of rotation is clockwise when viewed from the commutator end, the top brush to the left and the bottom one to the right will be positive, and should be connected together and to the series coil, as in Figs. 3715 and 3716. If, however, rotation is in the opposite direction, the other brush will be positive, and the connections to the brushes must be reversed.

Fig. 3717 represents the connections for a six-pole generator.

Any doubt as to the polarity of the brushes may be determined by the use of a Weston volt meter. When the polarity of the various parts of a generator have once been determined, they should be marked.

When changing direction of rotation of a four-pole generator or motor, change the connections by connecting the wire which was on the positive brush to what was the negative brush, and the wire which was on the negative brush to what was the positive brush. When changing the direction of rotation of a six-pole generator, follow directions given in Fig. 3717. If the carbon brushes are radial to the commutator, the holders do not ordinarily need to be reversed for change in direction of rotation. But in case the carbons are at an angle to the radius of the commutator, the carbon holders should be reversed.

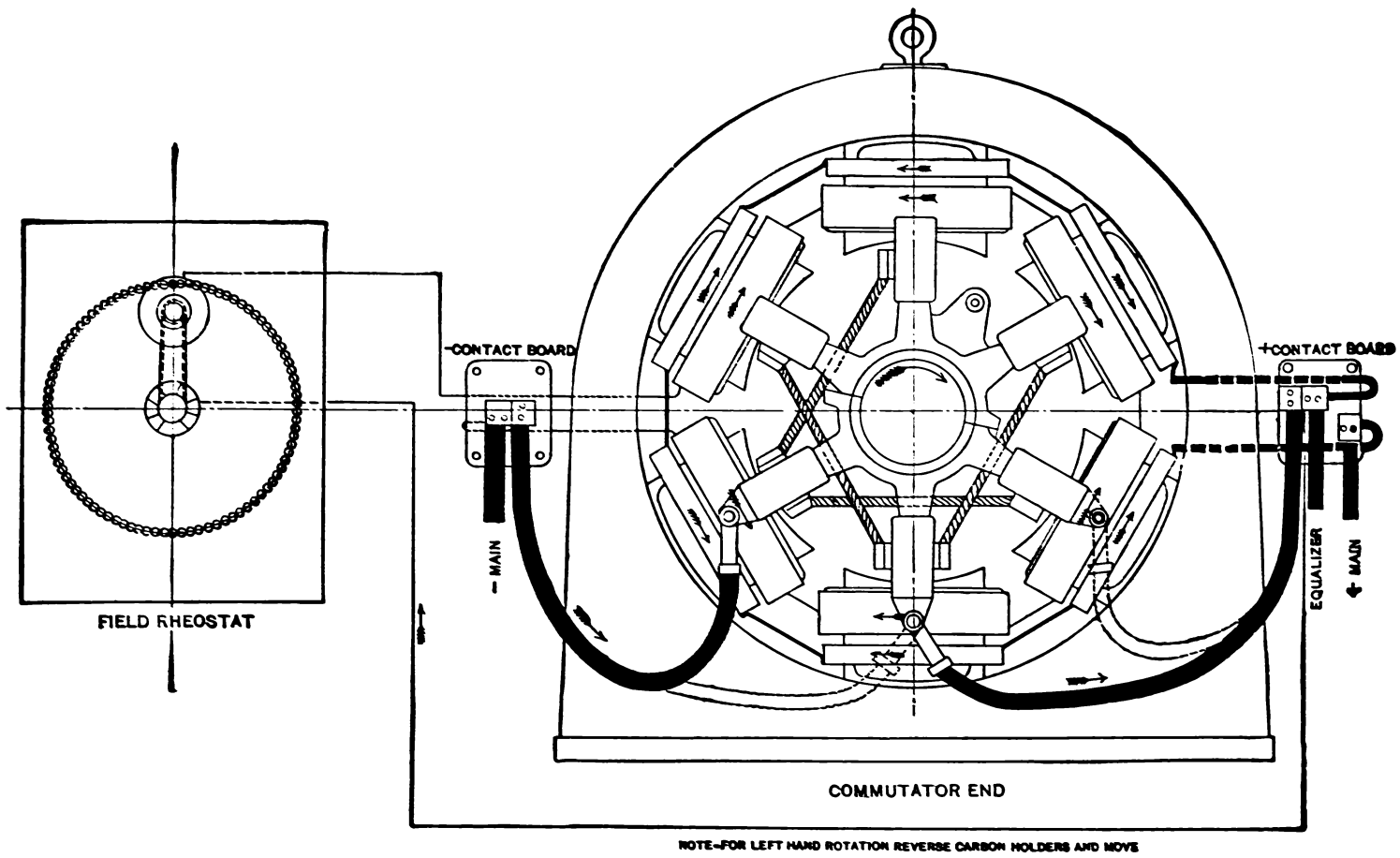

NOTE—FOR LEFT HAND ROTATION REVERSE CARBON HOLDERS AND MOVE ROCKER ARM UNTIL TERMINALS ARE IN DOTTED POSITION.

COMPOUND WOUND GENERATOR, 6 POLES, 100 TO 250 K.W. INCLUSIVE.

Fig. 3717.

A motor may fail to have its field magnets excited, or a generator may fail to "excite" itself; that is, to generate enough current to charge its own field magnets. This may occur even when the generator was all right the day before. The reason will generally be found to be a loose connection, break in the field circuit, or possibly poor contact at the brushes, due to a dirty commutator. An open circuit in the field winding can sometimes be traced with a magneto bell, but this is not an infallible test, as all magnetos will not ring through a shunt winding, even though it be perfect. The trouble may be in the starting box or rheostat. Examine all connections and look for a broken or burned resistance coil. If no open circuit is found here, or in the field, the trouble is probably in the armature. If nothing is wrong with the connections or windings, it may be necessary to excite the fields of the generator from another machine. Calling the generator which will not excite No. 1, and the other generator from which we are to draw current No. 2, then, to excite the fields of generator No. 1: *Open all switches and remove brushes of No. 1.* Connect positive brush holder of No. 1 with the same brush holder of No. 2; also connect negative brush holders

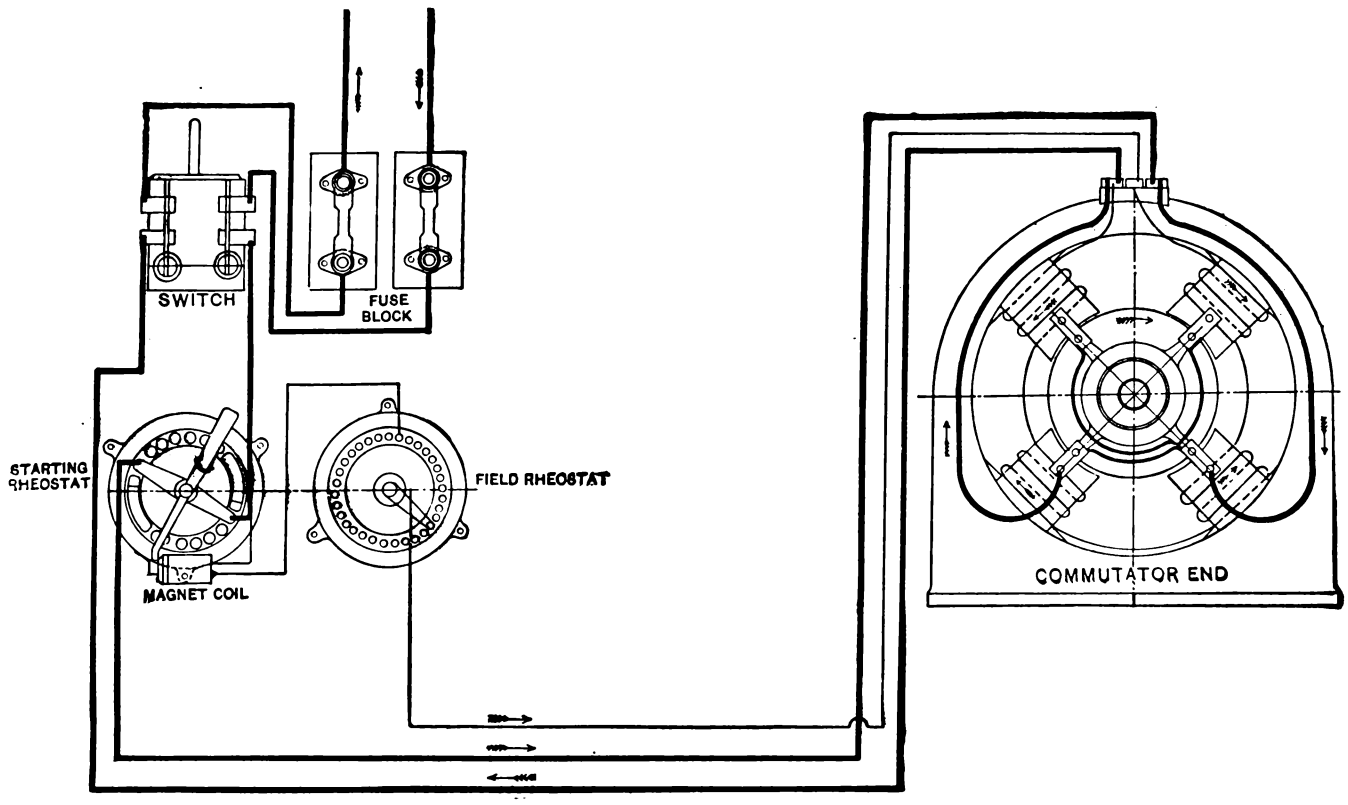

SHUNT WOUND MOTOR

Fig. 3718.

together (it is well to have about a 5-ampere fuse in circuit), then turn on the current. If the shunt winding of No. 1 is all right, its field will show considerable magnetism. If possible, reduce the voltage of No. 2 before breaking connections. If this cannot be done, throw all resistance in with regulator of No. 1 and then break connection *very slowly*, lengthening out the arc which will be formed until it breaks. If it is impossible to obtain current from a second generator, this exciting can be done with a strong battery, by connecting the carbon or copper plate of the battery to the positive brush holder of the dynamo and the other plate with the negative brush holder. If there is no second machine or battery at hand, connect the leads from the brushes of the machine through a long fuse of not more than 15 or 20 amperes capacity, and then start the machine. It it does not generate current enough to melt this fuse, you may be certain there is something wrong with the armature; either a short circuit or an open circuit. If it does blow this fuse, try again to get it to self-excite. If it does not now build up, something is wrong with the shunt winding or connection. These remarks apply to machines which have been giving current and then refuse to do so.

If it is a new machine which refuses to excite when the connections all seem to be right, reverse the connections; that is, connect the wire which is on the positive brush to the negative

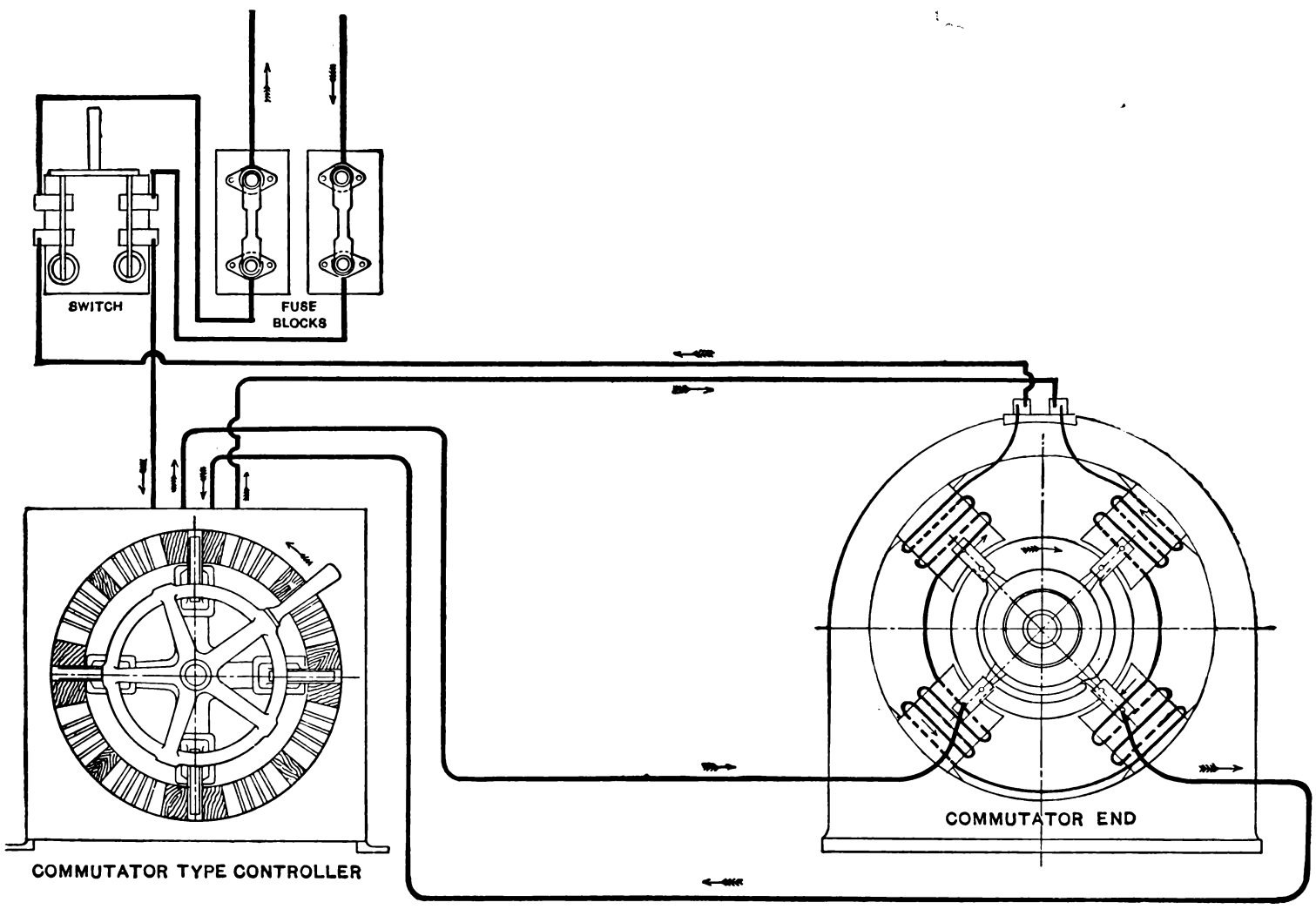

SERIES WOUND MOTOR

Fig. 3719.

brush, and the negative one to the positive brush. If this does no good, change them back and locate the fault as described above.

Figs. 3715 to 3719 are the standard wiring diagrams of the Westinghouse machines and represent the connections and the series and shunt windings of four and six pole compound wound machines, as seen from the commutator end. The shunt coils are connected in series with one another; the series coils are also connected in series with one another.

The volt meter shows the voltage or potential; that is, the potential difference between the wires of a circuit or the brushes of a dynamo or motor. Direct current volt meters are so constructed that the current must always pass through them in the same direction, and have one binding post marked **X**, which must always be connected to the positive wire or brush.

The ammeter, or ampere meter, is used to measure the quantity of current flowing in the circuit in which it is connected.

Switches are of various kinds, among them the single or double jaw, or pole, for ordinary use; the triple jaw, for throwing generators in multiple; the dynamo changing, for transferring machines from one circuit to another, or circuits from one machine to another.

Fuses are strips of lead or other readily fusible metal or alloy, which are placed in the circuit at one or more points. If the current increases above the rated capacity of the fuse, it will melt and thereby open the circuit. Fuses are usually marked with the number of amperes which they will safely carry. The automatic circuit breaker may be used in place of the fuse, as it automatically cuts a machine out of circuit if the current exceeds that for which the instrument is set. The lightning arrester is used to protect electrical apparatus from damage by lightning. An arrester is unnecessary for an isolated plant, unless the circuit extends out of doors. The Westinghouse arrester is automatic in action, but it should be examined from time to time to see that the connections are tight and the instrument undisturbed.

The hand regulator or field rheostat is a resistance placed in the shunt field circuit of a machine; in a generator it is used to regulate the voltage and in a motor to regulate the speed. By decreasing or increasing the amount of resistance in the circuit the voltage or speed is proportionately varied. Always start a motor with all its field resistance out and its armature resistance in.

An automatic starting and stopping rheostat is used with a shunt or compound wound motor. It prevents an abnormal flow of current through the armature while the machine is getting up to speed. It is then cut out of circuit. Should the external circuit be broken, the box will automatically cut in its resistance and then open the armature circuit.

MULTIPOLAR BRUSH ARC GENERATORS.—The Brush arc generator, Fig. 3720, of the General Electric Co., is of the open coil type, the fundamental principle of which is illustrated in Fig. 3721. Two pairs of coils, placed at right angles on an iron core, are rotated in a magnetic field. The horizontal coils represented are producing their maximum electromotive force. The brushes are placed on the segments of the four-part commutator so as to collect only the current generated by the two horizontal coils. The other coils are open circuited or completely cut out of the circuit.

Such a machine will generate current continuous in direction but fluctuating considerably in amount. These fluctuations will be diminished by the addition of more coils to the armature.

Fig. 3721 is a diagrammatic representation of an eight-coil machine. The ends of coils diametrically opposite are connected as in the four-pole machine (Fig. 3722), but to avoid complications these connections are omitted on the diagram. In the eight-coil machine, one pair of coils, A^1, A^2, is generating maximum electromotive force. At right angles to these coils, the coils C^1 and C^2 are generating no electromotive force. In intermediate positions, the coils B^1, B^2, D^1, D^2 are generating a useful electromotive force, although one which is not so high as that generated by the coils A^1 and A^2.

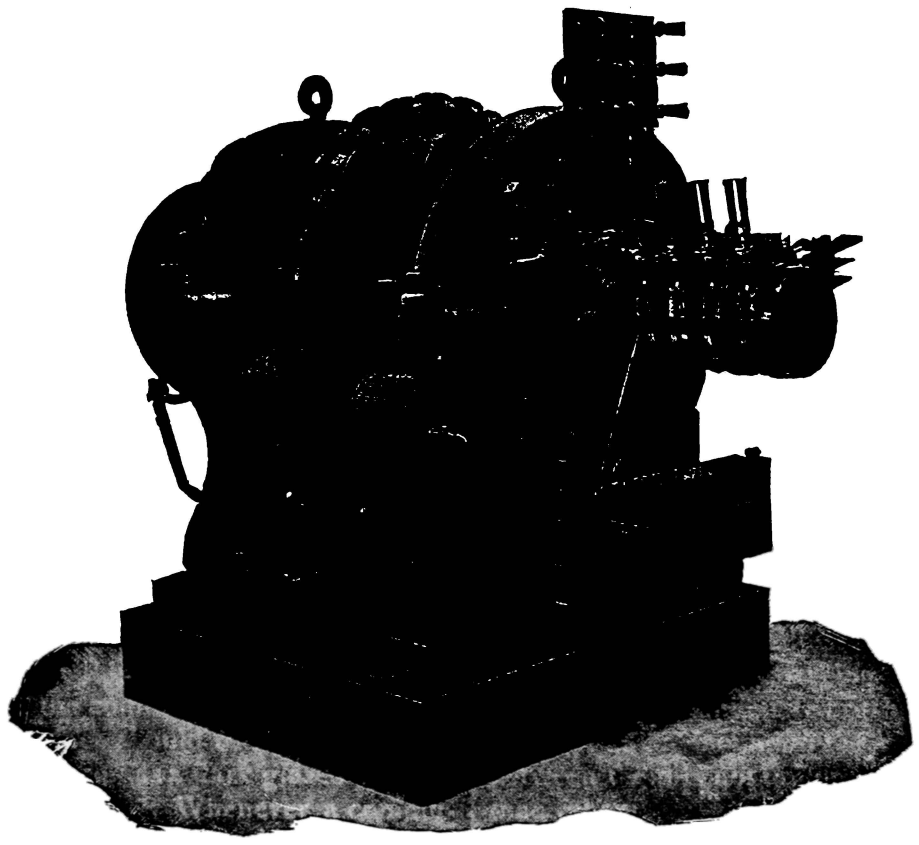

Fig. 3720.

In collecting the current from such an armature, the coils in the intermediate positions cannot be connected in *parallel* with the coils generating maximum electromotive force, because their electromotive force is lower. The pair of coils A^1, A^2 can, however, be placed in series and connected in *series* with the two pairs of coils B^1, B^2, and D^1, D^2, which may be placed in parallel with each other, since they occupy similar positions in the magnetic field.

The resistance of the coils in intermediate positions is therefore halved, and the electromotive force is equal to the electromotive force developed by one pair of coils. In the Brush arc generator, a double commutator is used to automatically make these connections.

In Fig. 3723 this commutator is developed or spread out, and the coils are represented diagrammatically. With the brushes in the position shown, the current enters the brush P and the coil A^1, which is placed in series with the coil A^2 in a similar part of the magnetic field. From the brush Q, the current is transferred to the second commutator, which it enters by the brush R. This brush, in the position shown, rests on two segments, thus connecting two pairs of coils in parallel. The current flowing through the coils B^1, B^2, and D^1, D^2 leaves the machine by the brush S. The coils C^1 and C^2, which are generating no electromotive force, are disconnected.

The same arrangement is shown in Fig. 3724, in which the coils have been replaced by battery cells.

Although the number of coils and therefore the number of commutator segments in larger Brush machines do not correspond with these diagrams, the principle of operation of the ma-

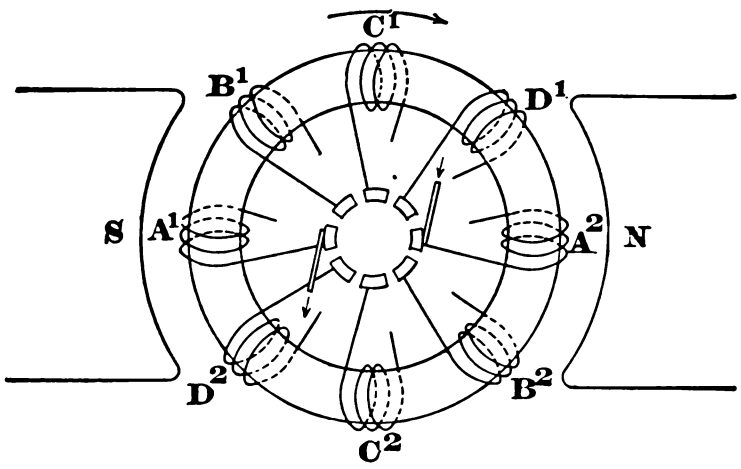

Fig. 3721.

chine is, in every case, the same, and can be readily understood by reducing it to these elementary forms.

The function of the Brush multicircuit device is to divide the load into several circuits, thus reducing the maximum potential required, and, consequently, the strain on the insulations. The

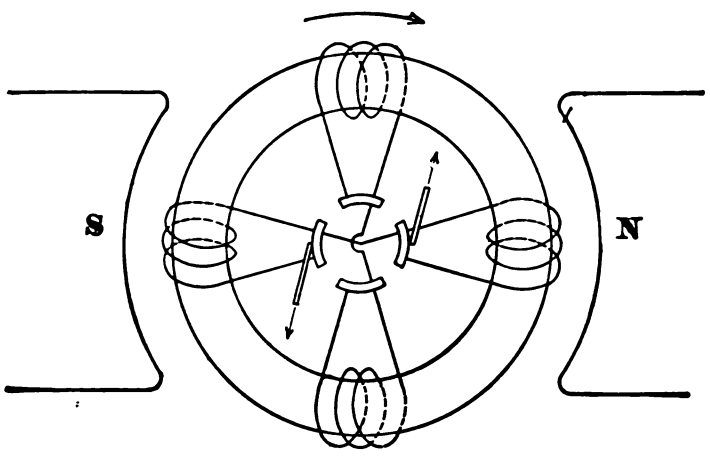

Fig. 3722.

operation of the device will be understood by reference to the following diagrams and explanations.

Figs. 3721 to 3724 show that the potential of an eight-coil machine is made up of the potential of one pair of coils giving maximum electromotive force, and the potential of two other pairs in parallel, giving a lesser electromotive force.

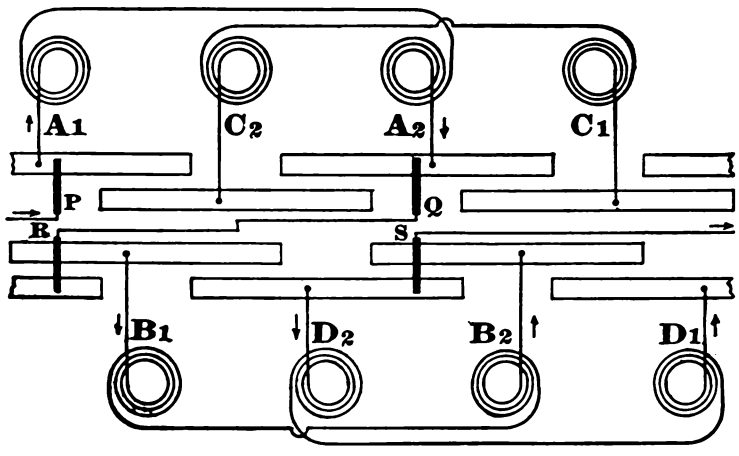

Fig. 3723.

Inasmuch as one pair of coils is always in series with two other pairs in parallel, it is immaterial whether the load is all placed between the terminals of the machine or divided between the various coils; for example, instead of connecting *all* the lamps between the brushes P and S, some may be connected between brushes P and S, and the remainder between the brushes R and Q.

This arrangement will be more clearly understood by referring to Figs. 3725 and 3726, in which the coils of the machine have been replaced by battery cells. These diagrams show the arrangement of the coils when the brushes occupy the position shown in Fig. 3723.

With this arrangement it is evident that, having a given number of lamps to install, they may be connected between the points P and S, as in Fig. 3725, or part of them may be connected between P and S, and the remaining ones between R and Q, as in Fig. 3726.

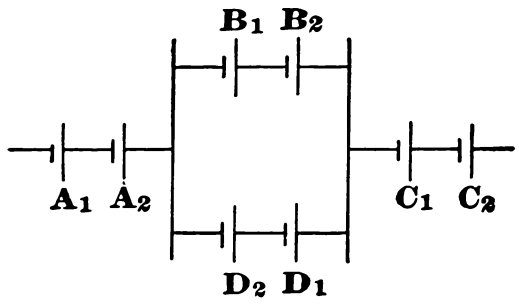

Fig. 3724.

Inasmuch as the potential between P and S, Fig. 3725, is adequate to supply the total number of lamps installed in the circuit, it is immaterial as to how the lamps are divided between P and S and R and Q, Fig. 3726. If more lamps are installed between P and S than are provided for by the potential generated by the cells (coils) connected between the points P and Q, the deficit will be made up by the potential generated between R and S.

In the Brush multicircuit device, a number of switches are so

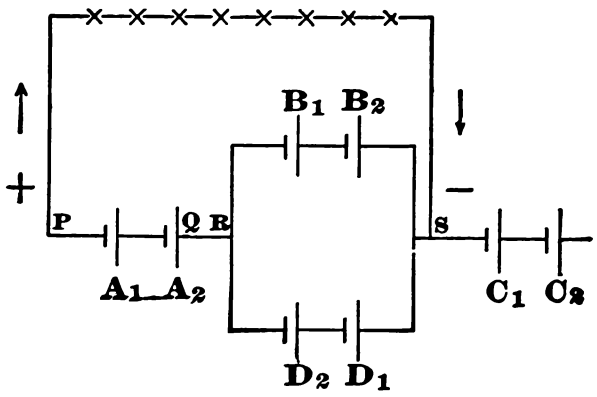

Fig. 3725.

arranged that lamps may be cut in or out of a divided circuit in the manner indicated. In the larger machines, the principle of operation is the same.

SETTING UP AND RUNNING BRUSH ARC GENERATORS.*—The bed-plate should be securely fastened to a dry wood sub-base not less than 10 inches in thickness, except on wood floors, in which case it may be somewhat less, according to the thickness of the floor; it should, anyhow, sit upon a substantial foundation,

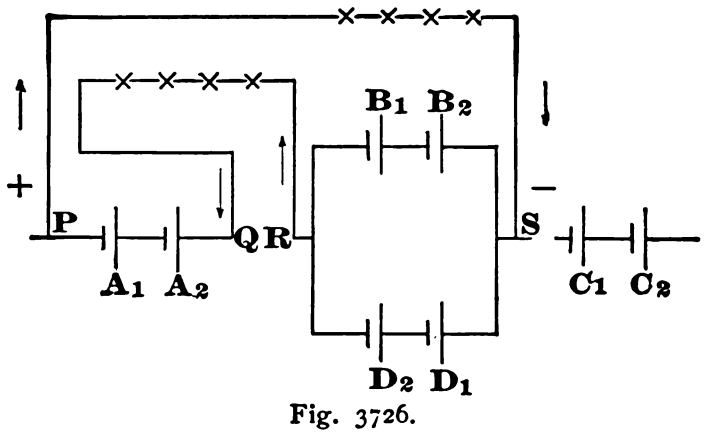

Fig. 3726.

as will be seen by reference to Figs. 3728 to 3730. In these figures the brickwork is laid on a bedding of cement, and the section plates and bolts properly placed as the work progresses. The foundation bolts should be cut off at least 2 inches below the top of the wood sub-base and well covered with sulphur to insure complete insulation from the iron bed-plate. In whatever manner the bed-

* Furnished by General Electric Company.

plate is mounted, the greatest care must be taken to have a thorough and permanent insulation from the earth.

Four short bolts pass through the generator frame and are used to hold the machine in position on its bed-plate ; they are inserted in the slots in the iron base-plate. These bolts should be kept tight, except when adjusting the tension of the belt. To allow for stretching of the belt, the bed-plate should be so placed that the centre line of the generator will be nearer the engine or countershaft than is the centre line of the bed-plate.

The lower half of the frame is first placed in position on the bed-plate and bolted down ; while this is being done, the ratchet screw for adjusting the belt should be screwed into the frame and slipped into place on the bed-plate as the frame is lowered. The lower halves of the bearing boxes should be removed, and the oil chambers thoroughly cleaned, and filled with oil to the height indicated by the mark on the oil gauge ; the lower halves of the bearing boxes may then be replaced. The proper method of suspending the armature is shown in Fig. 3731. Before lowering it into its place, the oil rings should be put on the shaft. When placing the armature in its bearings, it is important to prevent the armature coils (bobbins) from rubbing against the pole pieces.

The upper halves of the bearings with their cast-iron washers may next be put on and securely bolted down with the clamping screws. When handling the magnet yokes, a rope sling should be used, as is shown in Fig. 3732. The yoke should hang very nearly level, with the pole shoe slightly raised, so that in lowering the piece into place there will be no danger of chafing the armature coils or insulation. The bolts should be inserted as shown in Fig. 3732, and, as the yoke is lowered, these will act as a guide and drop it into its proper place. The frame bolts must be screwed up especially tight, as any movement of the yokes while the machine is running will ruin the armature. The brush-holder yoke and the regulator rocker-arm should be put in place, with a little oil on the bearing seats to insure freedom of movement through the entire range.

A pressure brush should always be used over the under brush, as it improves the running of the commutator and secures better contact on the segment. The brushes should be set about 5⅛ inches from the front side of the brass brush-holder. In setting the brushes, commence with the inner pair and set one brush about 5⅛ inches from the holder to tip of brush, then rotate the rocker or armature until the tip of the brush is exactly in line with the end of a copper segment, as is shown in Fig. 3733. The other brush should be set on the corresponding segment, ninety degrees removed, as in Fig. 3733. If the length of the brush from the holder is less than 5⅛ inches, move both brushes forward until the length of the shorter brush is 5⅛ inches from the holder. Then set the two extreme outer brushes in the same manner, clamping firmly in position ; and by using a straight-edge or steel rule, all brushes can be set in exactly the same line and firmly secured. The spark on one of the six brushes may be a trifle longer than on the others ; to remedy this, move the brush forward a trifle so as to make the sparks on the six brushes about the same height. Equality in the spark lengths is not essential, but it gives at a glance an indication of the running condition of the machine. Brushes should not bear on the commutator less than ⅛-inch from the point of the brush, or they will drop into the commutator slots, as in Fig. 3734, and pound the copper tip of the wood block. On the other hand, if the bearing is too far from the end, or the brushes are set too long, as in Fig. 3735, the point of the brush is lifted from the leaving end of the segment and causes sparking. Fig. 3736 shows the correct manner of setting, with the tip of the brush nearly tangential, and still on the segment as it leaves.

Should the commutator need lubrication, oil it very sparingly ; once or twice during a run being ample. If the oil shows a tendency to blacken the commutator, wipe it off with a dry cloth.

The machine, of course, generates high potential, and the cloth should therefore be placed on a stick so that the hand is not placed in any way between the brushes. To prevent any possibility of shock, all switches on the terminal board should be closed.

The commutator should be cleaned as soon as the current is shut off. Figs. 3737, 3738, 3739, and 3740 show the connections of the multipolar Brush arc generators. The current enters the field from the negative side of the circuit and takes the following course : Spool 1, to 2, to 7, to 8, to 5, to 6, to 3, to 4, to terminal board, to commutator. The field current is in the same direction for clockwise and counter-clockwise machines.

To change the direction of rotation, remove the brush-holder cables and the studs from the rocker. Take off the brush-holder rocker and reverse it, so as to bring the handle on the opposite side of the machine, changing at the same time the clamp stud to the same side as the handle, then replace the brush-holder studs in the rocker ; but before setting, remove and reverse the brush holders, so that the binding screws may be brought on the same side of the stud clips which hold the cables in position ; square the brush holders with the studs, and fasten, setting the studs in the following manner : Remove the external rack at the lower end of the rocker arm, and replace by an internal rack, using the same insulation ; being careful to so align the rack that it will run safely through its entire arc. Remove

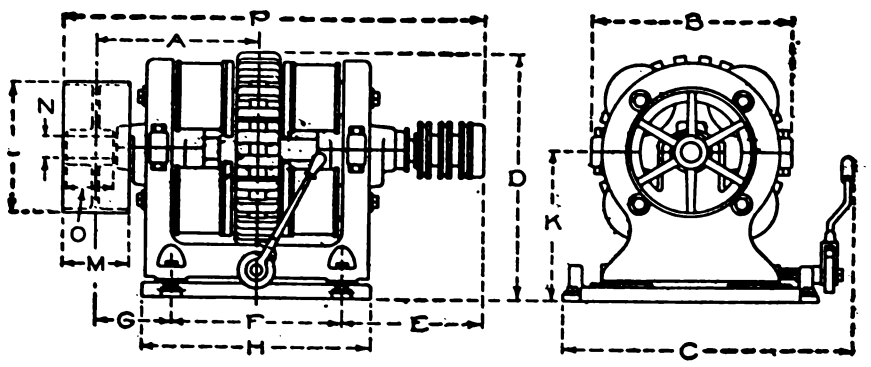

GENERAL DATA ON MULTIPOLAR BRUSH ARC GENERATORS.

Volts.	Amperes.	Capacity in 1200 C.P. Lamps.	Capacity in 2000 C.P. Lamps.	Watts.	Class No. of Machine.	Diam. of Armature.	H.P. Required at Pulley.	Revs. per Minute.	DIMENSIONS. A	B	C	D	E	F	G	H	K	L	M	N	O	P
3250	9.6	—	65	31200	8½	28 "	48	750	26¾"	32½"	47¼"	41¼"	25 1/16"	28 "	12¾"	38½"	25¼"	20"	12½"	3½"	8 "	72¼"
4500	6.6	90	—	29700																		
4000	9.6	—	80	38400	9	31¼"	60	700	29 "	33¾"	47¼"	45½"	25 5/16"	30¾"	13 5/16"	41½"	26¾"	22"	12½"	3¾"	8 "	76½"
6000	6.6	120	—	39600																		
6000	6.6	120	—	39600	9½	31¼"	60	700	29 "	33¾"	47¼"	45½"	29½"	30¾"	13 5/16"	41½"	26¾"	22"	12½"	3¾"	8 "	80⅛"
8000	5.	—	—	40000																		
5000	9.6	—	160	48000	10	33½"	73	600	30¼"	37½"	51½"	48½"	25 9/16"	32 "	14¼"	42¾"	29 "	24"	12½"	3⅞"	9 "	77 15/16"
6250	9.6	—	125	60000	11	39¼"	90	500	32 5/16"	45½"	57½"	55½"	26 7/16"	35 "	14 13/16"	45⅞"	32⅞"	28"	14½"	4⅛"	9¾"	83½"
6250	9.6	—	125	60000																		
8000	6.6	160	—	52800	12	39¼"	90	500	32 5/16"	45½"	57½"	55½"	30 5/16"	35 "	14 13/16"	45⅞"	32⅞"	28"	14½"	4⅛"	9¾"	87⅜"
8000	9.6	—	160	76800	13	42¾"	114	500	34¾"	49¾"	62½"	61 "	37¾"	35 "	17⅛"	48½"	36¾"	32"	16½"	5 "	11½"	92¾"

Fig. 3727.

the brush-holder caps, and placing the angle gauge A, Fig. 3741, on the commutator, turn the stud until the gauge rests squarely on the face of the brush holder; tighten the stud moderately, and

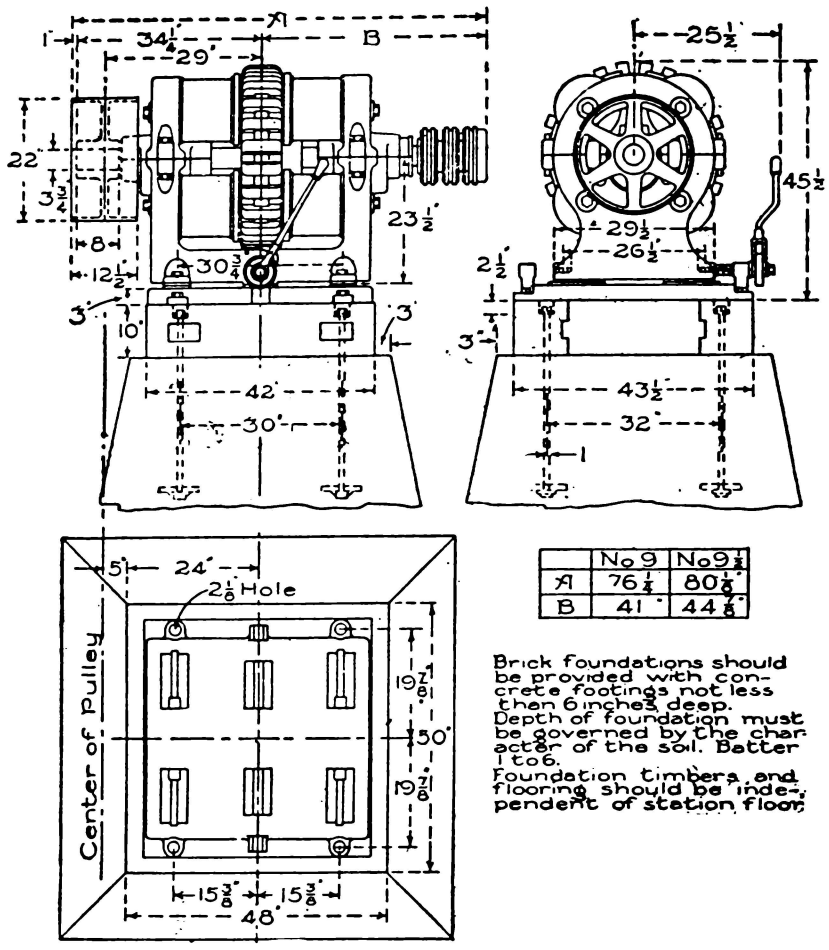

	No 9	No 9½
A	76¼	80⅛
B	41	44⅝

Fig. 3728.

repeat the operation on the exteme outer and inner rings of the commutator, noting the positions of brush-holder faces relative to the line *a* in gauge A, Fig. 3741. If the position of the line *a* relative to the face is not the same in both instances, the stud is

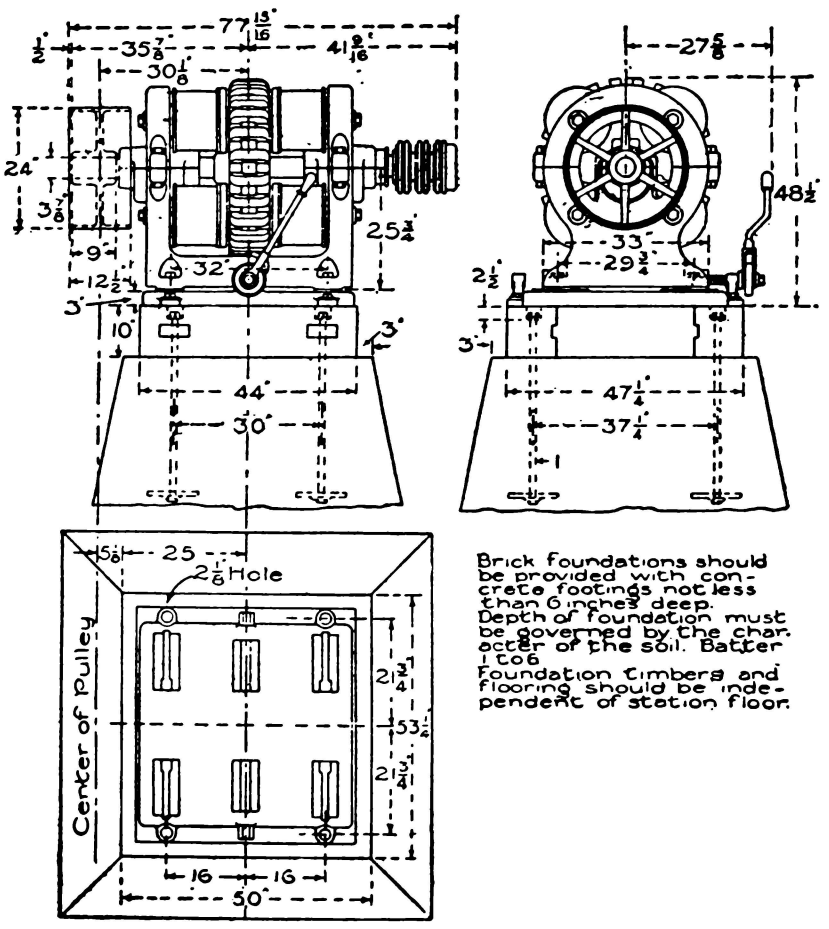

Fig. 3729.

not parallel to the commutator face and should be packed with mica or paper between the shoulder of the stud and the brush rocker till parallelism is obtained; then tighten the studs in position.

Care should be taken in setting and fastening studs in position, as otherwise the length, position, and tension of the brushes will be changed. Remove the commutator segments and turn the wood blocks end for end, or in such a position that the brush in leaving the copper segment will come in contact with the copper tip of the wood block. For convenience, change the position of

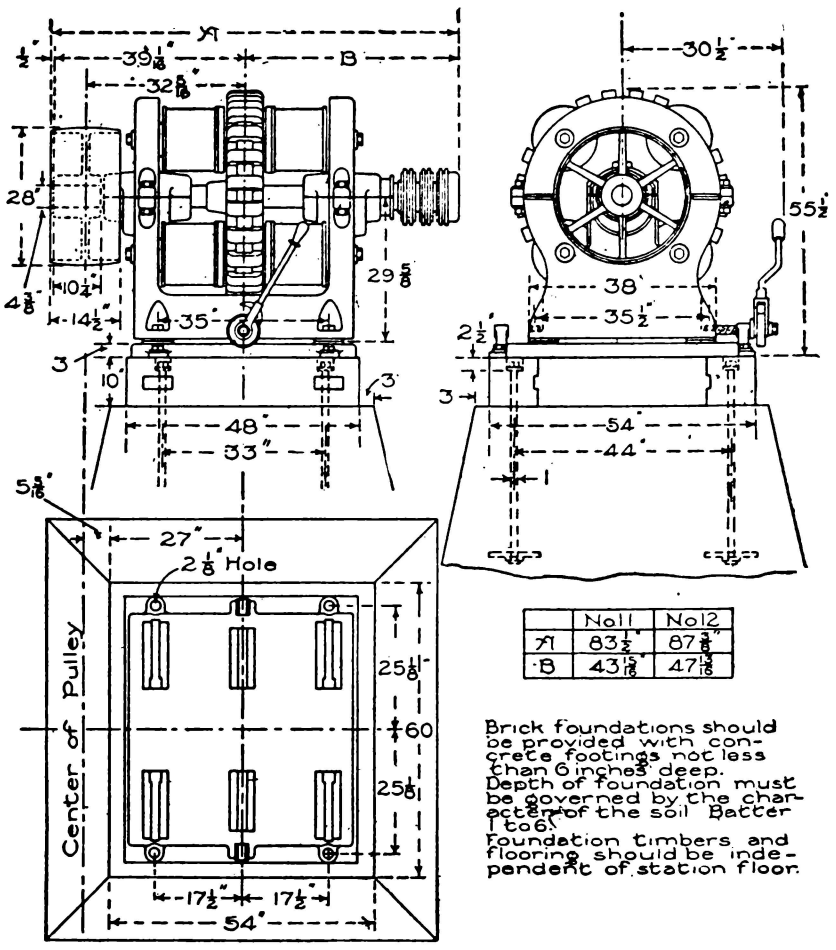

	No 11	No 12
A	83½	87⅜
B	43 5/16	47 5/16

Fig. 3730.

the switch handles on the terminal board; this can readily be done by removing the binding and switch posts and reversing their positions on the board. Connect the brush holders to the terminal board; wires between the controller and regulator should be reversed and the clutch short circuiting cable (which is attached to the lower button on the left-hand side of the

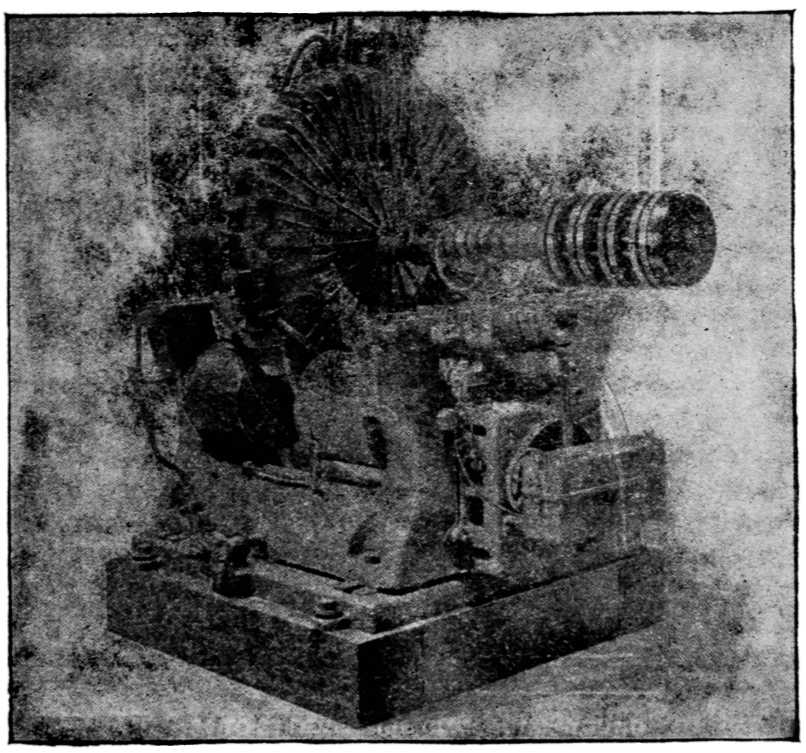

Fig. 3731.

rheostat) should be carried to the opposite binding post with the wire from left-hand lower binding post on the controller.

The current of the Brush arc machine is automatically maintained constant by the use of one of the following regulators. The regulator, Fig. 3742, is placed on the frame of the machine beneath the commutator, and a constant motion is imparted to its

main snaft through a small belt running around the armature shaft. By means of magnetic clutches and bevel gears, a pinion shaft is rotated, which moves the rack and the rocker arm and so shifts the brushes on the commutator to maintain a spark of about $\frac{3}{8}$ inch on short circuit and $\frac{1}{8}$ inch at full load; at the same time the rheostat arm is moved over the contacts to cut resistances in or out of the shunt around the field circuit.

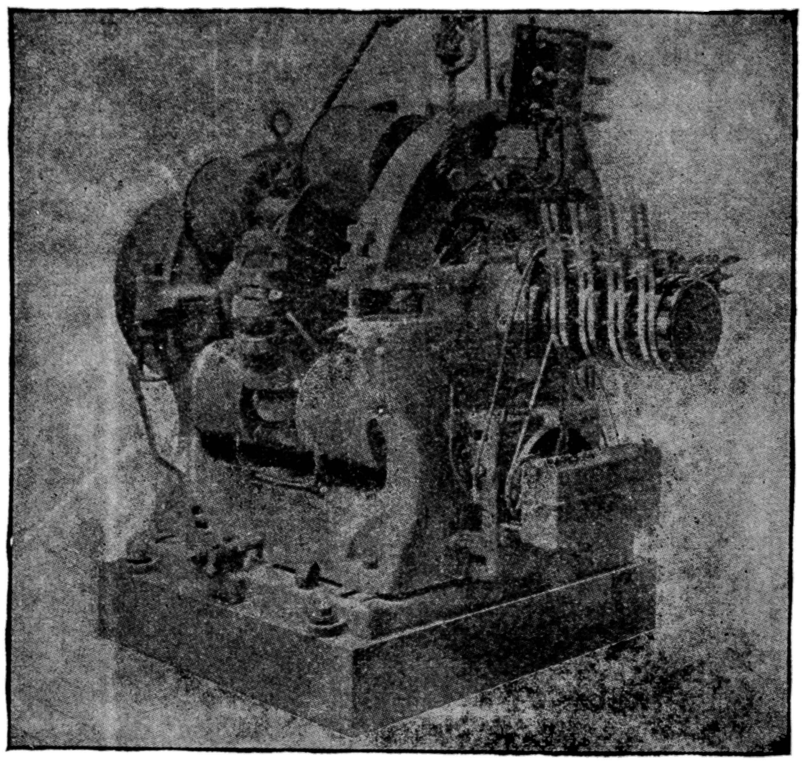

Fig. 3732.

The current for the magnetic clutches is regulated by the controller; this consists principally of two magnets which are energized by the main current and act when the current is too high or two low by sending a small current to one of the clutches. An examination of the controller, Fig. 3743, in connection with Fig. 3742, will give a clear idea of its regulating action. It is generally advantageous to make the yoke which carries the brushes on the machine and the arm moving the rheostat rather tight. As the magnetic clutches act with considerable force, it is not necessary to adjust these moving parts so loosely that they will move without considerable pressure on the rocker handle. Less difficulty will then be experienced in adjusting the controller.

For shunt lamps, the controller may be adjusted to permit a variation of .4 ampere above and below normal; for differential lamps, the variation above and below should not exceed .2 ampere. The limits given in the following instructions are for differential lamps, and may be extended .2 ampere above and below for shunt lamps.

If the controller is out of adjustment and fails to keep the current normal, do not try to adjust the tensions of both arma-

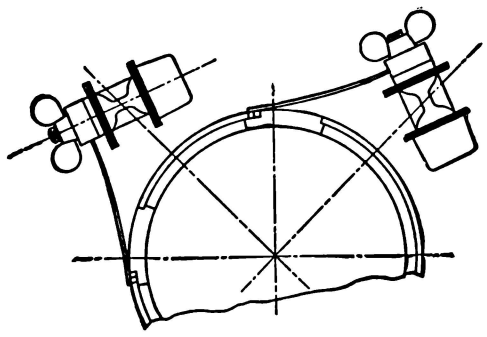

Fig. 3733.

tures at the same time. For example: Suppose the current to be too high; either one of the two spools may be out of adjustment. The left-hand spool I, Fig. 3743, may not take hold quickly enough, or spool F, Fig. 3743, may take hold too quickly. To make the adjustment, screw up the adjusting button K on the right-hand spool, increasing the tension. This will have a ten-

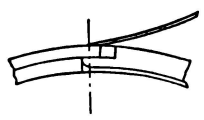

Fig. 3734.

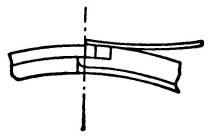

Fig. 3735.

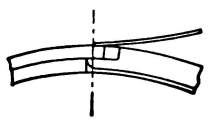

Fig. 3736.

dency to let the current fall much lower before the armature comes in contact with H. To cause the current to increase, simply tap the armature G quickly with a pencil or piece of wood, forcing it down to its contact, and at the same time watch the ammeter. The current may be brought up to 6.8 amperes if 6.6 is normal, or to 9.8 if 9.6 is normal. With the current at 6.8 amperes, which is .2 ampere high, the adjusting button L should be turned to increase the tension on this spring until the armature M comes in contact with the contact N, which will force the current down through O. The clutch which pulls the brushes forward and rocks the rheostat back for less current will thus be energized. Repeat this adjustment two or three times, but do not touch the adjusting button K. Adjust L until it is just right.

At the side of the armature M a little wedge is screwed in by means of an adjusting button, and increases or decreases the

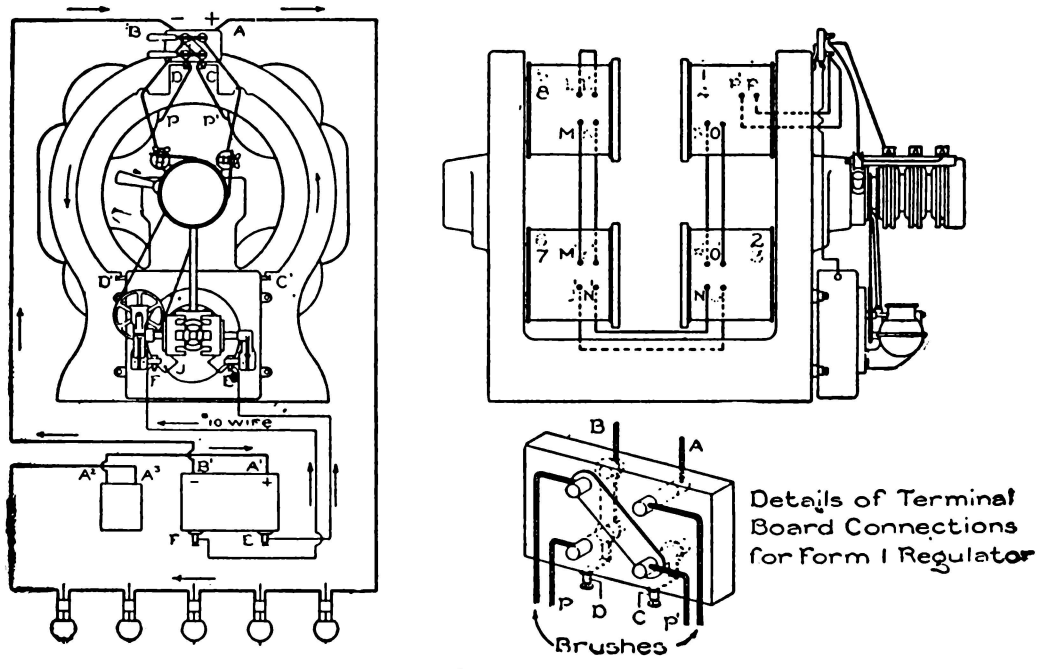

Fig. 3737.

leverage on this armature. See that this wedge is fairly well in between the core or frame of the spool and the spring of the armature. The armature may be taken out and the spring slightly bent. It is advisable to have the screw which passes through the adjuster button L about half-way in, to allow an equal distance up and down for adjusting this higher spring after the wedge is in the right position to give the necessary tension on the spring which is fastened to the armature M. In the right-hand corner P, a small bent piece of wire is placed for tightening up the screw which fastens the spring to the frame of the spool. As the contact, made by the spring and the plane of the spool held together by a screw and button, is a part of the magnetic circuit, it will be almost impossible to get this spring back to exactly the same tension after once moving it. Therefore, the adjusting buttons of the controller must be turned slightly in order to bring it back to its proper adjustment. This, however, is an after consideration, and care should be taken to have the screw which holds the spring and frame together always tight.

Having adjusted the spool I so that the current will not rise above 6.8 (or 9.8) amperes, move the armature M up to contact N with a pencil or piece of wood, causing the current to be reduced to about 6.2 (or 9.2). After the current settles at this point, decrease the tension on the spring which is fastened to armature G, allowing this armature to fall down to contact H. Current will then flow through Q, which will rock the brushes back and also move the rheostat arm for more current. As the spool I has been adjusted for 6.8 (or 9.8) amperes, the current cannot rise above that amount, no matter how the spool F is adjusted.

With a very little practice in moving the armature of one spool with a pencil, the other can be adjusted much more readily than if an attempt is made to adjust the screws K and L at the same time.

The two small shunt coils R and S are connected around the two contacts simply to decrease the spark between the silver and platinum contacts. If they should become short circuited in any way, so that their resistance becomes diminished, sufficient current may pass through either of them to operate the regulator. If unable to locate the trouble, disconnect these coils at points T and U, when a thorough examination can be readily made. M and G need not move more than just enough to open the contact —$\frac{1}{32}$ inch is ample.

In starting the multipolar Brush arc generator with the regulator shown in Fig. 3742, the lower switch, which short circuits the field, should be opened last. The switch in the left-hand

SINGLE CIRCUIT. COUNTER CLOCKWISE ROTATION WITH FORM I REGULATOR

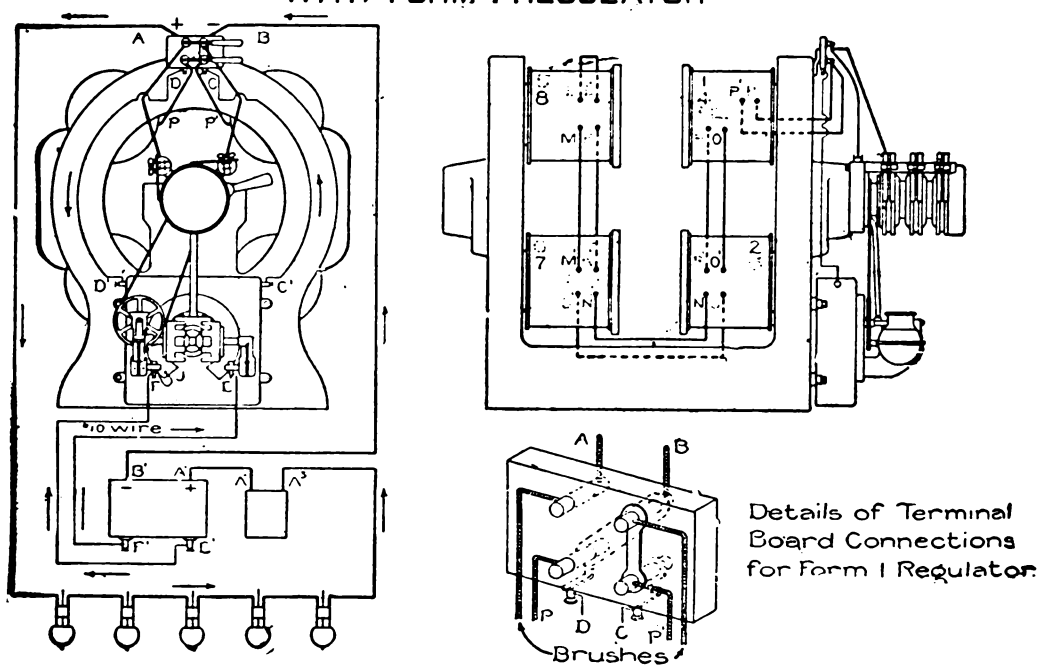

Fig. 3738.

CONNECTIONS OF Nos. 8½, 9, 9½, 10, 11 AND 12 BRUSH ARC GENERATORS SINGLE CIRCUIT, CLOCKWISE ROTATION, WITH FORM 2 REGULATOR

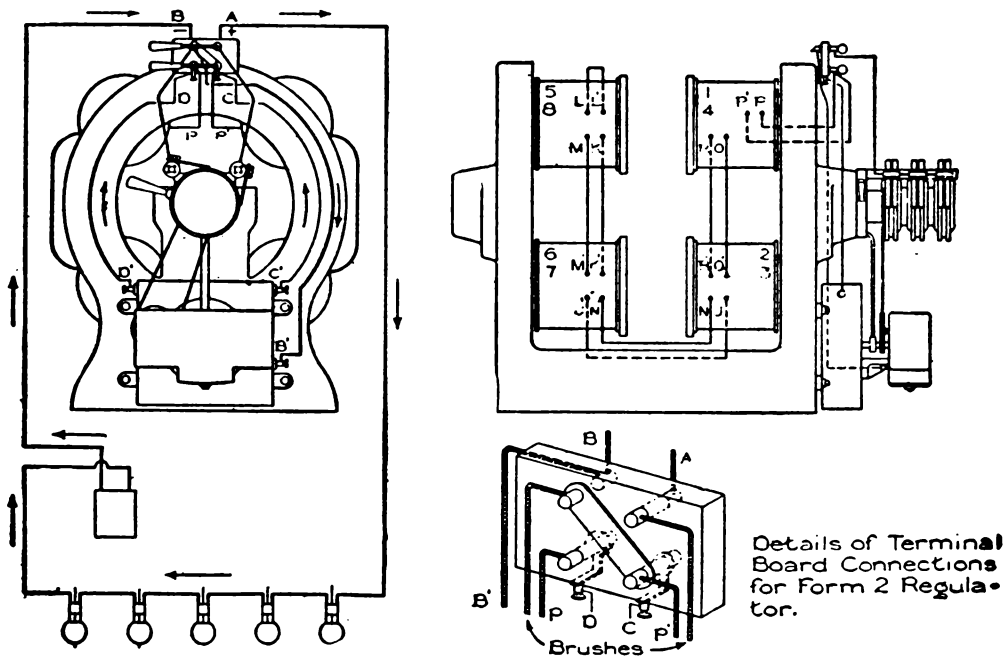

Fig. 3739.

corner of the controller, Fig. 3743, cuts out the two resistance wires which are used to force the current the wires O and Q carry to the clutches.

Open this switch, which leaves the automatic device of the controller in circuit, so that it will move the brush rocker; unclamp the brush rocker from the rheostat arm rocker and move the brushes by hand to give the proper spark, allowing the rheostat arm, however, to be moved by the controller. After the switches are opened, the rheostat arm will go clear around to a full load position, and then, as the current rises, the controller takes hold and brings the arm back. In the meantime, rock the brushes forward or backward, and keep the spark about the proper length—say ⅛ inch at full load to ⅜ inch on short circuit—gradually the rheostat arm will settle and the spark will become constant; then the machine will give its proper current; clamp the rocker and rheostat arm together and let the machine regulate itself.

This method is much better than opening the switches on the machine and allowing the wall controller to take care of the machine from the start; by allowing the controller to start the machine, a trifle longer spark is obtained than by the other method, unless the machine is run from the beginning on a very full load.

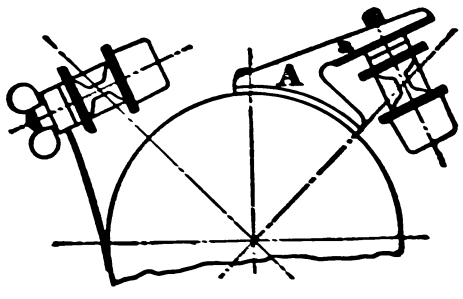

Fig. 3741.

The machine will require a trifle longer spark on light loads, or on bad circuits, than when running at full load. This fact should be borne in mind in wet weather, when trouble with grounds is experienced.

The other regulator is shown in Fig. 3744. The connections for clockwise and counter-clockwise generators of the single circuit or multicircuit type are shown in Figs. 3739 and 3740; the connections of the field magnets are the same for either clockwise or counter clockwise.

The switches on the terminal board should be arranged as shown in Fig. 3739 for clockwise and Fig. 3740 for counter-clockwise single circuit generators. The counter-clockwise generator has a straight, vertical strap connecting the two vertical clip posts. The clockwise generator has a diagonal strap. The terminals of the machine are on the back of the board. The positive terminal A, is connected through the board to the switchpost B; the negative terminal is insulated from the switch clip post, and is used only as a connector for the cable running to B¹ on the regulator; in returning to the machine, the current can go directly to B¹ instead of to B. The connections of the second regulator are shown in Fig. 3745. This regulator performs two operations: Sweeps a set of contacts, throwing more or less resistance in shunt with the field circuit, and at the same time rocks the brushes so that the spark is kept at proper length, varying from ⅛ of an inch at full load to ⅜ of an inch on short circuit. A small belt runs over the armature shaft M and drives the rotary oil pump P; this pump draws oil from the containing case and forces it through passages to the valve T, a section of which is shown in Fig. 3746.

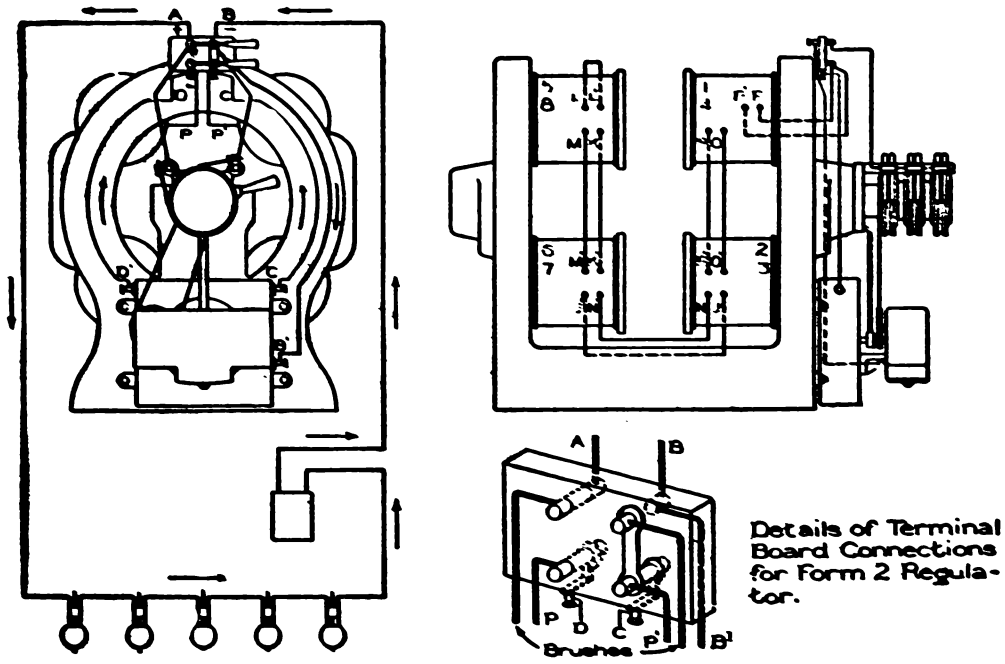

Fig. 3740.

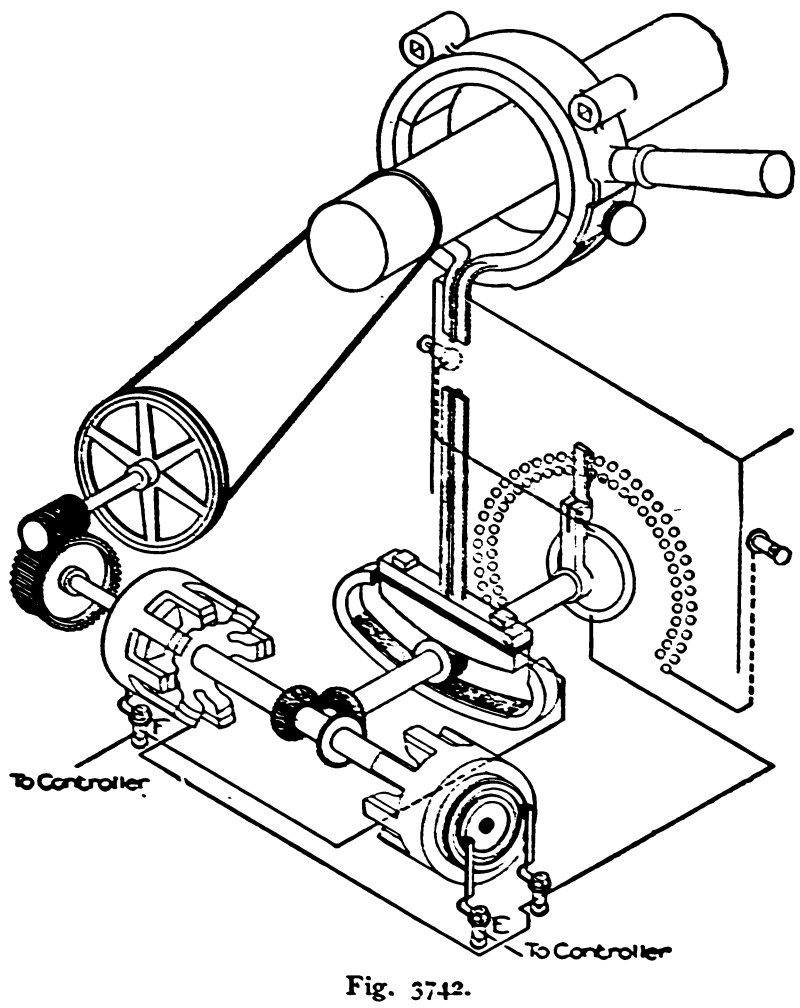

Fig. 3742.

The ports overlap this valve so that the oil may flow through when the valve is in its central position. This valve is controlled by the electromagnet F, Fig. 3745, which actuates the armature U and the lever H. The pull on the armature U varies with the strength of the current which excites F; the opposite end of the lever H is attached to the spring G, which is adjusted by the screw nut R so as to hold the valve in its central position when the nor-

mal current is flowing through the controlling magnet; if the current is too strong, it pulls down the armature U, thus raising the valve and throwing more oil on the upper side of the circular piston head S, and allowing the oil to run out from the lower side, thus forcing the piston X around clockwise, lowering the current by moving the contact arm so as to shunt more current from the fields, at the same time moving the brushes forward until the current returns to its normal value; should the current be too slow, reverse the operation.

To raise the current, turn the hard rubber nut R, Fig. 3745, to the right; if the current is too high, turn the nut to the left. The limits which the regulator operates are determined by the number of turns in the spring G. If the spring G is stiffened by cutting off some of the turns and stretching it out, the limits of regulation will be wider. If the spring has a greater number of turns, it will regulate within narrower limits, but be more liable to "pump." The regulators are shipped with springs, which have been found to give the best service for usual conditions.

The regulator may be caused to operate quickly in one direction and slowly in the reverse direction by changing the position of the stops on lever H. By raising the stop on the right-hand side of lever H, the movement on increasing the current will be retarded.

The safety or relief valve, shown in Fig. 3747, is set to operate at a pressure of about 15 pounds to the square inch, so as to relieve the pump. Fig. 3747 also shows the ports and the method of changing the plugs so as to run the pump with an open belt for either clockwise or counter-clockwise machines. There is a small wire on the back of the circular piston which may be screwed into the plug in these passages, for the purpose of drawing them out and changing their position.

Before starting the machine, the oil box of the regulator should be filled with a light spindle or dynamo oil nearly up to the shaft which carries the contact arm, etc. As soon as the machine is started, the level of the oil will be somewhat lowered.

CONNECTIONS OF BRUSH CONTROLLER

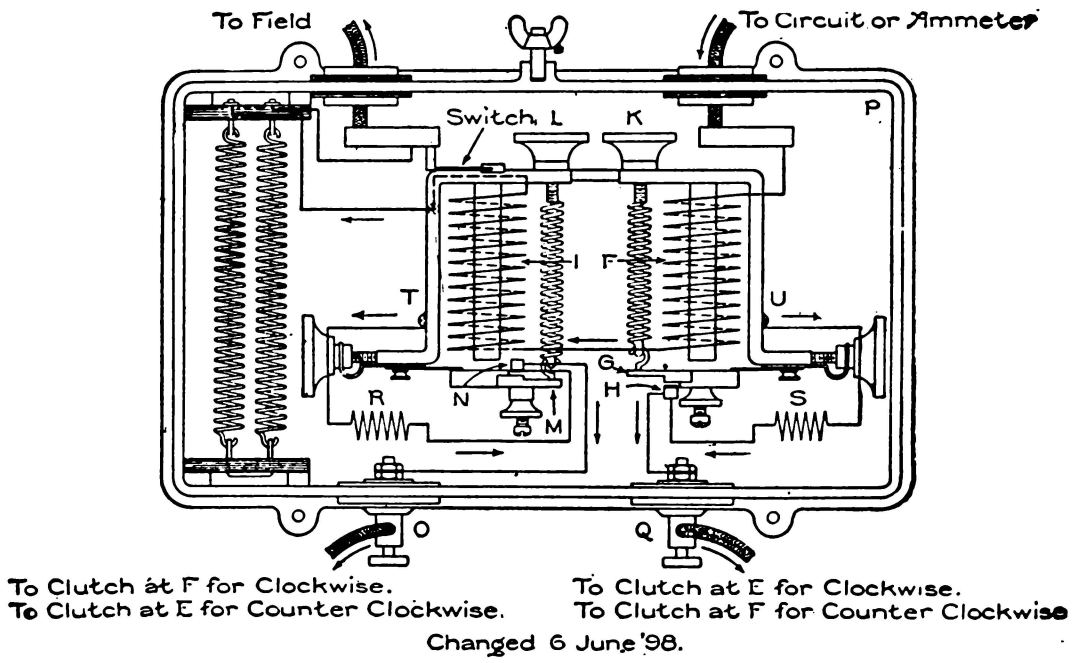

Fig. 3743.

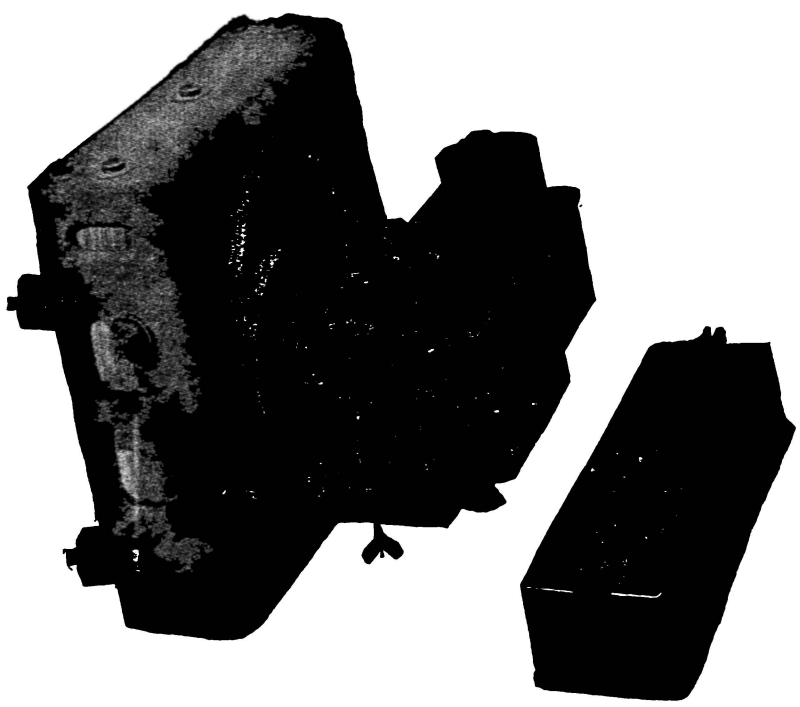

Fig. 3744.

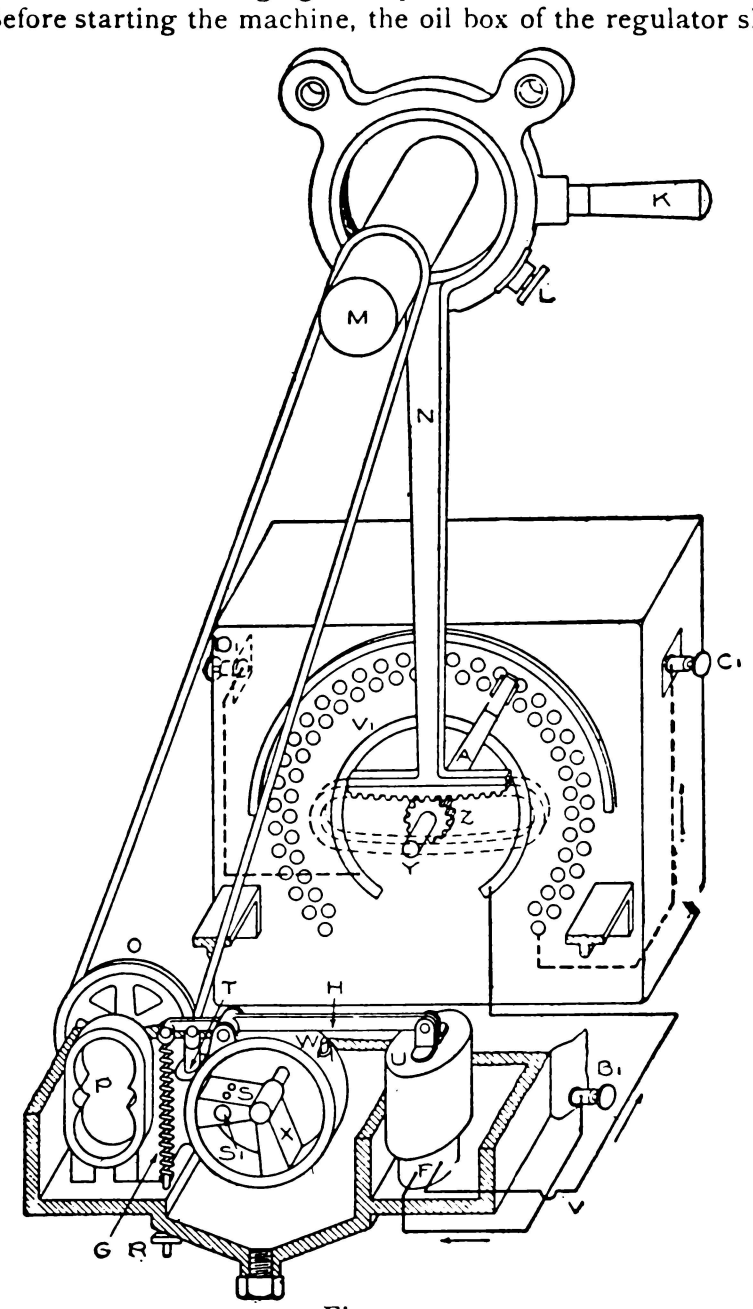

Fig. 3745.

If the pump fails to start promptly, it may be started by shifting the brushes backward and forward, and moving the contact arm, to force out the air and draw in the oil.

In a newly installed machine, the oil should be changed at least once a week for the first month or six weeks, until all dirt

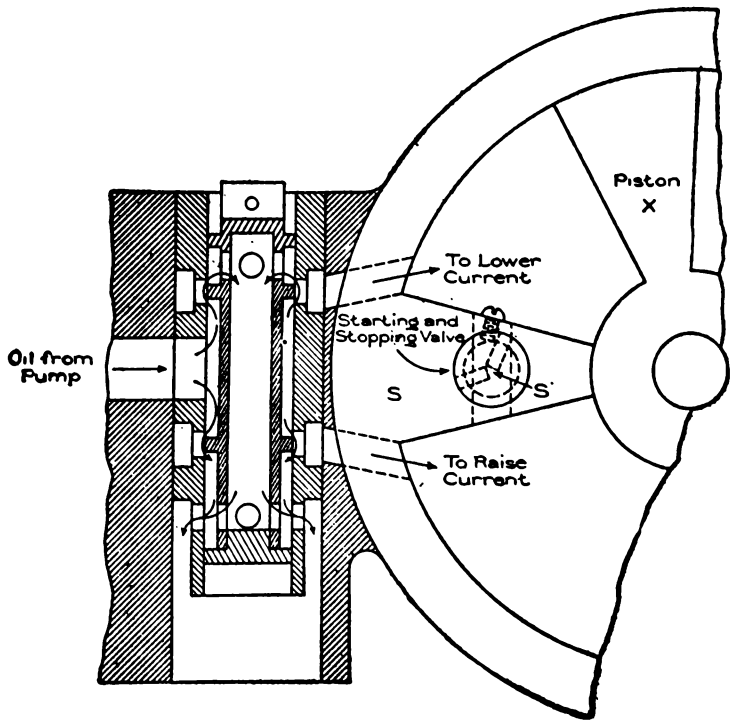

Fig. 3746.

and grit are thoroughly removed. The oil may be drawn off by unscrewing the cap bolt at the bottom of the oil box.

Special care has been taken to provide a good fitting cover for the oil box, so as to prevent sand and dirt from getting into the oil when the commutator is cleaned. The cover must always be kept on.

In general, Brush machines with Form 2 regulators are started as described, but the following additional instructions should be noted:

Having correctly adjusted the regulator for the desired current, as previously described, the starting valve handle S^1, Figs. 3745 and 3746, should be turned counter clockwise when the machine is running without load. This handle operates a valve which

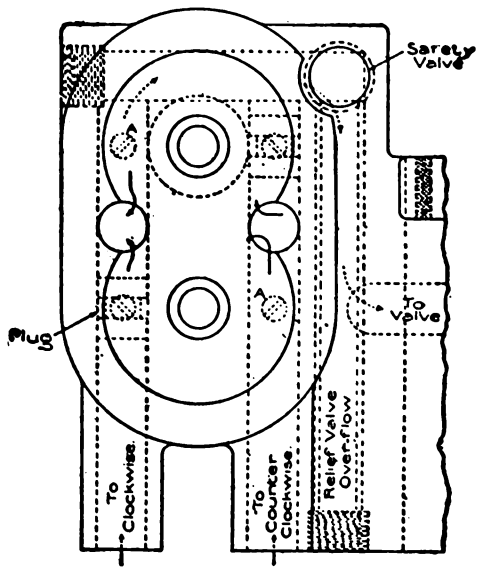

Fig. 3747.

connects both sides of the circular cylinder, thereby giving a free flow of oil between the two sides, and preventing the operation of the piston and relieving the pump from any undue load.

To put the machine in operation, the valve should be gradually thrown around clockwise, cutting off the flow of oil from the two sides of the cylinder after the switches have been opened. This valve may also be used to throw the regulator out of operation.

USEFUL TABLES.

REQUIREMENTS FOR OPERATING ELECTRIC LIGHTS.

Number of Lamps.	Amperes of Current. (Incandescent Light Circuit.)				Size of Copper Wire for Incandescent Lamps.				Volts. ("Arc" Light Circuit.)	
	Incandescent Lamps.		"Arc" Lamps. (2,000-Candle.)		50-Volt Lamps.		110-Volt Lamps.			
	50-Volt.	110-Volt.	50-Volt.	110-Volt.	American Gauge.	Diameter in .001 Inch.	American Gauge.	Diameter in .001 Inch.	1,200-Candle Lamp. (6.8 Amp.)	2,000-Candle Lamp. (9.6 Amp.)
1	1.1	0.5	9	5.5	20	.032	22	.025	50	45
2	2.2	1.0	18	11.0	17	.045	20	.032	100	90
3	3.3	1.5	27	16.5	16	.051	18	.040	150	135
4	4.4	2.0	36	22.0	15	.057	17	.045	200	180
5	5.5	2.5	45	27.5	14	.064	15	.057	250	225
10	11.0	5.0	90	55.0	11	.091	14	.064	500	450
15	16.5	7.5	135	82.5	9	.114	13	.072	750	675
20	22.0	10.0	180	110.0	8	.129	11	.091	1000	900
25	27.5	12.5	225	137.5	7	.144	10	.102	1250	1125
50	55.0	25.0	450	275.0	4	.204	7	.144	2500	2250
75	82.5	37.5	675	412.5	2	.258	5	.182	3750	3375
100	110.0	50.0	900	550.0	1	.289	4	.204	5000	4500

NOTE.—The sizes of wires apply only for a distance of fifty feet in case of 50-volt lamps and 100 feet in case of 110-volt lamps. For greater distances, double the cross-section of the wire each time the distance doubles.

RESISTANCE OF WIRE.

(Extract from "Standard Wiring for Electric Light and Power." By permission of the author: H. C. Cushing, Jr., A.I.E.E.)

Gauge.	Diameter in .001 Inch.			Pounds in One Mile.			Resistance in Ohms per Mile.		
	Iron W. G.	Copper.		Iron Galvanized.	Copper.		Iron Galvanized.	Copper. (60° Fahr.)	
		B. & S.	Old B.W.G.		B. & S.	Old B.W.G.		B. & S.	Old B.W.G.
1	.304	.289	.300	1278	1328	1438	4.12	.66	.61
2	.288	.258	.284	1145	1069	1289	4.59	.81	.68
3	.264	.229	.259	954	835	1072	5.51	1.04	.81
4	.243	.204	.238	807	662	905	6.50	1.31	.96
5	.225	.182	.220	691	526	774	7.58	1.65	1.13
6	.207	.162	.203	590	417	659	8.70	2.08	1.32
7	.185	.144	.180	467	330	518	11.15	2.63	1.98
8	.169	.129	.165	394	262	435	13.14	3.32	2.00
9	.152	.114	.148	319	208	350	16.20	4.13	2.49
10	.138	.102	.134	363	165	287	19.35	5.27	3.04
11	.124	.091	.120	213	131	230	24.05	6.63	3.79
12	.112	.081	.109	175	103	190	28.85	8.44	4.59
13	.099	.072	.095	133	82	144	38.41	10.6	6.04
14	.086	.064	.083	103	65	110	47.82	13.4	7.91
15	.....	.057	.072	.....	51	83	.....	16.8	10.5
16	.....	.051	.065	.....	41	67	.....	21.2	12.9
17	.....	.045	.058	.....	32	54	.....	26.7	16.2
18	.....	.040	.049	.....	26	38	.....	33 7	22.7
19	.....	.035	.042	.....	20	28	.....	43.5	30.9
20	.....	.032	.035	.....	16	20	.....	53.6	44.5

CURRENT CAPACITY OF COPPER WIRE.

(American Gauge.)

Gauge Number.	Diameter in Inches.	Approximate Weight of Insulated Wire per 1,000 ft. in Pounds.	Safe Carrying Capacity in Amperes.	Gauge Number.	Diameter in Inches.	Approximate Weight of Insulated Wire per 1,000 ft. in Pounds.	Safe Carrying Capacity in Amperes.
0000	.460	.....	300	9	.1144	56	19
000	.4096	.....	240	10	.1019	47¼	15
00	.3648	458	190	11	.0907	39¼	12
0	.3249	356	150	12	.0808	33¾	9
1	.2893	299	120	14	.0641	24	6
2	.2576	243	95	16	.0508	16½	4
3	.2294	203	75	18	.0403	13¼	2
4	.2043	168	60	20	.0319	11½	1
5	.1819	118	50	22	.0253	...	0.75
6	.1620	107	37				
7	.1443	83	30				
8	.1285	70	25				

TABLE OF DIMENSIONS OF STANDARD MOTORS.

H. P.	Floor Space.	Height.	Weight in Lbs.		Pulley.			Rated Speed.	
			Net.	Shipping.	Diam.	Face.	Bore.	Rev. per min.	Belt speed per min.
¼	16 1/16" x 16"	15"	90	130	3½"	2"	½"	2100	1924
½	21 5/16" x 16 7/16"	16¼"	120	170	3½"	2½"	⅝"	2100	1924
1	24¼" x 24¼"	24"	270	330	4"	3"	⅝"	1800	1884
2½	33" x 28 11/16"	31⅛"	550	655	7½"	3"	⅞"	1475	2895
5	38 11/16" x 32⅝"	35⅛"	830	1035	8"	4"	1⅛"	1385	2903
7½	44⅛" x 33½"	38⅝"	1090	1320	8½"	5"	1¼"	1315	2924
10	48⅝" x 33¾"	42⅝"	1470	1765	9"	6"	1½"	1225	2885
15	57" x 48"	46⅞"	2130	2565	11¼"	8"	1⅞"	1150	3385
20	65 13/16" x 50¾"	50¾"	2880	3075	12"	9"	2⅛"	1085	3407
25	68 5/16" x 52¼"	54"	3570	3970	13"	10"	2⅜"	990	3367
30	73½" x 53½"	56⅞"	4340	4810	14"	11"	2¾"	925	3388
40	83 9/16" x 58"	66⅝"	6800	7770	17"	12"	3"	765	3402
50	92½" x 62⅝"	75"	9790	10590	24"	13"	3¼"	530	3328
80	105 1/16" x 68⅝"	82⅜"	16200	17500	26"	16"	3¾"	430	2927
150	118⅝" x 89½"	93"	31790	34700	44"	21"	5½"	360	4147

APPENDICES

APPENDIX—PART I.

TEST QUESTIONS FOR ENGINEERS.

AN efficient engineer must certainly be able to determine any practical question that may arise in the management, not only of his engine and boiler, but also in that of such shafting, pulleys, gear wheels, etc., as may constitute the driving gear connected with the engine.

A very moderate examination of an engineer (whether to test his suitability for employment or for promotion) should therefore include questions tending to determine his capability to give such directions as may be necessary when the engine or shafting breaks down, or when alterations are to be made and he is consulted with reference to them. The following questions have been framed with a view to include such information as a first-class engineer, and even an assistant or night engineer, may be expected to possess, and a large proportion of these questions have been taken from actual engineers' examinations in various parts of the country.

In many cases engineers of manufactories are required to make, as far as possible, their own repairs and sometimes indeed also the repairs to the machinery the engine drives, but to give questions covering this ground would be to refer the reader to nearly every page in the two volumes, which is manifestly impracticable.

Matching gear wheels.—Suppose you were running a hoisting engine whose pinion had 15 teeth, driving a wheel with 150 teeth in it; if the pinion had teeth with radial flanks, what orders would you send to get another wheel that would work with the pair?—For answer, see Volume I., page 15.

Radial flanks.—If a pinion has radial flanks what information does that give to the engineer if at any time he requires to order another wheel to work with it? I. 15.

Teeth of gear wheels.—What is the difference between an epicycloidal tooth and an involute tooth of a gear wheel? I. 8, 13.

Ordering bevel gears.—Two lines of shafting are to be connected by a pair of bevel gears and one is to run twice as fast as the other; how would you find the bevel of the wheels so as to be able to tell the maker what was wanted, and what dimensions would you give, leaving the pitch and the shape of the teeth out of the question? I. 22.

Ordering taps.—Suppose you were ordering a set of taps for use in the engine room, what precautions would you be obliged to take as to the shape of the thread in order to get proper taps? I. 85.

Fitting a nut.—Will a nut having a United States standard thread fit a bolt having a common V thread, both threads having the same pitch and diameter, and how could you tell one bolt from the other? I. 85.

Curing a pounding cam.—Suppose some part of the machinery driven by an engine had a cam motion with a small roller which hammered and pounded on the cam, how would you cure the defect? I. 83.

Ordering a new spur wheel.—Suppose a spur wheel broke and you wanted to give the diameter for a new one, where would you measure the diameter of the old one? I. 1.

Comparing screw threads.—What is the difference between the common V thread and the United States standard thread? I. 85.

Using two set screws.—When two set screws are placed in a hub how should they be located? I. 116.

Best lathe tool.—What is the most useful turning tool for a hand lathe, such as is sometimes provided for an engineer to make repairs with? I. 331.

Fitting a crank pin.—How would you proceed to put in by a contraction fit a crank pin, the crank being on the engine? I. 366.

Increasing strength of teeth.—Suppose you had to order a new pair of wheels to replace a pair whose teeth frequently broke, what alterations in the dimensions of the wheels would you make so as to get stronger teeth in wheels of the same diameter? I. 65.

Wear of a cam roller.—If an engine had a valve motion worked by a parallel roller in a parallel cam groove, would the roller wear out quick, and why? I. 84.

Altering the speed of a shaft.—Do a pair of mitre wheels alter the speeds of the shaft they drive or not? I. 1.

Pening.—What is pening and what sort of hammer is used for that kind of work? II., 72.

Riveting a crank pin.—For riveting a crank pin what shape should the pene or pane of the hammer be? II. 73.

Face of a cold chisel.—What is the proper shape for the face of a cold chisel? II. 73.

Key bearing.—What is the effect upon a wheel if its key bears upon opposite corners? II. 107.

Fitting a key.—Should a key be driven lightly or not when fitting it, and why? II. 106.

Removing keys.—When a key has rusted into a through keyway, what precautions should be taken in driving it out? Describe the use of reverse keys to remove a plug. Volume I., page 116.

Chucking a crank.—How should a crank be chucked in order to prevent the crank pin from being out of true, and the engine from beating and pounding? I. 247.

Chucking a cross-head.—How should a cross-head be chucked so as to have its piston rod and wrist pin at a true right angle? I. 252.

Length of drill edges.—Why should both edges of a drill be exactly equal in length and of equal angle? I. 277.

Boring bar edges.—Should a boring bar for an engine cylinder have one, two, three or four cutters? I. 289.

Spiral spring.—Give a method of making a spiral spring. I. 329.

Expansion fit.—What is meant by an expansion or a contraction fit, say for an engine crank pin? I. 366.

Fitting brasses.—Suppose the joint faces of a pair of brasses are not square with the sides of the box or strap in which the brasses fit, what will the effect be when the brasses are locked tight together by the key? II. 125.

Wear of brasses.—When an engineer is taking up the wear of connecting rod brasses, what must he do to keep the rod of the proper length? II. 124–127.

Case hardening.—Describe the simplest method of case hardening. II. 128.

Fitting pillar block brasses.—State the proper order of procedure in fitting in a new pair of main bearing or pillar block brasses for an engine. II. 130.

Driving brasses.—What will be the effect of driving a brass in and out with a hammer and without a block of wood to strike on? II. 72 and 132.

Originating a true plane.—How is a true plane or flat surface originated? II. 133.

Cover joint.—What is the best form of joint for an engine cylinder cover? II. 137.

Grinding a cover.—How must a cylinder cover be moved when grinding it? II. 137.

Appearance of a joint.—What is the appearance of a finished ground joint? II. 137.

Grade of emery.—About what grade of emery would you use to make a ground joint? II. 137.

Best heat joint.—What is the best kind of joint to withstand great heat or flame? II. 138.

Best water joint.—What are the best kinds of joints for withstanding water pressure? II. 138.

Fitting a flange.—In fitting a flange to a boiler what part of the flange face should bed most? II. 140.

Rust joint.—How are rust joints made? II. 140.

Leaky plug.—How would you test the fit of a leaky plug in a cock? II. 144.

Well-ground plug.—What is the appearance of a well-ground plug? II. 145.

Quick brass fitting.—Describe the quickest method of fitting a new brass or bearing box to its journal. II. 147.

Babbitt bearing.—What is the principal advantage of a Babbitted bearing? II. 156.

Adjusting guide bars.—What two essential points are there in adjusting the bottom guide bars of an engine? Volume II., page 162.

Setting guide bars.—Describe roughly the method employed to set guide bars by means of a stretched line or cord? II. 163.

Pounding journals.—What are the two principal causes of the beating or pounding of the journals of an engine? II. 164.

Locating a pound.—How may the location of a pound be discovered? II. 164.

Cause of pounding.—What is the ordinary cause of beating and pounding in an engine? II. 164.

Wearing down.—What is the defect induced by letting the parts of an engine wear down to a bearing? II. 166.

Testing alignment.—What are the tests that should be made to find out what part of an engine is out of line? II. 166.

Best test for alignment.—What part of an engine can be used to form the best test of alignment to cure pounding? II. 167.

Connecting rod alignment.—State in a general way the method of using the connecting rod to place the engine in line, and thus prevent beating and pounding. II. 167 to 172.

Difficult alignment.—What error in the alignment of the parts of an engine is the most difficult to discover? II. 170.

Alignment of crank pin.—What is the general cause of a crank pin being out of line with the crank shaft? II. 170.

Pound at quarter stroke.—When a pound occurs in an engine at the time the crank pin is at quarter stroke, or thereabouts, where would you look for the cause? II. 170 to 172.

Setting a slide valve.—What are the three objects, either of which a slide valve may be so set as to accomplish? II. 173.

Essentials of slide valve setting.—What are the two operations essential to the setting of a slide valve? II. 173.

Squaring a valve.—Why is the common process of squaring the valve an improper proceeding? II. 173, 394.

Crank pin on dead centre.—How would you proceed to put an engine crank pin exactly on the dead centre for setting the valve? II. 173, 426.

Direction of movement.—What are the considerations that determine in which direction the engine should be moved when setting the valve? II. 173, 174, 426.

Setting eccentrics.—What tools are used to set eccentrics upon shafts before the shafts are upon the engine? II. 175.

Patching a break.—In patching a broken beam or frame, how may the bolts be made to serve to act as keys closing the crack? II. 178.

Erecting shafting.—Give a general or rough description of the method of adjusting or aligning or erecting shafting. II. 184 to 186.

Kinds of shafting.—What is the difference between bright and black shafting? II. 187.

Fitting a pulley.—If you had a pulley whose bore was $1\frac{15}{16}$ inches, what diameter of bright shafting would you order for it? II. 187.

Locating collars.—What is the best location for the collars that prevent end motion on a line shaft? II. 189.

Ball and socket hangers.—What are the advantages of hangers having a ball and socket adjustment? II. 192.

Shaft couplings.—What four objects should the couplings for line shafts accomplish? II. 194.

Universal joint.—What object does a universal joint accomplish? II. 199.

Crowning a pulley.—What is the object of crowning a pulley? II. 201.

Pulley balance.—Why should a pulley be balanced? What is a running and what a standing balance for a pulley? At what speed should a running balance be made? II. 202.

Size of pulleys.—If a shaft makes 150 revolutions per minute, and it is required to drive a pulley on a machine at 600 revolutions, what proportions must the diameter of the two pulleys have, and what determines the diameters of the pulleys? II. 205, 206.

Testing belts.—What appearance in leather belting indicates that it was cut from the spongy shoulder? II. 208.

Stronger side of belts.—Which is the stronger side of leather, the smooth or grain side or the rough or flesh side? II. 208.

Placing a belt tightener.—Should a belt tightener be placed on the tight or slack side of a belt? II. 210.

Crossed vs. open belt.—Which will transmit more power, an open or a crossed belt, and why? II. 210.

Crossed belt.—What are the objections to a crossed belt? II. 210.

Shortening a round belt.—Can a round twisted belt be shortened without removing either the hook or the eye and how? II. 216.

Wide belt.—How would you get a very wide belt on a pulley? II. 217.

Strain on boiler joint.—How would you calculate the amount of stress there is upon the riveted joint of a boiler? Volume II., page 382.

Shearing strain.—What is meant by the terms, shearing, tearing, and crushing strains of a steam boiler? II. 383.

Lapped and butt joints.—How does a lapped joint differ from a butt joint or seam in a boiler? II. 384.

Chain and zigzag riveting.—How does a chain riveted joint differ from a zigzag riveted joint? II. 384.

Butt joint.—What are the advantages of the butt joint? II. 384-385.

Margin for holes.—How would you find the proper distance the rivet holes should be from the edge of the plate in a boiler seam? II. 385.

Spacing rows of rivets.—How would you find the distance apart for the rows of rivet holes in a double riveted joint? II. 385.

High percentage joint.—What is mean by a "high percentage" riveted joint? II. 385.

Single and double shear.—What is meant by a rivet being in single shear or double shear? II. 385.

Allowance for shear.—How much additional allowance is made in the shearing strength of a rivet in double shear over that of the same rivet if in single shear? II. 392.

Taking charge of a boiler.—What is the first thing you would do in taking charge of a boiler? II. 400, 432.

First inspection.—What part of the boiler would you inspect first? II. 400.

Safety valve defect.—To what defect is a safety valve most liable? II. 400, 432.

Water supply.—How much water should there be in the boiler when the fire is lit? II. 400.

Reliability of gauge glass.—Is a gauge glass always reliable for showing the height of water in the boiler? II. 400, 434.

Testing gauge glass.—What would you do to find out if the gauge glass was showing the correct water level? II. 400.

Condensation in boiler.—What is likely to happen if the steam condenses in the boiler without any of the cocks being open? II. 400, 432.

Cleaning a boiler.—What parts of the boiler would you clean before lighting the fire? II. 400.

Laying a fire.—How would you lay the fire? II. 400.

Quick combustion.—Does bituminous (soft) or anthracite (hard) coal light more easily? II. 400.

First coal.—How soon would you put coal on after the fire is lit? How deep would you make the first layer of coal? II. 400, 433.

Amount of coal.—How much coal would you put on the fire at a time? II. 400, 433.

Even heat.—How can an even temperature be kept up in the fire box? Why is it necessary to keep an even temperature in the fire box? II. 400, 402.

Shaking grate.—What is the advantage possessed by shaking grate bars? II. 401.

Before cleaning a fire.—What preparations would you make before cleaning the fire? II. 401.

Fire tools and their uses.—What tools are used in cleaning a fire? And what is the use of each? II. 401.

Draught while firing.—How should the draught be regulated while the fire is being cleaned? II. 401.

Temporary interruption.—What should be done to prevent blowing off through the safety valve when the engine is stopped and no steam is being taken from the boiler? II. 401.

Blue flame.—What does blue flame in the fire box indicate? II. 401.

Water supply at night.—How much water would you have in a boiler when leaving it for all night? II. 401.

Fire at night.—How would you leave the fire for the night? II. 401.

Banking.—What is banking a fire? Give a safe method of banking a fire. II. 401, 433.

Dampers at night.—How should the dampers be left when the fire is banked? II. 401.

Safety valve at night.—How would you set the safety valve for a banked fire? II. 401.

Opening a banked fire.—What is the first thing to do in starting up a banked fire? II. 401, 433.

Regulating boiler feed.—How would you regulate the boiler feed? II. 401.

Regulating a pump.—How can a pump be regulated so as to be kept pumping without surcharging the boiler? Volume II., page 401.

Even boiler injection.—Can a continuous feed be maintained if injectors are used? II. 402.

Stuck valve.—How may a stuck valve or a check valve be released? II. 402.

Hot feed water.—What would you do if the feed water got so hot that the pump worked imperfectly or not at all? II. 402.

Scale.—What causes scale to form in the boiler and what effect does scale have on the boiler? II. 402.

Preventing scale.—What are the principal methods employed to prevent the formation of scale in the boiler? II. 402.

Horizontal heater.—What advantage does a horizontal heater possess? II. 402.

Dirty gauge glass.—What should be done to the gauge glass if the feed water is dirty? How many times a day should the gauge be blown out? II. 402.

Priming.—What is the priming or foaming of the water in a boiler? What are the known causes of priming? Why is priming wasteful? Can blowing off at the safety valve cause priming? What are other causes of priming? How can priming be detected? What would you do to stop priming? What would you do to prevent priming? What parts of the engine would you attend to if the boiler primes? II. 402.

Low water.—What would you do if the water got dangerously low in the boiler? In such a case how would you regulate the dampers? What do you consider dangerously low? What is blowing down a boiler? II. 402.

Cleaning a boiler.—How often would you clean a boiler? II. 403.

Water falling.—What would you suppose was going wrong if the pump was kept going and the water still fell in the boiler? II. 402

Empty pump.—What causes a pump to fail? II. 402.

Blowing down.—How much would you blow down a boiler? How low should the pressure get before the water is let out? What would be the result if the boiler was blown off under a high pressure? What would you do after the water is all out of the boiler? II. 403.

Special examination.—What parts would you pay special attention to in examining the boiler after cleaning it? II. 403.

Hammer test.—What does the "hammer test" consist of? II. 403.

Washing and scaling.—What determines the periods at which a boiler should be washed out and scaled? II. 403.

Regulating dampers.—How would you regulate the dampers when letting the fire out? II. 403.

Naming the parts.—Name all the parts of a simple or plain D slide-valve engine, beginning with the cylinder. II. 404.

Dividing the parts.—Into what three divisions may the parts of a plain slide-valve engine be divided? II. 404.

Defining clearance.—What is the meaning of the word "clearance" as applied to an engine cylinder? II. 404.

Finding equal clearance.—How would you proceed to find if the clearance in the cylinder was equal at each end? II. 404, 436.

Parts of valve motion.—What parts constitute the valve motion or valve gear? II. 404.

The driving parts.—What parts constitute the driving or power-transmitting mechanism? II. 404.

Lubricating attachments.—Name the attachments used upon an engine cylinder to lubricate the piston and valves. II. 405.

Pet cock.—What is the difference between a cylinder pet cock and a cylinder relief valve? II. 405.

Relief valves.—What are cylinder relief valves used for? II. 405.

Quick steam admission.—Which gives the quickest steam admission, a long and narrow or a wide and short steam port, both having the same area? II. 405.

Placing the piston-ring split.—At what part of the cylinder bore should the split of a piston-ring be placed? II. 406.

Fitting a piston ring.—How tight should a piston ring fit to the cylinder bore? II. 406.

Testing steam tightness.—How would you test the steam tightness of a piston? II. 406.

Jacketed.—What is a jacketed cylinder? II. 406.

Valve gear.—What is a releasing valve gear? What is a positive valve gear? Volume II., page 406.

Packing a stuffing box.—About how full of packing would you fill a stuffing box for a piston gland? II. 407.

Connecting rods.—What are the two principal kinds of connecting rods? What is meant by the angularity of a connecting rod? II. 407.

Oiling guide bars.—Which guide bar is the most difficult to oil, the top or the bottom one? II. 407.

Effect of angularity.—What effect does the angularity of the connecting rod have on the piston motion? Is this effect increased or diminished by shortening the connecting rod? II. 407.

Crank at full power.—When the crank is at its point of full power, is the piston in the middle of the cylinder? Is it nearer to the crank-end or the head-end of the cylinder? II. 407.

Piston motion irregular.—What causes the piston to have irregular motion? II. 407.

Live steam period.—What constitutes the live steam period of a position? II. 408.

Cut-off.—What is the point of cut-off? II. 407.—What is a separate cut-off valve, and what event does it control in the supply of the steam to the cylinder? How is the point of cut-off varied when a cut-off valve is used? II. 410.

Working expansively.—What causes the steam to be worked expansively in an engine cylinder? II. 434.

Follower.—What is a piston follower? II. 406.

Valve lead.—What is the lead of a valve? II. 408.

Valve lap.—What is the lap of a valve? II. 408.

Admission.—What is the point of admission? II. 408.

Cushioning.—At what point in the valve travel does cushioning begin? II. 408.

Release and compression.—What are the points of release and of compression? II. 408.

Double-ported valve.—What is a double-ported valve? II. 409.

Valves.—What is a griddle valve? What is a balanced valve? II. 409.—What is a piston valve? II. 410.

Slide and piston valves.—Is there any difference between the action of a plain slide valve and a piston valve if both have the same amount of lap, lead, and travel? II. 410.

Cut-off diagram.—Make a diagram to give the dimensions of a slide valve, to cut off at $\frac{3}{4}$ stroke, the valve travel being 4 inches. II. 412.

Reversing an engine.—What is the ordinary means provided for reversing an engine? II. 415.

Full gear.—What is the meaning of the term full gear, with regard to a link motion? II. 415.

Third use of link motion.—What does a link motion accomplish besides enabling the engine to run in either direction? II. 415.

Slide valve for link motion.—What are the two operations to be performed in setting the slide valve of an engine having a link motion? Describe these two operations. II. 415.

Governors.—What is a throttling governor? What is an isochronal governor? What is a dancing governor? II. 416.

Forward.—What is full gear forward? II. 415.

Backward.—What is full gear backward? II. 415.

Starting.—How would you proceed to start a plain slide valve? II. 416, 432.

Crank position.—What is the best position for the crank to be in to start the engine, and why is it the best position? II. 416.

Taking Charge.—What is the first thing you would do in taking charge of an engine? II. 417.

Length of connecting rod.—How would you find out if the connecting rod was the right length to give an equal amount of clearance at each end of the cylinder? II. 417, 436.

Order of examination.—In what order should a thorough examination of the engine be made? II. 417.

Least examination.—What would constitute the least permissible examination of an engine, with a due regard to safety? II. 417.

Thorough examination.—What would constitute a complete examination of a plain slide-valve engine? In what order should such an examination be made? II. 417.

Quick examination.—What examination should an engineer make of a plain slide-valve engine, if called upon to start it as quickly as possible without knowing its condition? II. 417.

Taking a lead.—How would you take a lead for adjusting the fit of a bearing to its journal? II. 418.

Set of slide valve.—How would you test whether the slide valve was set properly? II. 418.

Squaring a valve.—Is it proper to square a plain slide valve? Volume II., page 418.

Lead affected by wear.—How does the wear of the parts affect the lead in vertical engines? II. 418.

Heating of crank-shaft.—What would you do if the crank-shaft bearings began to heat? II. 418.

Hot crank-pins.—What are the principal causes of hot crank-pins? II. 418.

Heating.—What part of the engine is the most likely to get hot from the friction of the fit? II. 418.

Use of lead.—What is a lead used for in adjusting the fit of a brass to its journal? II. 418.

Fit of top brass.—When a liner is used between the two brasses, what does the fit of the top brass depend upon? II. 418.

Oiling.—In oiling the engine, what precaution would you take to prevent the journals from heating? II. 433.

Cold weather.—What is liable to happen to an engine that is used out of doors in cold weather? II. 418.

Leaky throttle valve.—What damage might a leaky throttle valve do, and how would you prevent it? II. 418.

Leaky check valve.—What damage may a leaky check valve do, and how would you prevent it? II. 419.

Freezing in the pump.—How would you prevent the water from freezing in the pump? II. 419.

Freezing oil.—How would you prevent the oil from freezing? II. 419.

Thawing oil.—How would you thaw frozen oil? II. 419.

Setting a portable engine.—How should a portable engine stand when it is at work, and why should it stand so? II. 419.

Natural supply of water.—What precautions would you take when feed water is drawn from a stream, or other natural source of supply? II. 419.

Pumps.—Into what class may pumps be divided? What is a force pump? What is a piston pump? What is a single-acting pump? What is a double-acting pump? II. 419.

"Suction."—What causes the flow of water up the suction pipe of a pump? How high can a pump lift water, or cause it to lift or rise? II. 420.

Regulating a pump.—How can the quantity of water a pump will deliver be regulated? II. 420.

Pump valves.—What is the check valve of a pump? What is the foot valve of a pump? II. 420.

Speed of pumping.—What is the highest speed at which a pump should run? What is the consequence if a pump runs too fast? II. 420.

Locating the air chamber.—Where should the air chamber be placed on a pump, and what is its use? II. 420.

Belt pump.—What is the advantage possessed by a belt pump? II. 420.

Starting bar.—What is a starting bar, and what is it used for? II. 421.

Link sketch.—Make a rough sketch of a locomotive link motion. II. 424.

Link gear and eccentric.—Does a link motion when in full gear operate the valve much different to what a simple eccentric motion would do? II. 425.

Exchanging eccentric rods.—If the forward eccentric rod was to break, could the backward eccentric be utilized to run the engine forward? If so, how? II. 425.

Broken reach rod.—How would you hold the tumbling shaft if the reach rod broke? II. 425.

Eccentric and crank motions.—Does the acting eccentric lead or follow the crank when the link is in full gear? II. 425.

Setting a slide valve.—In what position would you place the link motion when the slide valve is to be set? II. 426.

Length of eccentric rod.—What determines the length of the eccentric rods when setting the slide valve? II. 426.

Setting an Allen valve.—What difference is there between setting a common slide valve and another (an Allen) valve? II. 427.

Injector.—What is an injector? II. 427.

Before firing.—What should be done before laying the fire? II. 432.

Kindling the fire.—How long should the wood burn before putting on coal? II. 432.

Oiling.—What points require examination when oiling the engine? II. 433.

After oiling.—What points would you move after having oiled the engine? II. 433.

Using tallow.—Where would you place tallow in oiling the engine, and for what purpose would you use it? Volume II., page 433.

Fire too hot.—What would you do if steam was rising too rapidly? II. 433.

Link position.—Where should the link be when starting the engine? II. 434.

Even steam pressure.—Why should the steam pressure be kept up, and what difference does it make in the consumption of the fuel? II. 434.

Quick steaming.—Can steam be made quickest with a large or with a small quantity of water in the boiler? II. 434.

Best boiler feed.—Which is better, a constant or an intermittent boiler feed? II. 434.

Best firing.—Which is better, heavy firing at long intervals or light and frequent firing, and why? II. 434.

Broken cylinder cover.—What would you do if the cylinder cover got knocked out while on the road? II. 434.

Hot piston rod.—What would you do if the piston rod got hot? II. 435.

Broken piston rod.—What if the piston rod broke? II. 435.

Broken crank pin.—What if the crank pin broke? II. 435.

Tire off.—What if a wheel tire came off? II. 435.

Driving wheel off.—What if a driving wheel came off? II. 435.

Broken lifting link.—What if a lifting link or saddle-pin broke? II. 435.

Slipping eccentric.—What if an eccentric slipped? II. 435.

Hot axle-box.—What if an axle-box got hot? II. 435.

Broken spring hanger.—What if a spring or spring hanger broke? II. 435.

Bursted tube.—What if a tube bursted? II. 435.

Fitting axle-box wedges.—In what position should the engine be placed when the axle-box wedges are to be adjusted for fit to the pedestals? II. 436.

Changing clearance.—What is it that, as the engine wears, tends to alter the amount of clearance? II. 436.

Crank-pin centres.—How would you get the distance from centre to centre of the crank-pins when adjusting the axle-boxes and the side rods, parallel rods, or coupling rods, as they are promiscuously termed? II. 436.

Adjusting shoes.—In what position would you place the crank when adjusting the shoes or wedges of the axle-boxes? Why is this adjustment important? II. 436.

Force, pressure and power.—What is the difference between force or pressure and power? II. 437.

Increase of power.—Can we increase a given amount of power by means of mechanical appliances? II. 437, 438.

Speed vs. power.—Is a gain in speed a loss in power? II. 437.

Lever.—Explain the principal of the lever. II. 437.

Elements of power.—What are the three elements composing power? II. 439.

Horse-power.—What is a horse-power as applied to steam-engine calculations? How would you calculate the horse-power of a steam engine? II. 439.—Give a method of testing the effective horse-power of an engine. II. 440.

Safety-valve problem.—A safety valve is three inches in diameter; the lever is twenty-eight inches long from the point of suspension of the weight to the pivoted end of the lever; the valve pin is four inches from the pivot; the weight is twenty pounds. What is the greatest pressure of steam the valve will hold, leaving the weight of the valve and of the lever out of the question? II. 441.

Thermal unit.—What is the heat unit or thermal unit? II. 442.

Latent heat.—Is all the heat in steam or water shown by a thermometer? What is the latent heat of water? What is the latent heat of steam? II. 442.

Sensible heat.—What is the sensible heat of steam? II. 442.

Total heat.—What is the total heat of steam? II. 442.

Heaviest water.—At what temperature is water at its greatest density? What is the weight of a cubic foot of water when at its maximum density? II. 442.

Heat of boiling water.—What determines the temperature at which water will boil? II. 442.

Heat of steam.—Can steam be made hotter than the water while they are in contact? What is superheated steam? II. 442.

Absolute pressure.—What is meant by the absolute pressure of steam? II. 443, 448.

Dry steam.—What is meant by dry steam? II. 443.

Weight of steam.—Is there any difference between the weight of water and that of the steam it will evaporate into? II. 443.

A perfect gas.—What is Mariotte's law, or Boyle's law? Is steam a perfect gas? Volume II., page 443.

Joule's equivalent.—What is meant by the conversion of heat into work? What is Joule's equivalent? What is the mechanical equivalent of heat? II. 443.

Indicator.—What is a steam-engine indicator? II. 445.—How are indicators attached to an engine? II. 448.

Indicator diagram.—What are the names of the lines of a diagram? Why is a theoretical diagram not correct? II. 446.—What difference is there between the lines of a diagram of a condensing and those of a non-condensing engine? II. 447.—How is the expansion curve of a diagram tested? II. 449.

Barometer.—What is a barometer, and for what purpose is it used in connection with engine diagrams? II. 447.

Horse-power by diagram.—How do you calculate the horse-power of a steam engine from an indicator diagram? II. 450.

Diagram vs. diagram.—What difference is there between the diagram taken from one end and that taken from the other? II. 451.

Consumption of steam by diagram.—How would you calculate the consumption of steam or water of an engine from an indicator diagram? II. 452.

Steam line.—What would a fall in the steam line of a diagram indicate? II. 453.

Expansion curve.—If the expansion curve is above the true expansion curve, what defect in the engine does that indicate? If the expansion curve falls too low, what does i indicate? II. 453.

Valve lead by diagram.—How would insufficient valve lead be shown on a diagram? II. 453.

Excessive lead.—How is excessive lead shown on a diagram? II. 453.

Automatic cut-off.—What is an automatic cut-off engine? What are the principal forms of automatic cut-off engines? II. 455.

Releasing valve governor.—What kind of governors do engines with releasing valves have? II. 455.

Corliss engine valves.—How many valves does a Corliss engine have? Explain the action of a Corliss valve gear. II. 455.

Crab claw.—What duty does the latch-link or crab claw of a Corliss valve gear perform? II. 455.

Valve trip.—What means are employed in a Corliss engine to trip the admission valve? II. 455, 456.

Point of cut-off.—What determines the point of cut-off in a Corliss engine, and how does it do so? II. 456.

Valve closing.—What closes the valve in a Corliss engine? II. 456.

Dash-pot.—What is a dash-pot? What enables the dash-pot of a Corliss engine to work noiselessly? II. 456.—How is the amount of air cushion in the Corliss dash-pot regulated? II. 457.

Shape of Corliss valve.—What shape is a Corliss valve, and how far would its lap, as ordinarily constructed, carry the live steam period, leaving the cut-off mechanism out of the question? II. 458.

High-speed engines.—What is meant by the term high-speed engines? II. 459.

Adjusting for load.—What adjustments would you make if the engine had been running a very light load, and required to be adjusted for a heavy load? II. 459.

High-speed governor.—What class of governor is generally used upon high-speed engines? II. 459.

Varying the cut-off.—What is the usual method of varying the point of cut-off on high-speed engines? II. 459.

Wheel governor.—State, in a general way, what a wheel governor consists of. II. 459.

Even valve lead.—Can the valve lead be kept equal when the point of cut-off is varied by shifting the eccentric across the shaft or crank-axle? II. 459.

Marine engine.—What forms of engine are used for marine purposes? II. 466.

Inverted cylinder.—What is an inverted cylinder engine? II. 466.

Receiver.—What is a receiver. II. 466, 485.

Triple expansion.—What is a triple-expansion engine? II. 468.

Condensing engine.—What is a condensing engine? II. 466.

Compound engine.—What is a compound engine? II. 466.

Arranging compound cylinders.—What are the two methods of arranging compound cylinders? II. 468.

Condenser.—What is a surface condenser? II. 47

Hot well.—What is a hot well? II. 472.

Steam condensation.—Describe the means by which the steam is condensed after it is exhausted from the cylinder in a surface condensing engine, and state what becomes of the water of condensation and the injection, circulating, or condensing water. Volume II., page 472.

Condenser tubes.—How are condenser tubes made tight? II. 472.

Blow-through valve.—What is a blow-through valve? II. 472.

Air pumps.—What is a bucket air pump, and is it single or double acting? What is a piston air pump? What is a plunger air pump? What is a trunk air pump? When is a trunk air pump necessary? II. 473.

Air-pump valves.—Are a foot valve and a head valve always necessary to an air pump? II. 473.

Pet cock.—Why are bucket pumps provided with a valve or pet cock? II. 473.

Bilge injection.—What is a bilge injection? What fittings are necessary for a bilge injection? II. 473.

Hot-well temperature.—At what temperature is the water in the hot well usually kept? II. 473.

Use of air chamber.—What is an air vessel or air chamber used on a pump for? II. 473.

Feed escape.—What is a feed relief, or feed escape valve? II. 473.

Checked boiler feed.—What causes may act to stop the boiler feed? II. 473.

Admitting the exhaust.—When the exhaust steam is condensed for boiler-feeding purposes, how soon after the engine has started would you let the exhaust into the feed tank? II. 473.

Ship's side discharge.—What is a ship's side air pump discharge valve? II. 474.

Course of water.—What is the course of the main injection water of a jet condenser? What is the course of the main circulating water of a surface condenser? II. 474.

Surface condensing.—What are the advantages of surface condensing? How are surface condensers cleaned out? II. 474.

Engine-room cocks and valves.—What cocks and valves are there in the engine room of a condensing engine? II. 474.

Donkey engine.—What is a donkey engine? What pipes connect to a donkey engine, and what are their uses? II. 474.

Pipes to the sea.—What are the pipes that lead from or go to the sea? II. 474.

Parts classified.—What parts of a marine engine are generally made of wrought iron, of cast iron, of brass, and what of steel? II. 474.

Use of Babbitt.—What is Babbitt metal or white metal used for? II. 474.

Use of Muntz.—What is Muntz metal used for? II. 474.

Breaking strain.—About what is the breaking strain of wrought iron per square inch of section? II. 474.

Tempering.—How is steel tempered? II. 474, 492–495.

Case hardening.—What is case-hardening? What parts of an engine are usually case-hardened? II. 474.

Forging.—What are the forgeable metals used in engine construction? II. 474.

Welding.—What is welding? II. 474.

Metal expansion.—What metals used in engine construction expand by heat, and what allowances are made in the construction on this account? II. 474.

Composition of iron and steel.—What is the difference in the composition of cast iron and steel? II. 474.

Marine piston.—Describe a marine engine piston. II. 474.

Drain cocks.—What are cylinder drain cocks? II. 474.

Link motion.—What is a link motion? What is a link motion used for? II. 475.

Expansion valve.—What is a separate expansion valve? II. 475.

Top cylinders.—What are the small cylinders on top of the steam chests used for? II. 475.

The throw.—What is the throw of an eccentric? II. 475.

Double beat.—What is a double-beat valve? II. 475.

Expansion joint.—What is an expansion joint? II. 473, 475.

Oil cup.—What is an oil cup? II. 475.

Siphon.—What is a siphon or worsted? II. 475.

Impermeator.—What is a steam lubricator or impermeator? II. 476.

Hand-worked valves.—What are the valves of a marine engine that are worked by hand? Volume II., page 476.

Vacuum gauge.—What is a vacuum gauge? What is a mercury vacuum gauge? II. 476.

Total condenser pressure.—How would you find the total pressure in a condenser? II. 476.

Racing.—What is meant by the racing of an engine? II. 476.

Uniform paddle-wheel revolution.—How may the speed of revolution of single-crank paddle-wheels be made uniform? II. 476.

Paddle-wheel construction.—What is the construction of a common paddle-wheel? What is a radial paddle-wheel? What is a feathering paddle-wheel? II. 477.

Disconnecting engine.—What is a disconnecting paddle engine? II. 477.

Propeller thread.—Where is the thread of a screw propeller measured? II. 477.

Propeller pitch.—What is the pitch of a propeller? II. 477.

L. H. propeller.—What is a left-hand propeller? II. 477.

Thrust bearing.—What is a thrust bearing? II. 477.

Propeller fastening.—How are screw propellers fastened to their shafts? II. 477.

Marine engine pipes.—What are the principal pipes of a marine engine and boiler? II. 477.

Mud box.—What is a mud box? II. 477.

Course of steam.—Describe the course of the steam from the boiler to the hot well. II. 477.

Exposure to cold.—What parts of an engine are exposed to danger in a cold climate? II. 478.

Preventing freezing.—What precautions are necessary to pervent the engine from freezing in cold climates? II. 478.

Failure to start.—Name all the reasons that may cause a marine engine to fail to start when it is expected to do so. II. 478.

Pressure pieces.—Name all the pieces of an engine through which the steam pressure is received and transmitted. II. 478.

Horse-power.—What is the unit or measure of horse-power? What is the meaning of nominal horse-power? II. 478.

Lost Vacuum.—Name all the causes from which the vacuum may become defective or lost. II. 479.

Hot journals.—What are the principal causes of the heating of engine journals? II. 479.

Stays.—What is a boiler stay? What is a gusset stay? What is a tube stay or a stay tube? II. 484.

Stress per square inch.—How much stress is usually allowed per sectional square inch of boiler stay? Volume II., page 484.

Breaking of tubes.—What is the commonest cause of boiler tubes breaking? II. 484.

Split tube.—How is a split tube stopped up? II. 484.

Uptake.—What is the uptake of a marine boiler? What is a wet uptake? II. 485.

Superheater.—What is the superheater of a marine boiler? II. 485.

Fittings.—What fittings are essential to a marine boiler? II. 485.

Safety valves.—What is a dead-weight safety valve? What is a spring-loaded safety valve? What is a lock-up safety valve? II. 485.

Test cocks.—What do the three boiler test cocks show? How are boiler test cocks cleaned? II. 485.

Steam gauges.—What is a gauge glass or water-gauge glass? What is a Bourdon dial gauge? What pressure is shown by a boiler steam gauge? II. 485.

Scum cocks.—How many scum cocks are used in a marine boiler? II. 486.

Sluice valves.—What are sluice valves in steamships? II. 486.

Removing scale.—How is scale removed in boilers? II. 486.

Salinometer.—What is a salinometer? II. 487.

Salt in sea water.—About how much salt does sea water con tain? II. 486.

Division plates.—What are division plates in boilers? II. 487.

Intercepter.—What is the separator or intercepter of a marine boiler? II. 487.

Boiler draft.—What causes the draft in a boiler? II. 487.

Rapid wasting.—Where does the most rapid wasting occur in marine boilers? II. 487.

Coal consumption.—About how much coal is consumed per square foot of grate in marine boilers? II. 487.

Short of coal at sea.—If at sea and short of coal, what course would you pursue in order to save coal and get into port? II. 487.

Boiler relief in extreme danger.—How would you relieve a marine boiler in case of the safety valve being locked down from some accidental cause, the engine also being disabled? II. 487.

Pressure test.—At what pressure should a new boiler be tested? II. 488.

Boiler examination.—State what you would consider a proper examination, inside and out, of a marine boiler that had been in sufficient service to require examining. II. 490.

TEST QUESTIONS FOR OPERATORS OF ELECTRICAL MACHINERY.

IN the foregoing pages we have given descriptions of every kind of electrical machinery and also of the various devices used therewith. In addition, the principles upon which these operate have been explained; but for the purpose of fixing these explanations more firmly upon the mind, we will, in the following, present, in the form of questions and answers, all the important points relating to the subject; and the careful study of these questions will prove of decided value to those who desire to obtain positions where a part of their duty, or the whole of it, would be the care of electrical machinery of some kind. These questions cover about the whole ground that would be gone over by one examining an applicant for such a position.

Q. What is a magnet?

A. A magnet is a device so constructed as to enable us to utilize the force of magnetism.

Q. Are there many different forms of magnets, and if so, how many?

A. There are permanent magnets, electromagnets, and solenoid magnets. A permanent magnet is made of hardened steel, and is called permanent because it retains its magnetism after once being magnetized. An electromagnet is made of the softest iron and is wound with insulated wire. If a current of electricity is passed through this wire the magnetic force is induced, but as soon as the current stops flowing, the magnetism disappears. It is on this account that the name electromagnet is used, for the magnetism is brought into action by the effect of the electric current. A solenoid magnet is composed wholly of wire, which is wound in the form of a coil, and when a current of electricity is passed through it, magnetism is developed. A permanent magnet can be made in the form of a straight bar or any other shape. The most common form is that of a horseshoe, and to this the name of horseshoe magnet is given. An electromagnet can be made in any form desirable. Solenoids can only be made in the form of coils, but can have all the forms into which coils can be shaped. Permanent magnets are very seldom used in electrical machinery, as they are far inferior in strength to electromagnets and solenoids.

Q. What are the ends of magnets called?

A. Poles; one being the positive, or north, and the other the negative, or south, pole.

Q. What is the meaning of the term insulation?

A. Insulation is material that will not conduct electricity, and it is used to confine currents of electricity to certain channels. Thus if we were to wind a wire in the form of a coil, and this were bare wire, the current would jump from one turn to another and not go around the coil; but if the wire is covered with silk or cotton, which will not conduct electricity, then the only way for the current to get out of the wire is to run through it to the opposite end.

Q. What is the object of insulating electromagnets?

A. Electromagnets are insulated so that the electric current will circulate around the iron core, through the wire wound upon it. It is necessary in an electromagnet to insulate the wire so as to confine the current to it, and also to insulate the wire coil, as a whole, from the iron, so as to guard against the current jumping from the wire to the iron.

Q. What would be the effect if the current were to break through the insulation of the wire from one turn of the coil to another, and also what would be the effect if it should break through the insulation between the wire and the iron?

A. In the first case, the effect would be that the current would not pass around the magnet so many times, and, therefore, its magnetizing action would not be any greater than if just so many turns were removed from the coil. In the second case, the effect might be very serious, or it might not. If the current should break through just where it enters the coil, then the effect would be that all the turns of wire would be cut out and the magnet would not be magnetized. If the break should take place at the end of the coil, the effect would be slight; for then the current would have to traverse the whole length of the wire before getting into the iron. Generally, when a current breaks through the insulation, it burns the magnet out, because there is a considerable amount of heat developed by the passage of the current through the insulation.

Q. What is a field magnet?

A. A field magnet is that part of an electric generator or motor that develops the magnetic field in which the armature revolves.

Q. What is an armature?

A. An armature is that part of an electric generator or motor in which an electromotive force is induced.

Q. What is electromotive force?

A. Electromotive force is that force that causes an electric current to flow. Electric currents, however, will not flow except in a closed circuit; therefore, if there is no closed circuit for the electromotive force to act upon, it can only produce a stationary electrical pressure, and this is called electrical potential.

Q. How is an electromotive force induced in an armature?

A. An armature is covered with wire, which is wound upon it in such a manner that if an electromotive force is induced therein the current developed thereby may find its way out to the ends of the coils into which the wire is formed. The field magnet develops the magnetism, and this produces what is called a magnetic field between its poles, and the armature being located in this space is in the magnetic field. If the armature is rotated, the wire upon it cuts through the magnetic field, and by this action an electromotive force is induced in the armature wire. The magnetism of a magnet acts along lines that run from one pole to the other, and these lines are called magnetic lines of force, and on this account when an armature rotates in the space between the poles of a field magnet, it is said that the wires upon it cut through the lines of force, and from this comes the expression that electromotive force is induced by the cutting of lines of force by the armature wires. The armature wires are called conductors.

Q. How is the current generated in the armature wires, or conductors, conveyed outside of the armature so that it may be utilized?

A. This depends upon the kind of machine. In a continuous current generator, the wire is wound in coils, and the ends of these are connected with sections of a drum called a commutator. Upon this commutator brushes or springs rest, and these carry the current outside of the armature. If the machine generates alternating currents, the ends of the armature coils are connected with rings placed upon the armature shaft, and on each ring a brush or spring presses, and through these the current is taken off.

Q. What is the object of a commutator, and how is it made?

A. A commutator is a device used to rectify the current generated in the armature. In any electric generator the current induced in the armature is of the alternating type; that is, it flows during one-half of the revolution in one direction, and during the other half in the opposite direction. By means of the commutator, the current is rectified so that it passes out to the external circuit always flowing in the same direction. The commutator is made with a number of segments that run parallel with the shaft. These are insulated from each other and from the supporting hub in which they are held. The armature is wound in a number of sections, called coils, the number being the same as the number of commutator segments. The ends of the armature coils are

connected with one another and with the commutator segments in such a manner that at all times the current flows through all the armature coils and enters the commutator through one brush and passes out through the other. (This subject is explained more in detail in the section on continuous current generators.)

Q. Is there more than one way in which to wind an armature?

A. Yes; armatures for two-pole generators are wound either with an open coil winding, or a closed coil winding. The type of winding just explained is the closed coil, and it is so arranged that all the coils upon the armature are connected end for end so as to form a continuous wire. With the open coil winding, the different coils are not connected with each other, and each one connects with commutator segments that are insulated from all the rest. On this account, the current at any time only flows through a portion of the wire upon the armature, only through the coils that at the time are in contact with the commutator brushes; that is, through the coils whose ends are connected with the segments upon which the brushes rest.

Q. What is the difference between a two-pole generator and a multipolar generator?

A. The difference is, that the two-pole machine has only two poles, while the multipolar generator has any number from four upward.

Q. What is the difference between a generator and a dynamo?

A. There is no difference. Both names are used for the same machine; but dynamo is only used at the present time in connection with small machines, or with generators designed to develop currents suitable for arc lights.

Q. How many different kinds of winding are there for multipolar generator armatures?

A. There are, in addition to open and closed coil windings, the ring winding, the drum winding, and the formed coil winding. These are again divided into series and parallel windings, which are also called lap winding and wave winding.

Q. What is a ring winding?

A. A ring winding is the type used when the armature coil is made in the form of a ring and the wire is wound around the rim, the winding running parallel with the shaft.

Q. What is a drum winding?

A. A drum winding is the type used when the armature core is made in the form of a drum or cylinder and the wire is wound upon it end over end. These two types of winding are used with two-pole armatures as well as with those of the multipolar kind, and, in fact, are the only ones that are used in such cases to any extent.

Q. What is a formed coil winding?

A. In a formed coil winding the coils are wound upon a form and are placed upon the armature in their finished shape. In the manner of connecting with the commutator the formed coil winding is simply a drum winding. The formed coil winding is not practical with a ring armature of the two-pole type, but is so with drum armatures, although only used by one or two concerns.

Q. What is the difference between the series and the parallel windings?

A. In the series winding the coils that occupy positions upon the armature that correspond to the position of the poles of the same polarity are connected in series, and in the parallel winding they are connected in parallel. As in a generator having more than two poles there are as many placed where the direction of the current is the same as there are pairs of poles, it follows that the coils in these places can be connected either in series or in parallel. If in series, the current will run through all these sections one after the other, and the voltage of the current will be increased thereby; but if the connection is in parallel, the voltage will only be as much as is induced in one section of the armature, while the current strength will be increased in proportion to the number of pairs of poles. (For further information on this point, see section on continuous current generators.)

Q. Can the series and parallel windings be used on two-pole armatures?

A. No. In these armatures the current is in one direction on one-half of the armature, and in the opposite direction on the other half, hence there is but one way in which the wire can be connected; but in the multipolar armatures there are as many places where the induced currents are in the same direction as there are pairs of poles. In a four-pole generator the current flows in the same direction in the two opposite quarters of the armature surface, and, therefore, these can be connected in series if we desire to obtain a high voltage, or in parallel if we desire to obtain an increased current without raising the voltage.

Q. What is the difference between a constant current generator and a constant potential generator?

A. A constant current generator develops a current that is always of the same strength, that is, of the same number of amperes, while a constant potential generator develops a current that remains always at the same voltage.

Q. What is an ampere and what is a volt?

A. An ampere is the unit by which the current strength is measured, and the volt is the unit by which the current pressure, or electromotive force, as it is called, is measured.

Q. Do these units measure the power of the current?

A. No, they do not measure power any more that steam pressure measures power. If you say that steam flows through a pipe with a pressure of 100 pounds, you do not give any information by which the power can be measured, and if you say that the steam flows through the pipe at the rate of 100 cubic feet per minute, you give no information by which the power can be determined; but if you say that it flows through the pipe under a pressure of 100 pounds, and at the rate of 100 cubic feet per minute, then you give all the information necessary to determine the power. In the same way with an electric current, if you say that it flows through a circuit with a strength of 100 amperes, and under a pressure or electromotive force of 100 volts, then you give all the information necessary to determine the power, because the power is equal to the amperes multiplied by the volts.

Q. In what kind of units is the power expressed?

A. In watts. The watt was formerly called a volt ampere, but it is now called by the shorter name. The watt is a very small unit, being the seven hundred and forty-sixth part of a horse-power, and, on this account, a unit one thousand times as large as the watt is used for measuring the currents of large generators. This unit is called a kilowatt, and as the horse-power is only 746 watts, the kilowatt is equal to one and one-third horse-power, to within a very small fraction.

Q. Is it necessary to make any change in the construction of generators to make them generate currents of constant strength or of constant voltage?

A. Yes; the constant current machines are made with the coils that magnetize the field connected in series with the armature, so that all the current developed by the generator passes through the field coils. In addition they are provided with mechanical regulators. (For an explanation of these, see the section on arc-light generators.) The constant potential generators are wound with the field coils connected in shunt relation to the armature, and also in the combined shunt and series relation. The first type of field winding is called the shunt, and the second the compound. (For the manner in which these field windings act, see section on continuous current generators.)

Q. What is the difference between a motor and a generator?

A. The motor gives power when a current of electricity passes through it, and the generator develops a current when power is applied to set it in motion.

Q. How many kinds of motors are there?

A. There are several kinds. Motors are divided, first, into continuous current motors and alternating current motors. Those of the first class are, again, divided into constant speed motors and variable speed motors. The alternating current motors are also divided into constant speed and variable speed, and in addition are classified as synchronous motors, commutator motors, reaction motors, and induction motors. The induction motors are divided into single-phase and multiphase motors. Of these several types of alternating current motors, only the induction and the synchronous motors are of any practical interest; the others are defective in one way or another, and are not used.

Q. How is a constant speed, continuous current motor made?

A. The same as a constant potential generator. A machine that, when driven, will act as a constant potential generator when supplied with a constant potential current will run at a constant speed as a motor.

Q. How is a variable speed motor of the continuous current type made?

A. Just the same as a constant current generator, with the exception that the regulator used in the generator to keep the current constant is not used. In other words, a variable speed motor is made with the field coils connected in series with the armature, and a constant speed motor is made with the field coils connected in shunt with the armature.

Q. What are constant speed motors used for?

A. For driving all kinds of machinery where it is desired to keep the speed constant. The motors known commercially as stationary motors are of the constant speed or shunt wound type.

Q. What are variable speed motors used for?

A. They are used for any class of work where it is desired that the speed may be changed at will. There are not many cases in which this class of motors is required except for the operation of railway cars, and this is, practically, the only field of any magnitude in which variable speed motors are used.

Q. How is a motor started?

A. To start any kind of motor, it is necessary to introduce resistance in the circuit. This is owing to the fact that the resistance of the motor alone is not sufficient to hold the current back. As soon as a motor begins to revolve, its armature sets up a back pressure, which is called a counter electromotive force, and this holds the current back so that it cannot increase to a dangerous strength. If the motor is of the series type, that is, variable speed, the resistance is connected in the main circuit. If it is of the shunt type, that is, constant speed, the resistance is connected in the armatured circuit. As fast as the armature gains headway in the act of starting, the resistance is cut out of the circuit, so that it may all be cut out by the time the armature is rotating at the full velocity.

Q. How is this resistance introduced into the circuit and then cut out?

A. By means of what is called a motor starter.

Q. Suppose when the motor is running, it is greatly overloaded, what will be the result?

A. If the motor starter is not of the automatic overload type, the armature will be burned out, as the excessive current will heat the wire to such a high temperature as to ignite the insulation.

Q. What is an automatic overload cut out?

A. An automatic overload cut out is simply a circuit breaker attached to a motor starter.

Q. What is a circuit breaker?

A. A circuit breaker is a device that is so arranged that it will open the circuit when the current becomes too strong. It consists of a switch that is under the control of a magnet, and cannot move to open the circuit until the current reaches a certain strength.

Q. What is an automatic over and under load motor starter?

A. It is a starter that is provided with a circuit breaker to open the circuit whenever the current becomes too strong, and also with a circuit-opening device that will open the circuit whenever the current stops.

Q. What is the benefit of this kind of starter?

A. If the current stops when the motor is running, it opens the circuit, and then, if the current is established again before the attendant has time to open the main switch, the motor will not be burned out.

Q. Why would the motor be burned out if the switch were left closed in such a case?

A. Because then there would be no resistance in the armature circuit other than that of the armature wire itself, and this would not be sufficient to keep the current down to the safe lim.

Q. What is a safety fuse?

A. A safety fuse is a device that is arranged to hold a piece of wire which is generally made of some metal that will melt at a low temperature, this wire being so proportioned that it will melt, and thus break the circuit, if the current reaches a strength that would be dangerous to the apparatus in the circuit.

Q. Are there different kinds of safety fuses?

A. Yes, there are single and double pole fuses. The first is made so as to hold but a single fuse wire, and, therefore, only opens the circuit at one point. The double-pole safety fuse is provided with two pieces of fuse wire, and it is connected in the circuit so that these two fuse wires are located in the two wires leading from the generator, or leading into the apparatus that is to be protected. With this type of safety fuse, if the current becomes too strong, both fuse wires will be melted if one alone fails to open the circuit.

Q. Are circuit breakers made single and double pole?

A. Yes.

Q. What is the difference in action between a safety fuse and a circuit breaker?

A. Safety fuses only respond to increases in current strength that last long enough to heat the fuse wire to the melting point. But circuit breakers respond to an increase of current to the dangerous point whether it lasts for a fraction of a second or for a longer time.

Q. What is a field regulator?

A. A field regulator is a resistance arranged so that it may be introduced in the circuit of the shunt field coils of a generator.

Q. What is a rheostat?

A. A rheostat is a resistance.

Q. What is a switch?

A. A switch is any device that will open a circuit.

Q. How many kinds of switches are there?

A. There are a great many kinds of switches. There are single-pole and multipole switches, single-throw and multithrow, single-break and multibreak switches, and there are slow-break and quick-break switches. Of the multipole switches, only the two and three poles are used to any extent. Of the multithrow switches, the double throw is the only one commonly used. Of the multibreak switches, the double, triple, and quadruple break switches are the only ones commonly used.

Q. What is the difference between a single-pole switch and the multipole kind?

A. The single-pole switch opens the circuit on only one side of the line, while the multipole switch opens the circuit in two or more wires leading from the generator, or into the apparatus controlled by the switch.

Q. How can a switch open the circuit on more than two wires, when there are only two sides to a circuit, one the leading out wire and the other the leading in wire?

A. To complete a circuit, only two wires are necessary; that is, the current can leave the generator by one wire, and, after passing through the external circuit, return by another wire; but there may be one or more devices in the circuit that are so made that several branches of the main current are run through them; this would be the case if the device were provided with a number of separate magnet coils. Now, in such a case it might be necessary to break the current in all these branches, or to connect them with the main line, all at the same time, and then it would require for the purpose a switch with as many poles as there are wires or branch circuits to connect.

Q. What is the difference between a single-throw and a multithrow switch?

A. A single-throw switch can only make one connection when it is moved, that is, it can only open or close a single circuit. If one of its ends is connected with the main line, then, when it is thrown to the closed position, it will connect with a certain wire only. If the switch is double throw, it can connect the main line with one wire, by being thrown in one direction, and with another wire if thrown in the opposite direction. Now, suppose it is desired to connect the main line with three, four, or any number of different wires, one at a time; then it will be necessary to have a switch that can be thrown in as many different directions as there are wires with which to connect.

Q. What is the difference between a single-break and a multibreak switch?

A. A single-break switch is so arranged that when it is moved

to open the circuit, it only opens it at one place. A multibreak switch will open the circuit at two, three, or more points at the same time.

Q. What, then, is the difference between a multipole and a multibreak switch?

A. The multipole switch opens the circuit in several different wires leading from the main line, but the multibreak switch opens the circuit in only one wire leading from the main line, but at several points.

Q. Can these different types of switches be combined, that is, so that one switch will be of two or three kinds at one and the same time?

A. Yes; for example, we can have in single-pole switches, single-pole, single-throw, single-break switches. We can also have single-pole, single-throw, multibreak switches, and we can have single-pole, multithrow, multibreak switches. In multipole switches we can have multipole, single-throw, single-break switches; multipole, multithrow, single-break switches; and multipole, multithrow, multibreak switches.

Q. What is the difference between a continuous current and an alternating current?

A. The continuous current flows always in the same direction, and the alternating current reverses its direction many times in a second.

Q. Can both kinds of currents be used for the same purpose?

A. Yes, but not with equal success.

Q. For what purposes is each current best suited?

A. The continuous current is the best, in the present state of the art, for the operation of railway motors, and, generally, for stationary motors of small size. It is also the best for arc lighting. For incandescent lighting, one current is as good as the other. For transmitting power to great distances, the alternating current is the best, and also for the operation of motors of very large capacity. The alternating current is not suited for electroplating or similar purposes.

Q. Are alternating currents of the constant current, or the constant potential type?

A. Alternating currents can be either of the constant potential or the constant current type; but in practice only the constant potential current is used.

Q. How are the generators of alternating currents constructed?

A. The construction of these machines does not differ very much from that of the continuous current generators; the principal difference being in the absence of the commutator, this device not being required, as its office is to rectify the current.

Q. Is any other device used in the place of the commutator?

A. That depends upon the kind of alternating current generator.

Q. How many kinds of these machines are there?

A. There are the revolving armature machines, the revolving field machines, and the induction generators.

Q. In what way do these three different types differ?

A. In the revolving armature generators the moving part carries the wire coils in which the current is induced. In the revolving field type the moving part carries the wire coils that develop the magnetic field; and in the induction generators the wire is all stationary, and the revolving part is simply a mass of iron.

Q. Are alternating current generators of the two-pole or the multipolar construction?

A. They can be made of either design, but if of the two-pole type, they would have to rotate at a very high velocity, and on that account they are made with a number of poles; the number depending upon the velocity with which the armature can rotate, and also upon the frequency of the current.

Q. What is meant by the frequency of the current?

A. The frequency of the current is the number of times it alternates in a second.

Q. What is a cycle of an alternating current?

A. A cycle is one complete reversal; that is, if you start from the time when the current is zero, and follow it while it rises to the greatest positive value, and then declines to zero again, and then rises to the greatest negative value, and reduces to zero, you will have performed one complete cycle; for then in proceeding further you simply repeat the operation. One cycle corresponds to one revolution of the armature, if the generator is of the two-pole type.

Q. What is a period in alternating currents?

A. A period is the same thing as a cycle.

Q. What is a phase?

A. The word phase is also used to designate a cycle; its use comes from the manner in which alternating currents are represented on paper. To represent an alternating current graphically, we draw a horizontal line, and call this the zero line and also the time line. It is the zero line, because the current is represented by a curved line, and this curve crosses the zero line at the times when the current is zero. It is the time line, because distances measured upon it represent time. The current is represented by a wave line which is placed so as to be central with the time line; that is, so that from the top of the waves to the time line the distance will be the same as from the bottom of the waves. Now, in a wave line the portion from the top of one wave to the top of the next one forms one phase, and this much of the wave line also represents one cycle of the alternating current.

Q. What is a single-phase generator?

A. A single-phase generator is a simple alternating current generator; that is, a machine that generates a single alternating current.

Q. What is a two-phase generator?

A. A two-phase generator is a machine that generates two independent alternating currents that are out of time with each other.

Q. What do you mean by two currents out of time with each other?

A. If two currents reach the maximum positive value at the same time, and then both decline and become zero at the same time, and after that increase together, flowing in the negative direction, becoming of the maximum negative value at the same time, and then again reduce to zero, reaching this point together, then these two currents will be in time with each other or in phase with each other, as it is also expressed. Now, if the two currents do not rise and fall together, but one reaches the zero value after the other, then they are out of time or out of phase.

Q. Must the two currents be out of phase, or time, with each other to constitute a two-phase current?

A. Yes; if they were in time they could be considered as branches of one and the same current.

Q. What is a three-phase current?

A. A three-phase current is a system of three currents out of phase with each other.

Q. How are alternating current generators modified so as to develop single-phase, two-phase, and three-phase currents?

A. As the single-phase current is a single current, it is only necessary to provide one circuit upon the armature. With the two-phase current there are two currents, and, therefore, two different circuits must be placed upon the armature; and in the same way the three-phase current being three currents, requires three circuits.

Q. Is it necessary to wind the armature coils in a certain manner in each of these circuits for the different kinds of current, or is the same winding used in all?

A. The same winding is used in all; but the position of the coils has to be made to suit the character of current desired. If in the two-phase generator the coils of the two circuits were placed one on top of the other, the currents would rise and fall in both at the same time; but if the coils of one circuit are set so as to not be in line with the coils in the other circuit, then the currents in the two will not rise and fall together. In the same way in the three-phase system it is necessary to set the coils so that they are all out of line with each other, and then the three currents will be out of time.

Q. What is the proper time relation between the currents in a two-phase and a three-phase system?

A. In the two-phase the time relation should be such that when one current is zero, the other is at its maximum strength. When this is the relation, the currents are said to be in quadrature with each other, or that one lags behind the other by a quarter of a

cycle, or that there is a phase difference of one-quarter of a cycle between them. In the three-phase system, the currents must be out of time by one-third of a cycle.

Q. How is the field of an alternating current generator magnetized ?

A. By means of a continuous current, which may be derived from a separate machine, called an exciter, or it may be obtained from the alternating current from the armature by passing a portion of this through a commutator.

Q. Will an alternating current generator run as a motor if current is supplied to it ?

A. Yes ; but the current must be of the same kind as the machine generates when acting as a generator.

Q. Can it run if only the alternating current is supplied to the armature, or must the field coils be traversed by a continuous current ?

A. The field coils must be traversed by a continuous current just as in the case of a generator.

Q. Are motors of this kind constant or variable speed ?

A. They are of constant speed ; in fact, they will run at the same velocity as the generator that supplies the current, if the two machines have the same number of poles. On this account they are called synchronous motors.

Q. From this I am to understand that any generator of alternating currents when supplied with the proper current becomes a synchronous motor ?

A. Yes. Any generator will run in synchronism with the generator that furnishes the current, providing the two machines have the same number of poles. If the generator has double the number of poles the motor will run twice as fast.

Q. If a synchronous motor is so loaded down that it cannot keep up the speed, what will happen to it ?

A. It will come to a standstill ; these motors cannot run at any speed but that which synchronizes with the current frequency. If the load is more than the motor can carry, it is pulled out of step, as it is called, and comes at once to a stop.

Q. What is an induction motor, a variable or a synchronous speed machine ?

A. An induction motor can be a variable speed machine, or it can be a constant speed machine ; that is, constant in a practical sense ; but it cannot be synchronous.

Q. How many kinds of induction machines are there ?

A. There are two kinds of induction motors, the single-phase and the multiphase.

Q. Is there any particular difference between them in the manner in which they act ?

A. Yes. The single-phase motors will not start of their own accord, unless provided with special starting devices, which consist, in reality, in so changing their connections with the circuit as to convert them into two-phase machines in the act of starting. Multiphase motors will start unaided.

Q. Will synchronous motors start alone ?

A. No. They must be run up to full speed before they will develop any power.

Q. Is it necessary to run a single-phase motor up to full speed in starting it, that is, providing it is not made so as to act as a two-phase motor in the start ?

A. No. A single-phase motor will start if it is given a good send-off.

Q. What is a rotary field motor ?

A. This is simply another name for an induction motor. These machines are also called rotary field motors, because in them the magnetic field rotates.

Q. What is a transformer ?

A. A transformer is an apparatus or a machine that can transform a current of one voltage into a current of another voltage.

Q. How many different kinds of transformers are there ?

A. There are two types, the stationary and the rotary transformer.

Q. What kind of an affair is the stationary transformer ?

A. The stationary transformer is a stationary mass of iron, upon which two sets of coils are wound, one of these sets being called the primary and the other the secondary wire, or coils.

Q. How does this type of transformer act ?

A. The current from the generator passes through the primary coils and develops an alternating magnetic field in the iron mass, and this alternating field, by cutting through the wires of the secondary coils, induces in them a secondary current. (For further details see section on Transformers).

Q. How can this apparatus transform a current when the secondary current is not a part of the primary, but an entirely independent current ?

A. A transformer does not transform a current, it generates a new one by the inductive action induced by the primary, but the name is given from the fact that the voltage of the secondary can be different from that of the primary, either lower or higher.

Q. What is a step-down transformer ?

A. A step-down transformer is one that develops a secondary current of lower voltage than the primary.

Q. What is a step-up transformer ?

A. A transformer that delivers a secondary current of higher voltage than the primary.

Q. What is a rotary transformer ?

A. A rotary transformer is a machine with a rotating armature, and it is so arranged that it transforms alternating into continuous currents. Some of these machines actually change the alternating current into a continuous one, but in others the secondary continuous current is entirely independent of the alternating primary.

Q. What are transformers used for ?

A. The stationary transformers are used to lower the voltage of currents generated in central stations, so as to obtain a pressure suitable for operating incandescent lamps. These are step-down transformers. Step-up transformers are used to develop secondary currents of high voltage to send over long transmission lines, so as to reduce the size of the line wires. At the end of the line the current is again run through a step-down transformer, and a secondary of lower voltage is obtained therefrom. Rotary transformers are used where it is desired to obtain continuous currents from the alternating circuits.

Q. Are there any continuous current transformers ?

A. Yes ; but these are all of the rotary type. It is not possible to make a continuous current transformer without rotating parts.

Q. What are such transformers used for ?

A. They are used in cases where it is desired to obtain a continuous or alternating current of a voltage different from that in the operating circuit.

Q. What is a booster ?

A. A booster is a continuous current transformer used to raise the voltage of the line current from which it is operated. When such a machine is used to develop a current in a separate circuit it is called a rotary continuous current transformer ; but when it is used to increase the voltage of the main line, it is called a booster.

Q. What is a motor dynamo ?

A. A motor dynamo is a small booster ; it is another name for the same machine.

Q. What is a dynamotor ?

A. A dynamotor is a rotary continuous current transformer, so made that only one armature is required, and this acts as motor and dynamo by having two independent circuits wound upon it, one being traversed by the current that operates the machine and the other by the current that is induced. Dynamotors can be used for the same purposes as motor dynamos, or rotary continuous current transformers ; they are only different forms of the same machine, and are given different names when used for different purposes.

Q. What is an arc lamp ?

A. An arc lamp is an apparatus arranged to produce light by causing a current to jump between two carbon points separated from each other by a short distance.

Q. How many different types of arc lamps are there at the present time ?

A. There are three: the constant current lamps, the constant potential lamps, and the alternating current lamps.

Q. How are the carbons fed together in arc lamps as they burn away?

A. By means of mechanism that is under the control of the current. In some lamps the mechanism consists of a train of gears or clockwork, as it is commonly called; and in others it consists of a simple clutch which holds the carbon from dropping, except when it becomes necessary to maintain the proper distance between the ends of the carbons.

Q. What is an open arc lamp?

A. An open arc lamp is one in which the carbons are inclosed in a globe which allows a free access of the air.

Q. What is an inclosed arc lamp?

A. A lamp in which the carbons are inclosed in a globe that is nearly air-tight.

Q. What kind of instruments are used to measure electric currents?

A. The instruments commonly used for this purpose are the volt meter, the ammeter, and the watt meter.

Q. Does the volt meter measure volts; and if so, how?

A. The volt meter measures volts, and it does it by being placed so as to be in a circuit running from one side of the line to the other, so as to be acted upon by as strong a current as the whole voltage of the circuit will force through it. To illustrate the point, suppose we desire to measure the voltage of a generator, then we connect the volt meter to the two wires coming from the binding posts of the generator; therefore, the current that will pass through the instrument will be all that the voltage of the machine can force through it, hence the pointer will swing around as far as this amount of current will send it. The amount of current that will pass through the instrument will be very small because its resistance is very high, it being made so expressly for the purpose of preventing a strong current from passing through it.

Q. How does the ammeter work?

A. As the ammeter measures the whole current, it is not connected across the terminals of the generator, but is inserted in one of the lines leading from it; and the current that passes through it is not a very small portion of the whole, as in the volt meter, but the total current; hence the instrument will indicate the current strength and not the voltage.

Q. How does the watt meter act?

A. The watt meters are made in the form of small motors, and these drive a train of gearing that moves a set of indicator hands, just the same as in a gas meter. The motor is made so that the stronger the current that passes through it, the faster it will rotate, and it is so proportioned that its increase in speed is directly in proportion to the increase in power in the circuit; that is, it takes account of the voltage of the current as well as the strength.

Q. What is a recording volt meter and a recording ammeter?

A. These are instruments that make a record, on paper, of the volts and the amperes during a run of a certain length of time, generally one whole day.

Q. Where are these instruments generally located?

A. Upon the switchboard.

Q. What is a switchboard?

A. A switchboard is a panel, or number of panels, placed side by side, generally made of marble or slate, and located so that all the instruments, switches, etc., that are required for readily handling the current may be placed upon it.

Q. What is the object of a switchboard?

A. Its object is to facilitate the handling of the generator and the various circuits into which the current is fed.

Q. What is the general arrangement of a switchboard?

A. Generally, the wires leading from the generator, or generators, are attached to circuit breakers, these being, as a rule, located at the top of the board. The currents from the generators, after passing through the circuit breakers, go to what are called bus bars, although in some cases they are passed through two-pole switches before reaching the bus bars. The terminals of the several external circuits are carried to smaller circuit breakers, and from these to switches which may be two or three pole, as may be required. From these switches the wires run to the bus bars. From this it will be seen that the generators feed into the bus bars, and the external circuits draw current from the same bus bars. As the generators are provided with circuit breakers, the circuit of any machine will be opened if the current strength in it rises to a dangerous point. As there are main switches in each generator circuit, it is possible to connect, or disconnect, any machine from the circuit at any time. As the external circuits are all connected with the bus bars through separate switches, it is possible to cut any one, in or out, whenever it may be desired to do so; and as each circuit has its own circuit breaker, the current cannot rise to the danger point in any part of the system, the circuit breakers in each branch affording the necessary protection. The instruments placed upon the switchboard are volt meters, ammeters, and sometimes watt meters; these latter, however, are more often used in the premises of consumers, so that they may show how much current energy has been used. The volt meters and ammeters upon the switchboard are connected with the several generators, and also with the whole circuit, so as to indicate what each machine is doing, and also what the total current amounts to.

Q. What is an open circuit?

A. An open circuit is a circuit that is not continuous; therefore, a current cannot flow through it. When a current cannot be forced through the wires, it is because the line is open circuited.

Q. What is a short circuit?

A. A short circuit is a short cut made by the current through a path outside of the regular circuit. Short circuits are established when the insulation at some point is imperfect and the current jumps through it; but to establish a short circuit it is necessary for the insulation to give away at two points some distance apart, for if the current gets out of the circuit through one leak in the insulation, it cannot get back except through another leak.

Q. What is a lightning arrester?

A. A lightning arrester is an apparatus so made that it will protect the motors, or other devices in the circuit, from the effects of lightning discharges.

Q. What is a ground detector?

A. A ground detector is any device that will enable us to determine whether there is a leak in the insulation of the circuit that allows the current to escape to the ground.

APPENDIX—PART II.

DICTIONARY OF WORKSHOP TERMS

A

Addendum. That part of a gear wheel tooth that extends beyond or outwards from the pitch line.

Addendum-circle. The circle representing the full or greatest circumference of a gear wheel.

Adjustable reamer. A reamer whose teeth may be adjusted to the required diameter.

Alternator. An alternating current dynamo.

Ammeter, *or* **ampere meter.** An instrument for measuring the quantity of current delivered at any moment from the dynamo.

Ampere. The unit of measurement in measuring the rate of flow of the current.

Angle-iron. A shape of wrought iron or steel having two flanges at a right angle: thus L

Angle-plate. A plate having surfaces at a right angle, one to bolt to the machine work-table, the work being bolted to the other.

Angle-tooth. A gear wheel tooth that runs across the face of the wheel in a line that envelops part of the wheel circumference.

Angular cutters. Cutters, whose teeth are on a circumferential surface, that is, at an angle to the cutter axis, such angle not being that of 90° to either the side face nor to the axis of the cutter.

Angular velocity. Velocity measured in degrees of angle.

Annular. In the form of a ring.

Apron. 1. The piece that carries the tool port or clamp on an iron planing machine. 2. The front plate of a lathe carriage.

Arbor. 1. A mandrel used to drive work upon. 2. A spindle or shaft of a machine.

Arc. A portion of a circle.

Archimedian drill (ăr-kĭ-me-dē'an). A drilling device in which a nut moved endwise on a stock or handle causes the drill to revolve back and forth.

Arc of approach. That part in the revolution of a pair of gear wheels in which the teeth in contact approach the line of centres of the two wheels.

Arc of recess. That part in the revolution of a pair of gear wheels in which the teeth in contact recede from the line of centres of the two wheels.

Arc-pitch. The pitch of gear wheel teeth when measured around the pitch circle.

Armature. That part of a dynamo which generates electric current.

Assembling. Putting together the parts of a machine.

Attachment. A work-holding device that may be attached to a machine.

Auger A wood-boring tool having two spiral plates and a pointed screw to feed it, the cutting edge being at the end of the tool.

Axle-box. The bearing in which an axle revolves.

B

Back-gear. The toothed wheels on the spindle of a lathe and at the back of the lathe-head, by means of which the speed of the lathe is reduced.

Back-geared lathe. A lathe having a back gear to reduce its motion.

Back-knife gauge lathe. A lathe in which the work is finished and cut to size and shape by a knife at the back of the lathe.

Balanced pulley. A pulley whose weight is so equally distributed that it will run steadily and smoothly at the speed for which it is balanced.

Balanced valve. A valve so constructed as to move with equal force in either direction.

Ball and socket joint. A universal joint consisting of a ball on the end of a shaft and in a casing that envelops it and yet permits it to be moved in its casing.

Ball-cutter. A tool for finishing metal balls.

Ball-pene. A spherical pene of a hammer.

Band-saw. A continuous ribbon of steel having saw teeth on one of its edges.

Band-saw machine. A machine for operating a band-saw.

Bastard file. A file whose teeth are one degree or grade coarser than a *second* cut file and one degree finer than a *coarse* cut file.

Bearing. A guide to steady a shaft or rod, and maintain it in position.

Belt. A leather band employed to drive pulleys, for transmitting motion.

Belt-clamp. A clamp for pulling the ends of a belt together, to lace it, while the belt is upon the pulleys.

Belt-hook. A hook employed to fasten the ends of belts together.

Belt-pulley. A wheel that drives or is driven by a belt.

Belt-shipper. A device for moving a belt from one pulley to another.

Belt-tightener. A pulley employed to cause a belt to tighten upon another pulley to enable it to transmit motion periodically instead of continuously.

Bevel-sawing machine. A wood-working machine in which the saw or the work-table may be set to cut a surface at other than a right angle to the face of the work that rests against the work-table or the fence as the case may be.

Bevel-square. A square whose blade may be set to any required angle to the stock that holds it.

Bevel-wheel *or* **bevel-gear.** A gear wheel with its teeth at an angle to its shaft.

Bit. 1. A boring tool. 2. A tool that is carried in a holder.

Blank. A piece of material roughly formed and ready to be formed into some definite shape.

Blast-pipe. 1. The pipe conveying the blast or air to a fire furnace or cupola. 2. A small pipe through which steam escapes up a locomotive chimney to increase the draught of the fires.

Blob. An extremely loose place in a plate or saw blade.

Block-plane. A short plane.

Bobbin. A cylindrical magnet.

Boiler-shell. The outer casing of a steam-boiler.

Bolt. 1. A holding device having a head at one end and at the other a threaded stem to receive a nut. 2. A short piece of a round log.

Bolt-cutter. A machine for cutting screw threads upon bolts or similar work.

Boring-bar. A bar that carries boring tools.

Boring-machine. A machine for boring holes in metal or wood.

Boring-mill. A form of lathe used mainly for boring.

Boring-tool. A tool for cutting out and enlarging a bore or hole.

Boss. An enveloping piece on an axle or shaft and having upon it an arm, arms, or spokes.

Bottoming-tap. A tap having a full thread up to its very end so that it will cut a full thread to the bottom of a hole.

Box-chuck. A rectangular two-jawed chuck used by brass finishers.

Box-tool. A tool used in screw machines and turret heads, and which guides the work while it is being operated upon. A box tool in many cases carries more than one cutting tool.

Box-wrench. A wrench which fits over the head of the bolt and passes endways upon it.

Brace. 1. A rod, bar, or beam that braces or supports. 2. A device for revolving cutting tools.

Bracket. A projecting frame that is bolted to its supporting pieces or frame.

Brad-awl. An awl for piercing small holes in wood and having a wedge shaped end.

Branch-pipe. A pipe leading out of another.

Brass-and-brass. A term used to denote that the two brasses or boxes of a bearing are locked together by the key, cap, or set-screw.

Brasses. Pieces fitted into a frame and intended to afford a bearing for a journal.

Break-lathe *or* **gap-lathe.** A lathe having a break or gap in the bed and beneath the face plate to let chucked work of large diameter pass.

Broach. A toothed tool for cutting the walls of a hole.

Broaching-press. A machine that forces a broach to its cut.

Brush. That part of a dynamo that collects the electricity from the armature.

Bunter-dog. A work gripping device for a planing machine, and consisting of a piece having a hook end to engage in the T-slot of the table, and a set-screw to bind the work.

"Burning out" of an armature. The destruction of the insulation of the iron plates of an armature, by overheating.

Butt-joint. A riveted joint in which the ends of the plate abut fair, one against the other.

Butt-strap. A strip or band of iron employed to hold the joint together in a butt-joint.

Butt-weld. A weld in which the end of one piece merely abuts against the other when the two pieces are put together to weld.

Buzz-planer. A wood-planing machine in which the work is fed by hand

By-pass. A shunt from the main current.

C

Calender roll. A roll for calendering paper.

Caliper-gauge. A gauge in the form of a solid caliper.

Calipers. A hinged tool for measuring work.

Cam. A revolving disc whose actuating surface is not a true circle.

Cam-motor. A cam together with the rod it actuates.

Cap. The plate or upper part of a bearing that holds the top half of the box or brasses in place.

Cape-chisel. A narrow machinist's chisel.

Caps. The backward curves on the points of file teeth.

Cap-screw. A screw with a collar and a square head.

Carbon. The material through which the current flows to form the light of an arc lamp.

Carbon filament. The loop which gives the light in an incandescent lamp.

Carrier. A device for driving lathe work.

Case hardening A process of hardening the surface of wrought iron, the hardening usually extending about $\frac{1}{32}$ inch in depth.

Cat-head. A sleeve fastened by set-screws to slender lathe work and running in a bearing so as to steady the work.

Caulking-tool. A tool used for caulking riveted joints and in making rust-joints.

Centre bit. A bit having a triangular conical point with its cutting edge on one-half of the end and a spur on the other half.

Centre-punch. A tool having a coned point for marking the centres to work.

Chamfer. A facet that removes the corner of a right angle.

Change-gears *or* **change-wheels.** The gear wheels employed to change the revolutions of a lead screw or feed motion.

Chaser. A toothed tool for cutting threads by hand in a lathe.

Check. A crack.

Check nut. A second nut screwed against the first to check it from slackening back.

Chip-break. A piece that rests upon the work of a wood-working machine and prevents the cutter from splitting out the wood as the cut leaves the surface.

Chipping-hammer. A machinist's hand hammer.

Chips. 1. The cutting from a metal cutting machine tool. 2. The thick cuttings from a wedge-shaped wood-working tool, as from an axe or adz.

Chisel. A wedge-shaped tool.

Chisel-tooth saw. A saw having inserted teeth with a maximum of front rake.

Chop *or* **hammer-sink.** A mark left on a plate by a sawmaker's or plate straightener's hammer.

Chord-pitch. The pitch of gear wheel teeth measured in a straight line.

Chuck. A work-holding or tool-holding device.

Chucked. Held in a chuck.

Chucking-lathe. A lathe having a large face plate for chucking purposes, and usually a short bed.

Chuck-plate. A large face-plate on which work may be chucked.

Circuit. The path of an electric current.

Circular-saw. A saw having its teeth arranged around its circumference.

Clamp. A device for fastening or holding work together or to some other part.

Clearance. 1. The amount to which one piece clears or escapes another. 2. On a lathe tool, clearance is the amount to which the back face of the tool escapes the metal it is cutting.

Clements driver. A device for driving work in a lathe, and that places an equal strain on each end of the lathe dog or carrier.

Clutch. A device for engaging or disengaging so as to cause the motion of one piece to be communicated to another, or to stop such communication.

Cock. A device for opening or closing the bore of a pipe.

Cog. A wooden tooth for a gear wheel.

Collapsing-taps. A tap that is so formed that its teeth close inwards when the thread is cut so that the tap can be withdrawn without winding it backward.

Collar. 1. A disk-shaped enlargement on a cylindrical piece. 2. A hollow cylindrical piece containing a set screw, to prevent a shaft from end motion.

Collet. A casing for holding tools or drawers in position.

Combination-chuck. A chuck in which the jaws may be moved simultaneously or independently.

Commutator. That part of the armature of a dynamo which conveys the electricity from the armature windings to the wires that connect to the measuring instruments, etc

Comparator. A machine for comparing measurements, for testing them and originating sub-divisions.

Compass-calipers. A pair of calipers having one bent leg and one leg with compass joint.

Compasses. A tool answering the same purpose as dividers, but with longer legs and a set screw to secure the position of the legs.

Compass-plane. A plane whose sole or bottom is curved in its length.

Compound gears. A train of gear wheels in which there are two wheels fixed on the same shaft but of different diameters so as to vary the velocity.

Compound slide-rest. A slide-rest having two slides, one above the other.

Compound wound dynamo. One which has in the field the winding of both a series and a shunt machine.

Conducting coil. A coil for conducting electricity.

Conductivity. The capacity to conduct.

Cone-bearing. A bearing (for a journal) that contains a coned sleeve that may be moved endways to take up wear.

Cone-mandrel. A mandrel that holds hollow work by means of two cones.

Cone-plate. A device for steadying work in the lathe by supporting one end in a coned mouth.

Cone-pulley. A pulley having steps of different diameters.

Cone-shaft. The shaft for a cone pulley.

Converter. An instrument for reducing the strength of an electric current.

Cook's auger. An auger rounded at the end for cutting end-grain wood.

Cope-cutter. A cutter for under-cutting the shoulder of a tenon on wood-work.

Cope-head. A head for a cope-cutter in a tenoning machine.

Core. A body of sand that produces a hole or cavity in a casting.

Core-box. The box in which a core is made.

Cored. Containing a hole or recess.

Cotter *or* **cottar.** A term applied to small keys that are very broad in proportion to their thickness.

Cotter-drill. A drill used in cutting out keyways in a machine.

Cotter-file. A file thin in proportion to its length, for filing out keyways or slots.

Counterbore. 1. A parallel recess at the mouth of a hole. 2. A tool for producing such a recess.

Countershaft. A shaft with pulleys upon it, employed to permit a machine to be started and stopped without stopping and starting the line shaft; also, to afford means for varying the speed of a machine.

Countersink. A tool for cutting a coned mouth to a hole.

Countersunk. Having a coned mouth.

Coupling. A piece used to connect two pieces together.

Covering-plate. A plate used to cover the seams of a boiler.

Cow-mouth chisel. A machinist's chisel shaped at the cutting end like a carpenter's gouge.

Crank. An arm that is fast to a shaft and is used as a lever wherewith to revolve the shaft.

Crank-shaft. A shaft having a crank.

Cross-cut. A narrow machinist's chisel.

Cross-cut saw. A saw whose teeth are shaped to cut across the fibre or grain of wood.

Cross-face. A plate straightener's or saw maker's hammer, having one face at a right angle to the other.

Cross-feed. That feed of a lathe which runs across the bed.

Cross-filing. That class of filing in which the file is pushed in the line of its length.

Cross-head. That part of an engine that connects the piston rod to the connecting rod.

Cross-slide. A slide that stands across a work-table.

Crowning. Highest in the middle when tested by a straight edge.

Crown-wheel. A gear wheel having its teeth upon its side face.

Cup-chuck. A chuck having a coned or cupped mouth.

Cup-shape. A crack of circular form in a piece of timber or a log.

Current. The flow of electricity.

Cut-out. An instrument for cutting out an electrical current.

Cutter. A tool that is held or carried in a stock bar or mandrel.

Cutter-bar. The bar or shaft that carries the cutting knives in a wood-planing machine.

Cutter-grinder. A machine for grinding cutters.

Cutter-head. 1. A head that carries cutters. 2. The head that carries the cutters in a wood-moulding machine.

Cutting-off lathe. A lathe used for cutting up rods into required lengths, and having a hollow spindle through which the rod passes.

Cutting-off saw. A sawing machine designed for cropping the ends of work and cutting it to length.

Cutting-off tool. A tool for cutting up rods or bars, and used in the common lathe and in the cutting-off lathe.

Cycloid (si'kloid). A curve generated by a pencil fixed in the perimeter of a circle that is rolled upon another circle.

Cylinder. 1. That part of a steam-engine in which the steam is utilized to drive the piston. 2. The shaft that carries the knives in a wood planing machine.

Cylinder-head *or* **cylinder-cover.** A piece that encloses or seals the end of a cylinder.

D

Dash-pot. A small cylinder attached to the armature of the lamp, carrying inside a piston.

Dead centre. The stationary centre of a lathe.

Dead smooth file, *or* **superfine file.** The finest or smoothest cut of file.

Delivery-rolls. Rolls that remove the work from a machine or from its cutters or knives.

Describing-circle. The circle or cylinder containing the pencil for rolling a curve.

Diametral pitch. A system of designating the pitches of gear wheels.

Diamond-point. A machinist's chisel, square in cross-section, having a diamond-shaped face at the end, and two cutting edges, one at a right angle to the other.

Die. 1. A tool for cutting threads upon external surfaces, such as bolts. 1. A chumpy sliding piece.

Difference potential. The unit of electro-motive force.

Differential screw. A screw having a coarse and a fine thread, the difference between the two pitches enabling a more powerful strain to be endured by the thread.

Dimension planer. A wood-planing machine, for planing accurately to size.

Direct current dynamo. One in which the current flows continually in one direction.

Disk *or* **disc.** A cylinder whose length is very short in proportion to its diameter.

Disk dynamo. One whose armature and field magnets are arranged in the form of disks.

Dividers. A tool having two legs with sharp points at their ends for measuring distances or drawing circles.

Dog. A work-holding device.

Dog-chuck. A chuck containing independent dogs or jaws.

Dog-head. A hammer used in plate or saw straightening.

Double-eye *or* **knuckle-joint.** A joint in which one piece is forked at its end, to receive the other, and a pin passes through both.

Double-thread. A screw thread, having two spirals in the same bolt or body.

Dovetail. A groove that is wider at the bottom than at the top, or a projection thicker at the top than at the bottom.

Draw-filing. That class of filing in which the line of file motion is in the direction of the width of the file.

Drawn-down. Decreased in diameter, width or thickness, by forging or swaging.

Drawn-out. Increased in length, by forging or swaging.

Drift. A tool that cuts the walls of a hole while it is driven through by hammer blows.

Drift-pin. A taper pin that is used by boiler makers to drive through holes that do not come fair, or match properly.

Drill. A tool to pierce holes.

Drill-chuck. A chuck used to hold drills.

Drilling-machine. A machine for drilling holes in metal.

Driver. 1. A device for driving work in the lathe and sometimes called a dog or carrier. 2. A gear wheel which drives another.

Drop-hammer. A forging or stamping hammer which is lifted by power and let fall of its own weight.

Drunken thread. A screw thread that is not a true spiral, but is waved in its course.

Duplex slide-rest. A feed motion in which there are two slide-rests in one slide-way.

Dutchman. A piece let in to restore a worn part, or to hide a defect.

Dynamo *or* **generator.** A machine that generates electricity.

Dynamo circuit. The path of the current through the field magnets and commutator.

E

Edge-moulding machine. A machine for dressing the edges of wood-work to shape, and usually for forming a moulding thereon.

Electro magnet. One that becomes magnetic when an electric current passes through the wire coils with which it is wound.

Emery grinder *or* **emery-grinding machine.** A machine in which emery wheels are used to grind the work.

Emery wheel. A wheel composed of emery cemented together under pressure.

Endless screw. A short length of screw formed to drive the teeth of a worm wheel.

End-mill. A milling-machine cutter having teeth on its end face.

Engine-lathe. A lathe having a feed motor for the cutting tool.

Epicycloid (ĕp-i-sī'kloid). A cycloidal curve in which the rolling circle is rolled outside the fixed or base circle.

Equalizing-file. A file that is slightly thicker in the middle than it is at either end.

Expanding-chuck. A chuck that is capable of expanding to accommodate a slight variation of work-diameter and usually holding the work from its bore.

Expanding-mandrel. A mandrel whose diameter may be varied, usually by means of moving jaws or pieces.

Expansion-joint. A joint capable of permitting the parts it connects to expand and contract under variations of temperature.

Extension-bit. A bit in which a cutter can be set so as to bore different sizes of holes.

Extension-lathe. A lathe whose bed is in two longitudinal divisions so that the upper one may be moved endways and thus form a gap to let chucked work of large diameter pass.

F

Face. 1. The broadest surface of a piece, or that having the largest area. 2. The circumferential surface of a wheel or pulley. 3. A surface on a gear-wheel tooth.

Face-cam. A cam in which the actuating surface is on its side or sides.

Face-cutter. A milling cutter having its teeth upon its circumferential surface.

Face-plate. A plate or table having a plane or flat surface for holding work.

Facing-cutter. A cutter for levelling a face or surface.

Farrar planer. A wood-planing machine in which a travelling bed is used to feed the work to the cutter head.

Feather. A key that is fast in one piece of the work, and an easy fit to the other, so that the latter may be moved along the feather.

Feed-motor. That part of a machine that feeds either the work or the tool, so as to put on the cut.

Feed-rolls. Rolls that move the work to machines or to cutting tools.

Feed-screw. A screw that is used to feed the cutting tool in a machine.

Fence. A plate in a wood-working machine, against which the work is set or moved to hold it in proper position for the cutting operations.

Fiddle-drill. A drill that is revolved back and forth by a device similar to a fiddle-bow.

Field. The space between north and south poles of a field magnet.

Field coil. A coil in the magnets of the field in the dynamo.

Field magnet. That part of a dynamo which generates the magnetism.

Fifth wheel. The circular slideway that enables the front axle of a vehicle to turn horizontally.

File. A hand tool for cutting metal, wood, ivory, bone and all other hard substances except stone.

File-card. A wire-brush for cleaning files.

Fillet. A curved piece for filling in a corner.

Fillister-head. A screw-head that is cylindrical and contains a screw slot.

Firmer-chisel. A stout carpenter's chisel that is used for cutting out mortises and similar heavy work.

Fit-strip. A projection usually about an inch wide that is intended to be fitted to bed the piece properly and save bedding the whole surface of the piece.

Fixture. A device for holding work in an exact position, true with some one face, hole, or pin, as the case may be.

Flat-chisel. A wedge-shaped machinist's chisel.

Flat-drill. A drill whose body is rectangular in cross-section.

Flatter. A swage for flat surfaces.

Fleam. Acuteness given to saw teeth by filing their front faces at an acute angle to the plane of the saw blade.

Flexible shaft. A shaft composed of wire, similar to a wire rope, for transmitting rotary motion, notwithstanding that the shaft may be an arc of a circle.

Flooring-machine. A machine for planing and matching at the same time, and generally used for floor boards.

Flow. Movement in one direction.

Flute. A groove.

Fly-cutter. A cutting tool fastened in an arbor or spindle, and used for producing irregular shapes.

Follower. A gear-wheel that receives motion from another gear wheel.

Follower-rest. A rest that steadies work on the lathe and travels with the slide rest.

Foot-block. A work-holding device containing a dead centre, used upon a milling machine.

Foot-lathe. A lathe operated by foot-power.

Fore-plane *or* **jack-plane.** A roughing out plane.

Forging. A piece or part that has been forged into shape.

Fork-centre. A centre used to drive woodwork in the lathe.

Fork-scriber. A double pointed tool used by boiler makers to mark small circles.

Former. 1. A piece that acts as a guide to control the movement of a cutting tool. 2. A template or block on which a piece is bent or shaped.

Foucault current. An eddying current. It is sometimes called an eddy current or a parasitic current.

Fox-lathe. A brass finisher's lathe, having a turret head and spiral thread-cutting devices that obviate the use of a lead screw or change gears.

Friction-clutch. A clutch that operates by frictional conract.

Friction-gearing. Wheels that transmit motion by the frictional contact of their circumferences.

Friction-rollers. Rollers employed to reduce the friction of the parts.

Friction-wheel. A wheel that drives by the frictional contact of its surface.

Friezing-machine *or* **edge-moulding machine.** A machine for cutting mouldings on the edge of wood work.

Front-tool. A tool having its cutting edge in front, and used for plain surfacing work.

Fuller. A blacksmith's tool for spreading the metal in any particular direction.

Fuse. A strip of lead, tin, or other soft metal which is drawn to a fixed size and calculated to carry a given current, and which therefore fuses as soon as an excessive current flows through it, and is used to protect house wires, dynamos, etc.

G

Galvanometer. An instrument for detecting the presence of electric currents.

Gang-drill. A drilling machine on which a number of drills may be used simultaneously.

Gang-edger *or* **gan-edgingg machine.** A machine in which a gang of saws are employed to trim the edges of boards or cut them to width.

Gang-mills. Milling machine cutters that are placed in gangs and side by side on the same arbor.

Gap-lathe *or* **break-lathe.** A lathe having a gap in its bed to enable the chucking of work that would not otherwise pass over the bed.

Gauge. 1. A standard of measurement. 2. A standard of shape.

Gear. A term applied to a piece of mechanism that accomplishes a single object; thus a valve-gear operates a valve; a steering gear steers the vessel.

Geared. Placed in gear or connected together.

Gear-wheel. A wheel provided with teeth to engage with similar teeth upon another wheel.

Generating-circle. The circle that is supposed to move in the construction of cycloidal curves.

Generator *or* **dynamo.** A machine that generates electricity.

Gib. 1. A piece that may be set up to take up the wear. 2. A piece for holding a strap, and forming an abutting piece for a key.

Gimlet. A wood-boring hand tool, having a threaded conical end to pull it to its cut.

Gimlet-bit. A fluted gimlet having no thread at its end, but a spiral flute so shaped as to pull the bit forward to its cut.

Gland. A piece enveloping a stem and used to make a tight working joint.

Globe-valve. A valve having a spherical body, used in pipe-work.

Goose-neck. A frame affording a fulcrum for a ratchet brace.

Gouge. A wood-cutting hand tool that is curved in its cross-section.

Gramme. The name of the inventor of ring armature for dynamos.

Gravis. A hand tool, rectangular in cross-section and having cutting edges at its end that are formed by grinding the end face at an acute angle to the body of the tool.

Groove-cam. A cam in which the actuating surface is in the form of a groove.

Ground-detector. An instrument used to tell when the mains are grounded.

Ground-joint. A joint that is finished by grinding the parts together, usually with oil and emery.

Guide-bar *or* **slide-bar.** A bar that forms a guide for the crosshead of an engine or other moving piece.

Gum. 1. The bottom of the space between saw teeth. 2. A rubber-like substance formed of oil that has dried.

H

Hack. A tool used for cutting iron in two under a steam hammer.

Hack-saw. A saw hold in a frame and used by hand for cutting metal.

Half-check joint. A joint in which a piece is let into the other, so that the surfaces come level.

Half-round file. A file that is half round in cross-section.

Hand-file. A superior class of file that is parallel in width and thickest in the middle of its length.

Hand-hammer. A hammer that can be used in one hand.

Hand-lathe. A lathe with which hand cutting tools are used.

Hand-nut. A nut that may be screwed up by hand without the aid of a wrench.

Hand-planer. A wood-planing machine in which the work is fed by hand.

Hand-rest. The rest on which hand turning tools are supported in a lathe.

Hand-tap. A tap that is used by hand.

Hand-vise. A small vise for use in the hand.

Hanger. A frame that is bolted to another frame or part, and carries another piece, usually a shaft of some kind.

Hardened. Hardened steel is that which has been made hard by heating to a cherry red and suddenly cooling it, usually by quenching it in water.

Hardy. A blacksmith's chisel that fits into the anvil.

Heading-block. A block used in upsetting the heads of bolts or pins.

Heart-shake. A split radiating from the centre of a log.

Heating-surface. That part of the surface of a steam-boiler that receives heat on one side and has water on the other.

Heel-tool. A hand turning tool having a projecting heel to cross the tool rest, and usually held in a wooden stock or handle.

Herring-bone tooth. A form of gear wheel tooth in which the tooth, instead of passing direct across the wheel face, curves partly around the circumference and then back again, so that the two ends of the tooth only are opposite to each other.

Hindley's-screw. A short length of screw used to drive a worm wheel, and sometimes termed an endless screw.

Hob *or* **hub.** A tool for cutting the threads on screw cutting tools, such as chaser dies.

Horseshoe magnet. One corresponding in form to a horseshoe.

Hour-glass screw. A worm or tangent screw which is formed to envelop part of the arc of circumference of a worm wheel, and therefore assumes in outline the form of a sand hour-glass.

Hunting-tooth. An extra tooth put into a pair of gear wheels that would otherwise contain the same number of teeth, the object being to prevent the same teeth from always falling together.

Hypocycloid (hī-po-sī'kloid). A cycloidal curve in which the rolling circle is rolled within the fixed or base circle.

I

Idle pulley *or* **guide pulley.** A pulley employed to guide a belt.

Independent chuck. A chuck in which each jaw is operated separately

Index-plate. A plate having holes or notches accurately dividing a circle into equal divisions.

Inserted-tooth cutter. A cutter in which the teeth are inserted in a disk or head.

Inside calipers. Calipers used to measure inside dimensions, as boxes, recesses, etc.

Insulate. To cover electric conducting material with some non-conducting substance.

Intermediates. The wheels that are between the front driver and last follower of a train of gear wheels.

Involute. A curve generated by the path of a given point in a straight line, as the line is rolled upon a circle. (Vol. I. p. 31.)

J

Jack-plane. A plane employed to rough out the work.

Jig. A device for holding work and guiding the operating tool.

Jointing-machine. A machine for truing the surfaces of wood-work that are to form a joint.

Journal. That part of a shaft that runs in a bearing which guides or limits the motion of the shaft.

Jump *or* **upset.** To enlarge at the end by a forging process.

Jumper. A piece of electric cable about three feet long, covered with insulating tape or rubber tube.

K

Kerf. The passageway or slot cut by a saw.

Key. A rectangular wedge for locking two pieces together.

Knife. The cutting tool used on a wood-planing or wood-splitting machine.

Knurling-tool *or* **milling-tool.** A tool used to press indentations into the edges or upon the surface of metal, in order to increase the hand grip of it.

L

Land. That part of a tap or a reamer that lies between its plates and carries the cutting edges or teeth.

Lantern. A primitive form of gear in which rungs are used instead of teeth.

Lap. A grinding device consisting of a lead or other soft metal surface, on which emery and oil is used.

Lap-joint. A joint in which one piece overlaps the other.

Lap-weld. A weld in which both pieces are bevelled at the ends, and one end overlaps the other where the two are put together to weld.

Lathe. A machine that revolves work to be operated by cutting tools.

Lathe-bed. The frame that carries the head and tail stock of a lathe, and that rests upon a solid foundation.

Lathe-carriage. The sliding piece that carries the tool rest of a lathe.

Lathe-centre. The piece or part of a lathe that enters the coned recess of lathe work that is held between centres.

Lathe-saddle. The sliding piece that carries the tool rest of a lathe.

Lathe-shears. The frame of a lathe that carries the head and tail stocks, and that rests on legs.

Lead-screw. A screw for a lathe that is used for screw cutting only.

Left-hand thread. A screw thread in which the nut must be revolved in a direction opposite to that in which the hands of a watch move, in order that the nut may screw upon the bolt.

Leg-vise. A machinist's or blacksmith's vise having legs.

Line of centres. A line, real or imaginary, passing from one centre to another.

Line out. To mark on work lines denoting the depth of surface that is to be cut away.

Liner. A piece of iron put behind or upon a piece to take up its wear.

Line shaft. A shaft employed to transmit motion from an engine or motor to distant points.

Lines of force. Imaginary lines representing the direction in which the flow of magnetism takes place in the magnetic field of a dynamo.

Link. A piece having holes or pins at its end to connect two other pieces together.

Live centre. The centre of the live spindle of a lathe.

Live spindle. The revolving spindle of a lathe.

Loose. A term used to denote a part of a plate or saw that is not under tension.

Lost motion. Motion that is not transmitted on account of the looseness of the parts.

Lug. A small projection.

M

Machine-bolt. A bolt and nut of the sizes kept in stock by machinery dealers, the bolt usually being black or unturned.

Machine-screw. A small screw made to the Birmingham wire gauge.

Machine-tap. A long taper tap used in threading nuts in a machine.

Machine-tool. A machine that performs work by means of cutting tools.

Magnet. A metallic substance charged with magnetism.

Mandrel. 1. A cylindrical piece which is driven into hollow work and holds it while it is turned in the lathe. 2. A piece or bar on which work is driven or forced. 3. A shaft running in bearings.

Mangle-wheel. A gear wheel whose teeth are so arranged that the wheel is reciprocated back and forth on its centre, and does not make a full revolution.

Marking-gauge. A tool used by wood-workers to draw a line upon work.

Master-tap. A standard tap used for producing thread cutting tools, or kept as a standard of size.

Matched. A board that has a tongue on one edge and a groove on the other so that the edges of the boards will match or be fitted together.

Matching-machine *or* **matcher.** A wood-working machine which cuts a groove on one edge and a tongue on the other edge of a board or piece of work.

Measuring-machine. A machine for determining the measurement of a piece.

Micrometer (mī-krŏm'e-ter). A tool for measuring to minute fractions of an inch.

Mill-file. A single cut file used for filing sheet steel, saw teeth, etc.

Milling-cutter *or* **mill.** The cutter or cutting tool used in a milling-machine.

Milling machine. A machine in which revolving cutters are used to dress the surfaces of metal and cut them to size and shape.

Mitre-cutting machine. A machine for cutting mitre joints.

Mitre-joint. A joint at an angle of 45 degrees to the plane of the pieces it joins.

Mitre-wheel. A bevel gear having its teeth at an angle of 45 degrees to its shaft.

Mortise. A recess slot, usually square or rectangular, and employed to receive a tenon from another piece.

Motor. A dynamo used to drive other machinery.

Moulding-cutters. The cutters employed to produce mouldings on wood.

Multiple-drilling machine. A drilling machine in which more than one drilling-tool may be used, and separate and successive operations may be performed upon the work, carrying it from one drill-spindle to another.

Mute-pulley. A belt-guiding pulley that can be adjusted to various positions upon its stand.

N

Nail-bit. A boring tool for wood, used for cutting across the grain of wood.

Negative. The south pole of an electro magnet.

Neutral line. The line at which the commutator brushes stand when they take off electricity most advantageously.

North pole. That pole of an electro magnet which corresponds to the positive pole of a permanent magnet.

Nut. A threaded piece for receiving a screw.

O

Odontograph (ō-dŏn'-to-grăf). An instrument employed in making or drawing gear-wheel teeth.

Ohm's law. Current strength equals electromotive force divided by the resistance.

Oliver. A foot-power hammer used by blacksmiths, mainly for forging bolts or studs.

Open coil dynamo. One in which each coil is separated from the other coils of the armature.

Outside-calipers. Calipers used to measure external surfaces.

P

Panelling-machine. A machine for cutting mouldings upon panels.

Parallel-file. A file whose thickness is equal from end to end.

Parallel-vise. A vise in which the gripping face of the movable jaw is maintained parallel to that of the fixed jaw.

Paring-chisel. A wood-worker's chisel that is pushed to its cut by hand pressure.

Pattern-lathe. A lathe designed for the use of pattern-makers.

Pawl. A tongue that engages with a ratchet.

Pene (pēn) *or* **pane.** The lightest end of a hammer.

Pening (pēn'ing). The hammering of the surface of metal in order to stretch it and alter the shape of the piece.

Permanent magnet. One permanently charged with magnetism.

Pillow block, pillar-block, *or* **plumber-block.** A piece that affords a bearing for a shaft and is bolted to a pillar or frame.

Pin-block. A wooden block used to steady small pins when filed in the vise.

Pinion. The smallest wheel in a pair of wheels or in a train of gearing.

Pin-wrench. A wrench having a pin to enter holes in the nut.

Pipe-cutter. A hand tool for cutting pipe into lengths.

Pipe-die. A tool for cutting threads on pipes.

Pipe-tongs. A hand tool for gripping pipes.

Piston. 1. That part of a steam-engine that moves under steam pressure. 2. A disk that fits a bore and slides therein.

Pitch. The distance apart of two pieces.

Pitch-circle. A circle drawn through those parts in a gear wheel where the face of the tooth meets the flank, this circle representing the diameter of the wheel for calculations involving its velocity.

Pitch-line. A part of a pitch circle.

Pitman. A name sometimes given to a connecting rod.

Planer-shaper. A metal-cutting machine in which the ram or slide carrying the tool is moved after the manner of a planing machine.

Planimeter (pla-nĭm'e-ter). An instrument for finding the area of irregularly shaped plane surfaces.

Planing-machine. 1. For iron. A machine having a travelling work-table sliding in guideways, the tool being carried in a slideway that spans the table. Two or more slide-rests are used in the larger

sized machines. 2. Wood-planing machine. A machine in which the work is fed to a revolving shaft or head carrying long planing knives.

Platen. 1. A work-holding table. 2. The plane surfaced plate which presses on the type in printing.

Play. Looseness of fit.

Plug. The interior piece of a cock.

Plug-and-collar gauge. A pair of gauges for the same size. The plug being sometimes termed the male and the collar the female gauge.

Plug-tap. A tap that follows the taper taps and has but two or three of its teeth eased off at the end.

Plumb-bob. An instrument for denoting whether anything stands exactly vertical.

Plumb-level. A levelling tool depending for its accuracy on a weighted line and an edge that is straight.

Plumb-rule. A straight edge containing a plumb-bob.

Poles. Extremities of magnets; also, directions of electric currents.

Pod-bit *or* **nose-bit.** A wood-boring tool, having a cutting lip at its end.

Point. The surface or the extremity of a gear-wheel tooth.

Polishing-lathe. A lathe that is used for polishing and therefore requires no tool-carrying devices.

Positive. That pole of a permanent magnet which corresponds to the north pole of an electric magnet.

Poppet-head. The main head of a lathe.

Porter-bar. A bar for handling heavy forgings, which is welded to the forging and afterwards cut off.

Pressure-bar. A bar or piece that presses the work to the table in a wood-planing machine.

Pressure-indicator. An instrument for indicating the pressure of the electric current passing through a conductor.

Protractor. A tool having a blade which may be set to the degrees of a circle which are marked upon the back or stock of the protractor.

Pulley. A wheel that receives or drives a band, belt, or rope.

Pulley *or* **belt-pulley.** A wheel that drives or is driven by a belt.

Q

Quadrant. 1. A piece forming one-fourth of a circle. 2. A piece forming the segment of a circle.

Quick return. A motion by means of which a head ram or work-table is moved faster during its return traverse than during its cutting traverse.

R

Rabbet. A step at the end of a piece of wood.

Rabbeting-plane. A plane for rabbeting.

Rack. A straight body, having on it, (1) teeth corresponding to the teeth in the wheel that drives it or that it drives; (2) notches to engage a pawl or ratchet.

Rack-feed. A feed motor in which the work-table has a rack driven by a gear-wheel.

Rake. The inclination of the front face of a cutting tool to the body of the steel of which it is made.

Ratchet. A pawl or tongue one end of which engages in notches in a rack or wheel.

Ratchet-brace. A hand-drilling device, in which a lever carries a pawl that engages with a ratchet-wheel, which drives the drill.

Rat-tail file. A taper round file of small diameter or less than one-fourth of an inch.

Reamer, rymer, *or* **rimer.** A tool for smoothing and enlarging bores or holes.

Recut-file. A file whose original teeth have been ground off and new teeth have been cut.

Red-marking. A mixture of venetian red and common oil, used to put on a piece of work when trying its fit, and serving to denote the fit.

Residual magnetism. The magnetism which remains in an electro magnet after it has been charged with magnetism.

Resistance-box, rheostat, *or* **current regulator.** An instrument for regulating the pressure of an electric current.

Return-cam. A secondary cam used to move a piece back, after the main cam has moved it forward.

Reverse-keys. An arrangement of keys or wedges, that releases two pieces that have been keyed together.

Rib. A projecting strip usually employed to strengthen a piece, as the arm of a wheel.

Right-hand thread. A screw thread in which, with the end of the bolt towards you, the top of the nut must revolve from left to right like the hands of a watch in order to cause it to screw upon the bolt.

Rip-saw. A saw whose teeth are shaped to cut lengthways of the grain of the wood.

Rod-feed. A feed motion that is operated by a rod.

Roll-feed. A feed motion in which the work is fed to the cutting tool by revolving rolls.

Rope-socket. A socket in which the ends of a wire rope are secured.

Rose-bit. A reamer that cuts at the end only.

Rotary planer. An iron planing machine in which a number of cutters are set in a revolving face plate that is fed to the cut by a head on a slide.

Round-nosed chisel. A machinist's chisel whose cutting edge is shaped so as to cut a groove circular in cross-section.

Round-nosed tool. A tool whose cutting edge is circular in its course or length.

Routing-machine. A machine using a revolving cutter to cut away some parts of a surface and leave the rest in relief.

Rust-joint. A joint that is made by being filled with cast-iron cuttings mixed with sal-ammoniac and sulphur to cause the cuttings to rust and form a solid body.

S

Safe-edge file. A file having no teeth upon one of its edges.

Safety-catch holder. A brass bar with two binding screws attached; one to hold the wire, the other, a fuse or safety-catch, two such holders being placed beside one another.

Sanding *or* **sand-papering machine.** A machine in which sand-paper-covered rollers or wheels are used for finishing wood-work.

Saw-arbor. The arbor or mandrel on which a circular saw is driven.

Saw-bench. A circular saw machine.

Saw-gummer. A machine for deepening the spaces between saw teeth.

Saw-packing. Plaited hemp that is packed on both sides of a circular saw to warm it and equalize its tension when it is running.

Scale. 1. A rule or measuring device having lines of division upon it. 2. Proportion of size.

Scarf. The bevel of a piece of metal that is to be lap welded.

Scraper. A hand tool that scrapes rather than cuts the metal.

Screw-cutting lathe. A lathe that has a screw feed with change gears to enable it to cut threads or screws upon the work.

Screw-cutting lathe with independent feed. A lathe that has a lead screw for cutting threads and a separate feed motion for ordinary tool travers.

Screwing-machine. A machine used to cut screw-threads.

Screw-machine. A form of lathe in which the spindle is hollow and a revolving head or turret is employed to carry the cutting tools.

Screw-plate. A tool for cutting external threads on small work.

Screw-thread. The thread upon a screw or other piece of work.

Screw-tool. Another name for a chaser.

Scribing-block *or* **surface-gauge.** A tool that carries a needle or scriber for marking on work lines denoting its finished size or the amount of metal that is to be cut off, and that is also used for setting work.

Secondary main. A main electric line coming from the secondary coil of a converter and is the one on which the lamps are connected.

Second-cut file. A file whose teeth are coarser than a *smooth* file and finer than a bastard file.

Sector. A device used in connection with an index plate to denote the holes to be used in any particular division of a circle.

Segment. A piece having the shape of a segment of a circle, used for building up a hollow cylinder.

Segmental saw. A saw that is composed of parts secured to a frame or disk.

Self-acting lathe. A lathe having an automatic feed motion for the cutting tool.

Self-exciter. A dynamo that consumes a part of its own current to excite its own field magnets.

Series. As applied to a dynamo, means either series-wound, or running in series with one or more other dynamos.

Set. 1. The bend to one side of the body of the blade of the teeth of saws. 2. Adjustment or alignment. 3. Binding two pieces together.

Set-screw. A screw that binds or secures two pieces together by being screwed through one piece and against the other.

Shafting-rest. A slide-rest carrying several cutting tools and usually employed for turning shafting in the lathe.

Shake. A crack in timber.

Shank-mill. A milling machine cutter that is provided with a shank or stem.

Shaper-centres. A chuck in which the work is held between centres.

Shaper *or* **shaping-machine.** 1. A machine for cutting such surfaces on iron work as can be cut by a tool travelling in a straight line. 2. A wood-working machine in which cutting tools are revolved on an upright spindle projecting above a work table.

Shavings. The cuttings from a paring tool.

Shell. 1. The body of a steam boiler. 2. An outer casing.

Shell-reamer. A short reamer that is driven by fitting to a coned mandrel.

Shimer-heads. A form of cutter head for wood-working machines, in which circular cutters are used.

Shingle-saw. A saw thick in the body and bevelled off for about two or three inches of its outer diameter.

Shooting-board. A device upon which pieces are held when required to have their ends dressed to exact shape or angle.

Short circuit. The accidental or intentional forming of a shorter path for the passage of electricity.

Shrinkage-fit *or* **contraction-fit.** A means of securing two pieces together by leaving the hole of one too small to receive the other, and then expanding the piece containing the hole so that it will go on and bind fast as it cools and contracts.

Shunt dynamo. One in which a small percentage (say 2 per cent.) of the current generated in the armature, is shunted or passed into and through the coils of the field magnets, which are wound with fine wire so as to offer enough resistance to the flow of the current to prevent more than the above 2 per cent. of the current from passing or flowing through them.

Side-chisel. A machinist's chisel shaped to cut on the sides of slots or keyways, and having its cutting edge on one side of the end facet.

Side-tool. A tool used to cut the ends of lathe work that is held between the lathe centres.

Single-geared lathe. A lathe in which there is no back gear.

Single-riveted joint. A joint having but one row of rivets in a lap joint and one row of rivets on each side of the plate joint in a butt joint.

Single-thread. A screw thread having a single spiral.

Skew-bevel. A bevel gear wheel in which the teeth sides do not form lines radiating from the wheel centre, but point to one side of it.

Skew-chisel. A carpenter's chisel in which the cutting edge is not at a right angle to the body of the tool.

Skew-cutter. A cutter in which the cutting edge does not stand parallel to the axis of the shaft that drives it.

Slab. 1. A rough square piece of iron forged from scrap. 2. The first piece cut from the side of a log of wood.

Sleeve. An enveloping piece that is usually cylindrical and too long to be termed a ring.

Slide-valve. The valve that governs the admission of steam into and its exhaust out of a cylinder.

Slot. A rectangular passage or hole passing entirely through the material.

Slotting-machine. A machine having a vertical bar or ram that carries the cutting tool on its lower end and has a vertical reciprocating motion.

Smooth-file. The finest cut of file that is made for ordinary use.

Smoothing-plane. A carpenter's short plane for producing a smooth surface.

Socket. A piece that is hollow and receives another.

Socket-wrench. A wrench that envelops the whole of the head of a bolt.

Solenoid. An instrument composed of a hollow coil of conducting material charged with magnetism, and into which a bar of metal is drawn by the current.

Solid milled cutters. Cutters for wood-work, in which an irregular shaped cutting edge is obtained by recesses cut in the flat face of the cutter.

Space *or* **spaces.** The opening between the teeth of gear wheels.

Spanner. A form of wrench.

Sparking. Emission of sparks from brushes of a dynamo.

Spindle. A shaft that is used to transmit purely rotary motion, and that is usually of small diameter in proportion to its length.

Spiral cutter. A milling cutter having its teeth cut spirally and not parallel to the axis of its bore.

Spiral head. A device for holding work and revolving it in a milling machine.

Spirit-level. An instrument in which an air-space or bubble is utilized to disclose whether the surface upon which the spirit level is laid is horizontal.

Spline. A long feather-way.

Split-pin. A pin that is split so that its end can be opened out to prevent its coming out of place.

Spoke. The arm that connects the hub of a wheel to its rim or felloe.

Spoon-bit. A wood-boring tool that is shaped somewhat like a gouge.

Spring. 1. A piece of elastic metal. 2. The movement or deflection of a piece of metal on a tool, by its own weight or from the strain placed on it.

Spring-tool. A tool so formed as to have a slight give or spring to it.

Spur. A sharp cutting edge placed on some kind of wood-cutting tools to sever the fibre before the cutting edge removes the wood cuttings.

Spur-wheel. A gear wheel having its teeth upon its circumferential surface.

Square-centre. A lathe centre having four cutting edges at its coned end.

Square-thread. A screw-thread that is rectangular in cross-section.

Stanchion (stan'shun). A vertical frame.

Standard. An upright piece.

Standing-bolt. A bolt that screws into the work, and does not therefore require a nut.

Stave. 1. A piece that forms part of a hollow wooden casing. 2. A pin on a gear wheel that has pins instead of teeth.

Steady-rest *or* **back-rest.** A device for steadying work in the lathe.

Steam-boiler. A boiler used to generate steam and hold it at a pressure above that of the atmosphere.

Steam-hammer. A forging machine in which the hammer is raised or lifted by steam, and is sometimes also forced downwards by steam.

Steam-space. That part of the boiler that is above the level of the water.

Sticker. A machine that operates on wood of small cross-sectional area in proportion to its length, such as picture frame moulding.

Stock. Material.

Stocks-and-dies. Tools for cutting external threads by hand.

Stop. 1. A piece that arrests the motion of another piece. 2. A part of a gauge, against which the work abuts.

Stop-motion. A device for preventing the over-winding of clocks and watches.

Storage battery *or* **accumulator.** A set of perforated lead plates, immersed in a dense sulphuric acid solution. When charged with electricity the perforations fill with metallic oxides, which readily give off the electricity thus stored up.

Straddle-mills. Milling-machine cutters that are used in pairs and straddle the work, both cutters being of the same diameter.

Straight edge. A piece or strip having one or both edges made straight to use as a guide in testing work.

Stub end. The end of a connecting rod.

Stud. 1. A bolt that screws into the work at one end and receives a nut at the other. 2. A piece that screws into the work at one end.

Stuffing-box. The box in which a gland fits.

Surface-plate. A plate having a true flat surface to test the flatness of work by.

Swage. A blacksmith's tool for smoothing and shaping surfaces.

Swing-frame. A frame having a movable stud for carrying the change gears of alathe.

Swing-saw. A saw that is suspended in a swinging frame.

Switch. An instrument for connecting or separating the wires through which the current flows.

Swivel-vise. A vise that may be swiveled or revolved upon its base plate.

T

T *or* **tee.** A pipe fitting having two bores at a right angle, one to the other.

Tailstock *or* **tailblock.** That part of a lathe that carries the dead centre.

Tangent-wheel. A wheel whose teeth are formed to work with a screw or worm.

Tap. 1. A tool for cutting threads in holes or bores. 2. A device for shutting off or turning on the flow of water through a pipe.

Taper-tap. A tap that has part of the thread turned off in order that it may enter the hole easily and start to cut the thread. It is sometimes termed the first tap.

Tapped. 1. Threaded internally. 2. Having a connection that branches from the main pipe or flow.

Target. A frame used in setting shafting in line.

Temper. 1. The degree of hardness that has been imparted to steel by heating and suddenly cooling it. 2. A term employed by steel makers with reference to the percentage of carbon contained in steel.

Tempering. Tempering consists in reheating hardened steel and thus modifying or reducing its degree of hardness.

Template *or* **Templet.** A piece of metal made to shape, to serve as a pattern for one or more of the work surfaces.

Thread-gauge. A threaded cylinder or bore that serves as a standard of reference for the shape and diameter of a screw thread.

Threading-tool. A tool for cutting screws in the lathe.

Throw-line. The travel of a piece moved by an eccentric.

Thumb-nut. A nut so shaped that it may be screwed up or unscrewed by hand.

Tight. A term used to denote those parts of a plate or saw that are under undue tension, and prevent the other parts of the plate from lying flat.

Timber-planer. A wood-planing machine for thick work, usually having side heads as well as cutter bars.

Tire. The iron band surrounding a wheel rim.

Tit-drill. A drill having a point or teat, and employed to cut flat-bottomed holes.

Tool-post. The device employed in a slide-rest to grip the cutting tool.

Train. An arrangement of gear wheels in which there are more than two gear wheels employed.

Trammels *or* **tram.** A device for measuring distances too great to be measured by ordinary compasses.

Trip-hammer. A forging machine in which the helve or hammer holding beam is tripped by a revolving cam.

Trundle. A gear wheel having rungs in place of teeth.

Trying-up. A term usually employed to indicate that the work is accurately done or fitted.

Try-square. A tool having a rectangular back, and a blade whose edges are a right angle to the edges of the back.

T Slot. A slot or groove, shaped to receive a bolt head and prevent it from turning when the nut is screwed up.

Turnbuckle. A socket that receives and holds the ends of two rods and permits either to be revolved independently of the other, or the socket to be revolved without revolving either rod.

Turret-lathe. A lathe in which a revolving head or turret carries the cutting tools.

Tuyere (twē'ar). The nozzle through which air is forced into a blacksmith's fire, a furnace, or a cupola.

Twin-mills. Milling cutters that are used in pairs, and have teeth on their side faces as well as upon the circumference.

Twist-drill. A drill having a spiral flute along it.

Twist-hammer. A sawmaker's hammer having its two faces parallel, so that by turning it over in the hand its marks will be in opposite directions.

Two-jawed chuck. A chuck having two jaws.

U

Unit. A standard of measurement; thus, the unit for measuring engine power is the H.P.

Universal chuck. A chuck in which the jaws move simultaneously.

Universal joint. A joint or connection that permits a piece to be moved about in any required direction.

Universal milling-machine. A milling-machine that is capable of cutting spirals, and is provided with an index head.

Upright. A vertical post or frame.

U. S. Standard thread. A V-shaped thread having a flat place at the top and bottom.

V

Velocimeter. A speed counter.

Verneer (vĕr'ni-er). A measuring device in which two sets of lines of division are employed, one set being narrower spaced than the other, but so spaced that in a certain number of divisions the two end lines of each piece measure exactly alike; this provides a means of making a minute measurement.

Vise. A work-holding device in which one jaw is movable and the other stationary.

Vise-clamp. A piece of metal placed on the vise-jaw and passing between it and the work to prevent the jaw teeth from indenting the work.

Volt. The unit of electro-motive force, which is also called electrical pressure or tension, or difference potential.

Volt amperes *or* **Watts.** The product of the rate of flow of an electric current (the unit of which is the ampere) by the electrical pressure (the unit of which is the volt).

Volt-meter. An instrument for measuring the intensity of pressure of an electric current.

V-thread. A V-shaped thread, sharp at the top and bottom.

W

Warding-file. A thin file suitable for filing out the wards of the keys of door locks, etc.

Washer. A perforated disk of metal, usually forming a seating for some other piece as a rest or a pin.

Watts are volt amperes which express the amount of work performed by electricity.

Wheel-lathe. A lathe for turning wheels.

Whitworth's quick-return motion. A mechanism employed to move a cutting tool faster on its return than on its cutting stroke.

Whitworth's thread. A screw thread designed by Sir Joseph Whitworth, and having a rounded top and bottom.

Winding strips. A pair of straight edges, used to detect any wind or twist in surfaces that ought to be parallel.

Wing-nut. A nut having wings so that it may be screwed up with the fingers.

Wire-gauge. A gauge having notches in it that are standards of size for wire, for the thickness of sheet metal, for screws, etc., etc.

Worm-wheel. A wheel whose teeth are formed to work with a worm or screw.

Wrench. A tool for turning nuts, etc.

Y

Yoke. A piece that embraces two other pieces to hold them together, or adjust their distance apart.

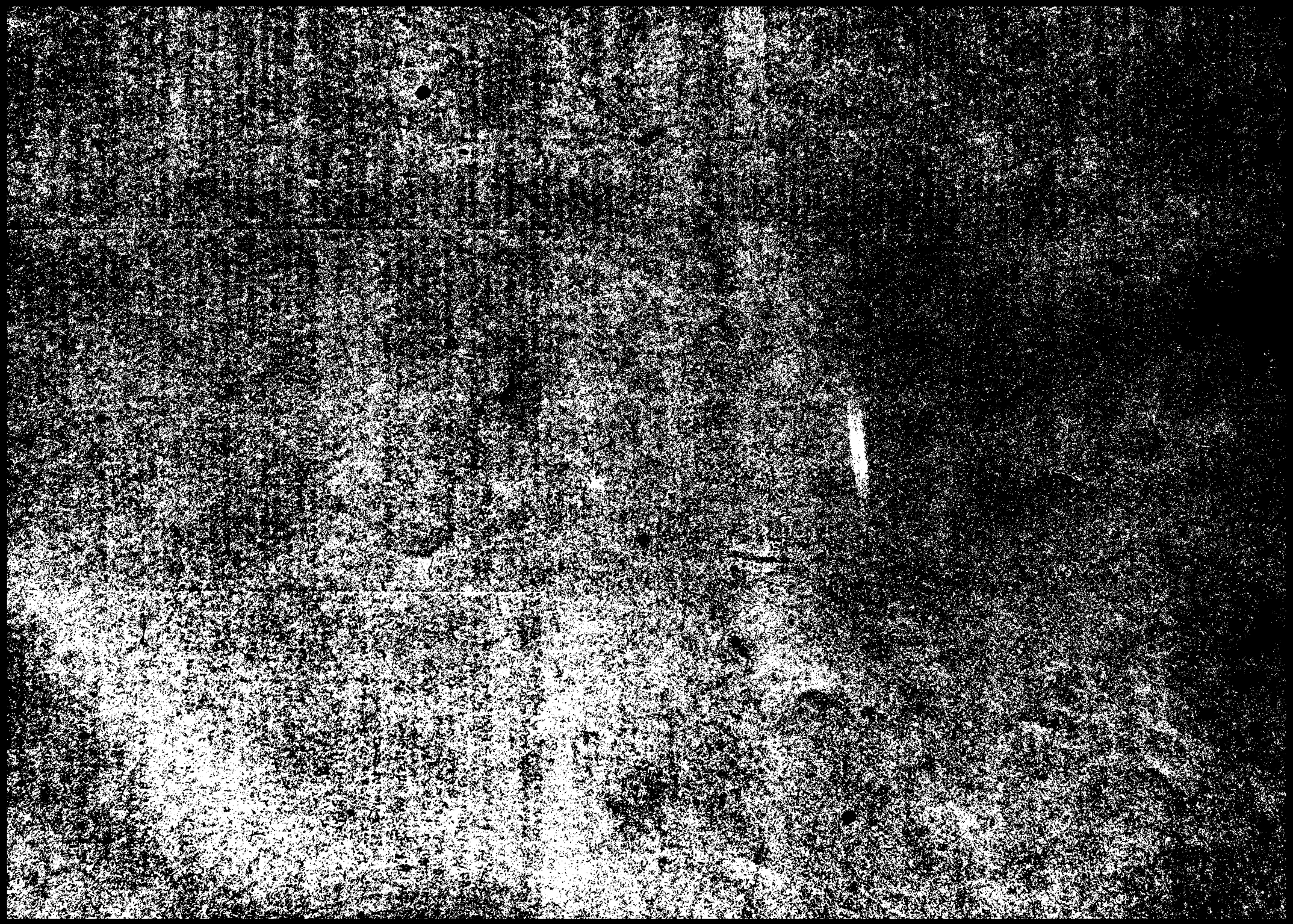

INDEX TO THE TWO VOLUMES.

A

Absolute steam pressure, ii, 443.
Absorption system, ii, 502.
Abutment cones, i, 409.
Accidents to locomotives, ii, 434.
Accurate standards, i, 341.
  grinding on lathe, i, 194.
Adjustable centre rest, ii, 14.
  chucks for true work, i, 235.
  cutters, i, 448.
    with half-round bit, i, 281.
  die stock, i, 448.
  drivers for bolt-heads, i, 224.
  end measurement gauges, i, 377.
  gap lathe, i, 154.
  or jamb dies, i, 98.
  reamers, i, 189, 284; ii, 99.
  shell reamers, i, 284.
  tap wrenches, i, 110.
  taps, i, 104.
  wrenches, various forms of, i, 125.
Adjusting connecting rod brasses, ii, 417.
  clutch rings, i, 153.
  commutator brushes, ii, 526, 527, 608, 609, 616, 621, 626.
  compound wound dynamos, ii, 610, 612.
  controlling valve, ii, 347.
  cut-off, ii, 319.
  exhaust valves, ii, 318.
  governors, ii, 348.
  length of connecting rods, ii, 126.
  main bearings, ii, 418.
  parts of a locomotive, ii, 436.
  throttle valve, ii, 347.
  water relief valves, ii, 495.
  wrist plate, ii, 318.
Adjustment of band saws, ii, 309.
  by differential screw, i, 118.
  of arc lamps, ii, 580.
  of lathes, i, 194.
Admission of steam to indicator, ii, 446.
  point of, ii, 408.
Advantages of face cutters, i, 108.
  of involute gear teeth, i, 34.
Air brake for locomotives, ii, 430.
Air chambers, ii, 420, 473.
Air pumps, ii, 363, 364, 473.
  attachment of buckets, ii, 381.
  breakages, ii, 380.
  care of, ii, 381.
  cotters and cotter holes, ii, 381.
  cross heads, ii, 380.
  trunk motions, ii, 381.
Aligning connecting rods, ii, 119, 124.
Alignment in crank pins, errors, ii, 169.
  of cranks, testing the, ii, 167.
  of lathe tail stocks, i, 145.
Allen valve, ii, 409.
Allowance, for contraction fits, i, 366.
  for hydraulic fits, i, 365.
Alteration of shape of threads from the wear of tools, i, 89.
Alternate connections of brushes, ii, 525.
Alternating dynamos, ii, 556.
Alternating current electrical machinery, ii, 556.
  act by induction, ii, 568.
  adaptation, ii, 568.
  adjoining poles, ii, 559.
  alternate positive and negative force, ii, 557.
  compared with continuous current, ii, 574.
  current cycles, ii, 569.
  currents react, ii, 556.
  cycle of the current, ii, 557.
  diagram of action, ii, 557.
  design, ii, 560.
  field coils, ii, 559.
  field exciter, ii, 559, 562.
  field magnetism, ii, 567.
  frequency of alternation, ii, 557, 558.
  generators as motors, ii, 567.
  high voltage, ii, 567.
  motors, ii, 567.
  mounting coils, ii, 560.
  multi-polar construction, ii, 558.
  poles, ii, 568.
  proper phase current, ii, 567.
  self exciter, ii, 560.
  simplicity of, ii, 556.
  single phase machine, ii, 558.
  special care of, ii, 610.
  starting, ii, 568.
  synchronous motors, ii, 568.
  three-phaser, ii, 558.
  two-phaser, ii, 558.
  two-phase 8-pole, ii, 559.
  variation of electromotive force, ii, 557.
  velocity, ii, 568.
Alternator, ii, 507.
  uses of, ii, 507.
Ammeter, ii, 624.
Ammonia, anhydrous, ii, 497.
  absorber, ii, 502.
  affinity for water, ii, 502.
  analyzer, ii, 502.
  charge, ii, 502.
  circulated in pipes, ii, 498.
  compressor-pump, ii, 501.
  condensation, ii, 498.
  cooling air, ii, 497.
  forced into pipes, ii, 498.
  liquid, ii, 500.
  pipes in cooling room, ii, 498.
  properties of, ii, 506.
  pumped out of pipes, ii, 498.
  still, ii, 502.
  street pipes, ii, 503.
  use in refrigeration, ii, 497.
  vapor compressed, ii, 498.
    liquefied, ii, 498.
Ampere, ii, 512.
  meter, ii, 594, 597.
Angle of clearance in lathe tools, i, 257.
  plate chucking, examples of, i, 251.
  plates for planer tables, i, 418.
Angles for the facets of scrapers, ii, 97.
  of cutting edges of chisels, ii, 74.
  of thread cutting tools, i, 91.
Angular advance of eccentrics, ii, 412.
  cutters, ii, 19.
  cutters for groove cutting, ii, 27.
  or helical teeth, i, 69.
  teeth, and thrust of, i, 69.
    herring-bone, i, 69.
  velocity of gear-wheels, i, 5.
Angularity of connecting rods, ii, 407.
Annular wheels, i, 1.
  compared with spur, i, 32.
Apparatus for oiling, ii, 471, 472.
Appliances for tapping standard work, i, 111.
Aprons, lathe, feed motion for, i, 168.
Apron tools for planers, i, 413.
Arbors, adjustable, i, 227.
  cutter, ii, 25.
  emery wheel, construction of, i, 198.
  expanding, i, 227.
  for eccentric work, i, 229.
    shell reamers, i, 283.
    threaded work, i, 228.
  lathe, i, 227.
Arc lamps, ii, 514.
  adjustments, ii, 580.
  arc, length of, ii, 584.
  at present, ii, 580.
  burning, ii, 580.
  carbons, ii, 580, 583, 610.
  care of, ii, 610.
  cleanliness, ii, 610.
  connections, ii, 580.
  dash-pots and rods, ii, 584.
  distribution of, ii, 625.
  dynamos, ii, 579, 610.
  feeding carbons, ii, 580.
    clutch, ii, 580.
    gear, ii, 582, 584.
    magnets, ii, 583.
    solenoid, ii, 583.
  inclosed, ii, 583.
  inspection, ii, 610.
  insulation, ii, 610.
  jump of current, ii, 580.
  management, ii, 610.
  open air, ii, 584.
  operated, ii, 580.
  originally, ii, 580.
  regulation, ii, 580.
  requirements for operation of, ii, 633.
    amperes of current, ii, 633.
    size of wire, ii, 633.
  voltage required, ii, 633.
  light, dynamos for, ii, 579, 610.
  of approach of gear-wheels, i, 13, 16.
  of contact of gear-wheels, i, 17, 25.
  of recess of gear-wheels, i, 13, 16, 20.
Area of the indicator diagram, ii, 451.
Armature, ii, 509, 517, 525, 573.
  advantages, ii, 517.
  clearance, ii, 524.
  coils, ii, 517, 616.
    attachments of, ii, 511.
    connections of, ii, 511.
    insulation, ii, 519.
    turns in, ii, 511.
  core, ii, 510, 517, 522.
  current in outer wires, ii, 5[illegible], [illegible]1.
  damp, ii, 616.
  drum, ii, 509, 511.
  drying out, ii, 616.
  handling, ii, 607, 617, 626.
  materials, ii, 522.
  protected, ii, 616.
  railway motor, ii, 517.
  ring, ii, 509, 510.
Armature, two-phase, ii, 616.
  winding, ii, 510, 527.
  wires become bars, ii, 514.
Arms for pulleys, ii, 279.
  pivoted, for tooth templates, i, 44.
Arresters, lightning, ii, 589, 624.
Artificial ice, ii, 504.
Atmosphere, influence of, on oils, ii, 153.
Attachment of air pump buckets, ii, 381.
  of valve to stem, ii, 378.
Auger bit, i, 453.
Augers for end-grain wood, i, 454.
Automatic air brake, ii, 430.
  cut-off engines, ii, 277-283, 455.
  engine drainage, ii, 338.
  engine, high speed, ii, 459.
  engine, straight line, ii, 460.
    wheel governors, ii, 459.
  expansion engines, ii, 229.
  feed motions, i, 128, 407; ii, 8.
Auxiliary cylinder, ii, 348.
Auxiliary valve, ii, 470, 471.
Ax handle lathes, i, 210.
Axle boxes, hot, ii, 435.
  locomotive, ii, 148.
  brasses testing, i, 366.

B

Babbitting boxes, methods of, ii, 155.
Babbitt-metal-lined boxes, ii, 155.
Back-gear of lathe, i, 135, 145.
  throwing in and out, i, 168.
  treble, i, 143.
Back-knife gauge lathe, i, 211.
Back rest, i, 233.
Balanced valves, ii, 246, 409.
Balancing emery wheels, ii, 39.
Balancing pulleys, ii, 202.
Ball turning, i, 325.
Banking fires, ii, 433.
Bar cutters, boring, i, 289.
  the shapes of, i, 291.
Bar iron, straightening, i, 305.
Barometer, graduation of, ii, 448.
  construction of, ii, 447.
Bars, boring, i, 289.
  boring, with fixed heads, i, 290.
Bar steel, forms of, for chisels, ii, 73.
Baudelot cooler, ii, 499.
Beading bits, ii, 270, 271.
Beam drill, i, 430.
Bearings, adjusting, ii, 418.
  dynamo, heat in, ii, 608.
  for lead screw, i, 139.
  of engine lathes, i, 134.
  of line shafting, ii, 166.
  surfaces of keys, i, 126.
  temperature, ii, 621.
  thrust of, ii, 477.
  various forms of, ii, 147.
  wear of, i, 158.
Beating and pounding, causes of, ii, 168.
Bedding brasses in their boxes, ii, 132.
Beds, planer, flat guideways for, i, 414.
  planer, oiling devices for, i, 415.
Belt feed, ii, 9.
  lacings, covers for, ii, 215.
    forms of, ii, 214.
  pumps, ii, 420.
  shifting mechanism, i, 406.
  stretching clamps, ii, 210.
Belts, bevelled joints for, ii, 215.
  bouncing of, ii, 379.
  care of, ii, 618.
  changing or shipping, ii, 217.
  driving power of, ii, 218-225.
  friction, coefficient of, ii, 222.
  grain side, weak, ii, 208.
    to pulley, ii, 209.
  guide pulleys for, ii, 211.
  lap joints for, ii, 215.
  length of, ii, 209.
  line of motion of, ii, 217.
  parts of hide used for, ii, 207.
  pegged, ii, 215.
  sag of, ii, 210.
  single and double, ii, 208.
  stretch of, parts of hide, ii, 208.
  tension of, ii, 211, 224.
  the creep of, ii, 222.
  torsional moment, ii, 223.
  V or angular, ii, 217.
Bench lathes, i, 130.
Bent files, use of, ii, 93.
Bevel gear teeth, originating, i, 22.
  pinion, drawings for, i, 59.
  protractors, i, 380.
  squares, i, 380.
  wheel, body pattern, i, 59.
Bevel wheels, i, 1, 21, 61.
  formation of the teeth of, i, 22.
  [illegible]ting the angle of, i, 60.
Bilge injection marine engines, ii, 473.
Billiard cues, steady rest for, i, 233.
Bipolar machines, ii, 514.
Birmingham wire gauge for gold and silver, i, 387.
Bisected gear teeth cutters, i, 36.
Bit, half round, 281.
Blacksmith's drilling levers, i, 456.
  temper, ii, 492.
Blade, form of, necessary to produce a given shape of moulding, ii, 77.
Blind port, ii, 320.
Blocks for filing pins, ii, 104.
  pillow for shafting, ii, 194.
Blotting paper, oil test, ii, 154.
Blowing down boilers, ii, 502.
Blow through valve, ii, 472.
Boiler, blowing down, ii, 402.
  cleaning, ii, 402.
  evaporative efficiency of, ii, 398.
  examining, ii, 490.
  factors of safety of, ii, 487.
  feeding, instruction upon, ii, 402.
  feed water, ii, 402.
  fire cleaning, ii, 401.
    cleaning tools, ii, 401.
  for stationary engine, ii, 382
  gauge cocks, ii, 400.
  grate bars, ii, 401.
    bars, shaking, ii, 401.
  horizontal, return tubes, ii, 393.
  internally fired, ii, 390.
  lighting the fire under, ii, 400.
  plate, the strength of, ii, 383.
  seams, diameter of rivets, ii, 388.
    treble riveted, ii, 385.
  settings, ii, 396, 398.
  shells, drilling machines for, i, 436.
    the strains on, ii, 383.
    the strength of, ii, 382.
  strains on, ii, 387.
  the care and management of, ii, 400.
  tubes, for fire engines, ii, 463.
  vertical, ii, 391.
    external uptakes, ii, 393.
  water gauge glass of, ii, 400.
  with Field tubes, ii, 491.
Boiler fitting joints, ii, 140.
Boilermaker's drilling machine, i, 435.
  drilling machine, feed motion, i, 436.
  turning machine, i, 435.
Boilers, low water in, ii, 402.
  of marine engines, ii, 498, 499.
  of steam fire engines, ii, 463.
  priming in, ii, 402.
Bolt cutter, i, 469.
Bolt-cutting machine, head of, i, 469.
  dies, i, 473.
  double headed, i, 469.
  rapid, i, 467.
  the construction of dies for, i, 473.
  with automatic stop motion, i, 466.
    back gear, i, 467.
Bolted connecting-rod straps, ii, 116.
Bolt-heads, i, 117.
  adjustable drivers for, i, 224.
  bedding, i, 117.
  filing, ii, 105.
Bolt-holes, classification of, i, 112.
Bolts and nuts, table for, i, 114.
Bolts, classification of, i, 112.
  countersunk, i, 112.
  for foundations, forms of, i, 113.
    planer tables, forms of, i, 417.
  forms of drivers for, i, 224.
  hook, i, 113.
  rapid construction of, i, 468.
  removing corroded, i, 122.
Bolt-threading machinery, i, 468.
  capacity of, i, 471.
  construction of, i, 468-472.
Boosters, electrical, ii, 578.
  action, method of, ii, 579.
  voltage increase, ii, 579.
  voltage loss, ii, 578.
Bore gauge, i, 387.
Boring and turning mill or lathe, i [illegible]
  221.
  bar, centres for, i, 293.
    cutters, i, 289.
    cutters, shapes of, i, 291.
  bars, i, 289.
    for taper work, forms of, i, 292.
    three or four cutters for, i, 290.
    with fixed heads, i, 290.
    with sliding heads, i, 290.
  double-coned work, i, 293.
  end grain wood, augers for, i, 453.
  head with nut feed, i, 291.
  heads, i, 288.
  lathe for engine cylinders, i, 219.
    with double heads, i, 220.
    with traversing spindle, i, 218.
  machine, heavy upright, i, 221.
  mill, [illegible] 211.
  purposes, chucking lathe for, i, 151.

Boring small holes very deep, i, 278.
tool holders, i, 287.
tools for brass, lathe, and small work, i, 285–287.
octagon, holders for, i, 175.
the spring of, i, 286.
Boring-machine, i, 432.
for car wheels, i, 438.
horizontal, i, 433.
pulley, i, 438.
the feed motion of, i, 432.
universal, i, 438.
Boxes too tight, ii, 531.
Box wrenches, i, 124.
body chucks, i, 237.
tools for screw machines, i, 208.
Brace drill, i, 455.
with multiplying gear, i, 456.
ratchet motion, i, 456.
Brad awl, i, 452.
Brake for lathe pulley, i, 149.
for pattern lathe, i, 149.
lathe, i, 151.
Branch pipe core boxes, ii, 286.
Brasses, fitting to their journals, ii, 145.
Brasses for connecting rods, adjusting, ii, 120–127, 130–132.
lead lined, ii, 148.
oil cavities for, ii, 150.
open, ii, 149.
various forms of, ii, 127, 147.
Brass work, boring tools for, i, 286.
front tools for, i, 264.
hand tool for roughing out, i, 332.
side tools for, i, 264.
special lathes for, i, 217.
Breakdowns of engines, ii, 377–381.
Breast drill with double gear, i, 456.
Brine system, ii, 500.
tank for freezing, ii, 503.
Broaches, construction of, i, 479.
Broaching press, i, 478.
Broken frames, repairing, ii, 178.
Brushes, commutator, ii, 525.
adjustment of, ii, 526, 527, 608, 609, 616, 621, 626.
angle on, ii, 608.
bearing on commutator, ii, 626.
cable connection of, ii, 526.
connections of arms, ii, 622.
clockwise, ii, 622.
counter clockwise, ii, 622.
copper plated, ii, 622.
finding polarity of, ii, 622.
fitting to commutator, ii, 621.
held in movable spider, ii, 525, 530, 534.
insulation of, ii, 526.
locking device, ii, 530.
regulating, ii, 525.
Built-up gear wheels, i, 61.
Burnishing lathe work, i, 311.
Bushing used as keys, i, 116.
Bus lines, ii, 602, 605.
Butt joints, boiler, ii, 384.
By-pass valve, ii, 359.

C

Calculating the horse power of engines, ii, 439, 451.
horse power by indicator diagrams, ii, 450, 451.
revolutions of, and power transmitted by, gear wheels, i, 5.
strength of gear teeth, i, 65.
strength of riveted seams, ii, 386.
Calculations, safety-valve, ii, 441.
Calender roll lathe, i, 198, 215.
Caliper, the micrometer, i, 354.
Calipers, compass, i, 378.
for measuring thread, i, 95.
holding and using, i, 361, 362.
inside, i, 360.
spring, i, 360.
with locking devices, i, 360.
Cam chuck, for irregular work, i, 328.
motion for an engine slide-valve without steam lap, i, 83.
motions, applications of, i, 327.
for engines, i, 83.
return or backing, i, 82.
rods (Corliss), ii, 319.
Cams, finding the pitch line of, i, 80.
finding the working face of, i, 80.
originating in the lathe, i, 326.
return, finding the shapes of, i, 82.
Capacity of pumps, ii, 420.
of thread cutting machine, i, 471.
Cape chisels or cross-cut chisels, ii, 74.
Car axle lathe, i, 147.
the feed motions of, i, 148.
Carpenter's chisel, ii, 77.
Carriages, lathe, testing, ii, 182.
for lathes, i, 137, 145, 170.
Carriers, lathe, i, 222.
Car wheels, boring machine for, i, 438.
Case-hardening, ii, 128, 474.
finished work, ii, 129.
preparing work for, ii, 129.
Cast gear, contact of the teeth of, i, 67.
iron, internal strains, i, 306.
teeth, contact of, i, 67.
scale for curves of, i, 51.
side clearance, i, 53.
Cat head, i, 233.
steady rest, i, 233.
Caulking tools, ii, 141.
Cement chuck, i, 242.
Cements used in the manufacture of emery wheels, ii, 38.
Centre bit, i, 454.
dead, methods of removing, i, 159.
drill and countersink, i, 300.
chuck, i, 302.
drilling lathe attachment, i, 300.
chucks for, i, 303.
machine, i, 300.
live, removing, i, 159.
of rough work, i, 301.
punch, i, 300.
guide, i, 301.
rest, i, 194.
Centres for boring bars, i, 293.
for hollow work, i, 226.
lathe, i, 296.
shaping machines, i, 397.
taper work, i, 226.
live, tapers for, i, 159.
Centrifugal governor, ii, 345.
Centring devices for crank axles, i, 230.
machine, i, 304.
needle bars, etc., i, 335.
special shapes, i, 335.
square, i, 300.
work with the scribing block, i, 301.
Chain riveted joints, ii, 384.
Change gears, arrangement of, i, 319.
gears, compounded, i, 321.
table for finding, for screw cutting, i, 180.
Change gears, hanging, i, 158.
wheels, pitches of teeth, i, 182, 321.
Changing or slipping belts, ii, 217.
Chasers, errors in applying, i, 336.
forms of, i, 268.
holders, i, 157, 268.
improved form of, i, 90.
outside and inside, i, 335.
produced by milling, i, 158.
setting, i, 268.
Check valves, ii, 388.
Chill room, ii, 499.
Chisels, angle of presentation, ii, 77.
angles of cutting edges, ii, 74.
cape or cross-cut, ii, 74.
carpenter's, ii, 77.
cow-mouthed, ii, 75.
curved or oil groove, ii, 76.
cutting ends of, ii, 74.
diamond point, ii, 76.
dimensions of, ii, 74.
holders, ii, 74.
machinist's application of, ii, 76.
round-nosed, ii, 76.
shapes of cutting edges, ii, 74.
the use of, ii, 76.
Chucking device for pulleys, i, 318.
devices for planer tables, i, 408.
errors in, i, 250.
lathe for boring purposes, i, 151.
simple form of, i, 154.
with improved reversing clutch, i, 154.
machine beds, on a planer, i, 421.
on angle plates, i, 251.
reamers, for true work, i, 283.
the halves of large pulleys on a planer, i, 422.
Chucking machine, horizontal, i, 154.
Chucks and chucking, i, 234.
Chucks, box body, i, 237.
cement, i, 242.
combination, i, 237.
independent, i, 241.
cone, i, 232.
contracting, for lathes, i, 188.
Cushman, i, 241.
drill, i, 235, 446.
drill-holding, construction of, ii, 41.
expanding, i, 188, 241.
for centre-drilling and countersinking, i, 303.
large planing machines, i, 422.
milling machines, ii, 31.
screw machine, i, 205.
straightening wire, i, 305.
true work, adjustable, i, 235.
wood-working lathes, i, 242.
geared, scroll, i, 235.
grinding thin saws, i, 194.
independent, i, 238.
planer, for curved work, i, 420.
planer, for grooved work, i, 419.
reversible jawed, i, 237.
special forms of, i, 234–241.
swivelling, i, 395.
tailstock for drilled work, i, 279.
the wear of, i, 240.
three and four jawed, i, 237.
two-jawed, i, 236.
universal, i, 238.
various forms of, i, 394.
vise, for vise work, i, 396.
holding taper work in, i, 394.
rapid motion, i, 396.
Circle, dividing the, i, 348.
rolling, for change gears, i, 16.
Circuit breaker, ii, 545, 588, 602, 621.
advantage, ii, 589.
automatic, ii, 624.
construction, ii, 588.
double-pole, ii, 589.
principle of operation, ii, 588.
putting in, ii, 620.
Circular cutters, i, 272; ii, 22.
cutters, tool holders for, i, 272.
cutting tools, i, 267.
Circular slide valves, ii, 409.
Circulating pumps, ii, 355, 363, 472.
Circumferential seam strength, ii, 388.
Clamp couplings, ii, 197.
Clamping work on face plates, i, 245.
Clamps, belt, ii, 210.
chucking, i, 245.
for steady rests, i, 233.
polishing for lathe-work, i, 311.
Classification of bolts, i, 112.
of bolt heads, i, 112.
of lathes, i, 129.
of measuring tools, i, 354.
Cleaning boilers, ii, 402.
emery wheel, ii, 47.
files, ii, 94.
Clearance in cast gear teeth, i, 53.
of front tools, i, 254.
of planer tools, i, 424.
of taps, i, 102.
of tools for square threads, i, 269.
of twist drills, i, 274, 275.
on cutter, ii, 35.
Clements driver, i, 223.
Clinker hook, ii, 369.
Clip-ended connecting-rod, ii, 115.
Clock wheels, i, 21.
Clutches, friction, ii, 192.
Clutch rings, adjusting, i, 153.
Coal consumption, ii, 364.
Cocks and plugs, grinding, ii, 144.
drain, ii, 344.
leaky, ii, 145.
relief, ii, 344.
Cogged gear wheels, i, 63.
Cogs, durability of, i, 66.
method of fastening, i, 63.
strength of, i, 66.
thickness of, i, 66.
Coils formed, ii, 516.
holding in place, ii, 519.
insulation of, ii, 516.
Cold-rolled shafting, ii, 187.
Collapsing tap, screw machine, i, 107.
taps, tapping machine, i, 107.
Collar gauges and standard plug, i, 356.
for threads, i, 91.
testing, i, 356.
Collars for shafting, ii, 189.
Color tempering, ii, 492.
Combination chucks, i, 237, 241.
turret lathe, i, 154.
Combined centre-drill and countersink, i, 300.
cutting-off tools and holders, i, 273.
drilling machine and lathe, i, 343.
Commutator, ii, 507 519, 525, 527.
advantage of two, ii, 527.
brushes, ii, 509.
adjustment of, ii, 526, 527, 608, 609, 616, 621, 626.
brush, care of, ii, 519, 520.
care of, ii, 626.
construction of, ii, 509.
insulation of, ii, 509, 519, 608.
outside of armature, ii, 520.
requisites of, ii, 519.
ring of fire around, ii, 609.
segments, ii, 510, 521, 522.
sparking, ii, 519.
surface in best condition, ii, 608.
two, ii, 527.
wide face, ii, 527, 534.
Commuter, ii, 614, 616.
Compasses, i, 377.
Compound engines, ii, 327–377, 466, 467.
Allis, ii, 351, 355.
Ball, ii, 376.
Buckeye, ii, 366–374.
high speed Raworth, ii, 336–339.
McIntosh Seymour, ii, 377.
object of, ii, 328.
Peache's high speed, ii, 376.
pumping, ii, 355–366.
tandem, ii, 327.
triple expansion, ii, 376.
Willans central valve, ii, 339–348.
Compound slide rest, i, 140.
tool holders for, i, 174.
Compound winding, ii, 512.
Compounded gears, i, 320.
Compression curve of engines, ii, 454.
Compression curve, ii, 447.
alternate, ii, 376.
economical, ii, 262, 267.
line, ii, 447.
of ammonia vapor, ii, 498, 499.
the point of, ii, 408.
Compressor pump, ammonia, ii, 501, 502.
Condensation in heating circuits, ii, 357.
Condenser, total pressure in, ii, 476.
Condensers, ii, 355, 364, 499.
Condensing engine diagram, ii, 447.
Cone chuck, i, 232.
auxiliary cylinder, ii, 348.
Connecting rods, adjusting, ii, 126.
angularity of, ii, 407.
brasses, adjusting, ii, 418.
joint faces of, ii, 122.
lining up, ii, 126.
double gibbed, ii, 116.
ends, tapered, ii, 117.
fitting up, ii, 118.
keys, ii, 407.
keyways, filling out, ii, 120.
locomotive, ii, 115.
length of, ii, 123.
marine engine, ii, 116.
marking length of, ii, 123.
repairing, ii, 125.
setting up keys of, ii, 126.
solid-ended, ii, 114.
Connecting rods, strap-ended, ii, 115.
straps, ii, 120.
bolted, ii, 116.
stepped, ii, 117.
trammelling the length of, ii, 122.
various forms of, ii, 117.
welding up stub ends of, ii, 119.
Constant current machines, ii, 507, 512, 514.
Constant potential machines, ii, 507, 512, 514.
Construction of commutator, ii, 509.
of groove cams, i, 84.
of lathe carriages, i, 137.
of emery wheel arbors, i, 198.
of slide valves, ii, 376.
of tailstock of engine lathe, i, 135.
of the barometer, ii, 447.
Contact of cast teeth, i, 67.
of spur teeth, ii, 380.
Continuous current booster, ii, 578.
Contracting chucks for lathes, i, 188.
Contraction or shrinking fits, i, 366.
Controllers, ii, 613.
brake position, ii, 615.
circuit never opened, ii, 615.
circuits through commuter, ii, 615.
commuter, ii, 614.
footbed wheel, ii, 615.
interchangeable parts, ii, 615.
movable stop, ii, 615.
reverser, ii, 613.
speeds of, ii, 613, 615.
Controlling cylinder, ii, 376.
Convection, ii, 444.
Conversion of heat into work, ii, 443.
Converter, rotary, ii, 577.
construction, ii, 577.
transforming, ii, 577.
Cooler, Baudelot, ii, 499.
Cooler, oil, ii, 499.
Cooling room, pipes in, ii, 498.
disks, ii, 499.
Core of armature, ii, 522, 524.
Core boxes, for branch pipes, ii, 286.
Core box plane, i, 269.
Cored work, drivers for, i, 225.
Corliss engine, ii, 277, 283, 455, 456.
addition to usual, ii, 353.
governor connection, ii, 282.
valve, lap of, ii, 458, 459.
valve gear, ii, 279, 282, 456, 457.
Correcting the errors of thread pitch caused by hardening, i, 109.
Corroded bolts, removing, i, 122.
nuts, removing, i, 122.
Cotter, keyway drilling machine, i, 438.
drills, i, 446.
Cotters and cotter holes, ii, 381.
Counterbore and drill, i, 449.
Countershafts, i, 409; ii, 191.
Countersink cutters, i, 449.
Countersink, for hardened work, i, 303.
for lathe work, i, 302.
with adjustable drill, i, 300.
Countersinking, chucks for, i, 303.
Countersinks, i, 285.
Countersunk bolt heads, i, 112.
Coupling for light shafting, ii, 198.
plate, ii, 196.
universal, ii, 199.
Couplings, clamp, ii, 197.
for line shafting, ii, 194.
for split sleeves, ii, 195.
self-adjusting, ii, 196.
Covers for belt lacings, ii, 215.
Cow-mouthed chisel, ii, 75.
Crank axles, centring-devices, i, 230.
drill, i, 457.
motion for shaping machines, i, 401.
simple, i, 13.
Crank pin aligning, errors, ii, 158, 170.
position, ii, 239.
remedying errors of, ii, 171.
riveting, ii, 73.
Crank-pins, hot, ii, 418.
Crank position, engine starting, ii, 416.
examining, ii, 345.
in two sections, ii, 358.
setting eccentrics on, ii, 174.
Cranks, special lathe chuck for, i, 248.
testing the alignment of, ii, 167.
Creep of belts, ii, 211.
Cross-bar, construction of, i, 412.
Cross-cut or cape chisels, ii, 74.
Cross-feed motion, construction, i, 138.
Cross-files, ii, 91.
Cross-filing, ii, 92, 93.
Cross-head chucking, i, 251, 253.
construction, ii, 314.
weakness, ii, 381.
Cross-heads of steam engines, ii, 314, 407.
Crowding of cutters, to avoid, ii, 27.
Crowned pulleys, ii, 200.
Crowns of brasses, shapes of, ii, 127.
Crown wheels, i, 1.
Current conveying, ii, 574.
cycles, ii, 569.
direction and course of, ii, 626.
Eddy, ii, 523.
excessive, ii, 545.
increase, ii, 609, 628.
maintained, ii, 627.
pulsating, ii, 616.
Curve of expansion of indicator diagrams, ii, 446.
of gear wheel teeth, variation, i, 12.
Curved or oil groove chisel, ii, 76.
work, planer chuck for, i, 420.
work, turning, i, 314, 315.

Curves, compression, ii, 263, 447.
expansion, ii, 262, 263.
marking, by hand, i, 45.
of gear teeth for bevel gear, i, 22.
machine for generating, i, 36.
templates for, i, 384.
Cut, and kinds, of rasps, ii, 87.
of files, ii, 86.
gear-wheel teeth, strength of, i, 65.
Cut-off, adjusting, ii, 249–262.
eccentric, ii, 353, 366.
eccentric, position of, ii, 249–262.
engines, ii, 455.
equalizing, ii, 251–254.
faulty, neutralized, ii, 349.
gear, ii, 229.
high pressure, ii, 358.
sleeve, ii, 346.
testing, ii, 347.
the point of, ii, 329, 371, 408.
valve, ii, 367, 369, 376, 410.
varying, ii, 254, 262.
Cutter and reamer grinder, ii, 45.
adjustable, i, 448.
adjustable on half-round bit, i, 281.
angle for worm wheels, i, 43.
angle of, for spiral grooves, ii, 29.
arbors, ii, 25.
boring-bar, the shapes of, i, 291.
clearance of, ii, 35.
grinding taper, thin edge, ii, 33.
cautions against accidents, ii, 47.
revolving, for gear teeth, i, 37.
Cutters, angular, ii, 18.
angular, grooving, setting of, ii, 28.
circular, ii, 22.
countersink, i, 449.
crowding, to avoid, ii, 27.
drawing temper of teeth, ii, 47.
face, ii, 17.
fly, ii, 21.
for drilling machines, i, 442.
standard shapes, i, 111.
gang or composite, ii, 23.
holders for fly, ii, 12.
matched, ii, 73.
milling, ii, 16.
milling, errors in grinding, ii, 32.
parallel, fixture for grinding, ii, 32.
right and left hand, ii, 18.
shank, ii, 19.
single, for gear teeth, i, 28.
sizes of, ii, 17.
spiral, grinding teeth of, ii, 36.
tube-plate, i, 448.
twin, ii, 18.
with inserted teeth, ii, 24.
with spiral teeth, ii, 17.
Cutting cams in the lathe, i, 326.
coarse pitch square threads, i, 269.
double threads, i, 322.
edge of chisels, angles of, ii, 74.
of chisels, shapes of, ii, 74.
on drills, clearance, ii, 43, 44.
edges for dies, number of, i, 471.
for taps, number of, i, 105.
ends of chisels, ii, 74.
feeds for wrought iron, i, 294.
files, ii, 101.
grooves in cylindrical work, ii, 27.
helical teeth in the lathe, i, 69.
keyways by hand, ii, 108.
left-hand threads, i, 322.
keyways by drifts, ii, 109.
steam ports, jigs for, i, 441.
right and left hand grooves, ii, 29.
right or left hand thread, single, double, or treble, with same dies, i, 99.
screws by the metric system, i, 322.
screw thread by hand, i, 62.
speeds, examples of, i, 295.
for threading dies, i, 474.
for wrought iron, i, 294.
taper threads, i, 338.
threads, multiple, i, 322.
on taper work, i, 324.
tools, circular, i, 267.
producing gauges for, i, 92.
power required to drive, i, 273.
the utmost duty of, i, 258.
wheels, angle of cutter for, i, 43.
worm-wheel teeth in the lathe, i, 42.
Cutting off machine, i, 193.
tool for screw machines, i, 208.
in foot block, i, 151.
tools, i, 262, 273.
Cycloidal curves for gear teeth, i, 8.
Cylinder boring lathe with facing slide rests, i, 219.
condensation, ii, 265, 328.
cover joints, ii, 137.
cover, turning a, i, 318.
ends, scraping out, ii, 161.
heads, knocking out, ii, 434.
poppet valves, ii, 357.
pressure, ii, 328.
Cylinders, bores of, ii, 404.
clearance in, ii, 404.
condensation, ii, 331.
connecting, auxiliary, ii, 348.
construction, ii, 360.
controlling, ii, 376.
counterbore of, ii, 404.
exhaust closing, ii, 267.
for steam engines, ii, 404.
high pressure, ii, 335.
intermediate, ii, 335.
jacketed, ii, 406.
lagging, ii, 406.
low pressure, ii, 330
Cylinders, lubricating, ii, 405.
proportions, ii, 328–336.
ratios of, ii, 336.
reboring in place, ii, 160.
relay, ii, 347.
relief valves for, ii, 405.
steam ports of, ii, 405.
steam jacketed, ii, 355.
heating jackets, ii, 355.
support, ii, 360.
unjacketed, ii, 336.
waste, ii, 330.
waste swept down by exhaust steam, ii, 340.
waste water cocks of, ii, 405.
wear of, ii, 404.
Cylindrical work, cutting grooves, ii, 27.

D

Dampness in electrical machinery, ii, 609.
Dancing governors, ii, 384.
Dead-centre, finding the, ii, 174.
methods of removing, i, 159.
of the crank, finding the, ii, 172.
Deflection of surface plates, ii, 135.
Depth of gear wheel teeth, i, 42.
Designing slide valves, ii, 414.
electric generators, ii, 525, 526.
Detachable slide rest, i, 143.
Determining the pitches of the teeth for change wheels, i, 182.
Developing electric current, ii, 568.
Diagram, theoretical, ii, 446.
the uses of, ii, 445.
Diagrams for condensing engine, ii, 447.
indicator, ii, 446.
defective, ii, 453.
of port openings, ii, 372.
of valve motions, ii, 235, 238.
Diameter at the roots of threads, i, 269.
of circle for generating curves of gear teeth, i, 10.
of the pitch circle of wheels, i, 1.
method of finding exact, i, 160.
Diameters of line shafting, ii, 189.
Diametral clearance, twist drills, i, 274.
Diamond point chisel, ii, 76.
Diamond pointed lathe work tool, i, 254.
Dictionary of work-shop terms, ii, 649.
Die stock, pipe-threading by hand, i, 463.
by power, i, 463.
Dies, adjustable, i, 98.
for finishing square threads, i, 269.
for gas and steam pipes, i, 101.
or chasers in the heads of bolt-cutting machines, i, 463.
the wear of, i, 89.
Dies with four cutting edges, i, 100.
Differential threads for locking, i, 118.
Direct expansion system, ii, 498.
Displacement of pumps, ii, 419.
Distance between bearings of line-shafting, ii, 186.
Dividers, i, 377.
Dividing device for circle, i, 352.
engine, i, 349.
Division of the circle, i, 348.
Dogs, lathe, various kinds of, i, 222.
movable for face-plate work, i, 250.
Donkey engines, ii, 269, 474.
Double beat valves, ii, 475.
axle lathe, i, 154.
eye, filing of a, ii, 103.
eyes, fitting pins in, i, 121.
gibbed connecting rod, ii, 115.
generator, ii, 534.
heads for planing machines, i, 404.
ported slide valves, ii, 409.
rapid bolt threading machine, i, 467.
riveted lap joint, ii, 384.
spindle milling machine, ii, 16.
threads, cutting, i, 322.
tool holder for slide rest, i, 169.
Double column drill, i, 430.
Double-coned work, boring, i, 293.
Double-ported valves, ii, 242, 245, 257.
Draught of keys, i, 116.
Draw filing, ii, 93.
Drawing the temper, ii, 47, 494.
Drawings for bevel pinion, i, 59.
for gear wheels, i, 59.
Drifts, forms of, ii, 109.
methods of using, ii, 160.
Drill, and counterbore, i, 449.
boiler-maker's, i, 428.
brace, i, 445.
universal joint for, i, 456.
with multiplying gear, i, 456.
with ratchet motion, i, 456.
chucks, i, 235, 446; ii, 41.
cranks, i, 457.
double column, i, 430.
foot or lever feed, i, 428.
for stone, i, 454.
for wood work, i, 449.
grinding, varied for diameter, ii, 41.
conditions for all diameters, ii, 41.
holders, flat, for lathe work, i, 281.
holders, twist, i, 274.
machine, grinding, ii, 41.
position, for all drills, ii, 41.
post, i, 430.
sensitive, i, 428.
shanks, i, 445.
shank, improved form of, i, 446.
Drill, sockets, i, 445.
with cord, i, 455.
with spring motion, i, 455.
Drilled work, tailstock chucks for, i, 279.
Drilling and boring machine, i, 432.
device for lock work, i, 459.
engine cylinders, jigs for, i, 440, 441.
feed motion of, i, 432.
hard metal, i, 445.
Drilling holes true to location with flat drills, i, 442.
levers for blacksmith, i, 457.
square holes, device for, i, 450.
taper holes, i, 451.
three or four holes at once, i, 438.
and turning machine for boiler makers, i, 435.
machine, and lathe combined, i, 433.
cotter or keyway, i, 438; ii, 71.
feed motion of, i, 429, 430, 432, 436.
for boiler shells, i, 436.
for car wheels, i, 438.
four-spindle, i, 434.
hand, i, 459.
lever feed, i, 429.
reversing feature, i, 427.
tapping device, i, 427.
three-spindle, i, 434.
with automatic motions, i, 430, 431.
with counterbalanced spindle, i, 429.
with guide for boring bar, i, 430.
with quick return, i, 430.
with swivelling spindle head, i, 431.
with tapping attachment, i, 430.
machines, counterbores for, i, 449.
cutters for, i, 447.
double column, i, 431.
drills for, i, 442.
fixtures for, i, 439.
flat drills for, i, 442.
jigs for, i, 439.
radial, i, 430, 431.
stocks for, i, 447.
turret, i, 426.
universal, i, 438.
Drill press, i, 429.
with automatic stop, i, 430.
Drills and cutters, i, 442, 447.
beam, i, 430.
boiler-maker's, i, 429.
cotter or keyway, i, 446.
flat, errors in grinding, i, 443.
flat, for drilling machines, i, 442.
flat, for lathe work, i, 280.
for deep drilling, i, 429.
for wood work, i, 279.
regulating speed, i, 429.
square-shanked, i, 446.
disadvantages of, i, 446.
sensitive, with friction disk, i, 429.
stock, with spiral grooves, i, 445.
twist, diametral clearance of, i, 274.
fluting, ii, 29.
front rake of, i, 275; ii, 44.
grinding by hand, i, 279.
large, grinding, ii, 44.
speeds and feeds for, i, 277.
universal beam, i, 431.
Driver, and face plate, i, 223.
Drivers, equalizing, i, 223.
for bolt heads, i, 224.
coned work, i, 225.
lathe mandrels or arbors, i, 227.
steady rest work, i, 225.
threaded work, i, 225.
wood, i, 225.
lathe, i, 222.
the elements, i, 223.
Driving cones, steps of, i, 162–164.
drills, flexible shaft for, i, 458.
gear for milling machine, ii, 15.
gear table, i, 404.
Drop, electric, ii, 513.
in cylinders, ii, 329.
very small, ii, 337.
Drum, winding, electric, ii, 511.
Duplex milling machine, ii, 7, 8, 9.
slide-rests, i, 143.
D-valve, ii, 230, 232.
Dynamos, ii, 507.
arc-light, 579, 610.
armature coils, removable, ii, 616.
automatic regulation, ii, 616.
brushes, moved, ii, 579.
circuit, interruption, ii, 616.
compound, in multiple, ii, 612.
compound wound, ii, 610.
direct, ii, 611.
connecting in parallel, ii, 612.
constant current, ii, 579.
disconnecting in multiple, ii, 613.
early history, ii, 579.
excitation, ii, 616.
field magnetism, ii, 579.
regulation, ii, 579.
reversing, compound wound, ii, 611.
running in parallel, ii, 613.
shunt wound direct, ii, 612.
shunt wound, ii, 610.
direct, ii, 611, 612.
speed of, altering, during run, ii, 338.
starting, ii, 616.
two in multiple, ii, 612.
Dynamotor, ii, 579.

E

Eccentrics, fixed and shifting, ii, 376, 410.
absence of, ii, 377.
position at cut-off, ii, 240.
slipping, ii, 317, 435.
turning in the lathe, i, 317.
Eccentric work, lathe mandrels, i, 229.
Economy of steam in engines, ii, 226.
Eddy currents, ii, 523, 564, 572.
Electrical energy obtained, ii, 507.
units, ii, 512.
relation between, ii, 512.
alternators, ii, 507.
bipolar machines, ii, 514.
current, developing, ii, 508, 512.
conveying, ii, 509, 574.
course of, ii, 509.
direction of, ii, 508.
lighting engines, governing, ii, 301, 302.
multipolar machines, ii, 514.
power absorbed, ii, 507.
transformers, ii, 507.
Electricity and Electric Machinery, Chap. XLIV., ii, 507.
Electric motors, ii, 540.
adjustment of brushes, ii, 526, 527.
attached to shafting, ii, 542.
breakdowns, ii, 609.
brushes and brush holders, ii, 525, 530, 534, 609, 621.
burning out insulation, ii, 545.
care of, ii, 608.
circuit breaker, ii, 620, 621, 624.
compound wound, ii, 615.
connections, ii, 609.
constant speed, ii, 540, 573.
covering of, ii, 546.
dampness, ii, 616.
dimensions of, ii, 633.
dimensions of standard, ii, 633.
direct connected, ii, 541, 550–556.
advantages, ii, 550.
disadvantage, ii, 556.
with boilermaker's punch, ii, 556.
with boring mill, ii, 556.
with crane, ii, 573.
with drill press, ii, 556.
with engine lathe, ii, 556.
with fan blower, ii, 555.
with line shafting, ii, 573.
with paper cutter, ii, 555.
with printing press, ii, 555.
with pump, ii, 573.
with turbine shaft, ii, 560.
with ventilating fan, ii, 550.
eddy currents, ii, 572.
elevator motors, ii, 549.
brake, ii, 550.
car switch, ii, 550.
controlling, ii, 550.
drum type, ii, 550.
reversing switch, ii, 550.
safety, ii, 550.
screw and sheaves, ii, 550.
shunt wound, ii, 550.
equalizing load, ii, 609.
erecting, ii, 616.
examination of, ii, 547.
excessive current, ii, 545.
excluding oil, ii, 547.
formed coils, ii, 547.
foundation, ii, 616.
four-pole, ii, 547.
high power, low velocity, ii, 542.
increase of load, ii, 545.
induction, ii, 572.
insulation, ii, 609, 616.
iron-clad, ii, 541.
leveling and lining up, ii, 616.
loss of power, ii, 541.
mechanical regulation, ii, 540.
motor-dynamos, ii, 579.
mounting on ways, ii, 542.
multipolar, ii, 541.
oiling, ii, 609.
overload, ii, 609.
power delivered by, ii, 541.
principles of operation, ii, 542.
protection, ii, 545.
pull, ii, 542, 543.
railway, ii, 545.
controllers, ii, 549.
controlling handle, ii, 549.
cutting out one motor, ii, 549.
gearing of, ii, 548.
horse-power of, ii, 548.
reversing handle, ii, 549.
starting resistance, ii, 548.
suspension springs, ii, 548.
two for each car, ii, 548.
two brushes only, ii, 547.
reaction of forces, ii, 543.
regulating, ii, 540.
regulation of governors, ii, 274.
relation to generators, ii, 540, 541.
resistance, ii, 512, 543, 544, 546, 573, 574.
reversed polarity, ii, 609.
reversing compound wound, ii, 614, 615.
reversing series wound, ii, 614.
reversing shunt wound, ii, 614.
room, ii, 609.
rotating field, ii, 570, 571.
rotation, velocity of, ii, 572.
running, ii, 621.

Electric motors, self-regulating, ii, 540.
series wound, ii, 545, 547, 614, 615.
shunt wound, ii, 614, 615.
shutting down, ii, 620, 621.
speed regulation, ii, 621.
speed, variation of, ii, 570.
starter, ii, 544, 586.
contacts, ii, 544.
overload, ii, 545, 587.
plain, ii, 545.
resistance, ii, 544.
self acting, ii, 587.
underload, ii, 545, 586.
wires, ii, 544.
starting a motor, ii, 543, 574, 610, 616, 619, 621.
synchronous, ii, 568.
temperature, ii, 616.
twisting of the field, ii, 543.
variable speed, ii, 540, 573.
velocities, ii, 568.
ventilation, ii, 616.
winding, ii, 512, 540, 573.
Electric tables, ii, 633.
motors, dimensions of, ii, 633.
wire, current capacity of, ii, 633.
wire, resistance of, ii, 633.
Electric wires. (See wires.)
Electro-motive force, induced, ii, 512.
Electro magnet, defined, ii, 508.
Elevating slide rests, i, 124, 168.
Elevator motors, ii, 550.
Elliptical gears, tooth curves of, i, 73.
gear wheels, i, 70.
gears, the pitch lines of, i, 70.
taps, in cross section, i, 109.
E. M. F., ii, 512.
Emery cutter grinder, ii, 45, 48.
adaptation to fine teeth, ii, 51.
cautions about clearance, ii, 51.
compound swivel head, ii, 51.
method of using, ii, 46.
work done on, ii, 48-50.
Emery machines, grinding, ii, 40.
universal, i, 196.
with revolving emery wheel, ii, 40.
Emery paper, use on lathe work, i, 308.
Emery wheel arbors, i, 192.
positions of, ii, 35.
Emery wheels, balancing, ii, 39.
cements used in the manufacture of, ii, 38.
clearance of, ii, 39.
cleaning, ii, 47.
coarseness and fineness of, ii, 38.
grade of, ii, 47.
positions of, i, 282; ii, 36, 37.
qualifications of, ii, 38.
recessed, ii, 48.
shapes and sizes, i, 195.
speeds of, ii, 39.
truing and grinding, i, 195.
wear of, ii, 48.
End, face and twin milling, ii, 25.
grain wood boring, i, 453.
measurements of lathe work, i, 376.
milling, advantages of, ii, 25.
thrust of angular teeth, i, 69.
Endless screw thread, cutting, i, 62.
Energy obtained, ii, 507.
Engine, absence of slide or piston valves, ii, 336.
alignment, errors in, ii, 166.
Ames' Iron Works, ii, 304.
automatic cut-off, ii, 277-283.
expansion, ii, 229.
Ball, ii, 376.
Buckeye, ii, 366-374.
calculating the power of, ii, 439.
compound, ii, 327-377.
connecting rods, ii, 407.
constant load, kind for, ii, 226.
coupled, ii, 227.
Corliss valve, setting, ii, 318, 319.
crank turning, i, 247.
crosshead turning, i, 252.
crossheads, ii, 407.
cylinder covers, turning, i, 318.
cylinders, bores of, ii, 404.
boring lathe for, i, 219.
clearance in, ii, 404-436.
counterbore of, ii, 404.
eccentrics, ii, 410.
fitting, ii, 158.
jacketed, ii, 406.
lagging, ii, 406.
lubricating, ii, 405.
relief valve for, ii, 405.
steam ports, ii, 405.
turning a cover, i, 318.
waste water cocks of, ii, 405.
wear of, ii, 404.
determination of power, ii, 229.
double, single, or triple, ii, 340.
drainage, automatic, ii, 338.
D-valve, ii, 230-232.
economy of steam, ii, 226.
form, adaptation of, ii, 227.
glands, turning, i, 316.
governors, ii, 267-277, 312.
guide bars, ii, 407.
setting, ii, 162.
spring of, ii, 162.
testing, ii, 163.
high speed, ii, 304-307, 376.
kind for, ii, 226.
horizontal, ii, 227.
lathe, i, 123, 147.
construction of carriage, i, 137.
of the back gear, i, 135.
of the bearings, i, 134.
Engine lathe, construction of the head stock, i, 134.
general construction of, i, 123.
lead screw and change wheels of, i, 139.
shears of, i, 134.
link motion, ii, 321-325, 421.
McIntosh Seymour, ii, 377.
Peache's high speed, ii, 376.
piston speed, ii, 228.
plain slide valve, starting, ii, 416.
pumping, ii, 355-366.
Raworth, high speed, ii, 336-339.
relative to steam pressure, ii, 226.
reversing duty, kind for, ii, 226.
safety, kind for, ii, 226.
self contained, ii, 228.
side crank or side hitch, ii, 227.
slide valves, ii, 230.
speed, high and low, ii, 348, 360, 372.
Stearns Mfg. Co., ii, 308-314.
Straight Line, ii, 349.
tandem, ii, 227.
throttle valve gears, ii, 229.
throttling, ii, 230.
transmission of power, kind for, ii, 227.
trial test, ii, 365, 366, 377.
triple expansion, ii, 376.
valves, ii, 408-410.
balanced, ii, 246, 409.
circular, ii, 409.
cut-off, ii, 410.
double ported, ii, 409.
exhaust lap of, ii, 408.
lap, ii, 234, 235.
lead of, ii, 408.
motions, diagrams of, ii, 235, 238.
point of admission, ii, 408.
racing and hunting, ii, 347.
setting, ii, 314-320.
slide and piston, ii, 410.
slide, designing, ii, 412.
steam distribution, ii, 235, 244.
tandem compound, ii, 327.
testing horse-power of, ii, 440.
the Allen, ii, 409.
the D, ii, 408.
tracing the action of, ii, 408.
travel, ii, 373.
Webb's, ii, 409.
variable duty, kind for, ii, 226.
vertical, ii, 227.
Willans central valve, ii, 339-348.
working under less than normal load, ii, 345.
Engines, breakdowns of, ii, 377-381.
compound, ii, 327-377, 466, 467.
donkey, ii, 474.
heating and knocking of, ii, 164.
selection of, ii, 226-228.
subject to freezing, ii, 418.
Engineers, test questions for, ii, 637.
Epicycloidal gear teeth, curves, i, 8.
teeth, the strength of, i, 64.
filleting the roots of, i, 53.
Equalizing drivers for lathe work, i, 223.
points of cut-off, ii, 240, 251-254.
Erecting, ii, 137.
a lathe, ii, 181.
an iron planer, ii, 179.
electrical machines, ii, 616.
pipe work, ii, 143.
the framework of machinery, ii, 176.
Errors in alignment, ii, 158-167.
in chucking, i, 250.
crank pin alignment, ii, 169.
cutting threads on taper work, i, 324.
cutting up inside chasers, i, 337.
drill-grinding machines, ii, 41.
grinding flat drills, i, 443.
grinding milling cutters, ii, 32.
jigs, limits of, i, 439.
shafting couplings, ii, 196.
Evaporation, ii, 497.
Evaporative efficiency of boilers, ii, 398.
Examining a boiler, ii, 400.
a crank shaft, ii, 345.
a governor, ii, 347.
a locomotive, ii, 433.
a piston, ii, 345.
crank pin brasses, ii, 345.
cut-off sleeves, ii, 347.
Excessive lead of engines, ii, 453.
Exhaust lap, ii, 408.
closing, ii, 267.
port, supplementary, ii, 337.
Expanding bit, i, 454.
chucks for lathes, i, 188.
for ring work, i, 241.
for large work, i, 228.
laps, i, 311.
mandrels, i, 227.
taps, i, 107.
Expansion, ii, 376, 408.
cock, ii, 499.
coil, ii, 498.
curve of indicator, ii, 262, 449, 450.
free, losses, ii, 333.
gear, variable, ii, 346.
governing, ii, 295-300.
testing of indicator, ii, 449, 450.
joint, ii, 141.
line of diagrams, ii, 446, 447.
of steam, ii, 443.
pulleys, ii, 200.
system, refrigeration, ii, 498.
valves, separate, ii, 247, 260, 475.
wastefulness of, ii, 332.
Experiments on the strength of the parts of a hide, ii, 208.
with governors, ii, 270, 271.
Extension lathe, i, 151.

F

Face and taper cutters, fixture, ii, 34.
cutters, ii, 17.
advantages of, ii, 18.
disadvantages of, ii, 18.
fixtures for, ii, 34.
milling, advantages of, ii, 26.
length of feed, ii, 26.
plate, clamping work on, i, 245.
clamps, i, 245.
errors in, and their effects, i, 243.
for milling machine, ii, 9.
for wood-work, i, 247.
work, examples of, i, 249.
movable dogs for, i, 250.
Facets of scrapers, angles for, ii, 97.
Facing and countersink cutters, i, 449.
cutters, i, 449.
rests, boring lathe with, i, 220.
tool with reamer pin, i, 449.
Facing tools or knife tools, i, 262.
Factors of safety, boiler seams, ii, 387.
Faraday's experiments, ii, 508.
Fastening cogs, i, 63.
pulleys to their shafts, ii, 201.
Feathers and their applications, i, 116.
methods of securing, ii, 102.
sinking into shafts, ii, 101.
Feed, direction, for shank cutters, ii, 20.
for spiral grooves, ii, 27.
escape valve, ii, 473.
gear, i, 197.
for screw machine, i, 205.
in cutting spiral grooves, ii, 28.
length, in face milling, ii, 26.
mechanism, i, 409.
motions, automatic, i, 407.
construction of, i, 390.
examples of, i, 170, 171.
for boiler-maker's drilling and turning machine, i, 436.
boring machine, i, 432.
boring mills, i, 205.
cam turning, i, 326.
car-axle lathe, i, 148.
carriage or saddle, i, 137.
chucking lathe, i, 150.
drilling machine, i, 432.
grinding lathe, i, 200.
milling machine, ii, 13.
planer heads, i, 413.
reversing traverse, i, 168.
special lathe, i, 146.
wood-working, i, 209.
friction wheels for, i, 78.
lathe, i, 126.
nut, position of, i, 177.
ratchet, i, 173.
regulators for screw cutting, i, 172.
spindle bearings, i, 139.
spindle for lathe, i, 139.
spindle, giving motion to, i, 135.
water, heating, ii, 363, 402.
Feed pump, steam supply, ii, 355.
Feeds, cutting, for wrought iron, i, 294.
for roughing cuts, i, 306.
for twist drills, i, 277.
Feed-water, ii, 402.
from natural supply, ii, 419.
Fiddle drill with feeding device, i, 455.
Field circuit, opening, ii, 621.
coils, continuous current, ii, 559.
exciter, ii, 559, 562.
internal, ii, 517.
magnet, ii, 508.
magnetism, ii, 567.
regulators, ii, 586, 588.
material, 588.
revolving, ii, 560.
tube for boilers, ii, 491.
winding, ii, 512.
Fifth wheel, forging of, ii, 239.
File cutting, ii, 101.
teeth, shapes of, ii, 85.
Files, ii, 85.
bent, using, ii, 93.
cleaning of, ii, 94.
cross, ii, 91.
cut of, ii, 86.
flat, sizes and kinds, ii, 86, 87.
for soft metals, ii, 95.
Groubet, ii, 87.
half-round, ii, 90.
instruction on holding, ii, 92.
knife, ii, 91.
names of, ii, 88.
putting handles on, ii, 92.
reaper, ii, 91.
resharpening, ii, 95.
round, ii, 90.
selection of, ii, 91.
thin, ii, 93.
three square, ii, 90.
tumbler, ii, 91.
warping, ii, 93.
Filing bolt heads, ii, 105.
cross, ii, 93.
draw, ii, 93.
fixture for lathes, i, 189.
lathe work, i, 308.
nuts, ii, 105.
out connecting rod keyways, ii, 120.
out round corners, ii, 95.
pins, ii, 105.
Filing, pins, blocks for, ii, 104.
the link slot, template for, ii, 127.
Filleting the roots of gear teeth, i, 53
Finishing cast iron with water, i, 307.
cast iron work, specks in, i, 307.
cuts, rates of feeds for, i, 307.
internal work, laps for, i, 311.
lathe work, scrapers for, i, 307.
Fire cleaning, ii, 401.
cleaning tools, ii, 401.
engine boiler tubes, ii, 463.
engine heaters, ii, 464, 465.
engines, steering gear for, i, 75.
Firing boilers, ii, 400.
methods of, 434.
Firmer chisels, ii, 272.
Fits, shrinkage or contraction, i, 366.
Fitting brasses to connecting rod straps, ii, 121.
brasses to journals, ii, 146.
engine cylinders, ii, 158.
keys, ii, 107.
keys, examples of, ii, 107.
straps, ii, 120.
taper pins, i, 122.
taper work, i, 313.
the keys and gibs, ii, 120.
up connecting rods, ii, 118.
a double eye, ii, 103.
a fork end connecting rod, ii, 123.
a lathe, ii, 181.
a link motion, ii, 127.
Fixed pins, i, 122.
Fixture for grinding cutters, ii, 32, 33.
for grinding taper work, ii, 33.
Fixtures for drilling machines, ii, 471.
Flank contact of gear teeth, i, 18.
Flat drill holders, i, 281.
drills, drilling with, i, 444.
errors in grinding, i, 443, 444.
for lathe work, i, 280.
files, sizes and kinds, ii. 86, 87.
guideways for planer beds, i, 414.
side lathe shears, i, 183.
turret lathe, i, 155.
Flexible shaft for driving drills, i, 458.
Flue boiler, ii, 390.
Flutes, shapes of taps, i, 105.
the number of, i, 107.
Fluting twist drills, ii, 29.
Fluxes, heating in, ii, 494.
Fly ball governors, ii, 416.
cutters, ii, 21.
holders for, ii, 22.
making, ii, 21.
methods of originating, ii, 21.
wheel, ii, 229, 379.
Follower rests, i, 234.
Foot block carrying cutting tool, i, 151.
Foot lathe, i, 130.
Foot stock, side centre for, ii, 8.
Foot valves, ii, 420.
Forge lathe, i, 153.
Fork end connecting rod, fitting, ii, 123.
aligning, ii, 124.
Former of Corliss bevel gear-wheel engine, i, 45.
Form of lead screw-threads, i, 177.
worm to give a period of rest, i, 74.
Formed coil winding, ii, 515, 547.
Formed coils, soldered in, ii, 516.
Forms of lathe shears, i, 183.
of outside calipers, i, 360.
pin wrenches, i, 126.
riveted joint, ii, 384.
taps, i, 102.
templates for gear teeth, i, 44.
wrenches, i, 125.
Foundations for an iron planer, ii, 179
for electrical machinery, ii, 607.
Four-jawed chucks, i, 237.
Four-spindle drilling machine, i, 434.
Fractional pitch change gears, i, 34.
Frames of machinery, erecting, ii. 176.
Freezing, preventing an engine from, ii, 418.
French gear-cutting machine, ii, 56-61.
Friction clutches, i, 409; ii, 192.
disks, drive steam regulator, ii, 360
experiments on, ii, 154.
of jamb dies, i, 98.
plane surfaces, ii, 135.
slide valves, ii, 475.
taper taps, i, 103.
tap threads, i, 108.
wheels, i, 77.
for feed motion, i, 78.
materials for, i, 77.
paper, i, 78.
to reduce journal strain, i, 79.
Front rake of twist drills, ii, 44.
tools for brass work, i, 264.
rake and clearance of, i, 254.
Fuses, safety, ii, 584, 624.

G

Galvanized iron, gauge for, i, 387.
Gang or composite cutters, ii, 23.
Gap, or break lathe, i, 151, 154.
Gas pipe, dies for, i, 101.
Gauge cocks for boiler, ii, 400.
Gauges, i, 356-359.
adjustable, i, 377.
for American sheet zinc, i, 387.
cutting tools, i, 92.
galvanized iron, i, 387.
lathe work, i, 359.
music wire, i, 386.
planer tools, i, 423.

Gauges for planing V-guideways, i, 421.
Russian sheet iron, i, 387.
setting over taper work, i, 313.
shrinkage fits, i, 367.
threading tools, i, 266.
forms of laps for, i, 310.
hexagon, i, 381.
instrument, standard, i, 96.
notch wire, i, 384.
plug and collar, comparing, i, 356.
screw thread, producing, i, 92.
standard for taper work, i, 316.
standard, comparing, i, 356.
surface, i, 378.
vacuum, i, 444.
wire, i, 387.
Gauging the pitch of threads, after hardening, i, 108.
Gear cutter, automatic, ii, 53, 59, 61, 67.
adjustments, ii, 60.
cutting engine, i, 36.
engine, vertical spindle, ii, 54.
machine, half automatic, ii, 54.
machine, French, ii, 54-59.
table of index holes for, i, 417.
indicator, use of, ii, 60.
racks, i, 77.
spur, ii, 59.
Geared scroll chuck, i, 235.
Gearing, McCord's new, i, 36.
Gear shaping machine, ii, 67, 68.
Gear teeth, i, 73.
approximate methods of cutting, ii, 64.
arc of approaching contact, i, 16.
of receding contact, i, 16.
pitch of, i, 2.
bevel, designing and cutting, ii, 61, 62, 63.
axles of, ii, 61.
centring the cut, ii, 63.
forms and sizes, ii, 62.
rounding, ii, 62.
calculating strength of, i, 65.
chord pitch of, i, 2.
curve of, for bevel gear, i, 22.
curves, templates for rolling, i, 43.
cutters, choice of, ii, 62.
cutters bisected, i, 36.
cutting by hand, i, 62.
cutting several at once, ii, 60.
cutting templates for, i, 35.
depth or height of, i, 1.
diameters of bevel, ii, 61.
elliptical, i, 70.
errors produced by wear, i, 18.
faces of, i, 1.
factors of safety for, i, 64.
flank contact of, i, 18.
depth or height, i, 1.
flanks of, i, 1.
forms of template for, i, 44.
generating involute curves, i, 31.
helical, i, 69.
line of centres of, i, 2.
planers, ii, 64.
wearing of the tool, ii, 64.
pitch line of, i, 2.
point of, i, 2.
requirements of curves, i, 7.
revolving cutters for, i, 37.
rolling and sliding motion of, i, 16.
curves for, i, 43.
strength of, i, 65.
table of cutters for, i, 41.
variation of curve, i, 12.
of shape, i, 16.
Gear wheels, i, 1.
angular velocity of, i, 6.
bevel, i, 21.
drawing for built-up, i, 61.
pinion, drawings for, i, 59.
calculating revolutions of, i, 5.
chord pitch, i, 3.
cogged, i, 63.
cogs, i, 67.
durability of, i, 66.
diameters of pitch circles of, i, 4.
drawings for, i, 59.
driver and follower, i, 3.
for rapid increase of motion, i, 75.
reciprocating motion, i, 77.
reversing motion, i, 75.
steering steam fire engines, i, 75.
variable motion, i, 74.
generating curves for, i, 11.
hunting tooth in, i, 7.
interchangeable gearing, i, 16.
internal, compared with spur, i, 25.
or annular, i, 23 to 27.
making cogs for, i, 63.
mortised, i, 63.
motion at a right angle, i, 69.
patterns, i, 54-61.
power of, ii, 406.
transmitted by, i, 5.
scale for dimensions, i, 52.
skew bevel, i, 61.
spacing teeth on, i, 58.
spiral, ii, 65, 66, 67.
stop motion of, i, 7.
strength of, i, 66.
table giving strength of, i, 67.
table of pitches, i, 3.
thickness of, i, 66.
tracing path of contact, i, 13.
value of cutters, table, i, 41.
various applications of, i, 74.
velocity of, uniform, i, 16.
with dovetail teeth, i, 60.
involute teeth, i, 31-34.
Gear wheels, with stepped teeth, i, 69.
Gear-worm or endless screw, i, 62.
Gears, for screw cutting, i, 320.
Generating the involute curve, i, 31.
curves, machine for, i, 36.
electric current, ii, 513.
Generators, electric, 507, 524.
adjusting controller, ii, 628.
advantage, ii, 563.
alternators, ii, 610.
armature, ii, 525.
as motors, ii, 567.
becomes a motor, ii, 540.
breakdowns, ii, 609.
brushes of, ii, 525, 526, 609, 621, 626, 628.
capacity, increase of, ii, 526.
care of, ii, 608.
changing direction, ii, 622, 626.
circuit breaker, ii, 620, 621, 624.
commutator of, ii, 525, 527, 624.
connection, ii, 630.
connection with engine, ii, 539.
connections, ii, 609.
current capacity, ii, 526.
current frequency, ii, 567.
current maintained, ii, 627.
cutting out one, ii, 609.
designs for, ii, 525.
diagram, ii, 624.
double, ii, 534.
eddy currents, ii, 564.
electric, ii, 507, 524.
equalizing load, ii, 609.
erecting, ii, 616, 625.
exciting the field, ii, 562, 622.
failure of one, ii, 609.
for high voltage, ii, 566.
for slow velocities, ii, 563.
foundation, ii, 616, 625.
four-pole, ii, 527.
fourteen-pole, ii, 527.
induction, ii, 560-567.
insulating, ii, 563, 607, 609, 616, 626.
insulation, ii, 609.
internal field, ii, 525.
large, direct connected, ii, 530, 567.
leveling and lining up, ii, 616.
load, ii, 625.
low voltage, ii, 527.
moisture, ii, 616.
multicircuit device, ii, 625.
multipolar, ii, 558, 567, 624.
oil pump, ii, 630, 631.
oiling, ii, 609.
operating in multiple, ii, 620.
overload, ii, 609.
poles, ii, 526.
potential, ii, 625.
railway power, ii, 539.
regulator, ii, 631.
regulator under commutator, ii, 627.
resistance, ii, 624.
reversed polarity, ii, 609.
revolving field, ii, 560.
room, ii, 609.
shunt circuit, ii, 621.
shutting down, ii, 620.
single phase, ii, 558, 562.
six-pole, ii, 527.
small, for dwellings, ii, 539.
small, with high speed, ii, 532.
starting, ii, 607, 616, 619, 629, 632.
switch, ii, 609, 630.
temperature, ii, 616.
three-phaser, ii, 558.
two-phaser, ii, 558.
uses of, ii, 507.
ventilation, ii, 616.
vertical, ii, 532.
wide commutator, ii, 527.
winding of armature, ii, 527.
German bit, i, 452.
Gibbed elevating slide-rest, i, 169.
Gimlet bit, i, 452.
Gland, access to, ii, 376.
packing, ii, 348.
Globe valve, lathe for dressing, i, 152.
Gonzenback's cut-off valve, ii, 410.
Gouge, use of, i, 338.
Governing by throttling and expansion, ii, 295-300.
dynamo engines, ii, 302.
electric engines, ii, 301-304.
high pressure valve, ii, 338.
mill engines, ii, 304.
Governors, ii, 267, 277, 312.
adjustment, spring, ii, 276.
balls, ii, 319, 348.
centrifugal, ii, 345.
controlling slide valve, ii, 273.
dancing, ii, 416.
dash pot in, ii, 269, 377.
details of, ii, 439.
electrical regulation, ii, 274.
experiments with, ii, 270, 271.
fly ball or throttling, ii, 416.
for automatic engines, ii, 459, 460.
for stationary engines, ii, 457, 458.
isochronal, ii, 416.
link expansion gear, ii, 272.
piston throttle, ii, 269.
Porter's, ii, 268.
Proell's, ii, 268.
qualifications of, ii, 268.
Richardson's, ii, 268.
safety stop, ii, 277.
Sawyer's valve for, ii, 416.
shaft, ii, 271, 283-294.
speed of, ii, 416.
speeders for, ii, 416.
Governors, spring, adjustment of, ii, 418.
watts, ii, 268.
Grades of emery wheels, ii, 38.
Graduations of planer heads, i, 413.
Grain side of leather, weakness, ii, 208.
Grate bars, cleaning, ii, 400.
Graver, i, 330.
Gridiron crosswise valve, ii, 377.
Grinding clamps for lathe work, i, 311.
cocks and plugs, ii, 145.
end mills, ii, 46.
formed cutters, ii, 47.
lathes, special chucks for, i, 197.
machines, speed of work, i, 195.
operations, ii, 38.
taper cutters, ii, 33.
taper work, i, 313.
teeth of reamers, i, 282.
teeth of spiral cutters, ii, 36.
thin cutters, ii, 33.
twist drills by hand, i, 279.
universal, i, 195.
use of water, i, 196.
with elevating rest, i, 194.
Grinding-lathes, i, 193.
for calender rolls, i, 199.
construction of tailstock, i, 200.
special chuck for, i, 196.
universal, i, 192, 194.
Grinding-machine, drill, ii, 41.
for milling cutters, ii, 32.
errors in construction, ii, 41.
universal, i, 196.
Groove cams, i, 84.
proper construction of, i, 84.
wear of, i, 84.
Groove, with double roller, i, 84.
Groove cutting, angular cutters, ii, 27.
Grooved friction wheels, wear of, i, 79.
Grooves, producing different shapes with same cutter, ii, 29, 30.
right and left hand, ii, 29.
Groubet files, ii, 87.
Ground detector, ii, 596.
finding, ii, 622.
joint, ii, 137.
Guide bars, ii, 407.
setting by stretched lines, ii, 163.
pulleys for belts, ii, 211.
for centre punches, i, 301.
Guideways, flat, i, 414.
planing, i, 422.
Gumming or gulleting, ii, 290.

H

Hack saw, ii, 97.
Half-round bit for true work, i, 281.
for wrought iron or steel, i, 281.
or pot auger, i, 281.
reamers, ii, 99.
with adjustable cutter, i, 281.
Hammer, ii, 72.
eyes, shapes of, ii, 72.
handles, putting in, ii, 72.
machinists' hand, ii, 72.
paning or pening, ii, 72.
Hand bolt threading machine, i, 97.
device for straightening lathe work, i, 305.
drilling machine, i, 459.
finishing tool, i, 331.
hammers, machinists', ii, 72.
lathe, i, 130.
watch manufacturers', i, 191.
milling machine, ii, 1.
planer, i, 391.
reamers, ii, 98.
shaping machine, i, 391.
side tools, i, 331.
tools for brass-work, i, 332.
round nosed, for iron, i, 331.
screw cutting, i, 96.
threading machine, head, i, 465.
turning, i, 330.
vise, ii, 104.
Handles of files, putting in, ii, 92.
of hammers, putting in, ii, 72.
Hangers, shafting, forms of, ii, 192.
wall, ii, 194.
Hardening, case, ii, 128, 442.
outside, ii, 494.
saws, ii, 494.
to resist wear, ii, 492.
increase elasticity, ii, 492.
provide a cutting edge, ii, 492.
Hard metal, drilling, i, 444.
Head boring, i, 288.
with nut feed, i, 291.
Heads, construction of, i, 413.
of the rapid machines, i, 468.
planer, feed motions for, i, 414.
V-guideways for, i, 414.
Headstock lathe, construction, i, 153.
of engine lathes, i, 134.
grinding lathes, i, 200.
special lathe, i, 144.
spindle, i, 194.
Heat, ii, 442.
carried, ii, 497.
conversion of, into work, ii, 443.
latent, ii, 442.
radiation of, ii, 444.
Heaters for fire engines, ii, 464, 465.
Heating and knocking, ii, 164.
feed-water, ii, 402.
showing the causes of, ii, 168.
Heating circuits, condensation in, ii, 357.
Heavy oil for hot bearings, ii, 418.
Heel tool, i, 330.
Height of vise jaws, i, 62.
Helical teeth, cutting in the lathe, i, 69.
Herring-bone gear teeth, i, 69.
Hexagon gauge, i, 381.
Hide, parts of, used for belting, ii, 208.
High efficiency pressure steam engine, ii, 404.
speed automatic engines, ii, 304-307, 459.
of valve gear, ii, 359.
High pressure cylinders, ii, 335.
cut-off, ii, 358.
valve, governed, ii, 338.
Hobbing dies, methods of, i, 473.
Hob for threading dies, i, 474.
Hobs and their uses, i, 335.
for cutting up dies, i, 99.
threading dies, i, 474.
Hoe, ii, 401.
Hoisting machines, ii, 550.
Holders, for chasers, i, 268.
for fly cutters, ii, 22.
octagon boring tools, i, 175.
Holding chisels, ii, 74.
Hollow work, centres for, i, 226.
Hood-travel, ii, 353.
Hook bolts, i, 113.
Hooks, belt, ii, 216.
Horizontal boring machine, i, 433.
chucking machine, i, 154.
tubular boiler, ii, 393-398.
Horse-power, from diagram, ii, 450.
of an engine, calculating, ii, 439-451.
testing, ii, 440.
Hot box, cause of, ii, 619.
Hydraulic fits, allowance for, i, 365.
fits, parallel holes and taper plugs for, i, 365.
pressure, i, 366.
Hypocycloidal curves, i, 8.

I

Ice making, Chap. XLIII., ii, 497-506.
ammonia charge, ii, 502.
ammonia storage tank, ii, 500.
brine tank, ii, 503.
cakes, weight of, ii, 503.
releasing from cans, ii, 504
can system, ii, 504.
cans, ii, 503.
chest, a refrigerator, ii, 497.
chill room, ii, 499.
circulating medium, ii, 497.
compressor, ii, 499, 501.
condenser, ii, 499, 500.
cooling disks, ii, 499.
expansion cock, ii, 499.
expansion coil, ii, 498.
from distilled water, ii, 504.
making clear ice, ii, 504.
oil cooler, ii, 499.
plate system, ii, 504.
purifying steam, ii, 504.
purifying water for, ii, 504.
removing plates, ii, 505.
slow freezing, ii, 504.
snowy ice, ii, 504.
tank room, ii, 504.
time required, ii, 503.
Inclination of skew bevel teeth, i, 61.
Index plate of milling machine, ii, 7.
Index wheel, originating, i, 342, 353.
Indicator, ii, 445.
attachment of, to engine, ii, 448.
cards, ii, 319.
diagram, area of the, ii, 451.
diagrams, ii, 446.
defective, ii, 453.
expansion curve, ii, 449, 450.
springs, ii, 448.
vacuum line, ii, 447.
Injector, feed, ii, 402.
for locomotives, ii, 427.
Inside calipers, i, 360.
chasers, i, 335.
errors in cutting up, i, 337.
Inspection of electrical machinery, ii, 606.
Insulation, ii, 505, 607, 608, 609, 610, 616, 626.
armature, ii, 519, 522, 563.
best materials, ii, 519.
burning out, ii, 545.
double, refrigeration, ii, 505.
materials, ii, 519.
of coils, ii, 516, 519.
of commutator, ii, 509.
triple, refrigeration, ii, 505.
waterproofing, ii, 519.
weak, ii, 519.
Interchangeable gearing, i, 16.
Intermediate cylinders, ii, 335.
Intermediate gears, i, 3.
Intermediate wheels, i, 319.
rolling circle, i, 24.
Internal gear wheels, i, 23-27.
fields, ii, 517.
strains in cast iron work, i, 306.
threading tools, i, 264.
wheels, i, 23.
Involute curves for gear teeth, i, 8.
teeth, advantages of, i, 34.
Iron and steel, galvanized, gauge for, i, 387.
Iron planer, erecting an, ii, 179.
foundation for, ii, 180.

Irregular forms, lathes for, i, 210.
motion, cams for, i, 80.
work, turning, i, 326.
Isochronal governors, ii, 416.

J

Jacket action, ii, 360.
draining pump, ii, 363.
Jacketed cylinders, ii, 406.
Jacketing, steam, ii, 355.
Jam dies, i, 98.
nuts, i, 119.
Jewellers' rests for lathes, i, 189.
Jigs, designing, i, 440.
errors in, limit of, i, 439.
for cutting out steam ports, i, 441.
drilling engine cylinders, i, 440.
drilling machines, i, 439.
simple work, i, 440.
Joints, boiler fitting, ii, 140.
butt, boiler, ii, 384.
cylinder cover, ii, 137.
easily removable, ii, 141.
expansion, ii, 140.
for boiler work, ii, 384.
rough surfaces, ii, 138.
gauze, ii, 138.
ground, ii, 137.
lap, boiler, ii, 384.
open, for wear, ii, 121.
riveted, proportioning, ii, 387, 388.
rubber, ii, 129.
rust or caulked, ii, 141.
scraped, ii, 137.
thimble, ii, 141.
to withstand great heat, ii, 138
water, ii, 138.
Joule's equivalent, ii, 443.

K

Key seating machines, i, 460.
Key seats, cutting, ii, 101.
Keys and gibs, fitting, ii, 120.
bearing surfaces of, i, 115.
draught of, i, 116.
forms of, i, 115.
of cocks, lathe for turning, i, 152.
seating rule, i, 378; ii, 101.
with set-screws, i, 115.
Keyway calipers, i, 363.
cutting machine, ii, 68-71.
Keyways, cutting by hand, ii, 101, 108.
cutting out by drifts, ii, 109.
Kilowatt, ii, 593.
meter, ii, 598.
Knife files, ii, 91.
Knives, moulding, scale for shapes of, ii, 83.
Knock-off cam, ii, 353.
Knurling tool, improved forms of, i, 328.

L

Laminations of armatures, ii, 523.
Lamps, arc. (See arc lamps.)
Lap-joint, boiler, ii, 384.
of Corliss engine valve, ii, 458.
winding, ii, 516.
Latent heat, ii, 442.
Lathe, advantages of, i, 119, 122.
accurate grinding on, i, 194.
adjustable gap, i, 154.
adjustment to one two-thousandths of an inch, i, 194.
apron, i, 138.
feed motion for, i, 168.
automatic feeds, i, 128.
back gear, i, 144.
back rest, i, 196.
bench, i, 120.
boring devices for, i, 288.
tools, shapes of, i, 285.
break, i, 151.
care and use of lathe, i, 195.
carriage, i, 145.
feed motion for, i, 137.
testing, ii, 182.
to discontinue traverse, i, 170.
to lock, i, 170.
carriers, i, 222.
centre drilling attachment, i, 300.
centre rest, i, 194.
centres, i, 290.
removing, i, 159.
shapes of, i, 299.
testing, i, 298.
change wheels for, i, 139.
chucks for, i, 188.
for irregular pieces, i, 157.
for grinding thin saws, i, 194.
chucking for boring purposes, i, 151.
simple form of, i, 154.
clamps, i, 223.
classification of, i, 119.
combination turret, i, 154.
construction, i, 124.
cutting fractional threads on, i, 181.
helical teeth in the, i, 69.
screws in the, i, 319.
cutting-off machine, i, 193.
cylinder boring, i, 219.
dogs, various kinds of simple, i, 222.
self tightening, i, 223.
double axle, i, 154.
dressing for globe valves, i, 152.
drivers, i, 222.
Lathe, engine, i, 123.
English chucking, i, 149, 150.
effect of change of temperature, i, 196.
elevating rest, i, 124.
erecting a, ii, 180.
extension, i, 151.
face-plates, i, 243.
chucking, i, 246.
clamps for, i, 245.
errors in, i, 143.
for wood work, i, 247.
feed-motions, i, 126, 144, 170, 171.
feed-screw, i, 175.
feed, spindle for, i, 139.
filing, fixtures for, i, 189.
finishing cone pulleys, i, 160.
fit of the live spindle of a, i, 157.
fitting up, ii, 180.
flat turret, i, 155.
follow rest, i, 196.
foot, i, 119.
footstock spring tension, i, 194.
for axe handles, i, 210.
dressing hexagons, i, 152.
engine cylinders, i, 219.
facing and boring cylinders, i, 219.
irregular forms, i, 210.
taper turning, i, 142.
turning cock keys, i, 152.
turning wheel hubs, i, 221.
forge, i, 153.
forming monitor, i, 152.
gap, i, 151, 154.
grinding, i, 192.
universal, i, 192, 194, 196.
hand, i, 120, 151.
headstock spindle, i, 194.
hexagonal turrets, i, 159.
importance and advantages of, i, 119.
internal grinding fixture, i, 195.
jewellers', rest for, i, 189.
locking spindles of, i, 186.
lead-screw, i, 168, 175.
bearings for, i, 139.
nuts for, i, 140.
supporting long, i, 176.
mandrels, drivers for, i, 227.
expanding, i, 227.
for eccentric work, i, 229.
nuts, i, 229.
threaded work, i, 228.
tubular work, i, 227.
forms of, i, 229.
with expanding cones, i, 228.
with expanding pieces, i, 228.
monitor, forming, i, 152.
two speeds, i, 153.
motions for turning cams, i, 326.
open spindle, tailstocks for, i, 189.
pattern makers', i, 148, 160.
pit, i, 153.
power, i, 120.
pulley, i, 150.
quartering machine, i, 219.
rests, i, 196, 197.
screws, errors of pitch, i, 79.
screw cutting, i, 152, 160.
screw slotting, i, 191.
self-acting, English, i, 148.
set over, i, 151.
shears, the legs of, i, 184.
various forms of, i, 133, 183.
methods of ribbing, i, 184.
or beds, i, 182.
with flat sides, i, 183.
V and flat slides, i, 183.
V slides, i, 183.
shoes for rests, i, 197.
sizes of, i, 120.
slide-rest for, i, 121, 145, 170, 171.
for spherical work, i, 123.
improved features of, i, 122.
screw cutting features, i, 152, 157.
special chucks for, i, 190, 197.
star feed, i, 172.
stop motion, i, 153.
surfacing, i, 153.
swing frames, i, 168.
hand and drilling, i, 151.
swivel head, i, 152.
tailblock, i, 185.
methods of testing, i, 187.
rapid spindle motion, i, 185.
releasing devices, i, 185.
setting over, for tapers, i, 136.
wear of the spindles of, i, 185,
taper turning attachments, i, 126, 129, 157, 160.
testing, i, 186.
instruments for, ii, 182.
tool-holders for outside work, i, 270.
with clamp, i, 271.
tools, angle of clearance of, i, 257.
height of, i, 260.
shapes of, i, 254.
triple geared, i, 153.
truing and mounting emery wheels, i, 195.
turret, combination, i, 154
two speeds, i, 153.
universal grinding, i, 102.
vertical boring and turning, i, 221.
watchmakers', i, 188.
water, use of, i, 196.
with compound slide-rest, i, 140-143.
flat chucking surface, i, 143.
rapid spindle motion, i, 185.
sliding heads, i, 290.
Lathe, with variable speed, i, 191.
wooden bed, i, 149.
work, boring tools for, i, 285.
burnishing, i, 311.
chisels for, i, 339.
countersinks for, i, 302.
end measurements of, i, 376.
filing, i, 308.
flat drills for, i, 280.
holders for, i, 281.
forms of countersink for, i, 302.
gauge for, i, 359.
grinding clamps for, i, 311.
holding straps for, i, 244.
mandrels or arbors for, i, 227.
method of polishing, i, 308.
polishing clamps for, i, 311.
side tools for, i, 261.
technical terms used in, i, 296.
use of emery paper on, i, 308.
Lead-lined brasses, ii, 149, 418.
Lead of a valve, adjusting the, ii, 418.
Lead of slide valves, ii, 408.
Lead-screw, bearings for, i, 139.
conveying motion to the, i, 168.
for lathes, i, 175.
forms of treads of, i, 177.
long supporting, i, 176.
nuts, i, 180.
swing frame for, i, 139.
with three threads per inch, i, 177.
five threads per inch, i, 178.
Leather, grain side, weak, ii, 208.
Left-hand threads, cutting, i, 322.
Leg vise with parallel motion, ii, 63.
Lever feed drilling machine, i, 428.
drilling, for blacksmiths, i, 457.
principles of, ii, 437.
Lift and force pumps, ii, 419.
Lightning arresters, ii, 589-593, 624.
for various currents, ii, 589, 592.
principle of action, ii, 593.
resistance, 591, 592.
Line of contact of skew bevel gear wheels, i, 61.
Line shafts, couplings for, ii, 194.
Line shafting, diameters of, ii, 189.
ordinary, ii, 186.
setting in line, ii, 184, 185.
sizes of, ii, 186.
the strength of, ii, 189.
Lined boxes, babbitt metal, ii, 155.
Lines of electrical force, ii, 575.
Lining connecting rod brasses, ii, 126.
Link-motion, gear, ii, 321-325, 415.
fitting up, ii, 127.
for expansion engines, ii, 460.
for marine engines, ii, 475.
quick return shaper, i, 399.
setting the valves for, ii, 415.
spring counterbalance, ii, 324.
the action of, ii, 415.
with one eccentric, ii, 324.
Link slot, templates for filing, ii, 127.
Lip drill, i, 443.
Live centres, tapers for, i, 159.
spindle, fit of, i, 162.
wear of bearings, i, 162.
Liquid air, ii, 506.
Locking, differential threads for, i, 119.
Lock work, drilling device for, i, 459.
Locomotive ash pan, ii, 422.
automatic air brake, 422-430.
axle boxes, ii, 147.
eccentrics, forward and backward, ii, 318.
eccentrics, slip of, ii, 317.
blower, ii, 422.
boiler and frames, ii, 421.
connecting-rod, ii, 116.
freight engine, ii, 421-436.
injector, ii, 427.
link motion, ii, 423-425.
passenger engine, ii, 422.
reversing gear, ii, 423.
safety and pop valves, ii, 421.
sand valves, ii, 422.
valves, setting, ii, 320.
Locomotive yoke and guide bars, ii, 421.
Longevity of lubricants, ii, 153.
Lost motion in valve setting, ii, 174, 315.
in connecting rods, ii, 315.
Low speed engines, water in boilers of, ii, 402.
Low pressure cylinder, ii, 330.
Lubricants, longevity of, ii, 153.
qualities of, ii, 152.
testing, ii, 152.
Lubricators, automatic, ii, 344.
steam, ii, 472.

M

Machine centre drilling, i, 300.
Machinists' chisels, application, ii, 76.
hand hammers, ii, 72.
Magnet, electro, defined, ii, 508.
loop, ii, 508.
force, lines of, ii, 508.
Magnetism, ii, 507, 508, 567.
of the field, exciting, ii, 508, 570.
Main bearings, adjusting, ii, 418.
valve, ii, 366, 372.
pressure on its seat, ii, 367, 369.
Mandrels, expanding, i, 227.
for threaded work, i, 228.
lathe, i, 227.
expanding, i, 228.
for eccentric work, i, 229.
for nuts, forms of, i, 229.
with expanding cones, i, 228.
Mandrels, lathe, with expanded pieces, i, 228.
or arbors for lathe work, i, 227.
Mangle gearing, various forms of, i, 76.
Manufacturers' temper, ii, 492.
Marine-engine boilers, ii, 468, 469.
connecting rod, ii, 116.
link motion, ii, 472.
pumps, ii, 468.
valves, ii, 476.
Marine engines, pipes of, ii, 477.
various, ii, 466.
Mariotte's law, ii, 443.
Matched cutters, ii, 23.
Mean effective steam pressure, ii, 452.
Measurements, the standards of, in various countries, i, 341.
Measuring by sight, and feeling, i, 348.
electric, ii, 593.
machine for sheet metal, i, 348.
for pitches of threads, i, 96.
special, i, 342-346, 348.
microscopic, i, 348.
threads, method of, i, 95.
tools, classification of, i, 354.
valve lead, ii, 173.
work, temperature for, i, 305.
Mechanical equivalent of heat, ii, 443.
powers, ii, 437.
refrigeration, Chap. XLIII., ii, 497.
Metal, soft, files for, ii, 95.
Metric pitch screws, i, 322.
Meyer's cut-off valve, ii, 248, 257, 410.
Micrometer caliper, i, 354.
gauge for thread angles, i, 91.
Mill boring, i, 211.
turning, i, 211.
Milling-cutters, grinding, ii, 32.
or mills, ii, 16.
with inserted teeth, ii, 24.
Milling-machine, ii, 1-16.
advantages of, ii, 1.
attachments for, ii, 6, 7.
automatic feed motion, ii, 3-6.
chucks for, ii, 31.
cam cutting attachment, ii, 12.
chasers, i, 158.
construction of spindle, ii, 2-5.
cutters, ii, 17-31.
double-spindle, ii, 16.
driving disk for, ii, 9.
duplex, ii, 7, 8, 9.
face plate for, ii, 9.
fixtures for, ii, 10.
footstock, ii, 6.
hand, ii, 1.
head for spiral cutting, ii, 12.
holding work on, ii, 30.
index plates and table for gear cutting, ii, 3-6.
open side, ii, 10.
power, ii, 2.
resistance of strain, ii, 9.
rotary vise for, ii, 10.
side centre for footstock, ii, 8.
strength of bed, ii, 9.
table and saddle, ii, 3-6.
traversing, ii, 9.
universal, i, 438; ii, 2, 4, 8, 9, 12, 15.
head and back centre, ii, 10.
head for gear cutting, ii, 11.
vertical, ii, 8, 31.
vertical, single spindle, open side, ii, 8.
vertical, two spindle, open side, ii, 8.
with vertical spindle, ii, 10.
Milling or knurling tools, i, 328.
Milling taper work, ii, 30.
Mitre wheels, i, 1.
Mortised gear-wheels, i, 63.
Motor, electric. (See Electric Motors.)
Moulding knives, scale for marking out the necessary shapes of, ii, 83.
Muffle, ii, 493.
Mule pulleys for belts, ii, 211.
Multipolar machines, ii, 514, 541.
connected in parallel, ii, 516.
Multiported valve, ii, 257.
Music wire, gauge for, i, 386.

N

Nail bit, i, 452.
Negative port, ii, 320.
Nose bit, i, 453.
Notch wire gauges, i, 384.
Number of cutters used for a train of wheels, i, 41.
of cutters on boring bars, i, 290.
of cutting edges on taps, i, 105.
of cutting edges on reamers, i, 282.
Nut-tapping machine, i, 475.
automatic socket for, i, 475.
rotary, i, 475.
three-spindle, i, 475.
Nuts, filing, ii, 105.
application of, i, 117.
check, i, 117.
slackening of, i, 118.
split, i, 118.

O

Odontograph, using, i, 47, 49.
Ohm, ii, 512.
Oil and lubrication, ii, 151.
cavities for brasses, ii, 150.
cooler, ii, 499.
groove or curved chisel, ii, 76.
for brasses, ii, 150.
heavy, for hot bearings, ii, 418

Oil test, Swiss, ii, 153.
Oiling apparatus, ii, 471-472.
devices for planer beds, i, 416.
true surfaces, ii, 135.
Oils, testing for acids, ii, 153.
testing for salts, ii, 153.
Open brasses, ii, 149.
sided shafting hangers, ii, 193.
spindle lathes, tailstocks for, i, 187.
Operation of motors, principles of, ii, 542.
Originating angles, screw threads, i, 92.
cams, i, 326.
fly cutters, ii, 21.
gear teeth, i, Chaps. I., II., III.
index wheels, i, 345.
surface plates, ii, 135.
templates for screw threads, i, 92.
Outside and inside chasers, i, 335.
calipers, making, ii, 105.
the various forms of, i, 360.
threads, starting, i, 338.

P

Packing a piston gland, ii, 348, 349.
rings, limited expansion, ii, 349.
Paddle wheels, ii, 476-477.
Paning or pening, ii, 72.
hammers, ii, 68.
Pantagraph engine for dressing the cutters for gear teeth, i, 38.
motions, ii, 449.
Paper friction wheel, i, 78.
Parallel cutters, grinding, ii, 32.
holes and taper plugs for hydraulic fits, i, 365.
rods, keys for, i, 128.
Paring chisels, ii, 271.
Patching broken frames, ii, 178.
Path of gear tooth contact, i, 13, 16.
Pattern lathe, brake for, i, 149.
slide-rest for, i, 149.
with wooden bed, i, 149.
Pattern-makers' lathe, i, 148.
pipe gauge, i, 379.
Patterns, brasses, proper shape for, ii, 132.
spacing gear-wheel teeth on, i, 58.
Pattern-wheel scale, i, 51.
Pening or paning, ii, 72.
Pillow-block, fitting brasses to, ii, 131.
for shafting, ii, 194.
Pinion bevel, drawings for, i, 59.
with dovetail teeth, i, 60.
Pins and their adjustment, i, 117.
filing, ii, 103.
Pipe cutters, ii, 142.
gauge, pattern-makers', i, 379.
threads, taper for, i, 95.
tongs, ii, 143.
vises, ii, 142.
work, erecting, ii, 144.
Pipe line service, ii, 502.
Pipe-threading by hand, i, 463.
by power, i, 463.
machine, i, 475-477.
machines, construction of, i, 463.
Piston, construction of, ii, 230.
examining, ii, 345.
position, ii, 238.
speed, ii, 228, 339.
valves, ii, 339, 410, 502.
Pit lathe, i, 153.
Pitch, alteration in hardening, i, 108.
circle, the diameter of, i, 1.
correcting the errors of, i, 109.
gauging the, after hardening, i, 108.
line of cams, i, 80.
lines of elliptical gear teeth, i, 70.
machine for measuring, i, 96.
number of teeth, and diameter, i, 68.
of gear wheels, scale for, i, 52.
of screw threads, i, 85.
scale for, i, 52.
Pivoted arms for tooth-templates, i, 44.
Plane blades, ii, 77.
blades, finding shapes of, for mouldings, ii, 78-83.
Planer beds, flat guideways for, i, 414.
beds, oiling devices for, i, 416.
chuck, for curved work, i, 420.
chucking halves of pulleys on, i, 423.
chucks, i, 419.
for spiral grooved work, i, 419.
clutches, friction, i, 409.
cones, abutment, i, 409.
driving arrangement, i, 408.
gear, ii, 64.
head slides, wear of, i, 412.
heads, feed motions for, i, 414.
graduations of, i, 390.
V-guideways for, i, 414.
increase of speed, i, 407.
or iron planing machine, i, 402.
shapers, reversing, i, 398, 399.
speed, i, 407.
swivel heads for, i, 412.
swivelling tool holder, i, 412.
tables, angle plates for, i, 418.
chucking devices for, i, 422.
chucking machine beds on, i, 421.
forms of bolts for, i, 417.
movement of, i, 407.
supplementary tables for, i, 417.
tool, aprons for, i, 413.
tool-holder, applications of, i, 425.
Planer tool-holder, examples of application of, i, 425.
simple form of, i, 426.
with tool post, i, 425.
tools for broad finishing feeds, i, 424.
clearance of, i, 424.
for slotted work, i, 424.
gauge for, i, 423.
shapes of, i, 424.
Plane surfaces, friction of, ii, 135.
Planet motion, i, 75.
Planimeter, ii, 452.
Planing curved work, i, 420.
guideways, i, 421.
Planing machine, i, 406-426.
countershafting, i, 409.
cutting strokes, i, 411.
feed mechanism, i, 409.
large, chucks for, i, 423.
motions of, i, 402.
open side, i, 411.
post, i, 411.
shifting mechanism, i, 410.
tables, i, 414.
tables, slots and holes in, i, 415.
transmitting and arresting motion, i, 410.
Plate couplings, ii, 196.
system of ice making, ii, 503.
Plates, angle, for planer tables, i, 418.
Plug and collar gauges, i, 357.
Plug gauges for threads, i, 91.
Plumb level, ii, 136.
rule, ii, 136.
Plunger pumps, ii, 402-419.
Point of compression, ii, 408.
cut off, ii, 408.
release, ii, 408.
Poker, ii, 401.
Polarity, analysis of, ii, 515.
of brushes, ii, 622.
Polishing clamps, i, 311.
Poppet valves, cylinder, ii, 357.
Pop piston for water clearance, ii, 349.
Port, negative or blind, ii, 320.
oblique trunk, ii, 346.
openings, diagrams of, ii, 372.
large, ii, 349.
supplementary exhaust, ii, 337.
Position of emery wheel, ii, 35-37.
of dies in bolt cutting, i, 473.
of taper pins for locking, i, 128.
Post drill, i, 431.
Potential indicator, ii, 596.
Pounding, the causes of, ii, 168.
Power drilling machine, i, 428.
delivered by motor, ii, 541.
lathes, i, 130.
loss of, ii, 541.
milling machine, i, 470.
of an engine, testing, ii, 440.
of waterfalls, transmitted, ii, 567.
threading machine, i, 465.
Powers, mechanical, ii, 437.
Pressure and volume of steam, ii, 443.
electric, raised gradually, ii, 566.
indicator, ii, 500.
main valve on its seat, ii, 367-369.
receiver, ii, 329.
Priming, its causes and prevention, ii, 402.
Profiling machine, ii, 31, 32.
Protractor, bevel, i, 380.
Propeller, screw, ii, 477.
Pulley balancing, device for, ii, 203.
boring machine, i, 438.
calculating speeds of, ii, 204.
considered as a lever, ii, 437.
crowned, ii, 201.
expansion, ii, 200.
lathe, i, 150.
self-oiling, ii, 200.
solid and split, ii, 200.
transmitting power of, ii, 204.
turning, i, 318.
turning, special lathe for, i, 211.
wood, ii, 200.
Pump air chambers, ii, 420.
capacity of, ii, 420.
chambers, ii, 363.
displacement, ii, 419.
plunger, ii, 419.
principles of action of, ii, 419.
valves and cages, ii, 363.
Pumping engine, ii, 355-366.
auxiliary, ii, 363.
Pumps, belt, ii, 420.
compressor for ammonia, ii, 498.
double acting, ii, 355, 419.
for circulating, ii, 355, 472.
for marine engines, ii, 468.
lift and force, ii, 419.
plungers, connection of, ii, 359.
regulating, ii, 420.
rotary, ii, 419.
single acting, ii, 419.

Q

Quadruple engine, ii, 351.
arranged as a pair of compound, ii, 351.
Quartering machine, i, 219, 434.
Questions for engineers, ii, 637.
for operators of electrical machinery, ii, 643.
Quick removal, bolts for, i, 116.
Quick-return motion, Whitworth's, i, 391, 401.
shapers, link motion for, i, 399.

R

Racing and hunting, ii, 347.
Rack and pinion wheel, i, 1.
cutting machine, ii, 59.
feed saw bench, ii, 301.
transformed into a cutting tool, i, 36.
Radial drilling machines, i, 430, 431.
Radiation of heat, ii, 444.
Railways, electric, engines for, ii, 539, 545.
Raised V-guideways, lathes with, i, 182.
Rake, ii, 401.
Ramsden's dividing engine, i, 349.
Rasps, kinds and cut of, ii, 87.
Ratchet brace, i, 457.
feeds, i, 173.
Rates of feed for finishing cuts, i, 307.
Reamers, adjustable, ii, 99.
chucking, i, 280.
chucking for true work, i, 283.
for framing, ii, 99.
grinding the teeth of, i, 282.
half round, ii, 99.
hand, ii, 98.
number of teeth for, i, 282.
rose-bit or rose, i, 283.
shell, i, 283.
shell-rose, i, 284.
spacing the teeth of, i, 282.
spiral teeth for, i, 282.
square, ii, 99.
taper, ii, 99.
Reamer-pin, with facing tool, i, 449.
Reamer-teeth, odd or even, i, 282.
spacing of, i, 282.
Reaper-files, ii, 91.
Reboring cylinders in place, ii, 160.
Receiver pressure, ii, 329.
Receivers, ii, 355, 357.
heating, ii, 355.
Recentring turned work, i, 304.
Reciprocating motion, gear for, i, 77.
Recording meters, ii, 598.
Red marking for vise work, ii, 96.
Reducing knife, i, 209.
Reduction of temper, ii, 493.
Refitting leaky cocks and plugs, ii, 144.
Refrigeration, Chap. XLIII., ii, 497.
absorption system, 502.
admission valves of compressor, ii, 501.
air cooled, ii, 497.
ammonia storage tank, ii, 500.
Baudelot cooler, ii, 499.
brine plant system, ii, 500.
tank, ii, 503.
chill room, ii, 499.
circulating medium, ii, 497.
compressor, ii, 499, 501.
valves, ii, 501.
condenser, ii, 499.
cooling disks, ii, 499.
direct expansion system, ii, 498.
evaporation, ii, 497.
expansion coil, ii, 498.
forcing vapor in condenser, ii, 500.
injecting oil in compressor, ii, 501.
insulation, ii, 505.
double, ii, 505.
freezing room, ii, 506.
materials, ii, 505.
south wall, ii, 505.
triple, ii, 505.
liquid air, ii, 506.
oil cooler, ii, 499.
oil, distribution of, ii, 502.
pipe line service, ii, 502.
piston valves, ii, 502.
proportion employed, ii, 503.
separating tank, ii, 500.
supplying ice water, ii, 503.
thermostat regulator, ii, 503.
Regulating pumps, ii, 420.
Regulator, ii, 586, 588.
centripetal action, ii, 374.
driven by friction disks, ii, 360.
forces, ratio of, ii, 373.
springs, auxiliary, ii, 373.
Relay cylinder, ii, 347.
Reheater, ii, 376.
Release, the point of, ii, 408.
Releasing devices, tailblock with, i, 185.
Relief valve, ii, 344, 473.
Removing corroded bolts, i, 122.
corroded nuts, i, 122.
featheredge, ii, 54.
keys, i, 116.
Repairing broken frames, ii, 178.
connecting rods, ii, 124.
Resharpening files, ii, 95.
Resistance, ii, 542, 543, 544, 546, 591, 592, 595.
Rests, follower, i, 234.
Return cams, designing, i, 82.
motions compared, i, 401.
Reverse keys, i, 116.
Reversible jawed chucks, i, 237.
Reversing gear, steam, ii, 325-327.
steam to aid the hand, ii, 325.
steam to wholly move gear, ii, 325.
modifications, ii, 326, 327.
Revolving cutters for gear teeth, i, 37.
Rheostat, ii, 588, 624.
Ribbing lathe shears, i, 184.
Right and left angular cutters, ii, 18.
and left hand cutters, ii, 18.
Ring work, expanding chucks for, i, 241.
winding, ii, 515.
Rivet diameters, ii, 388.
Riveting crank pins, ii, 73.
Riveted joints, forms of, ii, 384.
proportioning, ii, 386-382.
strength of, ii, 386.
unevenly spaced rivets, ii, 385.
Rivets, diagonal pitch of, ii, 385.
spacing of, ii, 385.
Rod-feed for screw machines, i, 206.
Rolling motion of gear teeth, i, 16, 27.
Rolling circles, by using two the pinion may contain but one tooth less than the wheel, i, 26.
circles for internal gearing, i, 25.
curves for gear teeth, i, 43.
Roll-turning lathe, i, 215.
lathe, tools for, i, 216.
calender, method of driving, i, 200.
Rose-bit or rose reamers, i, 283.
Rotary nut-tapping machine, i, 475.
converters, electrical, ii, 577.
planing machine, i, 395.
pumps, ii, 419.
Roughing cuts, feeds for, i, 306.
Rough surfaces, joints for, ii, 138.
Round corners, filing out, ii, 95.
files, using of, ii, 95.
half-round files, ii, 90.
three-square files, ii, 90.
Round-nosed chisels, ii, 75.
tools, i, 258.
Rule for computing threads, i, 95, 96.
for finding horse-power, ii, 450.
for locating pitch line of worm, i, 29.
for finding the chord pitch, diametral pitch, and arc pitch, i, 3.
for proportioning the steps of the driving cone, i, 159, 161.
Russian sheet iron, gauge for, i, 387.
Rust or caulked joints, ii, 140.

S

Safety devices for planer heads, i, 413.
fuses, ii, 584.
advantage of lead, ii, 585.
material, ii, 585.
principle of operation, ii, 584.
single and double pole, ii, 585.
stop motion for governors, ii, 277.
Safety-valve, the inspection of, ii, 400.
calculations for, ii, 441.
Sag of belts, ii, 210.
Salts and acids, testing oils for, ii, 153.
Sand-blast process, ii, 96.
Saturated steam, ii, 442.
Saw back, ii, 97.
machines, re-sawing band, ii, 310.
Saws, hardening, ii, 494.
stiffening, ii, 495.
Sawyer's valve for governors, ii, 416.
Scale for moulding knives, ii, 83.
for dimensions of gear wheels, i, 52.
for gear teeth, i, 52.
for pitch of gear wheels, i, 52.
of tooth proportions, i, 54.
Scouring commutator, ii, 567.
Scraped joint making, ii, 137.
Scrapers, angles for facets of, ii, 97.
applications of, i, 332.
for finishing, i, 307.
for true surfaces, ii, 97.
various forms of, ii, 97.
Scraping out cylinder heads, ii, 160.
Scrap iron, furnaces, ii, 247.
Screw-cutting, driver for, i, 223.
face plate for, i, 223.
feed regulators for, i, 171.
hand tools, i, 96.
machine, i, 157.
pitches, metric system, i, 322.
reversing tool traverse in, i, 168.
with hand tools, i, 334.
Screw-driver and shape, ii, 97.
Screw-machine, i, 153, 155.
box tools for, i, 208.
chuck for, i, 205.
cross-slide for, i, 205.
cutting lathe, i, 152.
feed gear for, i, 205.
cutting-off tool for, i, 208.
examples of use of, i, 203.
for heavy work, i, 201.
light work, i, 203, 204.
large capacity, i, 155.
or screw-making lathe, i, 200.
stop motion for, i, 206.
threading tool for, i, 208.
tool-holders and tools for, i, 202.
turret of, i, 205.
with special wire feed, i, 153, 206.
Screw-propeller, ii, 477.
Screw-slotting lathe, i, 191.
Screw-thread angles, gauge for, i, 91.
cutting tools, the wear of, i, 89.
standard forms of, i, 85, 86.
Screw-threads, alteration of shape, i, 89.
pitch of, i, 85.
requirements of, i, 86.
self-locking, i, 85.
tools for cutting, i, 87.
variation of pitch, i, 87.
Screws, i, 117.
belt, ii, 216.
differential, i, 118.
set, i, 117.
variation of pitch, i, 87.
Scroll chucks, i, 238.
chuck threads, wear of, i, 238.
Seams for boilers, forms of, ii, 384.
Securing feathers, methods of, i, 120.

Securing devices, nut, i, 120.
pins for exact adjustments, i, 121.
Segmental gear, breakage, ii, 380.
Segments, commutator, ii, 510, 521, 522.
Self-acting lathe, English form of, i, 148.
locking bolts, i, 117.
nuts, i, 85.
screw threads, i, 85.
Self-adjusting couplings, ii, 198.
Self-oiling pulleys, ii, 201.
Self-tightening lathe dog, i, 223.
Series, connection, ii, 516.
winding, ii, 512, 545.
proportion of coils, ii, 513
Set-screws, i, 115.
application to hubs, i, 127.
Setting angular grooving cutters, ii, 28.
double eccentric by lines, ii, 175.
connecting rod brasses, ii, 125.
Corliss valves, ii, 318, 319.
eccentrics on crank shafts, ii, 174.
engine cylinders, ii, 159.
engine guide bars, ii, 162.
engine valves, ii, 314–320.
guide bars by stretched line, ii, 163.
line shafting in line, ii, 184, 185.
locomotive slide-valves, ii, 412.
numbers and tabular values for odontograph, i, 50.
overtail stock to turn tapers, i, 312.
slide valves, ii, 173.
threading tools, i, 266.
up or aligning new engines, ii, 165.
up axle box wedges, ii, 436.
up keys of connecting rods, ii, 127.
valve of engine, ii, 314–318.
work after case hardening, ii, 129.
Settings for boilers. ii, 396.
Shaft bearings, hollow, ii, 377.
flexible, for driving drills, i, 459.
governors, ii, 271, 283–294, 377.
Shafting, collars for, ii, 189.
couplings, errors in, ii, 196.
hangers, open-sided, ii, 193.
various forms of, ii, 192.
pillow blocks for, ii, 194.
speeds for, ii, 190.
tests of, ii, 188.
turning, three-tool slide-rest, i, 143.
Shafts, sinking feathers in, ii, 101.
Shaking grate bars, ii, 401.
Shank cutters, ii, 19.
cutters, applications of, ii, 20.
feed for, ii, 20.
sizes of, ii, 21.
drill, improved form of, i, 446.
Shanks, drill, i, 445.
Shapes of boring bar cutters, i, 291.
of centres for large work, i, 299.
crowns of brasses, ii, 127.
cutting edges of chisels, ii, 74.
file teeth, ii, 85.
hammer eyes, ii, 72.
lathe boring tools, i, 285.
lathe tools, i, 254.
planer tools, i, 424.
Shaping-machines, i, 389–392, 397–402.
centres for, i, 397.
crank motions for, i, 401.
holding cylindrical working, i, 394.
holding taper work in, i, 394.
losing its position, i, 389.
or planer shaped, with tappet motion for reversing, i, 399.
quick return, i, 389.
quick return link motion, i, 399.
reversing mechanism, i, 393.
setting work in, i, 394.
tool holders, i, 394.
uniform speed, i, 402.
with travelling head, i, 397.
Shears, lathe, i, 182.
Sheet iron, gauge for, i, 387.
metal measuring machine for, i, 348.
zinc, gauge for, i, 387.
Shell reamers, i, 283.
reamers, arbor for, i, 283.
rose reamers, i, 284.
Shoes for lathe rests, i, 197.
Shrinkage fits, i, 366.
gauge for, i, 367.
of iron, i, 368, 374.
system at the royal gun factory at Woolwich, i, 367.
Shrinking work, to refit it, i, 374.
Shunt, circuit, ii, 621.
coils to reduce spark, ii, 629.
wound electrical machines, ii, 512, 550.
Side rake in lathe tools, i, 256.
tools for lathe work, i, 261.
Siphon, ii, 475.
Sizes of lathes, i, 130.
Skew bevel gear wheels, i, 61.
Slackening of nuts, i, 118.
Slice bar, ii, 401.
Slide, construction of, i, 390.
Slide-rest, American form of, i, 132.
compound tool-holder for, i, 174.
detachable, i, 143.
double tool holder for, i, 169.
English form of, i, 132.
for lathes, i, 131.
pattern lathe, i, 149.
special lathe, i, 145.
spherical work, i, 133.
weighted elevated, i, 171.
ribbed, elevating, i, 169.
various forms of, i, 132.
Slides of planes, construction of, i, 412.
of planer heads, wear of, i, 412.
Slide-valve, exhaust lap of, ii, 230, 408.
attachment for, ii, 378.
controlling, ii, 273.
construction of, ii, 376.
lead adjusting, ii, 418.
setting a, ii, 418–426.
squaring, ii, 418.
the Allen, ii, 409.
the D, ii, 408.
Webb's, ii, 409.
Slide-valves, balanced, ii, 409.
circular, ii, 409.
designing, ii, 412.
double ported, ii, 409.
steam lap of, ii, 408.
the lead of, ii, 408.
Sliding motion of gear teeth, i, 16, 27.
motion of worm-wheel teeth, i, 28.
Slots and holes in planing-machine tables, i, 417.
Slotted work, tools for, i, 424.
Slotting and paring machine, i, 460.
Slotting-machine, i, 459.
sectional view of, i, 460.
tool-holders, i, 460, 461.
tools, i, 461.
Snifting valve, ii, 472.
Socket wrench, i, 125.
Sockets, drill, i, 445.
Solenoid, electric, ii, 508.
Solid and split pulleys, ii, 200.
ended connecting rods, ii, 114.
tap wrenches, i, 110.
Spacing reamer teeth, i, 282; ii, 98.
rivets in boiler seams, ii, 385.
Sparking, ii, 608, 626.
causes and remedies, ii, 608, 616, 622.
evil results of, ii, 608.
length of spark, ii, 616, 630.
reduced by shunt coils, ii, 629.
Special sliding spindle-head chucks for watchmakers' lathes, i, 100.
forms of chucks, i, 241.
grinding lathe, i, 197.
index plate for gear cutting, ii, 7.
lathe for pulley turning, i, 211.
for wood working, i, 208.
for brass work, i, 216.
Specks in cast-iron work, i, 307.
Speeder and Sawyer valve, ii, 276.
Speeders for governors, ii, 416.
of automatic engines, ii, 459.
emery wheels, ii, 39.
governors, ii, 416.
grindstones, ii, 52.
pulleys, calculating, ii, 204.
shafting, ii, 190.
work on, i, 195.
Speeds and feeds for twist drills, i, 277.
for cutting wrought iron, i, 294.
Spherical work, slide-rest for, i, 123.
Spindles, live, with coned journals, i, 157.
various methods of locking, i, 186.
Spiral cutters, grinding teeth of, ii, 36.
feed in cutting, ii, 27.
grooves, drill stock with, i, 445.
planer chucks for, i, 419.
springs, winding in the lathe, i, 329.
teeth for reamers, i, 282.
Spiral gears, ii, 65–67.
Spirit levels, ii, 136.
Split nuts, i, 118.
Spoon bit, i, 452.
Spring adjustment of governors, ii, 416.
calipers, i, 360.
of engine guide-bars, ii, 162.
swages for blacksmiths, ii, 231.
Spring tools, i, 263.
Springs for indicators, ii, 448.
Spur wheel, annular, i, 23.
compared with annular, i, 32.
construction of pattern for, i, 54.
drivers, breaks of, ii, 379.
rim, breakage, ii, 380.
teeth, chipping of, ii, 380.
contact of, ii, 380.
number of, ii, 380.
proportions of, ii, 380.
Square-threads, clearance of tools in cutting, i, 269.
cutting, i, 269.
dies for finishing, i, 270.
worms to work with, i, 29.
Square work, steady rest for, i, 233.
bevel, i, 380.
centre, advantage of, i, 303.
various forms of, i, 303.
centring, i, 300.
holes, device for drilling, i, 450.
reamers, ii, 99.
shanked drills, i, 446.
the T, i, 379.
the try, i, 379.
Squaring a valve, ii, 315, 418.
Standard bar for the United States standard of measurement, i, 341.
amount of current, ii, 581.
for taper work, i, 316.
for wire, etc., i, 384.
gauges, diameter of work limits the application of, i, 363.
motors, dimensions of, ii, 633.
plug and collar gauges, i, 91.
screw threads, i, 91.
sizes of washers, i, 123.
taps, i, 104.
variations in, i, 341.
Standard cutters, ii, 17.
Starter, motor, ii, 544.
Starting a generator, ii, 607, 616, 619, 629, 632.
Starting a locomotive, ii, 432.
a slide valve engine, ii, 416.
arc lamp circuits, ii, 576.
electric motor, ii, 543, 574, 610, 616, 619, 621.
Stationary engine boilers, ii, 382, 403.
Steady-rest cat-head, i, 233.
clamps, i, 233.
for square and taper work, i, 232.
improved form of, i, 233.
or back rest, i, 231.
work, drivers for, i, 225.
Steam, ii, 442.
action on one side of each piston only, ii, 337.
admitted to indicator, ii, 446.
amount of, used in engines, ii, 452.
compression, ii, 262, 267.
condensation, ii, 265.
engine high pressure, ii, 404.
expansion of, ii, 264, 443.
fire engine, ii, 462, 463.
hammer forging, examples in, ii, 241.
jacketing, ii, 355.
laps of slide valves, ii, 408.
lubricators, ii, 476.
pipe thread, tapping machine, i, 477.
couplings, ii, 351.
pipes, dies for, i, 101.
ports, jigs for cutting out, ii, 463.
pressure absolute, ii, 348, 443.
mean effective, ii, 336.
reversing gear, ii, 325, 327, 422.
saturated, ii, 442.
superheated, ii, 442.
tight nuts, i, 118.
volume and pressure of, ii, 443.
waste, ii, 264.
wire drawing, ii, 261, 262.
weight of, ii, 445.
Steering gear for fire engines, i, 75.
Stepped connecting-rod straps, ii, 117.
reamers for taper work, i, 285.
Stiffening saws, ii, 495.
Stock, adjustable, i, 448.
Stocks and dies, i, 97, 101.
for drilling machines, i, 449.
forms of, i, 101.
Stone drill, i, 454.
Stop motion for gear wheels, i, 7.
for screw machines, i, 206.
lathe, i, 153.
Straight-edge and applications, i, 381.
Straightening lathe work, device for, i, 305.
machine for bar iron, i, 305.
wire, chuck for, i, 305.
work in the lathe, i, 304.
Straight-line engine, automatic, ii, 460.
important details of, ii, 461–462.
Strains on boiler shells, ii, 383.
Strap ended connecting rod, ii, 116.
Straps, connecting rod, ii, 115.
connecting rod, fitting, ii, 120.
Strength of boiler plate, ii, 382.
boiler shells, ii, 382.
gear-wheel cogs, i, 66.
gear-wheel teeth, i, 64.
line-shafting, ii, 190.
wire, experiments on the, i, 387.
Studs, i, 117.
Sun-and-planet motion, i, 75.
Superheated steam, ii, 442.
Supplementary planer tables, i, 417.
Surface condensers, ii, 472–474.
condensing engine valves, ii, 474.
Surface gauge, i, 378.
Surface plates, originating, i, 383; ii, 132.
Surfaces, rough, joints for, ii, 138.
true, scrapers for, ii, 97.
Surfacing lathe, i, 153.
Swing-frame, i, 158.
attaching, i, 169.
for lead screw, i, 139.
Switchboards, ii, 598.
connections, ii, 598.
convenience, ii, 601.
description, ii, 601.
dynamo bus, ii, 602.
equalizing bus, ii, 605.
location, ii, 607.
material, ii, 602.
street service bus, ii, 602.
3-wire system, ii, 603.
use of, ii, 601.
wire connections, ii, 607.
Switch, electric, ii, 585, 609, 625.
forms of, ii, 585, 586.
movement of, ii, 586.
Switches, types of, ii, 585, 586, 624.
Swivelled tool-holding devices, i, 413.
Swivelling vise chucks, i, 395.
vises, ii, 63.
Swivel head lathe, i, 152.
Swivel heads, construction of, i, 389.
for planers, i, 412.
Swivelling tool-rest, i, 174.

T

Table of arc and diametral pitches, i, 3.
change wheels, screw cutting, i, 180.
feeds for twist drills, i, 277.
index holes for gear cutting, ii, 7.
natural sines, i, 3.
of electric wire, ii, 633.
of wrought iron tubes, i, 95.
pitch-diameter, pitch, and number of teeth in gear-wheels, i, 68.
Table of pressure, temperature and volume of steam, ii, 399.
screw threads, i, 107.
sizes of, bolts and nuts, i, 114.
milling-machine cutters, ii, 17.
tapping drills, i, 445.
twist drills and shanks, i, 442.
speeds for twist drills, i, 277.
spring for indicators, ii, 448.
standard for the V-thread, i, 95.
Tabular valves and setting numbers for odontograph, i, 51.
Tail-block lathe, i, 185.
Tailstock, adjustments of, i, 245.
chucks, i, 135, 145.
construction of, i, 209.
for drilled work, i, 279.
engine lathe, i, 135.
open spindle lathes, i, 189.
securing and releasing, i, 136.
Tandem compound engine, ii, 327, 377.
Tangent screw, i, 1.
Tap-wrenches, adjustable, i, 110.
Taper-bolts, standards, i, 359.
cutters, fixtures for, ii, 34.
for pipe threads, i, 95.
grinding, ii, 33.
holes, device for drilling, i, 451.
milling, ii, 30.
pins, fitting, i, 128.
position for locking, i, 128.
plugs for hydraulic fits, i, 365.
reamers, ii, 99.
taps for blacksmiths, i, 106.
threads, cutting, i, 338.
turning attachments, i, 126, 129, 143, 157, 160.
feature, unusual, i, 154.
lathe, i, 126, 142.
Tapered connecting-rod ends, ii, 117
Taper-work, centres for, i, 226.
chucking, i, 394.
fitting, i, 313.
fixture for grinding, ii, 33.
gauge for setting over, i, 313.
grinding, i, 313.
keys, i, 115.
plug and collar gauges for, i, 357.
standard gauges for, i, 316.
steady rest for, i, 233.
stepped reamers for, i, 285.
turning, i, 126, 129, 312, 313.
wear of lathe centres in, i, 312.
Tapers for live centres, i, 159.
Tapping, i, 111.
device for drilling machines, i, 427.
drills, table of sizes of, i, 445.
machine for steam pipe thread, i, 477.
Taps, clearance on, i, 102.
collapsing, machine, i, 107.
for lead, i, 109.
for very straight holes, i, 109.
form of, i, 103, 104.
improved forms of, i, 103.
number of cutting edges, i, 106, 471.
taper, for blacksmiths, i, 106.
taper, the friction of, i, 102.
wear of, i, 89.
Technical terms in lathe work, i, 296.
Teeth, angular, end thrust of, i, 69.
angular or herring bone, i, 69.
cast, the contract of, i, 67.
curves of elliptical, i, 73.
file, shapes of, ii, 85.
gear-wheel factors of safety, i, 64.
for variable motion, i, 74.
requirements of curves, i, 7.
helical, i, 69.
reamer, number of, i, 282.
spacing of, ii, 98.
Temper, blacksmiths', ii, 492.
drawing the, ii, 494.
manufacturers', ii, 492.
reduction of, ii, 493.
Temperature for measurements, i, 305.
of work on lathes, i, 196.
Tempering, ii, 492–496.
color, ii, 492.
heating in fluxes, ii, 494.
methods of, special, ii, 493–496.
outside, ii, 495.
using a muffle, ii, 493.
warping in, ii, 493.
Template, ii, 110–112.
of Corliss bevel-gear engine, i, 45.
for curves, i, 384.
marking division lines on the face of a gear-wheel, i, 59.
filing a link slot, ii, 129.
gear teeth, i, 43, 44.
involute curves, i, 32.
planing teeth to shape, i, 54.
rolling gear-tooth curves, i, 43.
gauges for end measurements, i, 376.
Tension of belts, ii, 211.
Testing angle of bevel wheels while in the lathe, i, 60.
boilers, strength of, ii, 488.
engine alignment, ii, 166–172.
engine guide-bars, ii, 163.
indicator expansion curves, ii, 449.
lathe carriages, ii, 182.
lathe tail-block, i, 187.
lathes, i, 180, 181.
lines, ii, 582.
lubricants, ii, 152.
oils, ii, 153, 154.
shafting, ii, 188.
squares, various methods of, i, 379.

Testing the power of an engine, ii, 440.
various methods of, i, 187.
Test questions for engineers, ii, 637.
for operators of electrical machinery, ii, 643.
Theoretical compression curve, ii, 455.
diagram, ii, 449.
expansion curve, ii, 449, 450.
Thimble joints, ii, 141.
Thinning twist-drill points, ii, 44.
Thread angles, gauge for, i, 91.
cutting, i, 111.
avoiding friction in, i, 474.
dies, i, 97, 101.
taps, i, 102.
tools, angles of, i, 91.
wear of, i, 88.
pitch varied by hardening, i, 87.
screws, forms of, i, 85.
Threaded work, drivers for, i, 225.
Threading dies, cutting speeds for various sizes, i, 474.
dies, hob for, i, 474.
machine, hand bolt, i, 464.
hand revolving head, i, 465.
pipe, i, 463, 475-477.
power, i, 466.
tools, circular, i, 264, 267.
for gauges, i, 266.
screw machine, i, 203.
holders, i, 267.
internal, i, 264.
setting, i, 266.
the level of, i, 265.
Threads, diameter at the roots of, i, 269.
left-hand cutting, i, 322.
method of measuring, i, 95.
square, clearance of tools for, i, 269.
Three and four jawed chucks, i, 237.
Three-phaser, ii, 558.
Three-spindle drilling machine, i, 434.
nut tapping machine, i, 475.
Three-tool slide-rest for shafting, i, 143.
Three or four boring bar cutters, i, 290.
Throttle valve, adjusting, ii, 347.
leaky, ii, 418.
gears, ii, 229, 348.
Throttling engines, ii, 230.
and expansion governing, ii, 295-300.
Throttling governors, ii, 416.
Through keys and keyways, i, 116.
Thrust bearings, ii, 447.
on wheel shafts, i, 16.
Tit drill, i, 443.
Tool aprons for planers, i, 413.
edge, oilstoning, ii, 54.
facing with reamer pin, i, 449.
front for lathe work, i, 254.
holders, boring, i, 287.
combined, i, 273.
for compound slide-rests, i, 174.
circular cutters, i, 272.
octagon boring tools, i, 175.
screw machine, i, 202.
shaping machine, i, 394.
lathe for outside work, i, 270.
planer, i, 426.
slotting machine, i, 460, 461.
swivelled, i, 273.
threading, i, 267.
holding devices, i, 173.
swivelled for planers, i, 413.
rest, swivelling, i, 174.
taps, improved, i, 103.
Tools, caulking, ii, 141.
box for screw machine, i, 208.
circular cutting, i, 267.
cutting-off or grooving, i, 262.
cutting, the utmost duty of, i, 258.
diamond-pointed, i, 254.
facing or knife, i, 262.
for cutting rods in pieces, i, 305.
a worm in a lathe, i, 62.
screw threads, i, 87.
wood slips, ii, 271.
roll turning, i, 215.
screw machine, i, 202.
standard shapes, i, 111.
testing lathe centres, i, 298.
planer, clearance of, i, 424.
for coarse finishing feeds, i, 423.
slotted work, i, 424.
gauge for, i, 423.
shapes of, i, 423.
round-nosed, i, 258.
spring, i, 263.
square-nosed, i, 260.
thread-cutting, i, 97.
threading for screw machine, i, 264.
with side rake, i, 256.
Tooth form, variation of, i, 15.
proportions, scale of, i, 54.
Tooth templates, pivoted arms for, i, 44.
Trammelling connecting rods, ii, 122.
Trams or trammels, i, 377.
Transformers, ii, 567, 575.
construction of, ii, 577.
diagram, ii, 575.
inducing voltage, ii, 575.
primary current, ii, 575.
principle of action, ii, 575.
secondary current, ii, 575.
stationary, ii, 575.
step down, ii, 577.
step up, ii, 577.
use of, ii, 577.
voltage, ii, 575-577.
Transmitting power, electric, ii, 567.
Traversing milling machines, ii, 9.
spindle lathe, i, 218.
Triple expansion engine, ii, 468.
link motions of, ii, 470.
valves of, ii, 339.
geared lathe, i, 153.
riveted joints, ii, 385.
Tripod bearing, i, 156.
True plane, originating, ii, 132.
surfaces, oiling, ii, 135.
scrapers for, ii, 97.
Truing lathe centres, devices for, i, 297.
Trundle-wheels, i, 1.
Try-squares, i, 379.
T-squares, i, 379.
Tube plate cutters, i, 448.
Tubes, boiler, arrangement of, ii, 396.
bursted, ii, 435.
Tubular work, lathe mandrels for, i, 227.
Tumbler-files, ii, 91.
Turned work, recentring, i, 304.
Turning a cylinder cover, i, 318.
calender rolls, i, 215.
irregular shapes, i, 210.
machine, feed motions of, i, 436.
for boiler makers, i, 435.
mill, i, 211.
outside threads, i, 338.
pulleys, i, 318.
shafting, three-tool slide-rest, i, 143.
tapers, i, 136, 312.
Turret for screw machine, i, 205.
hexagonal, i, 159.
lathe, combination, i, 154.
lathe, two speeds, i, 153.
Twin cutters, ii, 18.
milling, advantages, ii, 25.
Twist drills, i, 274.
clearance of, i, 274; ii, 41-44.
effect of improper grinding, i, 276.
feeds and speeds for, i, 277.
fluting, ii, 29.
front rake of, i, 275; ii, 44.
grinding, i, 276.
large, thinning the points of, ii, 44.
table of sizes of, i, 442.
Twisting of electric field, ii, 543.
Two-jawed chucks, i, 236.
Two-phaser, ii, 558.

U

United States standard thread for gas pipe, i, 95.
for finished bolts and nuts, i, 113.
United States standard for rough bolts and nuts, i, 114.
for screw thread, i, 86.
Unpacking arc lamps, ii, 574.
Universal beam drill, i, 430.
boring, drilling and milling machine, i, 438.
chucks, i, 238.
coupling, ii, 199.
cutter and reamer grinder, ii, 48.
construction of, ii, 48.
method of using, ii, 48.
work done on, ii, 48, 50.
grinding lathes, i, 192, 194.
joint for drill brace, i, 456.
machine, i, 196.
milling-machines, ii, 2-15.
for heavy work, ii, 15.

V

Vacuum gauge, ii, 476.
line of indicator diagram, ii, 447.
Valve, cut-off, ii, 367, 369, 410.
action, ii, 233.
admission, of compressor, 501.
attachment to slide rod, ii, 349.
balanced, ii, 246.
Valve breaks, ii, 378.
controlling slide valve, ii, 273.
discharge, of compressor, ii, 501.
double exhaust, ii, 311.
double ported, ii, 242, 245.
edges, ii, 379.
examination of, ii, 378.
expansion, ii, 247, 260, 475.
for marine engines, ii, 476.
for triple expansion engines, ii, 471.
gear, ii, 355, 358.
gear, the Corliss, ii, 456.
globe, pattern for, ii, 281.
gridiron crosswise, ii, 377.
Kingston, ii, 472.
lap, ii, 234, 235.
lead adjusting, ii, 241, 418.
measuring, ii, 173, 316.
mechanism for operating, ii, 369.
Meyers, ii, 248.
motion, ii, 349, 353, 413.
motions, diagram of, ii, 235, 238.
multiported, ii, 257.
of surface condensing marine engines, ii, 474.
overtravel, ii, 237.
poppet, cylinder, ii, 357.
port openings, large, ii, 349.
Proell, ii, 376.
relief plate, ii, 308.
setting, ii, 314-320.
snifting, ii, 472.
spindle, hollow, ii, 370.
Speeder and Sawyer, ii, 276.
squaring a, ii, 315, 418.
steam distribution, ii, 235, 244.
stuffing-box, adjustable, ii, 312.
thin plate, ii, 349.
throttle freezing, ii, 418-419.
travel, ii, 373.
wear without leak, ii, 349.
Varying points of cut-off, ii, 254-262.
Velocity, uniform for gear wheels, i, 16.
Vertical boilers, ii, 391-393.
boring and turning machine, i, 221.
generators, ii, 532.
milling machine, ii, 31.
water tube boiler, ii, 392.
V-guideways for planer heads, i, 414.
Vibration, ii, 379.
Vise, ii, 72.
chucks, for vise work, i, 396.
chucking work in, i, 393.
construction of, i, 392.
holding taper work in, i, 394.
rapid motion, i, 396.
swivelling, i, 395.
various forms of, i, 394.
hand, ii, 104.
work, examples in, ii, 102-135.
red marking for, ii, 96.
Volt, ii, 512.
construction, ii, 594.
meter, ii, 593, 624.
principle of action, ii, 594.
Voltage, ii, 513, 516, 633.
automatic regulation, ii, 513.
drop, ii, 513.
high, ii, 567.
increase of, ii, 567, 621.
inducing, ii, 575.
loss of, ii, 578.
reduced, ii, 576, 621.
Volume and pressure of steam, ii, 443.
V-slide lathe shears, i, 182.
V-thread standard, i, 93.
V-tool for starting threads, i, 337.

W

Wall hangers, ii, 193.
Warping, ii, 493.
Warping of files, ii, 93.
Washers, i, 123.
standard sizes of, i, 123.
Watchmakers' lathes, i, 188.
Watch manufacturers' hand lathe, i, 191.
lathe, details of, i, 190.
Water, ii, 442.
clearance in engine, ii, 349.
discharge, ii, 369.
evaporation, calculation of, ii, 452.
gauge glass, ii, 400.
joints, ii, 139.
tube boiler, vertical, ii, 392.
Waterproofing insulation, ii, 519.
Watts, ii, 593.
Wattmeters, ii, 597.
Wave winding, ii, 516.
Wear of dies, i, 89.
back bearings, i, 158.
Wear of groove cams, i, 84.
nuts, i, 120.
planer head slides, i, 412.
scroll chuck threads, i, 238.
spindles of lathe tail-block, i, 185.
taps, i, 89.
worm and worm-wheel, i, 28.
upon grooved friction wheels, i, 79.
Weight of steam, ii, 443.
Weighted elevated slide-rest, i, 168.
slide-rest, feed motion for, i, 168.
Welded connecting rods, aligning, ii, 118.
Welding stub ends of connecting rods, ii, 118.
Wheel, emery, position of, ii, 35.
rack and pinion, i, 1.
rim, spacing the teeth on, i, 56, 58.
shafts thrust on, i, 16.
tire, throwing off, ii, 435.
worm, i, 1.
Wheels, bevel line of faces, i, 22.
clock, i, 21.
considered as levers, ii, 437.
emery, balancing, ii, 39.
grades of, ii, 39.
qualifications of, ii, 38.
speeds of, ii, 39.
work suitable for, ii, 39.
friction, i, 77.
Wheels, friction, material for, i, 77.
for transmitting motion, i, 21.
gear drawings for, i, 59.
intermediate, i, 319.
number of cutters for a train of, i, 39.
paddle, ii, 476.
trundle, i, 1.
White-metal lined boxes, ii, 155.
Width and thickness of chisels, ii, 74.
Winding armatures, ii, 510.
field, ii, 512.
formed coil, ii, 515.
lap, ii, 516.
ring, ii, 515.
series, ii, 512, 540.
shunt, ii, 512, 540.
spiral springs, i, 329.
strips and their use, i, 382.
three stages of, ii, 516.
wave, ii, 516.
Wire-drawing, steam, ii, 261, 262.
Wire-feed for screw machines, i, 206.
gauge, i, 387.
Wire, strength of, experiments on, i, 387.
Wires, electric, table of, ii, 633.
resistance of, ii, 633.
size of, for incandescent lamps, ii, 633.
Wood pulleys, ii, 200.
turning, hand tools for, i, 338.
work, counterbore for, i, 449.
drill for, i, 449.
drivers for, i, 225.
lathe, face plates for, i, 247.
twist drills for, i, 279.
Wood-working lathes, chucks for, i, 242.
special lathe for, i, 208.
Work, cored, drivers for, i, 225.
face plate, examples of, i, 249.
holding straps, i, 244.
hollow centres for, i, 226.
shrinking, to refit, i, 374.
Worm and worm-wheel, i, 28.
gears, i, 62; ii, 64.
circular pitch of, ii, 64.
wheel, application of, i, 30.
cutting teeth of, i, 42.
enveloping teeth, i, 28.
number of teeth in, i, 29.
sizing blanks, ii, 68.
teeth, sliding motion of, i, 28.
Worm to work with a square thread, i, 92.
Wrench, adjustable, i, 125.
for carriage bolts, i, 125.
jaws, angle for, i, 123.
monkey, i, 125.
pin, i, 126.
sockets, i, 125.
various forms of, i, 125.
Wrist plate adjusting, ii, 318.
Wrought iron, cutting speeds for, i, 294.

Y

Yoke and guide-bars, ii, 421.

Z
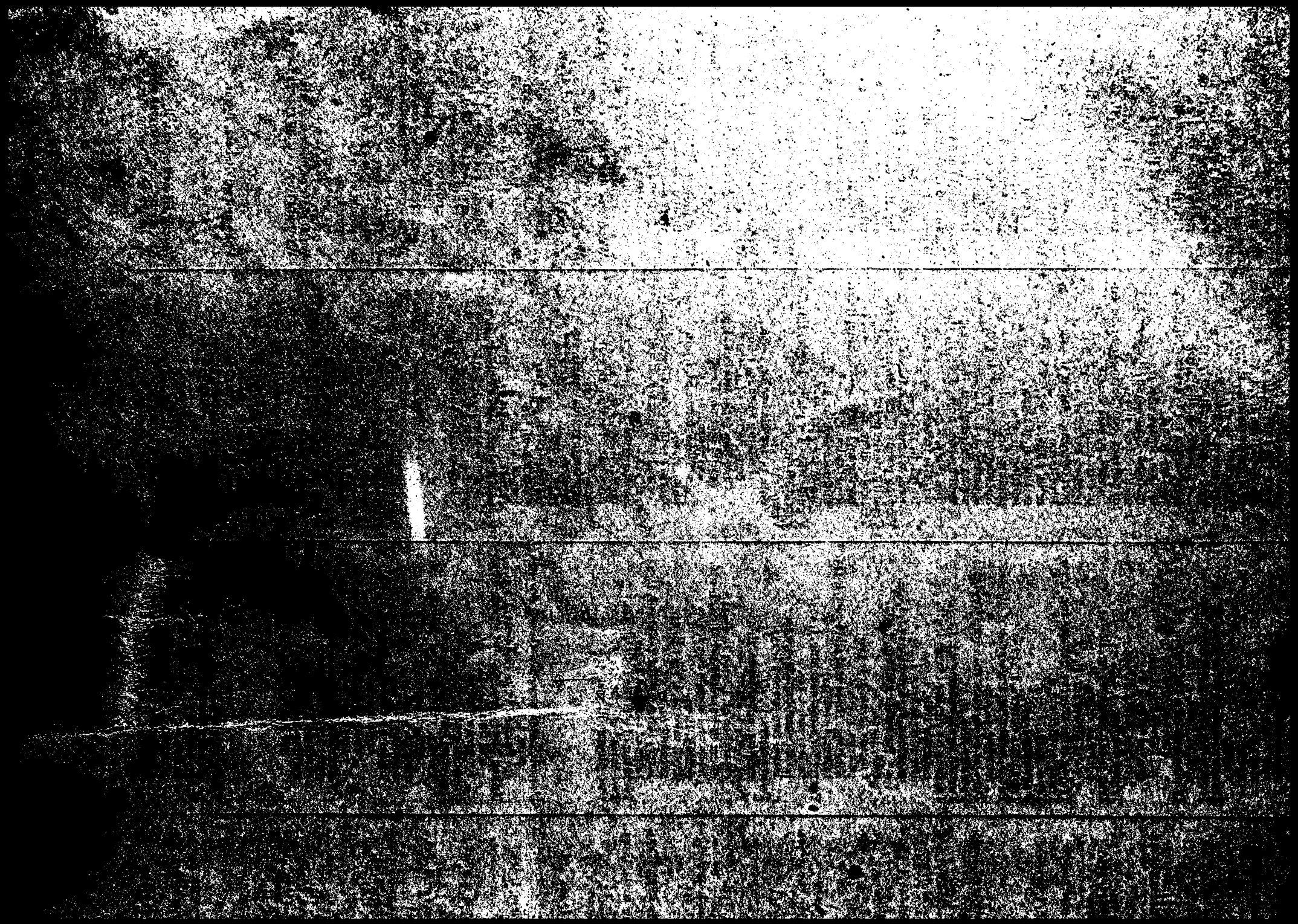
Zigzag riveted seams, ii, 384.
Zinc gauge, the American sheet, i, 387.
gauge, the Belgian sheet, i, 387.